NARROW-GAP IMPROVED ELECTROSLAG WELDING FOR BRIDGES

Krishna K. Verma [1]

Abstract

This paper describes an ongoing comprehensive research and development effort by the Federal Highway Administration to introduce Narrow-Gap Improved Electroslag Welding for Bridges for production welding. This new process provides a higher productivity rate, improved fracture toughness both in welds and heat-affected zones, and also much higher degree of freedom from fusion weld defects and cracking. The program objectives and the rationale for using the variations to the standard conventional electroslag welding process are also discussed.

Introduction

(Note: This paper is an updated version of a paper titled "Narrow-Gap Improved Electroslag Welding for Bridges," presented in Budapest, Hungary in 1996 at the 49th Annual Assembly of the International Institute of Welding (IIW), International Conference on Welded Structures.)

In the conventional electroslag welding (ESW) process, two vertically assembled plates are joined (Figure 1) by melting electrode wire, consumable guide, and the edges of the plates in a pool of molten flux (slag). The slag pool remains molten by heat generated by passage of electric current through molten conductive flux which melts the filler and base metals.

This paper describes an ongoing comprehensive research and development project as well as a technology demonstration effort by the United States Department of Transportation, Federal Highway Administration (FHWA) to introduce 'Narrow-Gap Improved Electroslag Welding for Bridges' for production welding. This project is designed to transfer this new technology, a variation of the conventional electroslag welding process (Figure 2), to State Departments of Transportation (State DOT's), bridge fabricators, contractors and others in the bridge industry. In the new process known as Narrow-Gap Improved Electroslag Welding Process (NGI-ESW process), (Figure 3), operating procedures and weld properties were significantly improved as a result of the initial phase of the FHWA research program that was

[1] Welding Engineer, Federal Highway Administration, Office of Bridge Technology, Washington, DC, USA

conducted by the Pacific Northwest Laboratory, Richland, Washington and the Oregon Graduate Institute of Science and Technology, Beaverton, Oregon (1).

Narrow-Gap Improved Electroslag Welding Process

Because of its high deposition rate, ESW is considered the most productive of any welding process in joining thick components. Initially when the process was introduced in the United States in the late 1960's, there was some obvious success. However, certain welding problems began to surface in terms of welding imperfections and inadequate properties, which led in 1977 to the FHWA placing a moratorium on the use of ESW for weldments on primary structural tension bridge members. This notice effectively eliminated the use of ESW not only in bridge fabrication but in various other United State's industries as well. In the 1980's, the FHWA launched comprehensive research and development effort in the area of ESW technology. The main objectives of the research program were to understand better the specifics of the ESW process and to advance the level of applied ESW technology. This new variation of the ESW process is called Narrow-Gap Improved Electroslag Welding Process (NGI-ESW). **This new process has resulted in higher productivity rate (higher welding speed), and improved fracture toughness both in welds and heat-affected-zones, and much higher degree of freedom from fusion weld defects and cracking.** The NGI-ESW process produces satisfactory welds and considerably improves Charpy V_notch (CVN) toughness because:

1. Relationships between welding variables, grain structure, microstructure, and toughness were better understood and controlled.

2. Tubular powder metal-cored wire and new types of consumable guides were introduced to reduce sensitivity to weld defects and improve microstructures.

3. Narrow-gap procedure was developed to reduce heat input and improve heat-affected-zone (HAZ) toughness.

4. Nickel-molybdenum alloy wire composition was developed to produce excellent weld toughness.

5. Excellent weld fatigue resistance is achieved.

NGI-ESW Field Trials and Demonstrations

The new NGI-ESW technique was subjected to extensive field testing prior to the initiation of the demonstration project. The scope of the field testing was limited to widely used bridge steels (American Society for Testing and Materials specifications A36, A572 and A588), 1-3 inch (25-75 mm) plate thicknesses, and the determination of Charpy V-notch toughness in the weld and in heat affected-zones. During the demonstration phase in 1994-95 which followed the field trials, the NGI-ESW technique was independently and successfully verified by BIRL (Basic Industrial Research Laboratory of the Northwestern University, Evanston, IL) for the FHWA under a contract. More demonstrations and test trials are

ongoing under a separate contract with the Oregon Graduate Institute of Science and Technology. These contracts required rebuilding the NGI-ESW equipment, making NGI-ESW welds, testing those welds both nondestructively and mechanically, and developing a package of documents (2, 3, 4 and 5) concerning technical, operational and contractual issues and training needs for NGI-ESW welding. Based on recommendations contained in the research report (1) from the Oregon Graduate Science and Technology Institute; and results of the field test trials of FHWA demonstrations, the said moratorium prohibiting electroslag welding has been rescinded (March 20, 2000) to allow NGI-ESW process for joining steel bridge members (6).

Program Objectives

The objectives of the demonstration project DP-102, Narrow-Gap Improved Electroslag Welding for Bridges, include the following:

1. *NGI-ESW Equipment and Materials Availability Verification.* An important task for acceptance of NGI-ESW is to ensure that the required equipment and materials and welding consumables be commercially available to users making production welds.

2. *Development of NGI-ESW Documentation.* A comprehensive package of specifications and guides required by the FHWA has been developed. The guides contain technical (2, 5), procedural (3), and training (4) information on NGI-ESW. Proposed Specifications (code requirements) are oriented toward inclusion into ANSI/AASHTO/AWS Dl.5 Bridge Welding Code.

3. *Verification of NGI ESW Procedure.* The equipment, the new electrode wire, the flux formulation, and the recommended NGI-ESW procedure have been tested. This is crucial for the implementation of the new technology. The laboratory trials conducted at BIRL's welding laboratory, the Oregon Graduate Institute of Science and Technology, and FHWA demonstration field test trials have proven that acceptable electroslag welds can be produced on a regular basis.

4. *Verification of Toughness in NGI-ESW Welds.* Testing during the demonstrations has proved that acceptable toughness of electroslag welds can be produced on a regular basis.

5. *Transfer of New ESW Technology.* To methodically transfer the new ESW technology to State DOT's, bridge fabricators, FHWA representatives, and others, relevant information on the NGI-ESW technique is being disseminated and actual NGI-ESW welding is being demonstrated. The demonstrations, which began with two pilot presentations in 1998, will be continued in various locations in the United States. During the demonstration phase, the plan in place provides video-training materials on NGI-ESW for future use by State agencies, fabricators, and others.

NGI-ESW Process Description

Like conventional electroslag welding, the flux creates a molten slag pool and the electrode wire creates a molten weld pool. The molten metal pool is approximately 50

percent base metal. A consumable guide adds metal to the molten weld pool and upon melting, the insulators are mixed with the slag pool. Insulators are used to prevent short-circuiting between consumable guide and the plates. For NGI-ESW welds, neutral fused fluxes for optimized oxygen content (180-200 ppm) in the weld are used. Drying of fused flux used in the NGI-ESW process is critical to avoid microcracks (grain boundary separations) (Note: Fluxes for submerged arc welding cannot be used for NGI-ESW process because their physical properties do not meet the requirements for electrical conductivity, viscosity, melting point, and boiling point.)

Electrode wires for NGI-ESW process were designed to meet weld metal composition and properties, to reduce sensitivity to hot cracking, and to increase productivity. The specific characteristics and chemistry of the wire developed for NGI-ESW wire are noted below:

(A) ELECTRODE WIRE CHARACTERISTICS:

EWTG Classification
(American Welding Society A5.25 specification)
Tubular wire filled with metal powder
2.4 mm (3/32-in.) diameter
No copper coating on the surface

(B) ELECTRODE WIRE CHEMISTRY:

Carbon	0.03% max
Manganese	0.8-1.6%
Silicon	0.3-0.6%
Nickel	2.3-3.0%
Molybdenum	0.3-0.6%
Phosphorus	0.015% max
Sulfur	0.015% max
Vanadium	0.005% max
Titanium	0.02-0.10%
Aluminum	0.03% max

The consumable guide is made from low-carbon steel material to reduce susceptibility to hot cracking. The rectangular shape of the guide is designed to distribute heat more uniformly laterally in the joint (Figure 4); thus, the occurrence of incomplete fusion is reduced. The large cross section of the consumable guide increases welding productivity. Though only Sandwich type (Figure 5) and Wing type (Figure 6) consumable guides have been used to make test welds during NGI-ESW demonstrations, Web type (Figure 9) and Wing-Web type consumable guides were also researched and can be used. For joining plate thicknesses up to 75mm (3 in.), geometric shape, material details, and limitations for the application of these consumable guides are noted in references. (1), (2), (3) and (4). The Wing-Web types are suitable for plate thicknesses greater than 75 mm (3 in.). Wing-Web type consumable guides are not being used in the demonstrations. **Refer to the publication entitled *Improved Fracture Toughness and Fatigue Characteristics of Electroslag Welds*** (1) for details of this type of consumable guide.

NGI-ESW Welding Procedure Example

Range of process variables for the NGI-ESW demonstration project for welding 50 mm (2-in) thick plates are:

	CONVENTIONAL ESW	NGI-ESW
Root Opening	32± 2 mm (1-1/4 ± 3/32 in)	19 ± 1 mm (3/4 ± 1/32 in)
Amperage	600 ± 100 A (18%)	1,000 ± 100 A (10%)
Voltage	39 ±1 V (2.5%)	35 ± 0.5 V (1.5%)
Welding Speed	28 mm/min (1.1 ipm)	55 mm/min (2.2 ipm)
Heat Input	50 KJ/mm (1,270 KJ/in)	37 KJ/mm (940 KJ/in)

Observations From Research And Field Demonstrations and Rationale

Sensitivity to Weld Imperfections, Productivity and Cost Comparisons

The NGI-ESW process has significantly improved the standard ESW process used in the past. Sensitivity to weld imperfections is reduced, productivity is significantly increased, and weld HAZ toughness is improved. For example, the possibility of hot cracking is reduced in the NGI-ESW process. This is because of the high form factor value of the molten pool in the NGI-ESW process. The form factor is defined as the ratio W/D where W is the width of the molten metal pool and H is the depth of the metal pool as shown in Figures 10 and 11. The rationale for the high form factor is that the tubular electrode wire, which is fed at a relatively fast rate, is not able to maintain its integrity in the molten pool where it melts away easily resulting in a shallower and wider molten pool. For a given current, voltage also significantly affects depth and width of the pool.

Shallower and wider molten pools result in high form factor values known to mitigate hot cracking (See Figures 10 and 11).

The contribution from the alloyed filler metal used in the tubular electrode is such that it forms weld microstructure resistant to cracking (1). The possibility of incomplete fusion is also reduced because of the use of a rectangular cross section guide and the narrow root opening of the NGI-ESW process both of which contribute to relatively uniform heat distribution through the weld thickness. Welding speed (groove filling rate) is increased in the NGI-ESW process because the narrower root opening requires less filler metal to fill the root opening compared with the conventional ESW process.

Productivity is enhanced because of the higher metal melting rate. This is primarily due to the higher welding current, the larger size of the consumable guide, and the higher resistance of alloy powder in the electrode tubular wire of the NGI-ESW process. The improved weld toughness is a result of: (1.) the lower heat input which increases the cooling rate of the weld metal and (2.) the formation of beneficial microstructures in the alloy-enhanced weld metal. NGI-ESW procedure produces large amounts of acicular ferrite

(associated with high toughness), while reducing grain-boundary ferrite (associated with low toughness) to a minimum. Heat-affected-zone toughness is also increased because of lower heat input that reduces grain size in NGI-ESW heat-affected zones (1).

Cost comparisons of NGI-ESW with standard ESW and submerged arc welding show (3) that labor cost savings are substantial for the NGI-ESW process. These savings increase for thicker plates. Total cost savings can also be significant. The table below lists various operations in the NGI-ESW, the conventional ESW, and the submerged arc welding processes. In the chart, if the specific labor operation is required it is indicated by (+) sign; if the specific operation is not required in the process it is indicated with (-) sign.

	Basis for Cost Comparison		
Labor Operations	**SAW**	**STDESW**	**NGI-ESW**
* Beveling the plates and tabs	+	-	-
* Grinding the beveled edges	+	-	-
* Positioning the plates	+	+	+
* Welding the tab	+	+	+
* Tack welding the plates	+	-	-
* Preheating the joint	+	-	-
* Welding the face side of the joint	+	+	+
* Interpass setup and slag cleaning	+	-	-
* Turning over the partial weldment	+	-	-
* Arc gouging the weld root	+	-	-
* Grinding the gouged groove	+	-	-
* Welding the backside of the joint	+	-	-
* Straightening the weldment	+	-	-

Conclusions

Based on observations from the FHWA sponsored research and field demonstrations it is this author's opinion that NGI-ESW process may be used for joining steel bridge members as recommended in *FHWA Memorandum: Narrow-Gap Electroslag Welding For Bridges. March 20, 2000* (6).

Acknowledgments

I would like to acknowledge that the observations and the findings in this paper are based on the research work of the Department of Materials Science and Engineering, Oregon Graduate Center, Beaverton, Oregon under a contract (DTFH61-83-C-00112) with the United States Department of Transportation, Federal Highway Administration (FHWA) and also the NGI-ESW technology demonstration efforts by the Basic Industrial Research Laboratory of the Northwestern University, Evanston, Illinois, and Oregon Graduate Science and Technology Institute, Beaverton, Oregon, which led to the development of the FHWA demonstration project DP-102 "Narrow-Gap Improved Electroslag Welding for Bridges"- also under contract with the Federal Highway Administration. I would like to thank the United States Department of Transportation, Federal Highway Administration for providing

me with the support in developing this paper. I would like to express my appreciation for the valuable input from Prof. E.F. Nippes, (Consultant and Emeritus Professor, Rensselaer Polytechnic Institute, Troy, New York); Mr. Warren Alexander, (Consultant); and Mr. Fred Beckmann, (Consultant, past Director of Bridges, American Institute of Steel Construction.) I would also like to dedicate this paper to my loving wife Linda whose dedicated support and inspiration has been invaluable throughout my personal life and professional career.

References

1. *Improved Fracture Toughness and Fatigue Characteristics of Electroslag Welds*, Federal Highway Administration Publication No. FHWA-RD-87-026, October 1987.

2. *Technical Information Guide for Narrow-Gap Improved Electroslag Welding*, Federal Highway Administration Report No. FHWA-SA-96-053, January 1996.

3. *Process Operational Guide for Narrow-Gap Improved Electroslag Welding*, Federal Highway Administration Report No. FHWA-SA-96-052, February 1996.

4. *Training Manual for Narrow-Gap Improved Electroslag Welding*, Federal Highway Administration Report No. FHWA-SA-96-051, November 1995

5. *Proposed Specifications for Narrow-Gap Improved Electroslag Welding*, Federal Highway Administration Report No. FHWA-SA-96-050, November 1995.

6. *FHWA Memorandum: Narrow-Gap Electroslag Welding for Bridges. March 20, 2000*. This memorandum was issued by Mr. David H. Densmore, Director, Office of Bridge Technology

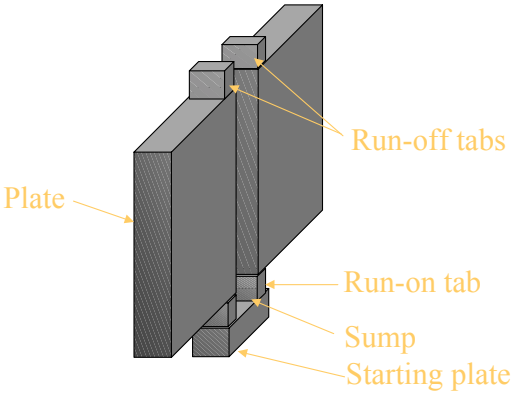

Plate Assembly
Figure 1

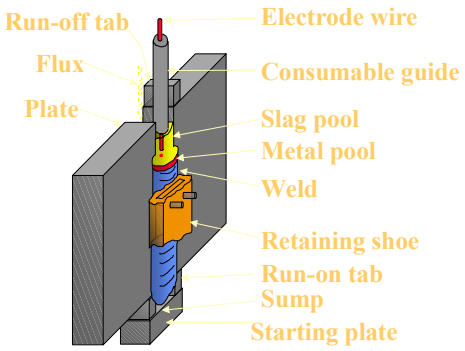

Schematic of the Conventional Electroslag Welding Equipment
Figure 2

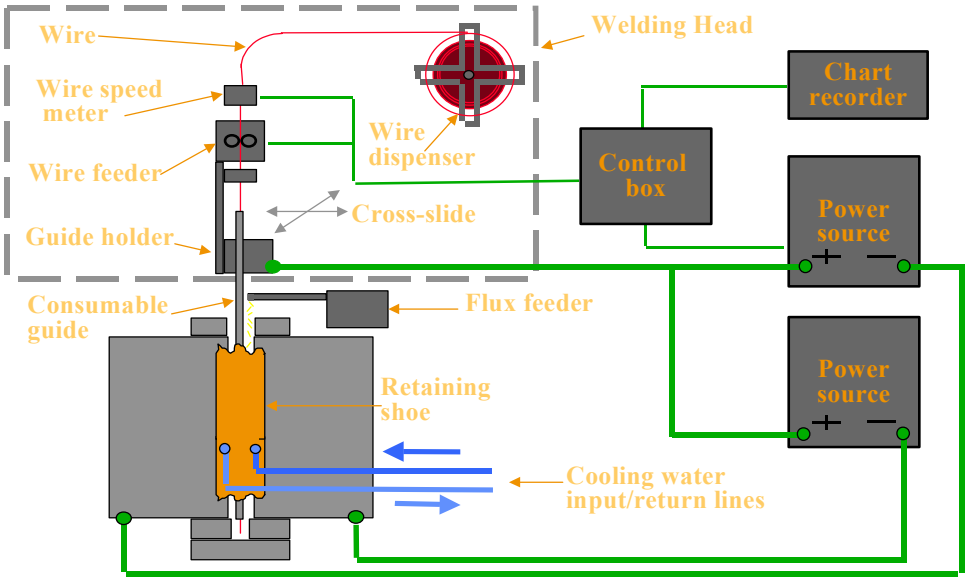

Narrow-Gap Improved Electroslag Welding Equipment
Figure 3

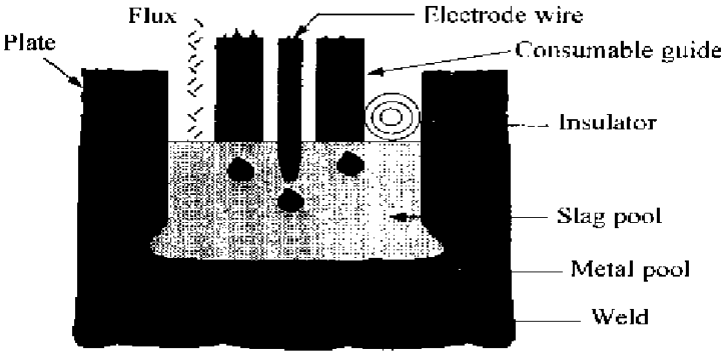

Contribution of Consumables to Weld Metal
Figure 4

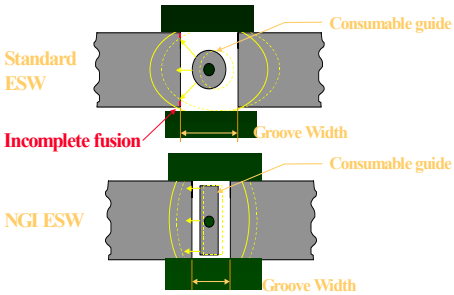

Effect of Improved Uniform Heat Flow on Susceptibility to Incomplete Fusion
Figure 5

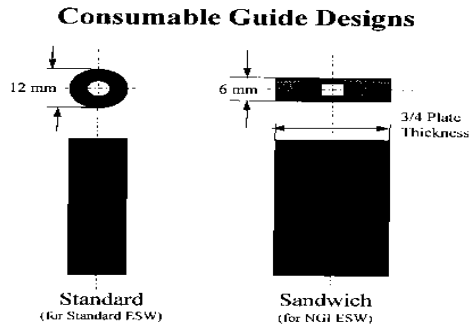

Sandwich-Type consumable Guide for NGI-ESW
Figure 6

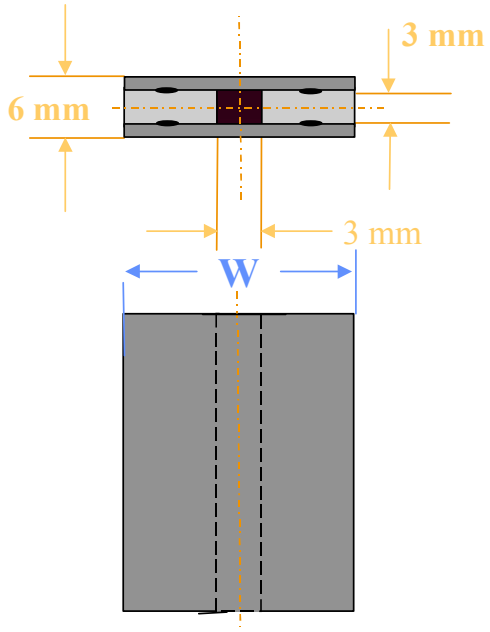

Sandwich-Type Consumable Guide For NGI-ESW (Suggested Design)
Figure 7

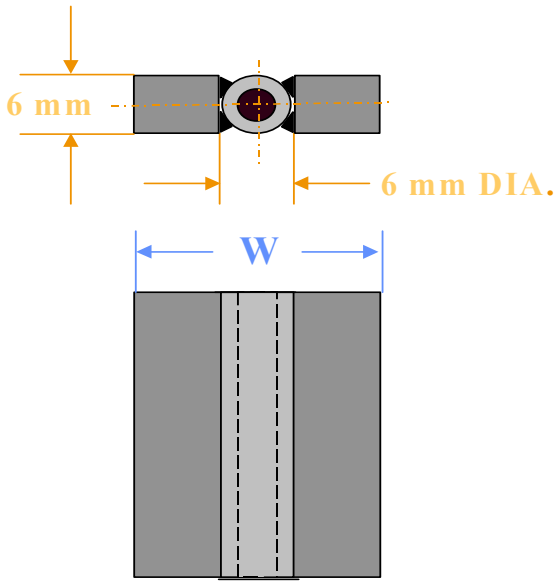

Wing-Type Consumable Guide for NGI-ESW (Suggested Design)
Figure 8

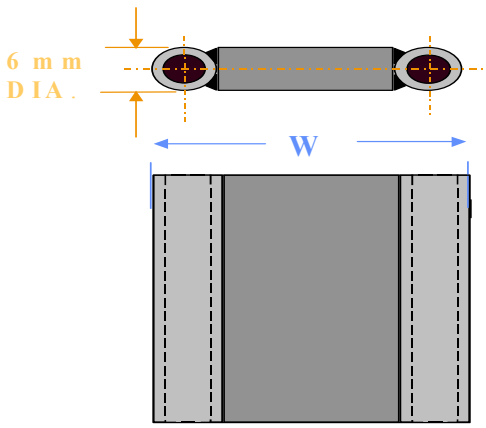

Web-Type Consumable Guide for NGI-ESW (Suggested Design)
Figure 9

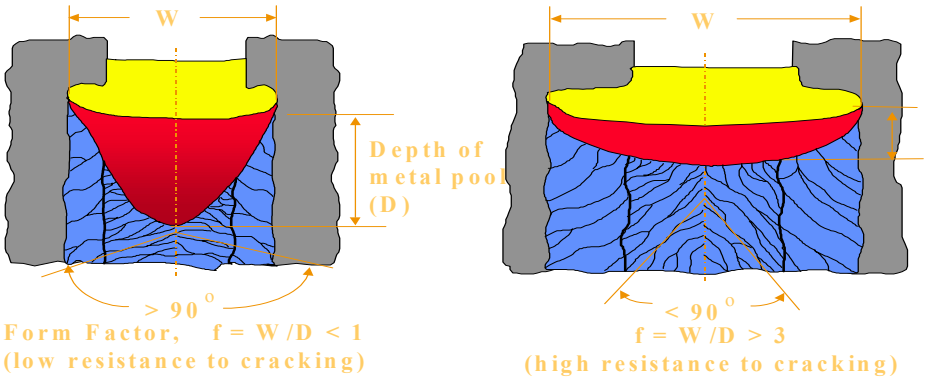

Grain Geometry
Figure 10

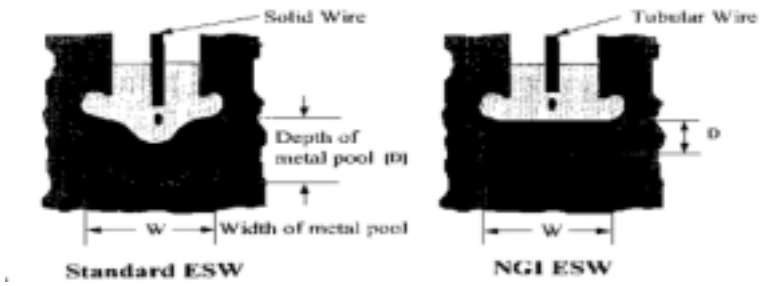

Effect of Wire Type on Susceptibility to Hot Cracking
Figure 11