MID-AMERICA
TRANSPORTATION CENTER

Report # MATC-UNL: 429

Final Report
25-1121-0001-429

Calibration of Microsimulation Models for Multimodal Freight Networks

Justice Appiah, Ph.D., P.E.
Postdoctoral Research Associate
Department of Civil Engineering
University of Nebraska–Lincoln

Bhaven Naik, Ph.D.
Postdoctoral Research Associate

Scott Sorensen
Graduate Research Assistant

2012

A Cooperative Research Project sponsored by the U.S. Department of Transportation Research and Innovative Technology Administration

The contents of this report reflect the views of the authors, who are responsible for the facts and the accuracy of the information presented herein. This document is disseminated under the sponsorship of the Department of Transportation University Transportation Centers Program, in the interest of information exchange. The U.S. Government assumes no liability for the contents or use thereof.

Calibration of Microsimulation Models for Multimodal Freight Networks

Justice Appiah, Ph.D., P.E.
Postdoctoral Research Associate
Department of Civil Engineering
University of Nebraska–Lincoln

Bhaven Naik, Ph.D.
Postdoctoral Research Associate
Department of Civil Engineering
University of Nebraska–Lincoln

Scott Sorensen
Graduate Research Assistant
Department of Civil Engineering
University of Nebraska–Lincoln

A Report on Research Sponsored by

Mid-America Transportation Center

University of Nebraska-Lincoln

June 2012

Technical Report Documentation Page

1. Report No. 25-1121-0001-429	2. Government Accession No.	3. Recipient's Catalog No.
4. Title and Subtitle Calibration of Microsimulation Models for Multimodal Freight Networks		5. Report Date June 2012
		6. Performing Organization Code
7. Author(s) Justice Appiah, Scott Sorensen, and Bhaven Naik		8. Performing Organization Report No. 25-1121-0001-429
9. Performing Organization Name and Address Mid-America Transportation Center 2200 Vine St. PO Box 830851 Lincoln, NE 68583-0851		10. Work Unit No. (TRAIS)
		11. Contract or Grant No.
12. Sponsoring Agency Name and Address Research and Innovative Technology Administration 1200 New Jersey Ave., SE Washington, D.C. 20590		13. Type of Report and Period Covered August 2011 – June 2012
		14. Sponsoring Agency Code MATC TRB RiP No. 28500
15. Supplementary Notes		

16. Abstract

This research presents a framework for incorporating the unique operating characteristics of multi-modal freight networks into the calibration process for microscopic traffic simulation models. Because of the nature of heavy freight movements in US DOT Region VII (Nebraska, Iowa, Missouri, Kansas), the focus of the project is on heavy gross vehicles (HGV), or, trucks. In particular, a genetic algorithm (GA) based optimization technique was developed and used to find optimum parameter values for the vehicle performance model used by "Verkehr In Staedten-SIMulationmodell (VISSIM)," a widely used microscopic traffic simulation software. At present, the Highway Capacity Manual (HCM), which is the most common reference for analyzing the operational characteristics of highways, only provides guidelines for highway segments where the heavy vehicle percentages are 25 or less. However, significant portions of many highways, such as Interstate 80 (I-80) in Nebraska, have heavy vehicle percentages greater than 25 percent. Therefore, with the anticipated increase in freight-moving truck traffic, there is a real need to be able to use traffic micro-simulation models to effectively recreate and replicate situations where there is significant heavy vehicle traffic. The procedure developed in this research was successfully applied to the calibration of traffic operations on a section of I-80 in California. For this case study, the calibrated model provided more realistic results than the uncalibrated model (default values) and reaffirmed the importance of calibrating microscopic traffic simulation models to local conditions.

17. Key Words Microsimulation, calibration, freight, truck, acceleration		18. Distribution Statement	
19. Security Classif. (of this report) Unclassified	20. Security Classif. (of this page) Unclassified	21. No. of Pages 59	22. Price

Table of Contents

Acknowledgments viii
Disclaimer ix
Abstract x
Chapter 1 Introduction 1
1.1 Background 1
1.2 Problem statement 2
1.3 Objectives 3
1.4 Relevance to MATC thematic thrust areas 3
1.5 Research approach and methods 4
Chapter 2 Literature review 5
2.1 Freight trends 5
2.2 Truck operating characteristics 6
2.2.1 Resistance forces 7
2.2.2 Tractive effort 10
2.2.2.1 Power requirements 10
2.2.2.2 Weight-to-power ratio 12
2.2.3 Acceleration performance 13
2.2.4 Truck acceleration characteristics 15
2.2.4.1 Low-speed acceleration 15
2.2.4.2 High-speed acceleration 16
2.2.5 Truck deceleration characteristics 17
2.3 Microscopic traffic simulation modeling 19
2.3.1 Overview of simulation models 19
2.3.2 Classification of simulation models 22
2.3.2.1 Microscopic models 22
2.3.2.2 Macroscopic models 22
2.3.2.3 Mesoscopic models 22
2.3.2.4 AIMSUN 23
2.3.2.5 CORSIM (CORridor SIMulation) 24
2.3.2.6 Paramics 24
2.3.2.7 SimTraffic 24
2.3.2.8 VISSIM 25
Chapter 3 Freight traffic simulation 26
3.1 U.S. Freight truck characteristics 27
3.1.1 Composition 27
3.1.2 Weight-to-power ratio 30
3.1.3 Acceleration 31
3.2 VISSIM model development and calibration 32
3.2.1 Test bed and data 33
3.2.2 Measures of performance 33
3.2.3 Input parameters 34
3.2.4 Calibration parameters 39
3.2.4.1 Car-following parameters 40
3.2.5 Calibration procedure 46
3.2.5.1 Initial population 47

3.2.5.2 Simulation 48
3.2.5.3 Fitness calculation 48
3.2.5.4 Stop criterion 49
3.2.5.5 New generation 49
3.2.6 Calibration results 50
3.2.7 Model validation 54
Chapter 4 Summary and conclusions 55
References 57

List of Figures

Figure 2.1 Freight-truck highway volumes 2005 and 2035 6
Figure 2.2 Resistance forces acting on truck 7
Figure 2.3 Trends in weight-to-power ratios of trucks from 1949 to 1984 13
Figure 2.4 Relationship among the forces available to accelerate, available tractive effort, and total vehicle resistance 14
Figure 2.5 Observed time versus distance curves for acceleration to high speed from a stop by a tractor-trailer truck 17
Figure 2.6 Overview of simulation process 20
Figure 3.1 Observed speed versus time curves for trucks 31
Figure 3.2 Observed truck length distribution at Emeryville test bed 35
Figure 3.3 Truck traffic composition used in VISSIM model 37
Figure 3.4 Truck weight distribution used in VISSIM model 39
Figure 3.5 Mean desired acceleration function in VISSIM 44
Figure 3.6 Flow chart of genetic algorithm calibration process 47
Figure 3.7 Observed and simulated speed profiles at calibration station 52
Figure 3.8 Error distributions in calibrated and uncalibrated models 53
Figure 3.9 Observed and simulated speed profiles at validation stations 54

List of Tables

Table 2.1 Resistance forces 9
Table 2.2 Truck deceleration rates for highway design 18
Table 3.1 Percentage distribution of U.S. truck fleet 28
Table 3.2 Distribution of truck length for specific trucks 29
Table 3.3 Distribution of gross vehicle weight for specific trucks 29
Table 3.4 Distribution of truck weight-to-power ratios 30

List of Abbreviations

Advanced Interactive Microscopic Simulator for Urban and Non-urban Networks (AIMSUN)
California Department of Transportation (Caltrans)
Corridor Simulation (CORSIM)
Federal Highway Administration (FHWA)
Freeway Simulation (FRESIM)
Genetic Algorithm (GA)
Gross Domestic Product (GDP)
Heavy Gross Vehicles (HGV)
Highway Capacity Manual (HCM)
Interstate 80 (I-80)
Mean Absolute Percentage Error (MAPE)
Mid-America Transportation Center (MATC)
Network Simulation (NETSIM)
Next Generation Simulation (NGSIM)
Planung Transport Verkehr (PTV)
Sport Utility Vehicle (SUV)
United States Department of Transportation (US DOT)
Vehicle Inventory Use Survey (VIUS)
Verkehr In Staedten-SIMulationmodell (VISSIM)

Acknowledgments

We would like to acknowledge the contributions of numerous individuals and organizations who made the successful completion of this project possible. We are especially grateful to:

- The California Department of Transportation for providing geometric data;
- The Federal Highway Administration for making truck profile data available to us through the Next Generation Simulation (NGSIM) project; and
- Mr. Larry Johnson of the Nebraska Trucking Association for sharing his insights with us.

Disclaimer

The contents of this report reflect the views of the authors, who are responsible for the facts and the accuracy of the information presented herein. This document is disseminated under the sponsorship of the U.S. Department of Transportation's University Transportation Centers Program, in the interest of information exchange. The U.S. Government assumes no liability for the contents or use thereof.

Abstract

This research presents a framework for incorporating the unique operating characteristics of multi-modal freight networks into the calibration process for microscopic traffic simulation models. Because of the nature of heavy freight movements in US DOT Region VII (Nebraska, Iowa, Missouri, Kansas), the focus of the project is on trucks or heavy gross vehicles (HGV).

In particular, a genetic algorithm (GA) based optimization technique was developed and used to find optimum parameter values for the vehicle performance model used by "Verkehr In Staedten-SIMulationmodell (VISSIM)", a widely used microscopic traffic simulation software. At present, the Highway Capacity Manual (HCM), which is the most common reference for analyzing the operational characteristics of highways, only provides guidelines for highway segments where the heavy vehicle percentages are 25 or less. However, significant portions of many highways, such as Interstate 80 (I-80) in Nebraska have heavy vehicle percentages greater than 25 percent. Therefore, with the anticipated increase in freight-moving truck traffic, there is a real need to be able to use traffic micro-simulation models to effectively recreate and replicate situations where there is significant heavy vehicle traffic.

The procedure developed in this research was successfully applied to the calibration of traffic operations on a section of I-80 in California. For this case study, the calibrated model provided more realistic results than the uncalibrated model (default values) and reaffirmed the importance of calibrating microscopic traffic simulation models to local conditions.

Chapter 1 Introduction

1.1 Background

The U.S. population increased by 36% between 1980 and 2010, while the economy, measured by gross domestic product (GDP) in 2005 chained-dollars, increased by 65% (US Department of Commerce 2011). This growth in population and expansion of economic activity over time has resulted in an increased demand for freight transportation. The U.S. transportation system moved 16 billion tons of goods in 2009. The Federal Highway Administration (FHWA) estimates that by 2020, the system will handle about 23 billion tons of cargo, worth approximately $30 trillion. The total tonnage is expected to increase to $27 billion by 2040. The bulk of this tonnage (approximately 68%) will be carried by trucks (FHWA 2011).

In the United States Department of Transportation (US DOT) Region VII area (Nebraska, Iowa, Missouri, Kansas), truck traffic is expected to grow over the next 20 years as freight is moved from, to, and across the region. Most of this growth will occur in urban areas and on the state highway system. The expected increase in truck traffic raises geometric design, safety, and operational concerns because of sight distance restrictions, low acceleration and deceleration capabilities of trucks, and the limited capability of trucks to maintain speeds, particularly on steep grades.

This research developed a framework for incorporating the unique operating characteristics of trucks into the calibration process for microscopic traffic simulation models of multimodal freight networks. As it is expected that trucks will carry the largest percent of this tonnage, the focus of the project was on commercial heavy vehicles. In particular, a GA based optimization technique was developed and used to find optimum parameter values for the multi-modal vehicle performance models used by the microscopic traffic simulation model, VISSIM.

The procedure was implemented using a micro-simulation model of a section of I-80 in Emeryville, California. This section of highway was selected because of the ready availability of usable data from the NGSIM project. At present, the HCM, which is the most common reference for analyzing the operational characteristics of highways, only provides guidelines for heavy vehicle percentages of 25% or less. However, it is not uncommon to find highway segments having higher proportions of heavy vehicles. For example, significant portions of I-80 in Nebraska have heavy vehicle percentages greater than 25%. It is expected that the procedure developed in this research will significantly improve the accuracy of simulations involving networks with substantial heavy vehicle traffic.

1.2 Problem Statement

The expected increase in truck traffic raises geometric design, safety, and operational concerns for the national transportation system, particularly on segments having steep grades. Microscopic traffic simulation models can be used to effectively understand the issues raised by high truck volumes, and to assess potential investment and operational alternatives. These models have become very useful tools for the planning, design, and operation of transportation systems, because they provide the ability to evaluate alternatives prior to their implementation in a convenient, quick, and risk-free manner. However, in order for a micro-simulation model to yield realistic results, it is necessary to adjust the default model parameter values so that the final model replicates local driver behavior and matches field data as closely as possible. For example, the microscopic traffic simulation model VISSIM has over 50 tunable model parameters that govern driving behavior and vehicle performance.

The vehicle performance logic of microscopic traffic simulation models is used to model the speed and acceleration characteristics of vehicles as they travel within the network. It is

especially important on links where trucks and other heavy vehicles travel on steep slopes and in situations where available engine power may be fully utilized (Cunha et al. 2009). Most users of traffic micro-simulation software calibrate the driving behavior parameters but simply use default values for the vehicle performance model. This approach could be problematic as the default parameter values may not represent actual vehicle characteristics. For example, truck lengths in the U.S. vary from 30 feet to as long as 80 feet, whereas the default truck length in VISSIM is 33.5 feet (Chatterjie 2009; PTV AG 2011). Therefore, the use of the default truck length value is inappropriate. It is expected that, for networks involving high truck volumes, failing to account for the unique characteristics of trucks may seriously undermine the accuracy of simulation models.

1.3 Objectives

The goal of this project was to develop a framework for calibrating microscopic traffic simulation models of multi-modal freight networks. The specific objectives were to (a) develop a procedure for incorporating the unique operating characteristics of trucks into the calibration process of micro-simulation models to better reflect the composition and characteristics of the current U.S. truck fleet; and (b) demonstrate the potential usefulness of the procedure through a case study.

1.4 Relevance to MATC Thematic Thrust Areas

A properly calibrated micro-simulation model that explicitly considers the unique characteristics of trucks will produce more realistic results for multi-modal networks that are typical of those found throughout US DOT Region VII and across the nation. Such a model can be useful for modeling alternative scenarios in a safe and risk-free environment. The project is

directly related to the Mid-America Transportation Center's (MATC) theme, "improving safety and minimizing risk associated with increasing multi-modal freight movement."

1.5 Research Approach and Methods

The proposed approach involved using a GA to find optimal values for the parameters of VISSIM using empirical performance data. The accuracy of the simulation model was assessed by comparing empirical and observed truck performance curves. The GA was used to find parameter sets representative of the most common classes of trucks in the U.S. VISSIM was used as the analysis tool because of its ability to model multi-modal traffic. It also is arguably the most commonly used micro-simulation model in the U.S.

Chapter 2 Literature Review

2.1 Freight Trends

The U.S. population increased by 36% between 1980 and 2010, while the economy, measured by GDP in 2005 chained-dollars, increased by 65% (U.S. Department of Commerce, 2011). This growth in population and expansion of economic activity, along with consumption increases and advances in manufacturing and shipping, has resulted in freight movement becoming one of the most important of modern transportation issues. The U.S. transportation system moved 16 billion tons of goods in 2009. It is expected that by 2040 the total tonnage will increase to 27 billion.

Nearly every good consumed in the U.S. is carried by a truck at some point. As a result, AASHTO estimates that trucks and the highway system carry 78% of all freight tonnage; by 2020 the highway system will carry an additional 6,600 million tons of freight, an increase of 62% (MORPC 2004). Trucks are the single most utilized mode to move freight, especially for distances of less than 500 miles. Figure 2.1 depicts the U.S. truck-freight volumes from 2004 and their projected increase in 2035. It can be observed that while there will be an overall increase in the flows throughout the nation, the Central and Midwest regions will see much of the increase, with a number of new routes also expected. A pronounced impact on freight trends will come from the enormous amount of trade that occurs over the nation's northern and southern borders. In 2009, trucks hauled nearly 58% of the goods transported between the U.S. and Canada, and over 67% transported between the U.S. and Mexico (American Trucking Association 2011).

It is expected that, as the North American economies become more interrelated and globally-based, the trend in trucking should only continue to grow, increasing the level of

congestion and thus the need to examine the impacts of trucks on the transportation network. More specifically, it is important to ensure that the criteria for roadway geometric design are appropriate for the current and anticipated fleet of heavy trucks on U.S. highways.

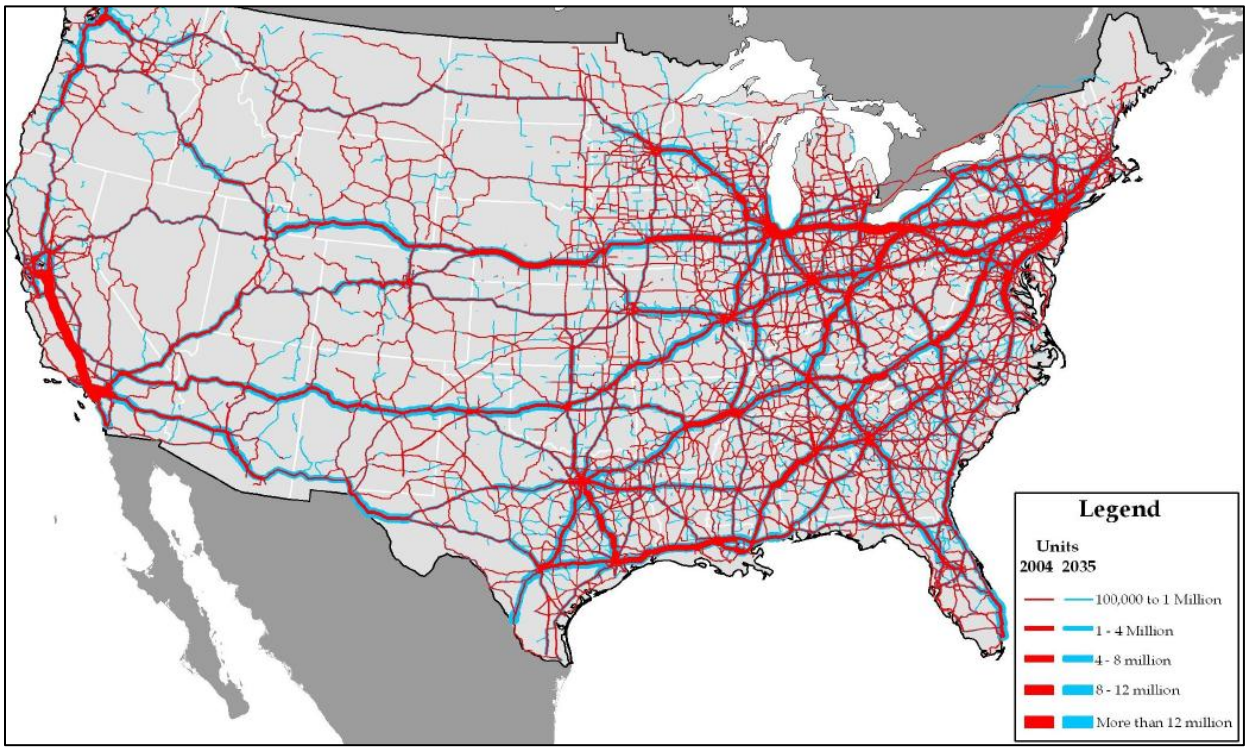

Source: Cambridge Systematics based on Global Insight, Inc. TRANSEARCH 2004 data and economic forecasts.

Figure 2.1 Freight-truck highway volumes in 2005 and 2035

2.2 Truck Operating Characteristics

Highways are primarily designed to facilitate passenger and freight movement in a manner that is timely, economic, comfortable, and above all, safe. Trucks play an important role in highway safety and operations because they possess different operating characteristics than passenger vehicles, and their volumes are increasing significantly. Trucks are larger and heavier than passenger vehicles, and therefore are slower to accelerate and have larger turning radii than passenger vehicles. These differences in performance characteristics affect design aspects, such

as roadway width, to accommodate vehicle off-tracking, length of stopping distances and acceleration (or deceleration) lanes, climbing lanes, and critical length of grade to accommodate heavy vehicles, as well as super-elevation and run-off length criteria. Knowledge of the impact of vehicle performance provides insight into highway design and traffic operations, while also forming the basis on which to assess the impact of advancing vehicle technologies and vehicle performance characteristics (Mannering et al. 2009).

The two primary, opposing forces that determine the performance of road vehicles (i.e., passenger cars, trucks, or buses) are tractive effort and resistance. By definition, tractive effort is the force available at the road surface to perform work; resistance is the opposing force impeding vehicle motion. Both tractive effort and resistance are typically expressed in pounds (lb) or Newtons (N) (Mannering et al. 2009).

2.2.1 Resistance Forces

A vehicle must overcome four primary resistance forces in order to move on a section of roadway (see fig. 2.2). These forces are: (i) aerodynamic resistance, R_1, (ii) rolling resistance, R_2, (iii) grade or gravitational resistance, R_3, and (iv) inertial resistance, R_4 (Mannering et al. 2009; AASHTO 2011).

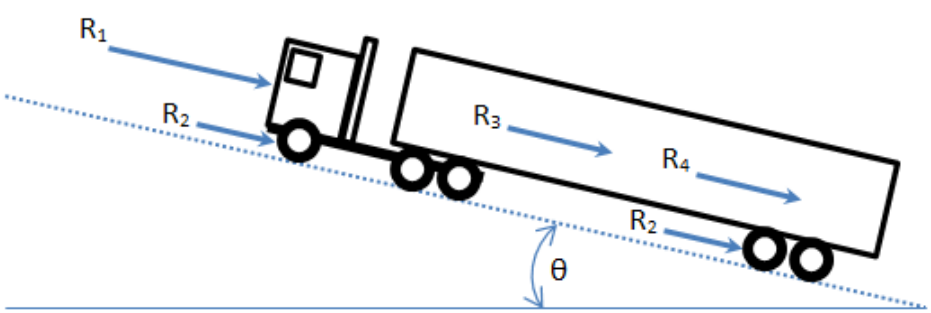

Figure 2.2 Resistance forces acting on truck

The resultant of the resistance forces along the vehicle's longitudinal axis is given as:

$$R_T = R_1 + R_2 + R_3 + R_4 \tag{2.1}$$

where,

R_T = total resistance force (lb),

R_1 = aerodynamic resistance (lb),

R_2 = rolling resistance (lb),

R_3 = grade or gravitational resistance (lb), and

R_4 = inertial resistance (lb).

Table 2.1 details each of the four forces that constitute total resistance. In column two, the source(s) from which each individual force originates is presented. Column three presents the percentage contribution of each source. Also given in column four of table 2.1 is the mathematical equation for computing each component resistant force.

Table 2.1 Resistance forces

Description	Source	Percentage Contribution	Mathematical Expression
1. Aerodynamic Resistance	(i) Turbulent flow of air around the vehcle body (ii) Friction of the air passing over the body of the vehicle (iii) Airflow through various vehicle parts e.g. radiator	85% 12% 3%	$R_1 = 1.1DC_DA_fV^2$ *D = density of air as a function of both temperature and elevation (slugs/ft^2)* *C_D = coefficient of drag* *A_f = cross-sectional area of truck front (ft^2)* *V = truck speed relative to the prevailing wind speed (ft/s^2)*
2. Rolling Resistance	(i) Deformation of tire as it passes over the roadway (ii) Penetration of tire into the surface and the corresponding surface tension (iii) Frictional motion as a result of slippage, and air circulation around tire	90% 4% 6%	$R_2 = f_rW$ *fr = coefficient of rolling resistance =* $f_r = 0.01\left(1+\frac{V}{147}\right)$ *W = gross vehicle weight*
3. Gradient Resistance	(i) Gravitational force acting on the vehicle	100%	$R_3 = W\left(\frac{G}{100}\right)$ *G = gradient (percent)*
4. Inertial Resistance	(i) Force necessary to allow vehicle to change speed	100%	$R_4 = \frac{W_a}{g}$ *W = gross vehicle weight* *a = instantenous acceleration (ft/s^2)* *g = acceleration due to gravity (32.2 ft/s^2)*

Source: Harwood et al. (2003); Mannering et al. (2009)

2.2.2 Tractive Effort

To overcome the effect of the resistance forces, the total available engine-generated tractive effort (F_e) must be considered. The maximum tractive effort available to overcome the resistance is a function of a variety of engine and design factors, including the shape of the combustion chamber, the air intake, fuel type, etc. (Mannering et al. 2009). In practice, the tractive effort is represented as a function of the vehicle's weight-to-power ratio.

2.2.2.1 Power requirements

Engine output is most commonly measured by torque and power. Torque is a measure of the twisting moment, or, work generated by the engine, expressed in foot-pounds (ft-lb) (Mannering et al. 2009). Power is defined as the rate of doing work, and is generally expressed in units of horsepower (hp) or kilowatts (kW). Power is related to engine torque, as given by equation 2.2:

$$P_e = \frac{2\pi M_e n_e}{550} \tag{2.2}$$

where,

Pe = engine-generated horsepower (hp),

Me = engine torque (ft-lb), and

n_e = engine speed (rpm).

According to the Traffic Engineering Handbook (ITE 1992), the typical maximum power available for large trucks is approximately 94% of the manufacturer's rated power available for propulsion. Truck propulsion rates can be used to examine the maximum acceleration rates and maximum speeds on grades based on nominal engine power (ITE 1992).

The concept of gear reduction to generate maximum power is one aspect that is of significant importance when considering engine power requirements, particularly because the tractive effort needed to provide adequate acceleration characteristics is greatest at low vehicle speeds, while maximum engine torque is developed at high engine speeds. Two factors play an important role in the development of gear reduction—the efficiency of the gear reduction device and the overall gear reduction ratio (Mannering et al. 2009). The efficiency of the gear reduction device (transmission, differential) is necessary because 5% to 25% of the tractive effort is lost in the gear reduction devices. This corresponds to a mechanical efficiency (η_d) of 0.75 to 0.95 (Mannering et al. 2009).

The gear reduction ratio (ε_0) also plays a key role in the determination of tractive effort. This ratio defines the relationship between the revolutions of the engine crankshaft and those of the drive wheel. As an example, if the gear reduction ratio is equal to five ($\varepsilon_0 = 5$), the engine crankshaft will turn five revolutions for every one revolution of the drive wheel. The engine-generated tractive effort can therefore be calculated using equation 2.3:

$$F_e = \frac{M_e \varepsilon_0 \eta_t}{r} \tag{2.3}$$

where,

F_e = engine-generated tractive effort (lb),

M_e = engine torque (ft-lb),

ε_0 = gear reduction ratio,

η_t = mechanical efficiency, and

r = radius of the drive wheels (ft).

2.2.2.2 Weight-to-power ratio

This ratio measures the ability of a vehicle to accelerate or maintain speed on upgrades. It is calculated by dividing the weight of the vehicle by the power. High weight-to-power ratios provide poorer acceleration performance, while low weight-to-power ratios provide better performance due to the low ratio of motion resistance to power capacity (ITE 1992). Weight-to-power ratios are especially important in the evaluation of truck performance, and have been shown to steadily decrease over the years, as seen in figure 2.3. This decrease is due to an increase in engine power, transmission arrangement, and engine speed. The 85th percentile weight-to-power ratios for trucks in the current truck fleet range from 170 to 210 lb/hp for the truck population that uses freeways, and 180 to 280 lb/hp for the truck population using two-lane highways (Harwood et al. 2003). The weight-to-power ratio is important as it defines the gradient climbing and speed maintenance characteristics of a vehicle as well as acceleration performance of a vehicle.

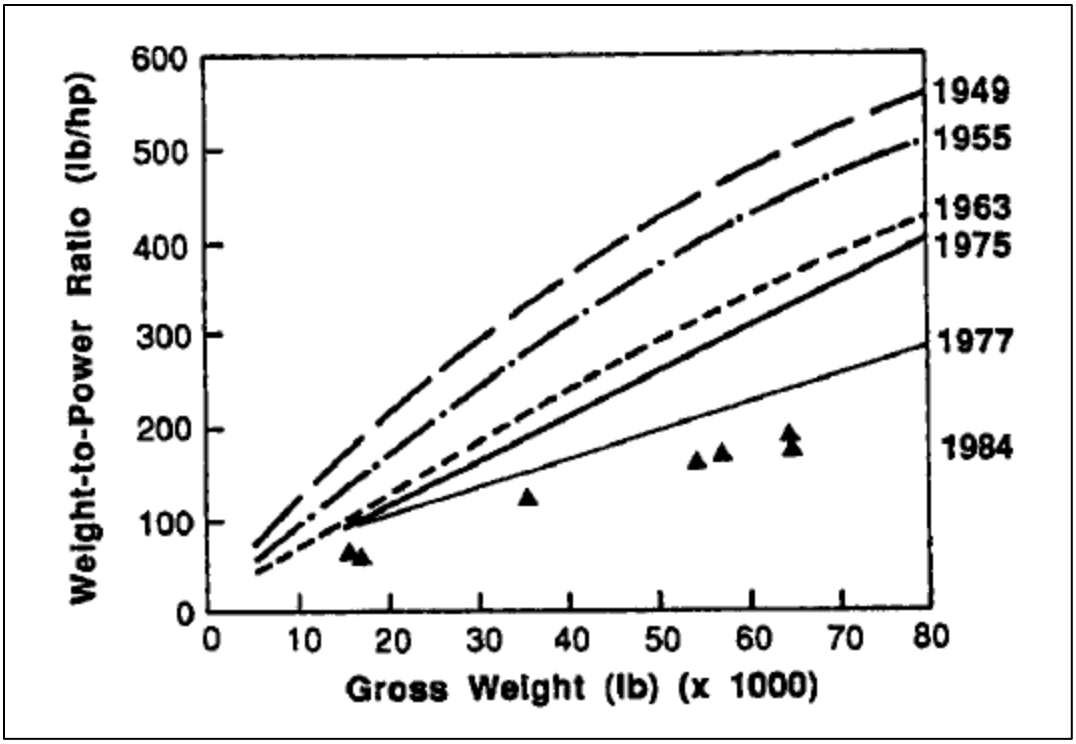

Source: *Harwood et al., 2003.*

Figure 2.3 Trends in weight-to-power ratios of trucks from 1949 to 1984

2.2.3 Acceleration Performance

As mentioned in the earlier sections, tractive effort, power requirements, and weight-to-power ratios can be used to determine vehicle performance characteristics, such as the vehicle acceleration. Vehicle acceleration can be related to tractive effort and power as defined in equation 2.4.

$$a = \frac{F_e - R}{\gamma_m m} \tag{2.4}$$

where,

γ_m = mass factor, calculated as $\gamma_m = 1.04 + 0.0025\varepsilon_0^2$

Fe = engine-generated tractive effort (lb),

R = total resistance (lb), and

m = mass of vehicle (lb).

The basic relationship between the net force available to accelerate (F_{net}), the available tractive effort (F_e), and the resistance forces (R) is shown in fig. 2.4.

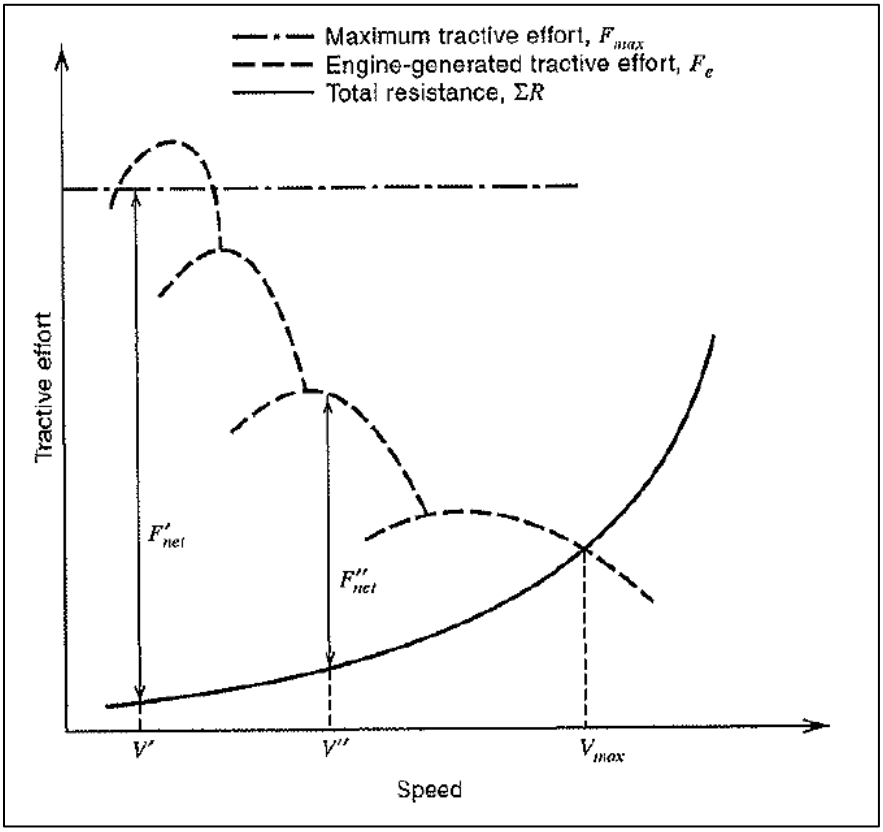

Source: *Mannering et al. 2009.*

Figure 2.4 Relationship among the forces available to accelerate, available tractive effort, and total vehicle resistance

The net force available to accelerate (F_{net}) is measured as the distance between the lesser of the maximum tractive effort (F_{max}) and the engine-generated tractive effort (F_e), and the total resistance (R). In figure 2.4, the engine-generated tractive effort curves represent the available tractive effort with gear reduction for a four-speed transmission. As an example, F'_{net} and F''_{net} are the net forces available in the first and third gears. The maximum attainable speeds as a function of tractive effort and resistance are also illustrated in figure 2.4. At the maximum speed

(V_{max}), the sum of the available tractive effort is equal to the resistance forces, at which point the acceleration is zero (Mannering et al. 2009).

2.2.4 Truck Acceleration Characteristics

Acceleration characteristics become critical in the determination of vehicle operations such as speed and lane-change characteristics, and also have implications for roadway geometric design. There are two critical aspects of truck acceleration performance that are most commonly considered—low-speed acceleration and high-speed acceleration.

2.2.4.1 Low-speed acceleration

Also referred to as "start-up" acceleration, this is the acceleration ability of a truck, which determines the distance required to clear a specified hazard zone such as a highway-rail grade crossing. A typical distance considered for a situation of this kind is less than 200 feet, during which the truck would attain a low speed (Harwood et al. 2003). Research by Gillespie (1986) developed a simplified model of the low-speed acceleration of trucks. The model estimates the time required for a truck to clear a hazard from a complete stop, as

$$t_c = \frac{0.682(L_{HZ} + L_T)}{V_{mg}} + 3.0 \qquad (2.5)$$

where:

t_c = time required to clear hazard (s),

L_{HZ} = length of hazard zone (ft),

L_T = Length of truck (ft), and

V_{mg} = maximum speed in selected gear (mph).

The Gillespie model was compared with results of field observations of time versus distance for 77 tractor-trailer trucks crossing zero-grade intersections from a complete stop (Gillespie 1986). The experimental data was used to provide maximum and minimum bounds on the observed clearance times. Furthermore, the Gillespie data was compared with data from 31 tractor-trailer combinations collected by Hutton (1970). The comparison showed that the Hutton data falls within the boundaries obtained by Gillespie. Based on these findings, Harwood et al. (1990) recommended that the range of clearance times for trucks be revised as follows:

$$t_{min} = -4.2 + 0.70\sqrt{36 + 1.25(L_{HZ} + L_T)} \tag{2.6}$$

$$t_{max} = 10.8 + 0.075(L_{HZ} + L_T) \tag{2.7}$$

2.2.4.2 High-speed acceleration

High-speed acceleration is the ability of a truck to accelerate to a high speed from either a complete stop or a lower speed, and is necessary for passing maneuvers and when entering high-speed facilities. The NCHRP Report 505 (2003) summarizes substantial research that developed speed-versus-distance curves for acceleration to high speeds. However, these studies are dated prior to 1990 and reflect the performance of past truck populations. Hutton (1970) developed acceleration data for trucks classified by weight-to-power ratio. Although this data was collected in 1970, the fundamental relationships between weight-to-power and truck performance have not changed substantially (Harwood et al. 2003). These relationships are presented in figure 2.5.

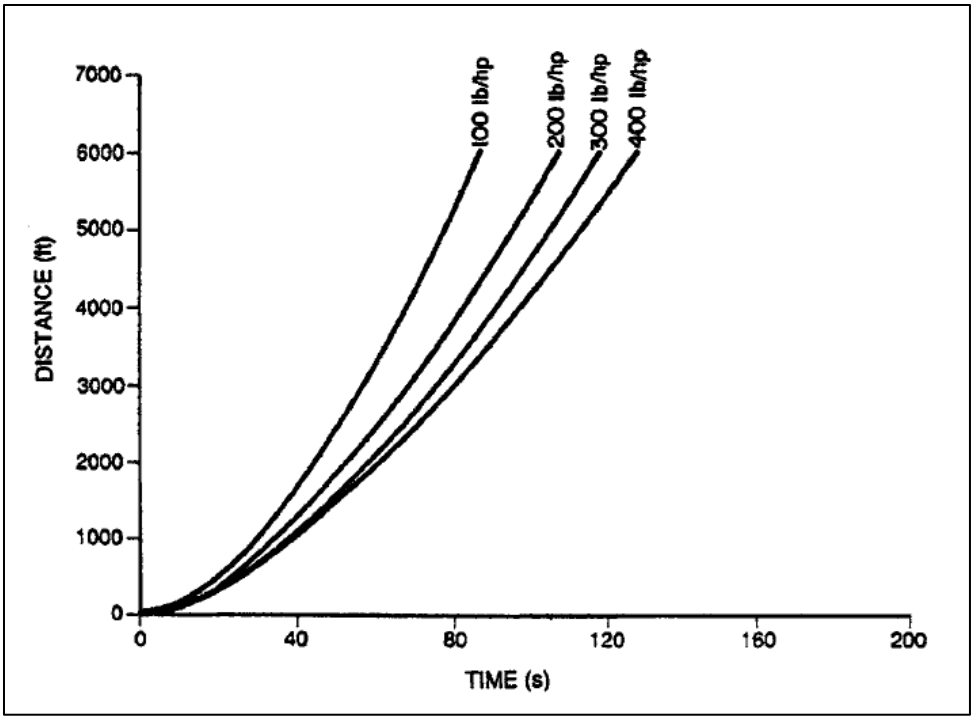

Source: *Harwood et al., 2003.*

Figure 2.5 Observed time versus distance curves for acceleration to high speed from a stop by a tractor-trailer truck

2.2.5 Truck Deceleration Characteristics

Deceleration characteristics determine the braking distance, and have been determined based on the friction factor of the pavement surface. Equation 2.8 outlines the braking distance equation as a function of the coefficient of friction between the tires and the pavement, while equation 2.9 presents the basic dynamic relationship for braking distance as a function of speed and deceleration (AASHTO 2011).

$$d = \frac{V^2}{30f} \tag{2.8}$$

$$d = 1.075\frac{V^2}{a} \tag{2.9}$$

where:

d = braking distance (ft),

V = initial speed (mph),

f = coefficient of friction, and

a = acceleration (negative when decelerating).

Several research projects analyzing the effects of truck deceleration rates as they relate to braking distance are available in the literature. Results from field tests conducted by Olson et al. (1984) indicate deceleration rates between 0.20g (6.5ft/s^2) and 0.42g (13.6ft/s^2). Further analysis performed by Harwood et al. (1990) identified truck deceleration rates and braking distances for use in highway design based on the 1984 AASHTO Green Book. The results of this study are provided in table 2.2.

Table 2.2 Truck deceleration rates for highway design

Vehicle speed (mph)	Deceleration Rate, g (fps^2)*			
	AASHTO Policy	Worst Performance Driver **	Best Performance Driver***	Antilock Braking System
20	0.40 (12.9)	0.17 (5.5)	0.28 (9.0)	0.36 (11.6)
30	0.35 (11.3)	0.16 (15.2)	0.26 (8.4)	0.34 (11.0)
40	0.32 (10.3)	0.16 (15.2)	0.25 (8.1)	0.31 (10.0)
50	0.30 (9.7)	0.16 (15.2)	0.25 (8.1)	0.31 (10.0)
60	0.29 (9.3)	0.16 (15.2)	0.26 (8.4)	0.32 (10.3)
70	0.28 (9.0)	0.16 (15.2)	0.26 (8.4)	0.32 (10.3)

*Based on empty tractor-trailer truck on wet pavement
**Based on driver control efficiency of 0.62
***Based on driver control efficiency of 1.00

NCHRP Report 400 provides recommendations on design deceleration rates by indicating that most drivers choose rates in excess of 0.57g (18.4 ft/s^2) when confronted with the need to stop due to an unexpected situation, and that approximately 90% of all drivers choose a deceleration rate in excess of 0.35g (11.2 ft/s^2). This rate is determined to be comfortable for most drivers and is recommended as the deceleration threshold for determining required sight distance regardless of initial speed.

2.3 Microscopic Traffic Simulation Modeling

In recent years, traffic simulation packages have become an important modeling tool for various aspects of transportation planning, design, and operations (Spiegelman et al. 2011). These models attempt to mimic a population of drivers on a theoretical highway network. More specifically, traffic simulation models seek to represent the interaction of the physical transportation system (e.g., roadways, intersections, traffic control) and the users of the transportation system, or demand (e.g., routes, driver characteristics). Traffic simulation models are a useful tool for modeling different scenarios when making traffic engineering design and planning decisions. Simulation models are useful tools because they allow the user to test different scenarios in a cheap, effective, and safe environment.

2.3.1 Overview of Simulation Models

An overview of the information flow in a generic simulation model is presented in figure 2.6. There are two basic inputs: supply (box 1) and demand (box 2). The supply consists of (i) the physical attributes of the network, and (ii) the operating strategies of the transportation agency. Examples of the former and latter include a two-lane roadway and a traffic signal, respectively. Note that the supply is typically under the direct control of the decision makers in charge of the transportation network. For example, they can add more lanes, change the use of

lanes (e.g. high occupancy vehicles), or change signal timing plans in the hope of improving performance. In contrast, transportation authorities have limited ability to manage demand. For example, they often do not have control over prices for using the network, and must use indirect approaches such as ramp metering or managed lanes techniques.

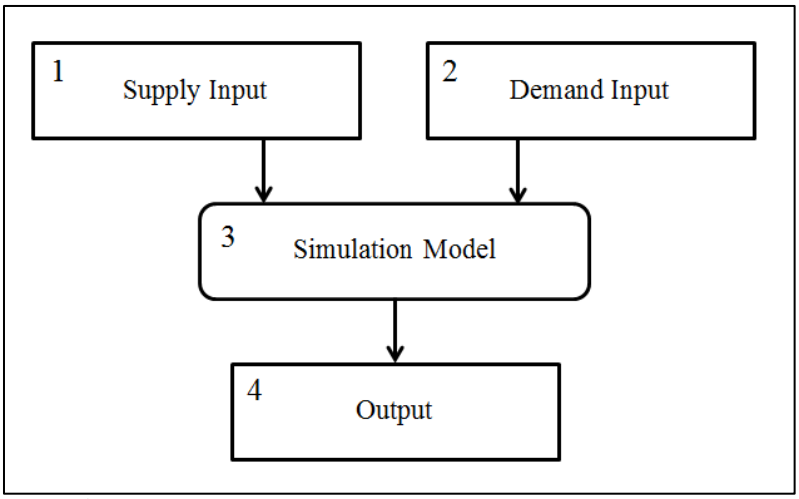

Adapted from – *Speigelman et al., 2011*

Figure 2.6 Overview of simulation process

In most models, the physical component of the supply is treated as a mathematical representation of nodes and links (Spiegelman et al. 2011). The attributes of nodes typically include location coordinates (*x*, *y*, and possibly *z*) and type of signal control (uncontrolled, stop sign, or traffic signal). The nodes often represent the intersections, although strictly speaking they are used to represent the beginning and end of a link. The links connect nodes and represent homogenous sections of the roadway.

The second input (shown in box 2 of fig. 2.6) is the transportation demand. The demand typically takes the form of an Origin-Destination matrix where the number of vehicles are defined whose drivers wish to travel from a given node *i* to a given node *j*, and whose drivers

wish to depart their origin at some point during a specific time period. Typically, the input also includes vehicle types (e.g., percentages of passenger cars, buses, tractor trailers, etc.), driver types, and the respective attributes of both (e.g., acceleration capabilities, braking capabilities, perception reaction time, driving aggressiveness, etc.) that are associated with the demand between the two nodes. If the traffic demand does not change over the course of the simulation than the model is defined as a static; otherwise, it is defined as dynamic.

Depending on the model package, the user can also input demand in the form of (a) observed volumes entering the links, and (b) turning movement percentages at intersections. The main advantage of this approach is that field data of the latter type is much easier to obtain than that required for estimating a reliable O-D matrix. The disadvantage of this approach is that the model user has little to no control over route choice and the interaction of vehicles.

In general, the user defines a specific length of simulation time (e.g., 3600 seconds) as part of the input. The simulation program progresses through the modeling process at small time increments while simultaneously modeling the interaction between the individual units, or vehicles, as they enter the network at their origin nodes, traverse it while interacting with the traffic control as well as other vehicles, and depart at their destination nodes. This process is represented by box 3 in figure 2.6.

Modeling large transportation networks will result in data available for analysis. Consequently, the user typically has discretion in the information that is output (box 4 in fig. 2.6) as part of this process, the form it should take, and the frequency of the output. Typical output may be categorized as (1) information related to vehicle statistics, (2) information related to specific links and/or intersections, and (3) information related to the system as a whole.

2.3.2 Classification of Simulation Models

Traffic simulation models can be classified into three major types—(i) Microscopic, (ii) Macroscopic, and (iii) Mesoscopic.

2.3.2.1 Microscopic models

Microscopic simulation models operate at an individual unit level. Therefore, these models track individual vehicles, each with its own set of driver and vehicle characteristics. Driver and vehicle characteristics, interactions with the network, and interactions between vehicles are all factors that determine movements (Owen et al. 2000). These models are driven by car-following, lane changing, and gap acceptance models.

2.3.2.2 Macroscopic models

Macroscopic simulation models are used to model entire transportation networks at an aggregated level. The vehicle movement is governed by the flow-density relationship without necessarily tracking the individual vehicle (Owen et al. 2000). More specifically, the simulation takes place on a section-by-section basis, and is based on deterministic relationships of flow, speed, and density in the traffic stream (Alexiadis et al. 2004). While this can adequately represent reality at a large scale, macroscopic models make some counterintuitive assumptions. For example, a car exists simultaneously at every point along its route during the entire period (morning peak, mid-day, evening peak, and off-peak) when its trip takes place (Druitt 1998).

2.3.2.3 Mesoscopic models

Mesoscopic simulation models were developed to bridge the gap between micro and macro models. These models simulate individual vehicles, but describe their activities and interactions based on aggregate (macroscopic) relationships. Typical applications of mesoscopic models are in the evaluation of traveler information systems. Here, the model can simulate the

routing of individual vehicles equipped with in-vehicle, real-time travel information systems. The output, such as travel times, is determined from the simulated average speeds on the network links, which are themselves calculated from a speed-flow relationship.

With the recent advances in computing power, there has been an increase in the use of microscopic traffic simulation models built around the concept of realistic movement of individual vehicles. The popularity also occurs because the systems they represent are so complex that more traditional macroscopic models become insufficient (Spiegelman et al. 2011). Microsimulation models provide the advantage of the user having more control over individual driver and vehicle characteristics, as well as control components (e.g., traffic signals). The next section briefly discusses some of the more well-known microscopic traffic simulation models available for commercial and research purposes in the U.S.

2.3.2.4 AIMSUN

AIMSUN is an "Advanced Interactive Microscopic Simulator for Urban and Non-urban Networks" developed by J. Barcelo and J.L. Ferrer at the Polytechnic University of Catalunya in Barcelona. AIMSUN is capable of reproducing real traffic conditions in urban networks having both expressways and arterial routes. Vehicles are modeled based on various behavior models, such as car-following, gap acceptance, and lane-changing. Typical output from AIMSUN includes flow, travel time, speed, etc., presented on printouts or plots. AIMSUN is a very diverse and adaptable program that can model different types of vehicles and drivers, and handles many types of roadway geometries. It can also simulate traffic lights and entrance points to the network. AIMSUN began as a research product, but is now available as a commercial product.

2.3.2.5 CORSIM (CORridor SIMulation)

CORSIM was developed by the FHWA in the mid-1970s and was the first windows-based version of a traffic simulation model. It integrates two existing models—NETSIM (NETwork SIMulation) and FRESIM (FREeway SIMulation). Different car-following and lane changing logic is used to model vehicles travelling on a freeway and/or on an urban network. CORSIM is able to model a variety of intersection controls, including actuated and pre-timed signals. The network is represented by a system of links and nodes, where the links represent roadway segments and nodes represent entry points, intersections, or changes in the roadway (Pas 1996). CORSIM was developed primarily to model passenger vehicles, but can also model bus routes and truck lanes.

2.3.2.6 Paramics

The Paramics model was developed in the early 1990s at the University of Edinburgh. It includes a sophisticated microscopic car-following and lane changing model for roadways up to 32 lanes wide. Paramics has numerous inputs to adjust for driver and vehicle characteristics, which allows it to be more accurate than other systems. Paramics is a Linux-based software, but can be used on Windows-based computers using the emulator 'Exceed by Hummingbird' (Boxill and Yu 2000). Paramics can model transit operations, bus, or light rail, with user defined scheduling and bus stop loading. It also includes a batch farm to manage multiple model runs and a sophisticated data analysis tool to aggregate and compare scheme options.

2.3.2.7 SimTraffic

Developed by Trafficware, SimTraffic works hand-in-hand with the signal optimization program Synchro. It was developed to provide a user-friendly modeling and visualization alternative to CORSIM (Husch and Albeck 1997). SimTraffic was developed based on vehicle

and driver performance characteristics similar to those used for CORSIM. The primary strength of SimTraffic lies in its ability to model signalized intersections, though it can also model most network geometries, including limited applications of roundabouts.

2.3.2.8 VISSIM

VISSIM is a discrete, stochastic, time step based microscopic traffic simulation model. It was developed by Planung Transport Verkehr (PTV) in Karlsruhe, Germany (VISSIM Manual 2009). Internally, the model consists of two distinct components—a traffic simulator that simulates the movement of vehicles and a signal state generator that determines and updates the signal status. The signal control logic in VISSIM can be used to model virtually any control logic, including fixed time, actuated, adaptive, transit signal priority, and ramp metering. VISSIM uses links to model roadways; however, it does not have the traditional node structure found in CORSIM. The node-less network structure and separate signal state generator give the user greater flexibility in defining the traffic environment. VISSIM allows the modeling of multi-modal transit systems, and can interface with planning and forecasting models.

Chapter 3 Freight Traffic Simulation

This chapter develops a framework for incorporating the unique operating characteristics of trucks into the calibration process for microscopic traffic simulation models. The use of microscopic traffic simulation models in traffic operations, transportation design, and transportation planning has become widespread across the U.S. because of (i) rapidly increasing computer power required for complex micro-simulations, (ii) the development of sophisticated traffic micro-simulation tools, and (iii) the need for transportation engineers to solve complex problems that do not lend themselves to traditional analysis techniques. Other common reasons for the popularity of micro-simulation models include their attractive animations and the ability to capture stochastic variability inherent in real-world traffic conditions.

The basic architecture of microscopic traffic simulation models includes input on the supply (i.e. links, nodes, traffic control system) and demand (point-to-point trip movements, link volumes, vehicle routes) components of the transportation network. In order to be credible, it is critical that the micro-simulation model operates as near to reality as possible. This requires that the default model parameters are adjusted to match those of the specific network and driver population for which the model is being developed. The process whereby model parameters are adjusted so that the simulation output matches field data is known as model calibration. While it is relatively straightforward to build and run the simulation model, it is considerably more difficult to calibrate the model to local conditions. Moreover, most users of traffic micro-simulation software calibrate the driving behavior parameters and simply use default values for the vehicle performance model. This approach could be problematic, especially for networks in mountainous or rolling terrain with traffic containing a significant proportion of heavy vehicles, where the default vehicle performance parameter values may not be appropriate.

It was hypothesized that the explicit incorporation of the vehicle performance model of trucks will improve the accuracy of simulations involving multi-modal networks in rolling or mountainous terrain. The next section discusses key characteristics of the U.S. truck fleet, with the goal of identifying relevant characteristics to ensure efficient micro-simulation modeling.

3.1 U.S. Freight Truck Characteristics

3.1.1 Composition

According to the 2002 Vehicle Inventory Use Survey (VIUS), there were approximately 5.5 million trucks in the U.S. fleet, excluding, pickup trucks, minivans, other light vans, and sport utility vehicles (SUV) in 2002 (U.S. Census Bureau 2004). Table 3.1 shows the distribution of the U.S. truck fleet between 1992 and 2002 (the most recent year for which VIUS data was available) by vehicle size, axle configuration, total length, and annual miles of travel (Harwood et al. 2003; VIUS 2004).

Table 3.1 Percentage distribution of U.S. truck fleet

Vehicular/Operational Characteristic	2002	1997	1992
Vehicle size (weight, lb)			
Light (10,000 or less)	14.6	21.3	25.9
Medium (10,001 to 19,500)	22.5	21.0	20.3
Light-heavy (19,501 to 26,000)	16.0	12.9	14.3
Heavy-heavy (26,001 or more)	46.9	44.8	39.4
Total length (ft)			
Less than 20.0	27.7	24.4	-
20.0 to 27.9	27.9	33.3	-
28.0 to 44.9	19.2	15.2	-
45.0 to 69.9	19.3	22.7	-
70.0 or more	5.9	4.4	-
Annual miles			
Less than 5,000	29.3	27.4	32.5
5,000 to 9,999	13.0	13.3	14.7
10,000 to 19,999	19.2	19.9	19.1
20,000 to 29,999	12.2	10.3	10.0
30,000 or more	26.3	29.0	23.6
Axle configuration			
2-axle single-unit	59.3	57.7	62.1
3-axle or more single-unit	10.9	10.3	9.9
3-axle combination	2.1	2.2	2.4
4-axle combination	4.8	6.3	6.1
5-axle or more combination	22.9	23.5	19.4

It may be inferred from the table that during the ten-year period cited, trucks on the highway system were increasingly becoming heavier and longer, while traveling more miles. Average annual miles of travel per truck increased 15.4% from 22,800 miles in 1992 to 26,300 miles in 2002. The data in table 3.1 show that single-unit trucks constituted the majority (e.g. 70.2% in 2002) of the truck fleet during each of the three years shown. However, combination trucks covered the majority of the truck miles in all of those years. For example, even though combination trucks only constituted approximately 30% of the total truck fleet in 2002, they constituted approximately 65% of total truck miles (VIUS 2004).

Tables 3.2 and 3.3 summarize the distributions of truck lengths and gross vehicle weights for specific trucks from the 2002 VIUS data.

Table 3.2 Distribution of truck length for specific trucks

Total length	Single-unit trucks and truck-tractors		Single-unit truck with trailer		Truck-tractor with single trailer		Truck-tractor with double trailer		Truck-tractor with triple trailer	
(ft)	(10^3)	%	(10^3)	%	(10^3)	%	(10^3)	%	(10^3)	%
Less than 20.0	72155.3	87.9	0.0	0.0	0.0	0.0	0.0	0.0	0.0	0.0
20.0 to 27.9	7231.5	8.8	403.2	23.7	0.0	0.0	0.0	0.0	0.0	0.0
28.0 to 44.9	2663.0	3.2	1024.3	60.2	121.0	9.2	0.0	0.0	0.0	0.0
45.0 to 69.9	34.1	0.0	270.4	15.9	918.7	69.6	28.0	42.2	0.0	0.0
70.0 or more	0.0	0.0	4.7	0.3	280.5	21.2	38.4	57.8	1.5	100.0

Table 3.3 Distribution of gross vehicle weight for specific trucks

Vehicle size	Single-unit trucks and truck-tractors		Single-unit truck with trailer		Truck-tractor with single trailer		Truck-tractor with double trailer		Truck-tractor with triple trailer	
	(10^3)	%	(10^3)	%	(10^3)	%	(10^3)	%	(10^3)	%
Light	78,649.0	95.8	1,110.6	65.2	0.0	0.0	0.0	0.0	0.0	0.0
Medium	1,512.1	1.8	401.9	23.6	0.0	0.0	0.0	0.0	0.0	0.0
Light-heavy	820.5	1.0	77.5	4.6	12.3	0.9	0.0	0.0	0.0	0.0
Heavy-heavy	1,102.4	1.3	112.5	6.6	1,307.7	99.1	66.6	100.0	1.5	100.0

The data in table 3.2 show that most single-unit trucks and truck-tractors without trailers were less than 28 ft long, while most combination trucks were 45 ft or more in length. The data in table 3.3 also show that most truck-tractors without trailers and single-unit trucks with or without trailers had gross vehicle weights less than 10,000 lb, while nearly all truck-tractors with trailers had weights greater than 26,000 lb.

3.1.2 Weight-to-Power Ratio

The maximum acceleration available to a truck is highly dependent on its weight-to-power ratio. The weight-to-power ratio has a particularly important effect on the ability of a truck to maintain speed on an upgrade. In general, trucks with lower weight-to-power ratios have better acceleration capabilities. Therefore, it is not surprising that the weight-to-power ratios of trucks have been decreasing for many years. This is consistent with a trend toward the development of increasingly powerful tractor engines over the past several years. For example, the average tractor power was 282 hp in 1977 and 350 hp in 1984. The trend towards more powerful engines continued through the 1980s and 1990s (Harwood et al. 2003).

Harwood et al. (2003) documented the distributions of weight-to-power ratios on freeways in three states: California, Colorado, and Pennsylvania. These are reproduced in table 3.4. The distributions show that the median weight-to-power ratios in the three states were 141 lb/hp, 115 lb/hp, and 168 lb/hp, respectively, while the corresponding 85th percentile weight-to-power ratios were 183 lb/hp, 169 lb/hp, and 207 lb/hp (see table 3.4).

Table 3.4 Distribution of truck weight-to-power ratios

	Weight-to-power ratio		
Percentile	California	Colorado	Pennsylvania
5th	83	69	111
25th	112	87	142
50th	141	115	168
75th	164	152	194
85th	183	169	207
90th	198	179	220
95th	224	199	251

3.1.3 Acceleration

The ability of a truck to accelerate to a high speed, either from a stop or from a lower speed, is an important performance characteristic that influences passing maneuvers and entry into a high-speed facility. A 1970 study by Hutton established curves that summarize important fundamental relationships between weight-to-power ratios and truck performance. Figure 3.1, adapted from Hutton's study, shows speed-versus-time curves for acceleration from rest to higher speeds by trucks with varying weight-to-power ratios (Hutton 1970).

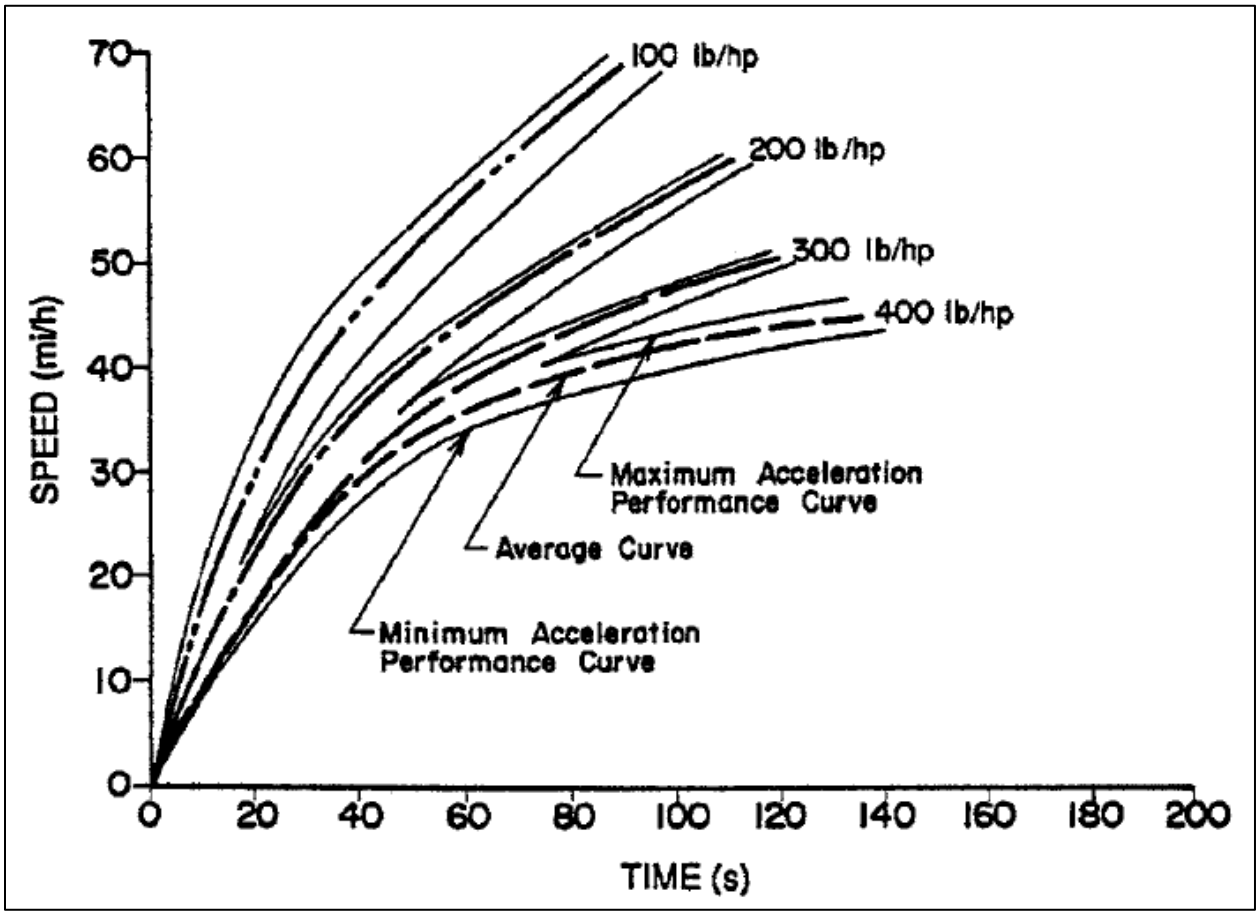

Source: *Harwood et al., 2003.*

Figure 3.1 Observed speed versus time curves for trucks

It may be seen from figure 3.1 that the ability of a truck to accelerate to higher speeds decreases with increasing initial speed. For example, the curves suggest that the acceleration rate for a 100-lb/hp truck to increase its speed from 35 to 55 mph is 0.53 ft/s^2. A rate of 1.47 ft/s^2 is needed for the same truck to accelerate from 20 to 40 mph (Harwood et al. 2003). The curves also confirm that trucks with lower weight-to-power ratios have superior acceleration capabilities. For example, a 200-lb/hp truck can increase its speed from 35 to 55 mph at a rate of 0.36 ft/s^2 while a 300- or a 400-lb/hp truck cannot accelerate to 55 mph within the time scale, as shown in the figure.

3.2 VISSIM Model Development and Calibration

Microscopic traffic simulation models can be used to effectively evaluate and present the issues raised by the expected increase in truck volumes due to increasing freight movements, and to assess potential investment and operational alternatives. A number of microscopic traffic simulation models are currently available. Some of the models commonly used for research and commercial purposes in North America are CORSIM, Paramics, and VISSIM. VISSIM was chosen for this study because it can effectively model multimodal systems, and is arguably the most widely used in the U.S.

VISSIM is a stochastic microscopic traffic simulation model developed by PTV AG, Germany. The model consists internally of two distinct components that communicate through an interface. The first component is a traffic simulator that simulates the movement of vehicles and generates the corresponding output. The second component is a signal state generator that determines and updates the signal status using detector information from the traffic simulator on a discrete time step basis. The input data required for VISSIM include network geometry, traffic demand, phase assignments, signal control timing plans, vehicle speed distributions, and the

acceleration and deceleration characteristics of vehicles. The model is capable of producing measures of effectiveness commonly used in the traffic engineering profession, such as average delay, queue lengths, and fuel emissions.

Because the ability to accurately and efficiently model traffic flow characteristics, driver behavior, and traffic control operations is critical for obtaining realistic micro-simulation results, it is essential that the model is calibrated to local conditions. Calibration involves finding the appropriate combinations of model parameters that minimizes errors between the observed and simulated performance measures. The proposed approach for developing, calibrating, and validating traffic micro-simulation models of multi-modal freight networks, with an emphasis on truck traffic, is described below.

3.2.1 Test Bed and Data

A 2,950 ft section of I-80 in Emeryville, California was identified as the test bed for the VISSIM micro-simulation model. This section of highway was selected for simulation because truck performance data were readily available through the FHWA Next Generation Simulation (NGSIM) program (NGSIM 2012). Truck trajectory, speed, and acceleration data were downloaded from the NGSIM community website using the "vehicle class" variable to select truck (or heavy vehicle) information. The downloaded data were then imported into Microsoft Excel for reduction.

3.2.2 Measures of Performance

The first step in the model calibration and validation process was to determine appropriate performance measures. The measure selected for this study was the speed profile of trucks along the simulated section of freeway. Truck speed profiles from 14 stations, or data collection points, were used to calibrate the model, while speed profiles from nine other stations

were used to validate the model. Truck speed profiles were chosen as the performance measure because (i) they are a reasonable indicator of truck performance; and (ii) they were fairly easy to construct both from the NGSIM data as well as from the VISSIM output. The empirical speed performance curve served as a basis for assessing the reliability of the calibrated model parameters. If parameters are reliable and simulation results are accurate, then the empirical performance curve should be reasonably close to the simulated performance curve. In this study, closeness was measured by the discrepancy (mean absolute percentage error) between observed and simulated truck speeds at 200 ft intervals along the roadway profile.

3.2.3 Input Parameters

Input data required for the VISSIM model included information on the supply component (e.g. links and nodes), the demand component (e.g. point-to-point trip movements, link volumes, and vehicle routes), and their interaction. The primary supply input for the test bed in this study included background maps, roadway segments, and ramp junctions. Roadway segments were coded as links and connected to ramp junctions, which were coded as nodes. The major attributes of the coded supply elements included:

i. Link attributes: number, length, width, grade, and any distinguishing features of the link such as the location of lane drops, auxiliary lanes, the presence and location of speed reduction zones, and how links connect to each other and to nodes in the network.

ii. Node attributes: locations of on- and off-ramps, weaving sections, ramp lane widths and degrees of curvature.

iii. Priority rules: at merge and diverge sections.

Network geometry data, including number of lanes, lane widths, merge and diverge areas, entry and exit ramp locations, and segment grades, were retrieved from blueprints provided by the California Department of Transportation (Caltrans). Other supply data sources included aerial photos background images provided on the NGSIM website. These served as "background maps" in building the VISSIM model (PTV AG 2011).

Demand data in the form of point-to-point trip movements, as represented by an origin-destination matrix, were obtained from the NGSIM data set. Data were collected for a 30-minute period. The traffic composition included 4% trucks and 96% cars. The percentage distribution of trucks of various lengths observed in the data set is shown in figure 3.2.

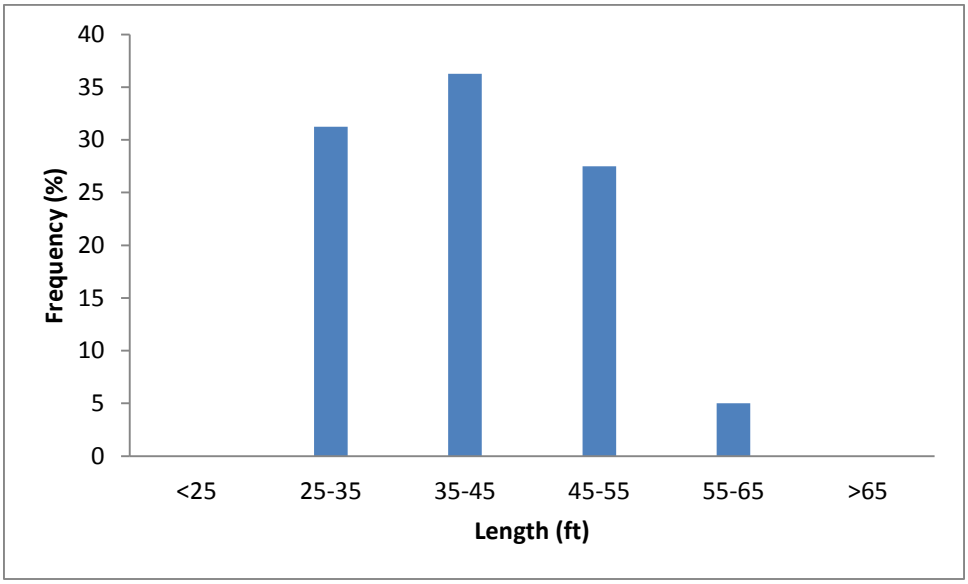

Figure 3.2 Observed Truck length distribution at Emeryville test bed

It may be seen in figure 3.2 that approximately 69% of trucks observed in this study had lengths greater than 35 ft. Therefore, it was concluded that the VISSIM default truck length of

33.5 ft was not appropriate for this study. Instead, each length category was modeled by a representative truck, as shown in fig. 3.3 (Harwood et al. 2003).

Truck model	Name (Composition)
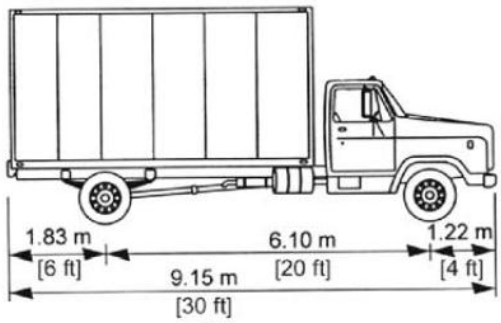	2-axle single unit truck (31.3%)
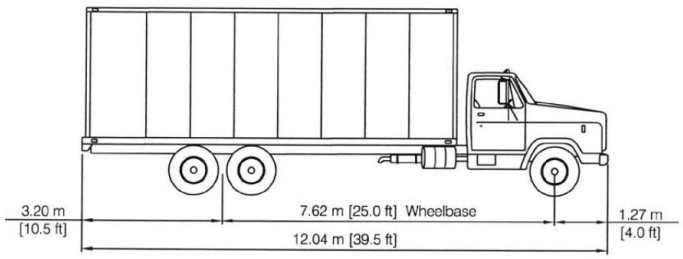	3-axle single unit truck (36.2%)
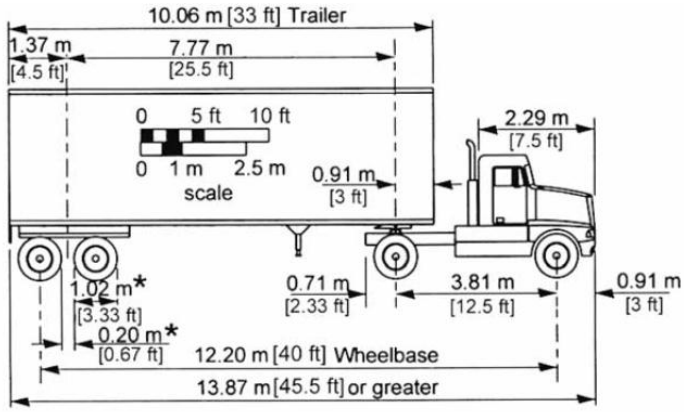	Intermediate semitrailer (WB-40) (27.5%)
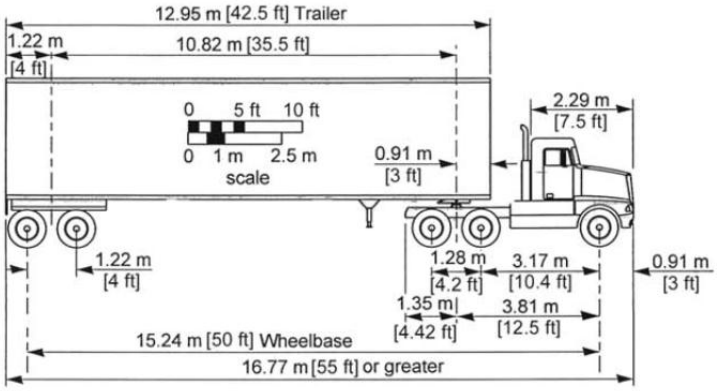	Intermediate semitrailer (WB-50) (5.0%)

Figure 3.3 Truck traffic composition used in VISSIM model

Two other input parameters that affect the driving behavior of a truck on a slope are the weight and power. In VISSIM, the weight and power of vehicles categorized as trucks or HGV are defined as distributions. The power-to-weight ratio of a truck in the model is calculated by randomly drawing a weight and a power value from the respective distribution. The calculated power-to-weight ratio, constrained in VISSIM to non-extreme values ranging between 7 kW/t and 30 kW/t, is then used to determine the truck's acceleration.

Neither the weight distribution nor the power distribution was available for this study. Consequently, a weight distribution was initially deduced from the 2002 VIUS data (summarized in tables 3.1 and 3.3) and adjusted by linear interpolation to percentile points for the distribution of the weight-to-power ratio of trucks on California freeways. For example, it can be seen from figure 3.3 that single-unit trucks constituted 67.5% of the NGSIM data used in this study. The 2002 VIUS data in table 3.3 also show that 95.8% of single-unit trucks could be classified as "light," or, had gross vehicle weights of less than 10,000 lb. By assuming that the distribution of weights in the VIUS data set was applicable to the NGSIM data, it was estimated that approximately 64.7% of the trucks in this study had weights less than 10,000 lb. Thus, the 5th-percentile truck weight, for example, was estimated as 7,893 lb by linear interpolation between 7,716 lb (the minimum weight of a vehicle categorized as HGV or truck in VISSIM [Holman 2012]) and 10,000 lb (the "upper bound" of the "light truck" category in table 3.1). Similarly, by recognizing that federal weight limit for trucks on freeways is 80,000 lb, the 85th-percentile weight was estimated as 29,531 lb (Harwood et al. 2003). The overall truck weight distribution used in this study is shown in figure 3.4.

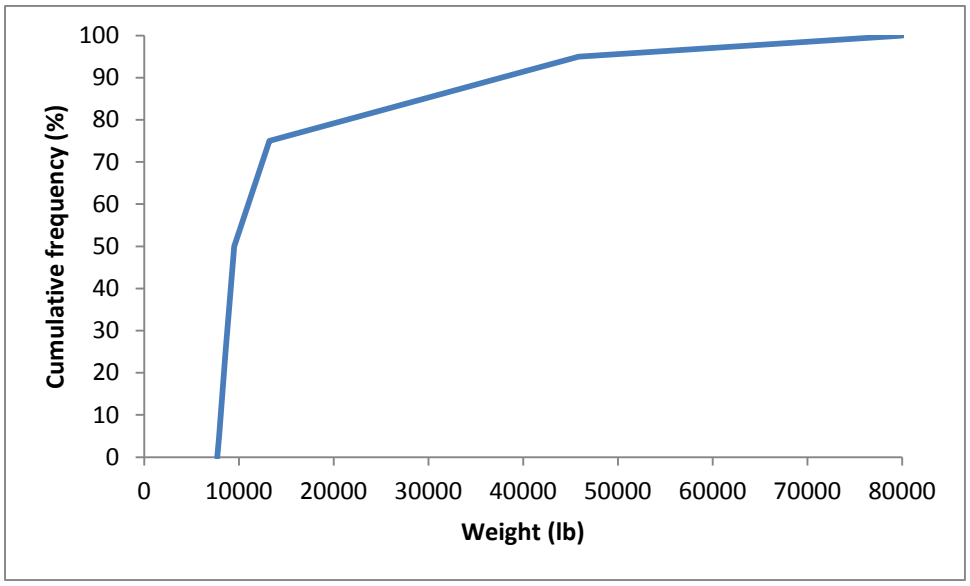

Figure 3.4 Truck weight distribution used in VISSIM model

The power distribution used in the simulation was calculated by using the 85th percentile weight of 29,531 lb from figure 3.4 and the VISSIM power-to-weight ratio constraints of 7 kW/t (0.00426 hp/lb) and 30 kW/t (0.0183 hp/lb). That is, power was assumed to be uniformly distributed between 125 hp and 540 hp.

3.2.4 Calibration Parameters

Microscopic traffic simulation models have default parameters that might not be representative of the conditions that prevail at a particular site of interest. It is therefore important that these default values are adjusted for a given project so that the output of the simulation model accurately reflects observed traffic conditions. Proper calibration is essential if the model is to accurately replicate both the supply and demand characteristics of the transportation system, as well as their interactions, and also if the model is to be perceived as credible to engineers and planners, as well as the general public.

VISSIM has an extensive number of driver behavior (e.g. car-following model, lane-changing model, lateral placement model, and reaction to signal control) and vehicle performance (e.g. maximum and desired acceleration/deceleration functions, weight and power distributions) parameters that can be adjusted by the user to ensure that the simulated output matches field data. Seventeen parameters were identified as the most relevant to this study and were thus selected for calibration. These parameters were: (i) standstill distance; (ii) headway time; (iii) "following" variation; (iv) threshold for entering "following"; (v-vi) "following" thresholds; (vii) speed dependency of oscillation; (viii-x) oscillation acceleration, standstill acceleration, and acceleration at 80 km/h; (xi) emergency stopping distance; (xii) waiting time before diffusion; (xiii) safety distance reduction factor; and (xiv-xvii) desired acceleration and deceleration function coefficients.

3.2.4.1 Car-following parameters

VISSIM includes two versions of the Wiedemann "psycho-physical" car-following and lane-changing models: urban driver and freeway driver. The car-following mode of the freeway driver model was used in this study. The model has ten tunable parameters: CC0, CC1, …, CC9.

A brief description of each car-following parameter and the range of values considered reasonable for this study are provided below:

i. Standstill distance (CC0): Defines average desired distance between stopped vehicles. Range = [1.0, 1.7] m. Default = 1.5 m.

ii. Headway time (CC1): Defines the time headway that a driver desires to keep at a given speed. Range = [0.30, 0.80] s. Default = 0.50 s.

iii. Following variation (CC2): Defines longitudinal variation while a driver follows another vehicle. Range = [2.0, 6.0] m. Default = 4.0 m.

iv. Threshold for entering "following" mode (CC3): Defines when a driver starts to decelerate before reaching the desired safety distance. Range = [-12, -4] s. Default = -8 s.

v. Following thresholds (CC4 and CC5): Define the speed difference between the leading and trailing vehicles. Range of CC4 = [-0.50, -0.20] m/s. Default = -0.35 ms^{-1}. Range of CC5 = [0.20, 0.50] m/s. Default = 0.35 ms^{-1}.

vi. Speed dependency of oscillation (CC6): Defines the distance on speed oscillation. Larger values result in greater speed oscillation. Range = [7.00, 15.00] rad^{-1}. Default = 11.44 rad^{-1}.

vii. Oscillation acceleration (CC7): Defines actual acceleration during the oscillation process. Range = [0.15, 0.40] ms^{-2}. Default = 0.25 ms^{-2}.

viii. Standstill acceleration (CC8): Defines the desired acceleration when a vehicle starts from a standstill condition. Range = [2.0, 5.0] ms^{-2}. Default = 3.5 ms^{-2}.

ix. Acceleration at 80 km/h: Defines the desired acceleration at 80 km/h. Range = [0.5, 2.5] ms^{-2}. Default = 1.5 ms^{-2}.

Other parameters that were included in the model calibration process were:

- Emergency Stop Position: For a vehicle following its route, the emergency stop position defines the last possible position from which a lane change can be made. If the lane change is not possible because of high traffic volumes, the vehicle will stop at this point and wait for an acceptable gap to do so. The default is 5.0 m. A range of 2.0 m to 7.0 m was considered as reasonable for this study.
- Waiting Time before Diffusion: The "waiting time before diffusion" variable defines the maximum amount of time that a vehicle can remain at the emergency

stop position waiting for a gap to change lanes in order to stay on its route. When this time is reached the vehicle is taken out of the network (diffusion). The default waiting time in VISSIM is 60 s. Values within the range of 20 s to 60 s were used in this study.

- Safety Distance Reduction Factor: This variable defines the aggressiveness of drivers during a lane change. The factor accounts for: (i) the safety distance of the trailing vehicle in the new lane for the decision of whether or not to change lanes; (ii) the own safety distance during a lane change; and (iii) the distance to the leading (slower) lane changing vehicle (PTV AG 2011). During any lane change, the resulting shorter safety distance is calculated as the product of the original safety distance and the reduction factor. The default factor is 0.6, which means the safety distance is reduced by 40% during a lane change. Safety distance reduction factors in the range of 0.4 to 0.7 were considered reasonable for this study.
- Desired Acceleration and Desired Deceleration Functions: In VISSIM, the acceleration and deceleration of vehicles is modeled as a function of the current speed. Two acceleration functions and two deceleration functions are used to represent the differences in a driver's behavior. Separate functions are defined for each vehicle type. Each function consists of three curves representing the minimum, mean, and maximum values. The maximum acceleration function defines the maximum technically feasible acceleration. This function is regarded only if an acceleration exceeding the desired acceleration is required to keep the

speed on slopes. The desired acceleration function defines the acceleration for all other situations.

- The maximum deceleration function defines the maximum technically feasible deceleration. The value at a given speed is adjusted on slopes by 0.1 m/s^2 for each percent of positive gradient and -0.1 m/s^2 for each percent of negative gradient. The desired deceleration function is used in conjunction with parameters of the car-following model to simulate the deceleration behavior of vehicles.

The default acceleration/deceleration curves for simulating truck movements in VISSIM are based on data from Western Europe and might not be directly applicable to modeling the U.S. truck fleet (PTV AG 2011). Consequently, this study considered the desired acceleration and deceleration functions as unknowns that must be estimated as part of the model calibration process. The default maximum acceleration and deceleration functions were not modified because they are considered the "maximum technically feasible" and are probably "the most reliable current source of this information" (PTV AG 2011; Middleton and Lord, 2012).

Fig. 3.5 shows a plot of the default desired acceleration function for trucks used in VISSIM.

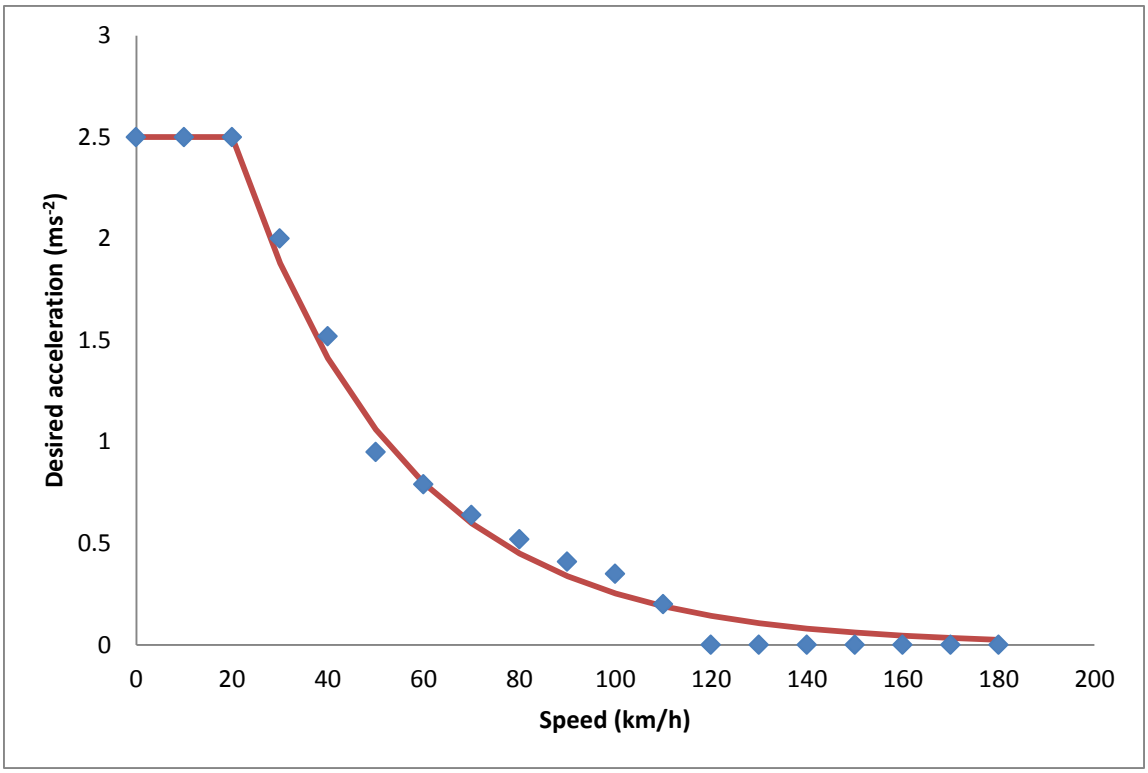

Figure 3.5 Mean desired acceleration function in VISSIM

Also shown on the plot is the line of "best-fit" through the VISSIM default values modeled with the piece-wise function shown in the equation:

$$f(x) = \begin{cases} 2.5 & 0 \le x < 20 \\ 2.5e^{-0.03(x-20)} & x \ge 20 \end{cases} \tag{3.1}$$

where,

f = the desired acceleration (ms^{-2}) at speed x (km/h).

Equation 3.1 appears to be a reasonable fit to the default data points (mean square error = 0.79). Consequently, the piece-wise function shown in equation 3.2 was assumed to be a reasonable functional form for modeling the relationship between truck acceleration and speed.

$$f(x) = \begin{cases} k_1 & 0 \le x < c \\ k_1 e^{-k_2(x-c)} & x \ge c \end{cases} \tag{3.2}$$

where,

x = truck speed, km/h;

$f(x)$ = desired acceleration at speed x, ms^{-2};

k_1 = scale parameter, ms^{-2};

k_2 = growth rate, h/km;

c = shift parameter, km/h.

In this study, values of parameters k_1, k_2, and c were treated as unknowns that must be estimated as part of the model calibration process. The VISSIM default and the ranges considered reasonable for this study were: Default k_1 = 2.5 ms^{-2}, Range = [1.0, 5.0] ms^{-2}; Default k_2 = 0.029 h/km, Range = [0.010, 0.050] h/km; Default c = 20 km/h, Range = [10, 30] km/h.

The desired deceleration function of VISSIM is modeled as a constant function of the form:

$$f(x) = \alpha \qquad \forall\ x \in \{0 \le x \le 240\, km/h\} \tag{3.3}$$

The default value is $\alpha = -1.25$ ms^{-2}. The range of values considered in this study was $\alpha = [-1.50, -1.05]$ ms^{-2}.

3.2.5 Calibration Procedure

The GA was selected as the optimization tool for this study because: (i) it has been shown that it has advantages in dealing with non-convexity, locality, and the complex nature of transportation optimization; (ii) it searches over multiple locations and therefore has a very high likelihood of identifying a globally optimal solution; (iii) a genetic algorithm only requires the evaluation of an objective function, with no need for gradient information; (iv) it is rather robust when used in conjunction with simulation model calibration and can overcome the combinatorial explosion of model parameters (Mitchel 1998; Kim and Rilett 2004; Yun and Park 2005).

Genetic algorithms are stochastic algorithms whose search methods are based on the evolutionary ideas of natural selection, or, the survival of the fittest. The GA calibration procedure starts with a randomly generated set or population of chromosomes, each of which represents a potential solution to the problem under consideration, in this case a combination of simulation model parameters. The individual chromosomes undergo selection in the presence of variation-inducing operators such as mutation and crossover. A fitness function is used to evaluate each chromosome. Reproductive success varies with fitness. The processes of evaluation, selection, crossover, and mutation are repeated until a satisfactory solution is found. The main features of the GA calibration procedure are described in the following sections. A simplified flowchart of the main components is shown in figure 3.6. The GA was coded in the Perl programming language and integrated with VISSIM.

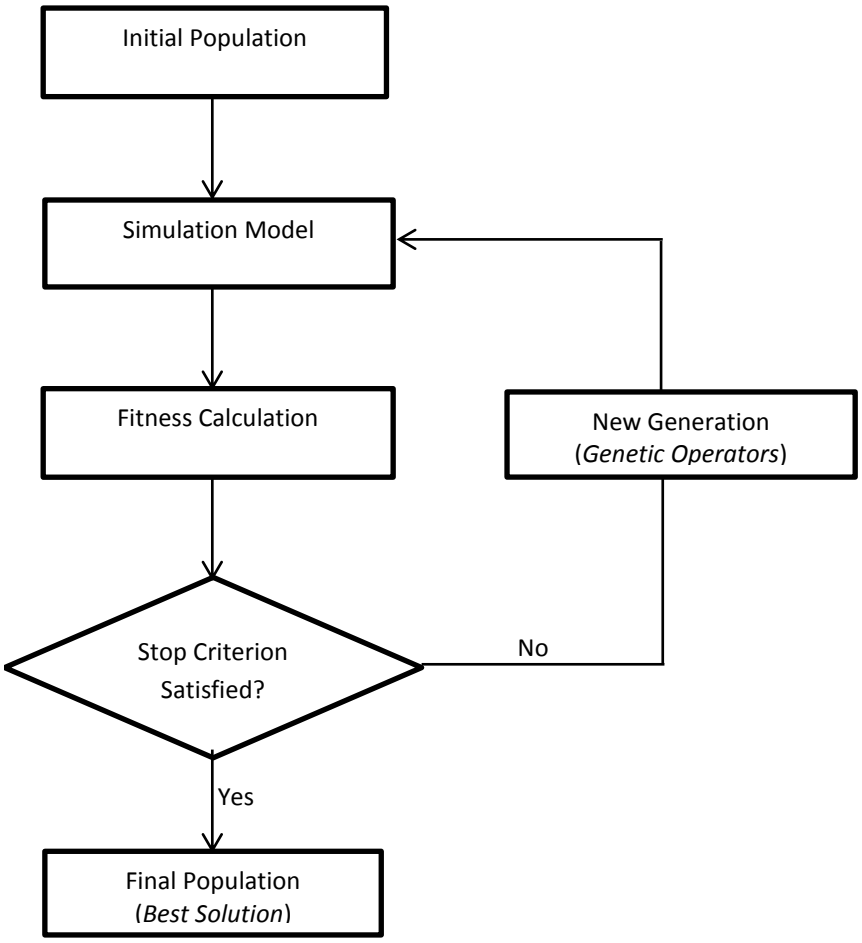

Figure 3.6 Flowchart of Genetic Algorithm calibration process

3.2.5.1 Initial population

An initial population of 50 candidate solutions, or chromosomes, was used. Each chromosome is a string containing model parameter values (genes). In order to avoid any bias at the beginning of the evolutionary run, each of the 18 genes (parameters) defining a chromosome (candidate solution) was initialized with a random number within the predefined search space limits, described in the previous section. Additionally, the desired acceleration values implied by each set of k_1, k_2, and c parameter values were tested for reasonableness by comparing them to the bounds provided for the maximum acceleration function. Combinations of the k_1, k_2, and c

parameter set that resulted in acceleration values outside these bounds were not used, and the corresponding chromosome was rejected. This procedure was repeated until 40 feasible chromosomes were identified.

3.2.5.2 Simulation

A VISSIM simulation model was constructed with the input parameters described in section 3.2.3. The Perl control program was called to run the simulation for each of the 40 chromosomes. The time period for each simulation run was one hour, with the initial 15 minutes as "warm-up" time; performance data was collected over the subsequent 30-minute period. As noted earlier, the main outputs collected at the end of every run were average truck speeds at 200 ft intervals along the roadway.

3.2.5.3 Fitness calculation

The quality of the solution provided by each chromosome was evaluated using a fitness function. The function used in this study was the mean absolute percentage error (MAPE), which measures the average discrepancy between simulated and observed waiting times, and is given by:

$$MAPE_j = \frac{100}{m} \sum_{i=1}^{m} \left| \frac{TSIM_{ij} - TOBS_i}{TOBS_i} \right| \tag{3.3}$$

where,

$MAPE_j$ = estimated *MAPE* using chromosome *j* (%);

TSIMij = simulated average speed at station *i* using chromosome *j* (mi/h);

TOBSi = observed average speed at station *i* (mi/h);

m = number of stations considered (*m* = 14).

3.2.5.4 Stop criterion

The stopping criteria used was a preset maximum number of generations (iterations) of the GA equal to 100, or an MAPE of 10% or less. Once one of these criteria was met, the chromosome with the smallest MAPE was selected as the best solution.

3.2.5.5 New generation

An "elitist" selection strategy and the genetic operators of crossover and mutation were used to produce a new generation of chromosomes. If the stop criterion was not satisfied, then following the evaluation of the fitness function for the current generation of chromosomes, a subset of chromosomes was selected for use as parents in succeeding generations. The chromosomes were chosen according to their fitness value. An elitist selection strategy was used to ensure that the best chromosomes were preserved at each generation. This involved directly placing the best two chromosomes (as determined from their fitness values) into the next generation. A stochastic roulette wheel selection scheme was used for the process of choosing parents for subsequent recombination. That is, each chromosome was assigned a slice on a Monte Carlo-based roulette wheel proportional to its fitness. The "wheel" was spun in a simulated fashion 38 times, and the parents were chosen based on where the "pointer" stopped (Gentle et al. 2004).

The crossover operator was used to create offspring of the pairs of parent chromosomes identified from the selection step. The offspring could be either a blend or a clone of the two parents, depending on a pre-specified probability of crossover. The crossover probability used was 0.75. If no crossover took place, then the two offspring were clones of the two parents. On the other hand, if crossover occurred, then the two offspring were formed by an interchange of

genetic material between the two parents. This was accomplished by swapping parts based on a randomly chosen splice point on the pair of parent chromosomes.

While keeping the two elite chromosomes, the remaining 38 chromosomes were replaced by the offspring produced from crossover. Because the initial population might not contain enough variability to find the solution via crossover alone, a mutation operator was used to introduce some variability in the new set of chromosomes by randomly changing genes with probability P_m. The mutation rate (Pm) was allowed to vary dynamically (between 0.0005 and 0.25) in the course of the evolutionary run. That is, the algorithm monitored the degree of convergence and adjusted the mutation rate accordingly. This was done to increase the chance that the algorithm did not converge prematurely to a local optimum.

The resulting population was the new generation of chromosomes. The simulation was re-run with each member of this new generation and the processes of fitness evaluation, selection, crossover, and mutation were repeated until the stop criterion was satisfied.

3.2.6 Calibration Results

The lowest value of the MAPE after 100 iterations of the GA for a population of size 50 was 6.5%. The VISSIM parameter values that corresponded to this MAPE value were:

- Standstill distance (CC0): 1.1 m
- Headway time (CC1): 0.3 s
- "Following" variation (CC2): 2.6 m
- Threshold for entering "following" mode (CC3): -9.0 s
- "Following" threshold 1 (CC4): -0.29 ms^{-1}
- "Following" threshold 2 (CC5): 0.30 ms^{-1}
- Speed dependency of oscillation (CC6): 11.95 rad^{-1}

- Oscillation acceleration (CC7): 0.20 ms^{-2}
- Standstill acceleration (CC8): 2.78 ms^{-2}
- Acceleration at 80 km/h (CC9): 1.83 ms^{-2}
- Waiting time before diffusion: 20.5 s
- Emergency stop position: 4.7 m
- Safety distance reduction factor: 0.41
- Desired deceleration function (α): -1.42 ms^{-2}
- Desired acceleration function:
    - Scale parameter (k_1) 3.01 ms^{-2}
    - Growth rate (k_2) 0.036 h/km
    - Shift parameter (c) 23.9 km/h

A comparison of the speed profiles obtained from the field data, the uncalibrated VISSIM model (default parameters), and the calibrated model are provided in figure 3.7.

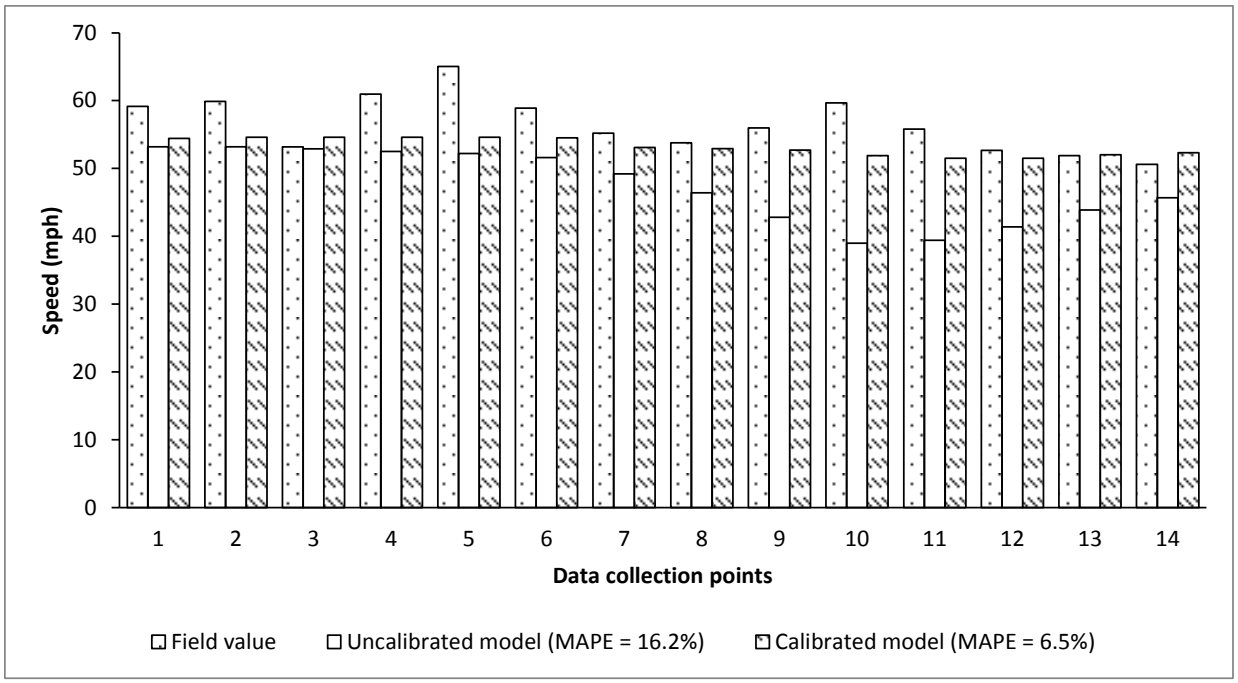

Figure 3.7 Observed and simulated speed profiles at calibration stations

As may be seen in the figure, the calibrated model compared much better with the field values (MAPE = 6.5%) than did the uncalibrated model (MAPE = 16.2%). On average, the uncalibrated model indicated much lower average speeds than were observed in the field. It may also be seen from the distribution of error rates (see figure 3.8) that the calibrated model compared much better with the field values than did the uncalibrated model. Only two out of the 14 stations or data collection points in the uncalibrated model had errors of 10% or less compared to 11 stations in the calibrated model. The largest error in the calibrated model was 16.0%, whereas five stations had errors greater than 15% in the uncalibrated model with the largest error being 34.6%.

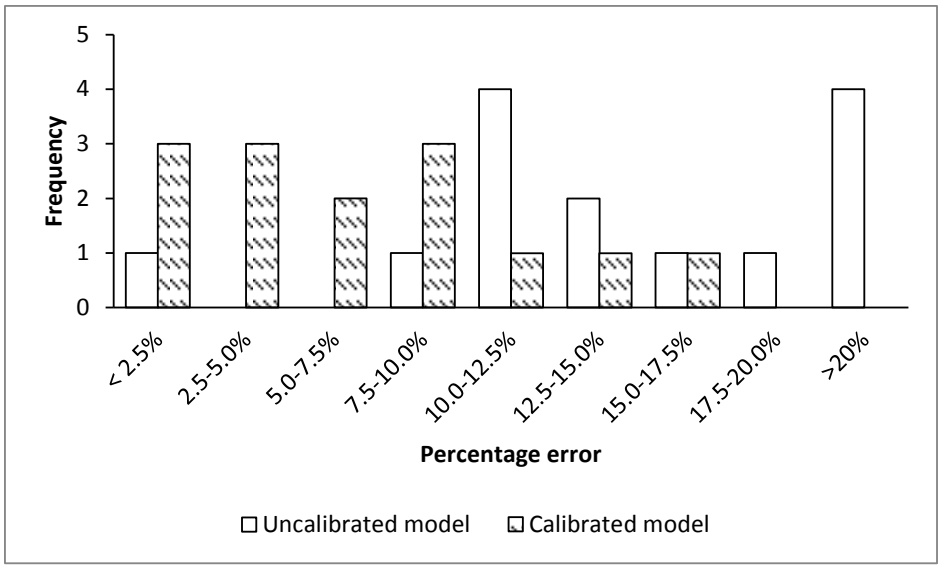

Figure 3.8 Error distributions in calibrated and uncalibrated models

It should be noted that an MAPE of 11.3% was obtained when only the calibrated driving behavior (i.e. car-following and lane-changing) parameters were used with the vehicle performance parameters maintained at their default values. Thus, not incorporating the desired acceleration and deceleration functions increased the average discrepancy between observed and simulated data from 6.5% to 11.3%. These results highlight the importance of calibrating both the vehicle performance and the driver behavior parameters of traffic microsimulation models to local conditions.

It is also worth noting that a calibrated simulation model that results in behavior not exhibited in the field cannot be credible. Consequently, an animation of the calibrated model was also viewed to ensure that the final parameters did not simply produce performance measures close to those observed in the field but that the resulting model was visually reasonable and consistent with observed behavior.

3.2.7 Model Validation

Finally, the calibrated model was validated with speed profile data from nine other stations that were not used for calibration. A comparison of the simulated speed profiles and the observed profiles at these stations is provided in figure 3.9.

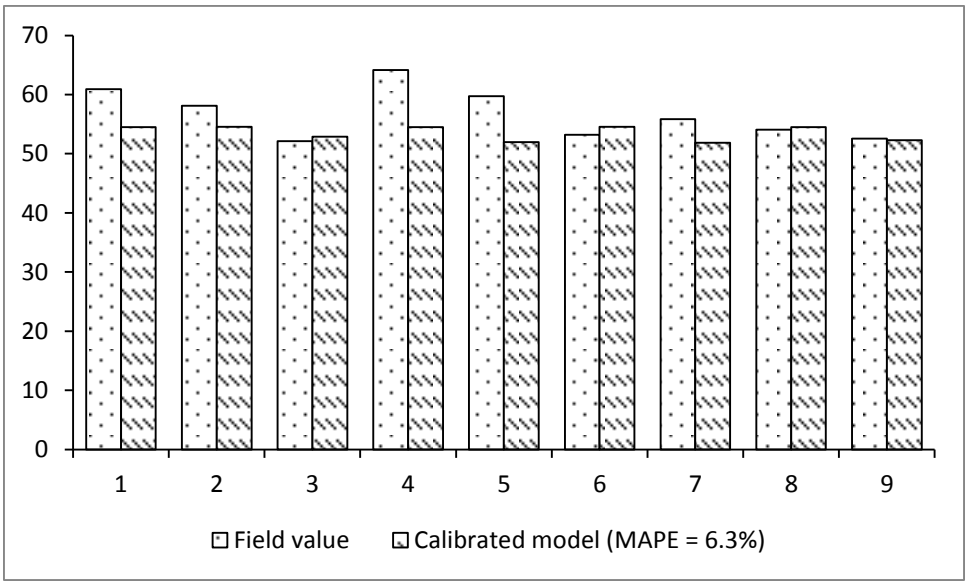

Figure 3.9 Observed and simulated speed profiles at validation stations

As may be seen in figure 3.9, the plots suggested a good match (MAPE = 6.3%) between the observed and simulated speed profiles. Therefore, the calibrated parameter values seemed appropriate for this study.

Chapter 4 Summary and Conclusions

Microscopic traffic simulation models are more and more frequently being used for the analysis of complex transportation problems. The ability to create a simulation model that can accurately recreate real-world situations now and in the near future is an important step towards safer and more efficient transportation networks. With this model, and with the creation of other, similar models, decision makers will have access to more accurate information that can lead to improved decision-making in regards to potential changes to the network, resulting in cost savings in time, money, and, potentially, lives.

As the economy expands, the amount of freight that is shipped in the U.S. is expected to increase dramatically. This increased tonnage will be carried by the existing transportation network, including airports, seaports, railways, and interstate highways. Being able to model the effects of the increased demand that will be placed on the roadways will be critical in the management and maintenance of these roadways. The increased demand and use of heavy vehicles will have large effects on operational characteristics, and must be considered when designing and evaluating potential changes to a network. The analytical procedures of the Highway Capacity Manual do not adequately provide guidance for roadway sections with heavy vehicle volumes in excess of 25%. Therefore, using traffic micro-simulation models to effectively recreate and replicate those situations will continue to become increasingly important. It is already an issue in parts of I-80 in Nebraska, where heavy vehicle volumes sometimes constitute up to 60% of the total traffic and the percentage of heavy vehicles will only increase.

This paper developed a traffic micro-simulation framework that can be used to perform consistent, detailed analyses of highway networks with significant heavy traffic volumes. The genetic algorithm-based model calibration and validation procedure developed in this research

appeared to be effective in the calibration and validation, for VISSIM, of freight networks. The procedure was successfully applied to the calibration of traffic operations on a 2,950 ft section of I-80 in California. For this case study, the calibrated model provided more realistic results than did the uncalibrated model (default values), reaffirming the importance of the calibration of microscopic traffic simulation models.

References

Alexiadis, V., K. Jeannotte, and A. Chandra. 2004. "Traffic analysis toolbox: Volume I: Traffic analysis tools primer." *Publication FHWA-HRT-04-038*, Washington, D. C., Federal Highway Administration, U.S. Department of Transportation.

American Association of State Highway and Transportation Officials (AASHTO). 2011. "A policy on geometric design of highways and streets." Washington D.C.: author.

Boxill, S. A., and L. Yu. 2000. "An evaluation of traffic simulation models for supporting ITS development." *Report No. SWUTC/00/167602-1*. Houston, TX, Center for Transportation Research and Training, Texas Southern University, Houston, TX.

Chatterjie, I. 2008. "Replication of freeway work zone capacity values in a microscopic simulation model." Master's Thesis, University of Missouri-Columbia, MO.

Cunha, A. L., J. E. Bessa, and J. R. Setti. 2009. "Genetic algorithm for the calibration of vehicle performance models of microscopic traffic simulators." *Proceedings of the 14th Portuguese Conference on Artificial Intelligence*. Lecture Notes in Artificial Intelligence (LNAI): 3-14.

Druitt, S. 1998. "An introduction to microsimulation." *Traffic Engineering and Control*, 39, no. 9: 480-483.

Fambro, D. B., K. Fitzpatrick, and R. J. Koppa. 1997. "NCHRP report 400: Determination of stopping sight distances." Washington, D. C., Transportation Research Board, National Research Council.

Gillespie, T. D. 1986. "Start-up accelerations of heavy trucks on grades." *Transportation Research Record*, 1052: 107-112.

Harwood, D. W., D. J. Torbic, K. R. Richard, W. D. Glauz, and L. Elefteriadou. 2003. "NCHRP report 505: Review of truck characteristics as factors in roadway design." TRB, National Research Council, Washington, D.C.

Harwood, D. W., J. M. Mason, W. D. Glauz, B. T. Kulakowski, and K. Fitzpatrick. 1990. "Truck characteristics for use in highway design and operation: volume 1." *Report No. FHWA-RD-89-226*. Kansas City, MO, Midwest Research Institute.

Holman, D.B. 2012. "A microsimulation analysis on the impact of different bridge deck replacement methods on travel times and road user costs." (Master's Thesis, Auburn University, Auburn, Alabama).

Husch, D., and J. Albeck. 1997. *SimTraffic 6: User guide*. Albany, CA: Trafficware.

Hutton, T. D. 1970. "Acceleration performance of highway diesel trucks." *SAE Technical Paper No. 70664*, Society of Automotive Engineers. Available from http://papers.sae.org/700664/

Institute of Traffic Engineers (ITE) 1992. *Traffic engineering handbook. 4th Edition*.

Kim, K-O., and L. R. Rilett. 2004. "A genetic algorithm based approach to traffic micro-simulation calibration using ITS data." *Preprint 04-3036*, Transportation Research Board, 83rd Annual Meeting, Washington, D.C.

Mannering, F. L., S. S. Washburn, and W. P. Kilareski. 2009. *Principles of highway engineering and traffic analysis*. *4th Edition*. New York: John Wiley and Sons.

Mid-Ohio Regional Planning Commission (MORPC) 2004. "Central Ohio freight fact book." http://www.morpc.org/pdf/Truck_Freight.pdf. Accessed, March 13, 2012.

Middleton, D. and D. Lord. "Safety and operational aspects of exclusive truck facilities." https://ceprofs.civil.tamu.edu/dlord/Papers/Safety_Truck_Roadways_Middleton-Lord.pdf. Accessed, January 22, 2012.

Mitchel, M. 1998. *An introduction to genetic algorithms*. Cambridge, MA: MIT Press.

Next Generation Simulation (NGSIM). http://ngsim-community.org/

Olson, P. L., D. E. Cleveland, P. S. Fancher, L. P. Kostiyniuk, and L. W. Schneider. 1984. "NCHRP Report 270: Parameters affecting stopping sight distance." Washington, D.C., TRB, National Research Council.

Owen, L. E., Y. Zhang, L. Rao, and G. McHale. 2000. "Traffic flow simulation using CORSIM." In *Proceedings of the 2000 winter simulation conference*. J. A. Joines, R. R. Barton, K. Kang, and P. A. Fishwick (eds). ITT Industries, Dept. of Intelligent Transportation Systems; National University of Singapore, Dept. of Electrical Engineering, Singapore, pp. 1143-1147.

Pas, E. I. 1996. "Recent advances in activity-based travel demand modeling." Presented at the TMIP Conference on Activity-Based Travel Forecasting, New Orleans, LA, June 2-5.

PTV AG. 2011. *VISSIM 5.30-05 user manual*.

Pine, J. L. (ed.). 1992. *Traffic Engineering Handbook, 5th Edition*. Englewood, NJ: Prentice-Hall, Inc.

U.S. Census Bureau. 1999. "2002 Economic census: Vehicle inventory and use survey." http://www.census.gov/prod/www/abs/ec2002trans-vius-geo.html

U.S. Department of Commerce, Bureau of Economic Analysis. "National income and product accounts table." http://www.bea.gov/national/. Accessed Nov. 17, 2011

U.S. Department of Transportation, Federal Highway Administration. 2010. "Freight facts and figures." http://www.ops.fhwa.dot.gov/freight/freight_analysis/nat_freight_stats/docs/10factsfigures/index.htm. Accessed Nov 11, 2011.

PTV AG. 2011. *VISSIM 5.30 user manual*.

Yun, I. and B. Park. 2005. "Estimation of dynamic origin destination matrix: A genetic algorithm approach." *Proceedings of the 8th International IEEE Conference on Intelligent Transportation Systems*, Vienna, Austria.