NDOR

Nebraska
Department of Roads

State of Nebraska
Department of Roads
Materials and Research Division

Materials Sampling Guide

MATERIALS SAMPLING GUIDE
INDEX OF SECTIONS

SECTION	PAGE NUMBER
SECTION 1- GENERAL INSTRUCTIONS & DEFINITIONS	
1. General Instructions and Definition	1-1
2. Consultant Inspection Instructions	1-2
SECTION 2- ASPHALTIC MATERIALS	
1. Asphaltic Oils	2-1
2. Asphalt, Emulsified Anionic & Cationic	2-1
3. Performance Grade Binder	2-2
SECTION 3- ASPHALTIC CONCRETE	
1. Asphaltic Concrete Type SP1-SP5, SPR	3-1
2. Asphaltic Concrete Type SPS	3-1
3. Asphaltic Concrete Type HRB	3-1
4. Asphaltic Concrete Type SPL	3-1
5. Asphaltic Concrete Type OGFCCRM,OGFC,GGCRM,GGCCRM LV,LC,RLC	3-2
6. Asphaltic Concrete Mixtures	3-2
7. Asphaltic Concrete Pavement	3-2
8. Hydrated Lime or Type S Lime	3-3
SECTION 4- ASPHALTIC CONCRETE MATERIALS	
1. Mineral Aggregate (Gravel, Sand, Sand-Gravel)	4-1
2. Mineral Aggregate (Crushed Rock)	4-1
3. Crushed Rock (Screenings, Man-Sand)	4-1
4. Quartzite & Granite	4-1
5. Quartzite, Chat & Granite (Screenings, Man-Sand)	4-1
6. Crushed Mineral Aggregate or Chat for Microsurfacing	4-2
7. Mineral Filler	4-2
SECTION 5- COLD MIX BITUMINOUS SURFACING & BASE	
1. Subgrade Sand	5-1
2. Mineral Filler	5-1
3. Combined Materials (Sand & Filler)	5-1
4. Bituminous Aggregates (Includes Mixed In Place Bituminous Surfacing)	5-2
5. Mineral Aggregates (Experimental Bituminous Mixture)	5-2
6. Mineral Filler (Experimental Bituminous Mixture)	5-2
SECTION 6- GRAVEL & CRUSHED ROCK FOR SURFACING	
1. Gravel for Surfacing	6-1
2. Crushed Rock for Surfacing	6-1
SECTION 7- MINERAL AGGREGATE FOR ARMOR COAT	
1. Mineral Aggregate for Armor Coat	7-1
2. Chip Seal (Limestone, Dolomite, Granite, Quartzite)	7-1
SECTION 8- CRUSHED ROCK & CRUSHED ROCK SCREENINGS FOR BASE COURSE	
1. Crushed Rock for Base Course	8-1
2. Crushed Rock Screenings for Base Course	8-1

MATERIALS SAMPLING GUIDE
INDEX OF SECTIONS

SECTION	PAGE NUMBER
SECTION 9- GRADING	
1. Embankment (Cohesive & Granular)	9-1
SECTION 10- COMPACTION – SUBGRADE (COHESIVE SOILS)	
1. Subgrade Compaction, Subgrade Reconstruction	10-1
2. Fly Ash	10-2
3. Hydrated Lime or Pebble Quicklime	10-2
4. Subgrade Soil & Hydrated Lime or Pebble Quicklime for Mix Design	10-2
SECTION 11- COMPACTION – STABILIZED PORTION OF GRANULAR SUBGRADE	
1. Stabilized Portion of Granular Subgrade	11-1
2. Soil Binder	11-2
SECTION 12- FOUNDATION COURSE (REGULAR & CRUSHED CONCRETE)	
1. Crushed Concrete Foundation Course	12-1
2. All Aggregates & Soil Binder	12-1
3. Bituminous	12-1
4. Aggregate Foundation Course - D	12-2
5. Soil Binder	12-2
6. Foundation Course	12-2
SECTION 13- GRANULAR BASE, GRANULAR FILL, GRANULAR – BACKFILL, SANDBLANKET & MSE WALLS	
1. All Mineral Aggregates & Soil Binder (Experimental Base Course Mixtures)	13-1
2. Mineral Aggregates (Commercial Production)	13-1
3. Coarse Sand	13-2
4. Fine Sand	13-2
5. Soil Binder	13-3
6. Granular Base, Granular Fill, Granular Backfill & Sand Blanket	13-4
7. Stabilized Portion of Granular Base, Granular Fill, Granular Backfill & Sand Blanket	13-5
8. Granular Backfill for Structures	13-6
9. Granular Subdrains	13-7
10. Granular Backfill for Pipe Underdrain	13-7
11. Select & Random Granular Backfill for MSE Walls	13-8
SECTION 14- PORTLAND CEMENT/FLY ASH	
1. Portland Cement	14-1
2. Blended Cement	14-1
3. Fly Ash	14-2
4. Ground Granulated Blast Furnace Slag (GGBFS)	14-2
5. Silica Fume	14-2

SECTION	PAGE NUMBER
SECTION 15- PORTLAND CEMENT CONCRETE FOR PAVEMENT, BASE COURSE, & PAVEMENT PATCHING	
1. Coarse Aggregate – Gradation & Quality	15-1
2. Fine Aggregate Sand Gravel – Gradation & Quality	15-1
3. All Aggregates – Moisture	15-2
4. Mixing Water – Quality	15-2
5. Plastic Concrete – Air Content & Slump	15-2
6. Concrete Test Cylinders – Compressive Strength	15-2
7. Concrete Cores – Slab Thickness	15-3
8. PCC Pavement	15-3
9. Concrete Curing Materials	15-4
A) Liquid Compounds	15-4
B) Plastic Film	15-4
C) Burlap Cloth	15-4
10. Reinforcement Bars (Including Dowel Bars)	15-4
11. Welded Steel Wire Fabric	15-4
12. Deformed Metal Joint Material	15-4
13. Elastomeric Compression Joint Seal	15-4
14. Lubricant Adhesive for Elastomeric Compression Joint Seals	15-4
15. Epoxy Compound	15-4
16. Joint Seal Fillers	15-4
A) Cold Poured Type	15-4
B) Hot Poured Type	15-4
17. Load Transfer Devices for Reinforced Concrete Pavement Joints	15-5
18. Preformed Joint Filler	15-5
A) Non – Extruding	15-5
B) Bituminous	15-5
C) Sponge Rubber	15-5
19. Pressure Relief Joint Filler, Preformed Flexible Polyurethane	15-5
20. Air – Entraining Agent	15-5
21. Calcium Chloride	15-5
SECTION 16- PORTLAND CEMENT CONCRETE FOR STRUCTURES, CULVERTS, & MISCELLANEOUS CONSTRUCTION	
1. Coarse Aggregate – Gradation & Quality	16-1
2. Fine Aggregate Sand Gravel – Gradation & Quality	16-1
3. Lightweight Aggregate – Gradation & Quality	16-2
4. All Aggregates – Moisture	16-2
5. Mixing Water – Quality	16-2
6. Plastic Concrete – Air Content, & Slump	16-3
7. Lightweight Concrete – Air Content, Slump & Unit Weight	16-3
8. Concrete Test Cylinders – Compressive Strength	16-4
9. Concrete Curing Methods	16-5
A) Liquid Compounds	16-5
B) Plastic Film	16-5
C) Burlap Cloth	16-5
10. Reinforcement Bar (Including Dowel Bars)	16-5
11. Welded Steel Wire	16-5
12. Air – Entraining Agent and Concrete Admixtures	

MATERIALS SAMPLING GUIDE
INDEX OF SECTIONS

SECTION	PAGE NUMBER
SECTION 17- GUARD RAIL	
1. Beam Guard Rail	17-1
A) Beam Element	17-1
B) Steel Posts, End Posts, Special Posts, & Adapter Plates	17-1
C) End Anchor Assembly & Breakaway Terminal Section	17-1
D) Miscellaneous Hardware, Bolts, Washers, etc.	17-1
E) Wood Guard Rail Posts & Blocks	17-1
F) Insert Assembly	17-1
2. Cable Guard Rail	17-1
A) Cable	17-1
B) Posts & Hook Bolts	17-1
C) Tension Spring Assemblies	17-1
D) Anchor Assemblies	17-1
SECTION 18- FENCE MATERIALS	
1. Barbed Wire	18-1
2. Chain Link	18-1
3. Fence Fasteners & Ties	18-1
4. Fittings & Hardware	18-1
5. Staples	18-1
6. Steel “T” Line Posts	18-1
7. Tension Wire	18-1
8. Tubular “H” & “C” Sections for Post Braces, Top Rail, etc.	18-1
9. Wooden Posts	18-1
10. Woven Wire	18-1
SECTION 19- CULVERT PIPE, DRAIN TILE, SEWER PIPE, SLOPE DRAINS, ETC.	
1. Culvert Pipe	19-1
A) Zinc Coated Galvanized Steel, Aluminum Coated Steel, Polymer Coated Steel, & Plastic	19-1
a) Culverts (all Shapes)	19-1
b) Culverts (Plastic)	19-1
c) Underdrains	19-1
d) Flared End Sections	19-1
e) Structural Plate Pipe	19-1
B) Concrete	19-1
a) Culverts (all Shapes)	19-1
b) Flared End Sections	19-1
2. Drain Tile	19-1
A) Concrete	19-1
B) Bituminous Fiber	19-1
3. Sewer Pipe	19-2
A) Ductile Iron Pipe & Fittings	19-2
B) Plastic	19-2
C) Reinforced Concrete	19-2
4. Slope Drains (Metal)	19-2
5. Related Materials	19-2
A) Sealing Compound for Concrete Pipe Joints	19-2
B) Bituminous Plastic Cement	19-2
C) Sewer Joint Compound	19-2
D) Sewer Pipe Gasket s	19-2
E) Flexible Pipe Joints	19-2
F) Post Applied Coatings	19-2

MATERIALS SAMPLING GUIDE
INDEX OF SECTIONS

SECTION	PAGE NUMBER
SECTION 20- BRIDGE MATERIALS	
1. Aluminum Filled Resilient Sealing Compound	
2. Asphalt Plank	20-1
3. Lock – Pin & Collar Fasteners (High Strength Steel)	20-1
4. Bridge Deck Drainage System	20-1
5. Caulking & Sealing Compounds	20-1
6. Deck Joint Seal	20-1
7. Form Insulation	20-1
8. Galvanized Sheet Metal	20-1
9. Galvanized Steel Wire Strand	20-1
10. Lead Sheet	20-1
11. Bolts, Nuts, & Washers	20-2
A) Anchor	20-2
a) High Tensile	20-2
b) Low Carbon (Common)	20-2
c) Swedge	20-2
B) Structural Fasteners	20-2
a) High Tensile (Regular & Weather Resisting Type)	20-2
b) Low Carbon (Common)	20-2
12. Elastomeric Bearings	20-3
A) Elastomeric Bearing Pads – Neoprene or Neoprene with Steel Shims	20-3
B) Bearing Pads – Cotton Duck	20-3
13. Fixed & Expansion Bearings, TFE Type	20-3
14. Confined Elastomeric Bearings (Pot Bearings)	20-3
15. Strip Seal	20-3
16. Epoxy Compounds	20-3
17. Grouting Materials	20-3
A) Non – Shrink Grout	20-3
B) Epoxy Type	20-3
18. Joint Sealing Fillers	20-3
A) Cold Poured Type	20-3
B) Hot Poured Type	20-3
19. Paint	20-3
20. Preformed Joint Filler	20-3
21. Pressure Relief Joint Filler, Preformed Flexible Polyurethane	20-4
22. Waterstop	20-4
23. Wood Piling	20-4
24. Wood Preservatives	20-4
25. Zinc (sheet)	20-4
26. Reinforcement Bars	20-4
A) Bars (Including Dowel bars)	20-4
B) Mechanical Splices	20-4
27. Steel	20-4
A) Piling, Sheet Piling, Shells for Cast in Place Piling &	20-4
Crossbracing for Piling	20-4
B) Structural	20-4
a) Substructure	20-4
b) Superstructure	20-4
28. Precast & Prestressed Concrete Units	20-4
29. Prestressed Steel Wire Strand	20-4
30. Structural Steel for Concrete Girder Bridges	20-4
31. Structural Fasteners for Concrete Girder Bridges	20-5
A) High Tensile (Regular and Weather Resisting Types)	20-5
B) Low Carbon (common)	20-5

MATERIALS SAMPLING GUIDE
INDEX OF SECTIONS

SECTION	PAGE NUMBER
SECTION 21- LIGHTING & SIGNAL MATERIALS	
1. Bolts, Nuts, & Washers	21-1
A) Anchor Bolts for Light, Signal, Span Wires, & Combination Poles	21-1
2. Electrical Items	21-1
A) Cast Iron Frames & Covers for Pull Boxes	21-1
B) Cast Iron Junction Boxes	21-1
C) Conduit	21-1
a) Aluminum	21-1
b) Asbestos Cement	21-1
c) Fiber	21-1
d) Plastic	21-1
e) Steel (Rigid, Flexible)	21-1
f) Rigid Nonmetalic	21-1
D) Light Poles	21-1
a) Conventional Light Poles	21-1
b) High Mast Poles	21-1
c) Signal Standards	21-1
d) Span Wire Poles	21-1
e) Breakaway Base	21-1
E) Ground Rod	21-2
F) Ground Wire	21-2
G) Electrical Wire & Cable	21-2
H) Span Wire, Tie Wire, & Guy Wire	21-2
I) Electrical Equipment	21-2
a) Photo – Electrical Cells	21-2
b) Traffic Signals & Controllers	21-2
c) Transformers	21-2
d) Vehicle Detectors	21-2
e) Luminaires	21-2
f) Circuit Breakers	21-2
g) Fittings & Hardware	21-2
h) Pull Boxes	21-2
J) Galvanized Steel Wire	21-2
K) Grouting Material	21-2
a) Non-Shrink Grout	21-2
b) Epoxy Type	21-2
L) Preformed Joint Filler	21-2
M) Poles (wood)	21-2
N) Polyurethane Foamed Footings	21-3

MATERIALS SAMPLING GUIDE
INDEX OF SECTIONS

SECTION	PAGE NUMBER
SECTION 22- SIGNING MATERIALS	
1. Bolts, Nuts, Washers	22-1
A) High Tensile	22-1
B) Low Carbon (common)	22-1
C) Sign Fasteners	22-1
D) Anchor	22-1
2. Brackets & Fasteners	22-1
A) Aluminum	22-1
B) Steel	22-1
3. Detachable Letters, Numerals, Symbols, & Border	22-1
4. Acrylic Plastic Prismatic Reflectors	22-1
5. Reflective Sheeting	22-1
6. Extrusheet	22-1
7. Sheet Aluminum	22-2
8. Sheet Metal Sleeves	22-2
9. Signing Support Structures	22-2
A) Aluminum	22-2
B) Steel	22-2
C) Wood Post	22-2
10. Sign Supports, Overhead	22-2
A) Main Members	22-2
a) Truss Cords & Bracing	22-2
b) Chord End Flanges	22-2
c) Vertical Post & Bracing	22-2
d) Catwalk Supports & Post Bases	22-2
B) Secondary Members	22-2
a) Catwalk Grating	22-2
b) Railing	22-2
c) Bolts	22-2
d) U-Bolts	22-2
e) J-Bolts	22-2
f) Chains	22-2
g) Miscellaneous Hardware	
SECTION 23- TRAFFIC CONTROL	
1. Barricades & Warning Signs Reflective Materials	23-1
2. Barricade Warning Lights	23-1
3. Thermoplastic Pavement Marking	23-1
4. Glass Beads for Thermoplastic Pavement Marking	23-1
5. Epoxy Pavement Marking	23-1
6. Glass Beads for Epoxy Pavement Marking	23-1
7. Durable Retroreflective Preformed Pavement Marking Tape (Type I,II,III,IV)	23-1
8. Temporary Pavement Marking Tape (Type I,II)	23-1
9. Paint for Temporary Pavement Marking	23-1
10. Glass Beads for Temporary Pavement Marking	23-1
11. Raised Pavement Markers (Plowable, Temporary)	23-1
12. Overlay Markers	23-1
13. Tubular Post	23-1
14. Opposing Lane Dividers	23-2
15. Changeable Message Sign	23-2
16. Flashing Arrow Panel	23-2

MATERIALS SAMPLING GUIDE
INDEX OF SECTIONS

SECTION	PAGE NUMBER
SECTION 24- ROADSIDE DEVELOPMENT & EROSION CONTROL	
1. Erosion Control Fabrics	24-1
2. Rock Riprap	24-1
A) Rock Riprap	24-1
B) Filter Fabric for Rock Riprap	24-1
3. Filter Fabric for Pipe Underdrains	24-1
4. Subsurface Drainage Matting	24-1
5. Geocell Cellular Confinement System	24-1
6. Gabions	24-1
A) Gabion Baskets	24-1
B) Gabion Stone Fill	24-1
7. Revet Mattress	24-1
A) Revet Mattress	24-1
B) Revet Mattress Stone Fill	24-1
SECTION 25- MISCELLANEOUS MATERIALS	
1. Automatic Flood Control Gates	25-1
2. Bar Grates	25-1
3. Bricks	25-1
4. Concrete Filler Blocks	25-1
5. Dampproofing	25-1
A) Asphalt	25-1
B) Asphalt Primer	25-1
6. Flexible Delineators	25-1
7. Delineators	25-1
A) Fasteners	25-1
B) Reflectors	25-1
C) Posts	25-1
8. Glass Fiber Mulch	25-1
9. Gray Iron Castings (Cast Iron Grates, Frames, Covers, etc)	25-1
10. Pipe	25-1
A) Copper	25-1
B) Plastic	25-1
C) Steel	25-2
D) Wrought Iron	25-1
E) Ductile Iron Pipe & Fittings	25-1
11. Cold-Drawn Steel Wire	25-1
12. Prestressed Steel Wire Strand	25-2
13. Right of Way Markers	25-2
14. Waterstop	25-2
15. Wood Products	25-2
A) Lumber	25-2
B) Timber	25-2
16. Hot Pour Joint Sealant	25-2
A) Concrete Surface	25-3
B) Bituminous Surface	25-3
17. Fill Material for Inertial Barrier Modules	25-4
18. Culvert Sandfill	25-4
19. Sand and Sawdust for Absorption Field	25-4
20. Sand for Absorption Field	25-4
21. Sawdust	25-4
22. Combined Sand/Sawdust	25-5

MATERIALS SAMPLING GUIDE
INDEX OF SECTIONS

SECTION	Page Number
SECTION 26- BUILDING MATERIALS	
1. Building Inspection & Acceptance	26-1
SECTION 27- NOTES	27-1 to 12
SECTION 28- QUALITY ASSURANCE PROGRAM FOR CONSTRUCTION	28-A
SECTION 29 – MATERIALS AND RESEARCH DIVISION POLICIES	
1. Precast/Prestressed Concrete Plant Inspection – NDOR Inspector	29-1 to 29-8
2. Precast/Prestressed Concrete Plant Inspection – Plant Inspector	29-9 to 29-14
3. Precast Prestressed Concrete Products – Grooming and Repair Procedures	29-15
4. Acceptance Policy for Cement and Blended Cement	29-16 to 29-20
5. Acceptance Policy for Fly Ash	29-21 to 29-23
6. Acceptance Policy for Ground Granulated Blast Furnace Slag (GGBFS)	29-24 to 29-26
7. Certification of Ready Mix Plants	29-27 to 29-29
8. Pipe Material Policy	29-30 to 29-42
9. Testing, Inspection, & Reporting of Reinforced Concrete Culvert and Sewer Pipe and Concrete Flared End Sections	29-42 to 29-46

Materials Sampling Guide

Table of Contents

Section 1

General Instructions and Definitions

1. General Instructions and Definitions…….. Page 1-1

2. Consultant Inspection Instructions……..Page 1-2

Section 1

General Instructions and Definitions

General Instructions

1) When the sample or testing requirements of a material mentioned in this Materials Sampling Guide differs from those previously listed in our various field manuals, the Materials Sampling Guide will take precedence.

2) The Materials and Research Division pre-approves several materials before they reach the jobsite. When approved or pre-tested stock arrives on the project, certain requirements must be complied with before the material can be used. These requirements are stipulated in this guide.

3) The Materials and Research Division will be notified immediately of any substandard material arriving on a project.

4) It is recognized that in ordinary construction, some tests and observations may not comply with specification requirements. All test results obtained will be reported. The Project Manager will identify what action was taken regarding materials not meeting specification requirements. This disposition will include reasons for use of material, corrective action taken or reference to a check sample.

General Definitions

Certificate of Compliance: Manufacturer's Certificate of Compliance shall state that the material or item meets all requirements. "Blanket-Type" certifications covering many different materials are not acceptable. Each certification will include all pertinent data (i.e. size, quantity, specification number, codes, contractor performing work, project number, project location, etc). An authorized representative of the manufacturing firm will sign the certification.

Certificate of Tests: Manufacturer's Certificate of Tests shall show the required test results and certify that they are correct. In some instances, such as steel for reinforcement, the process of manufacture must also be shown. The project number, project location and contractor will be indicated on the certification. An authorized representative of the manufacturing firm will sign the certification.

The cost of providing the Certificate of Compliance, the Certificate of Test and all expenses incurred regarding testing and sampling will not be paid for directly. This will be considered subsidiary to items for which the contract provides direct payment.

Minimum Materials Certificate, Sample and Inspection Requirements:

Q.C. Testing by Contractor – Contractor performs testing to control the quality of the material.

Verification Sampling and Testing by NDOR – Nebraska Department of Roads personnel perform verification testing to correlate with contractor's test results and/or to verify the quality of material for acceptance.

Independent Assurance Testing – Nebraska Department of Roads, Contractor, Consultant personnel, equipment and laboratories are evaluated on an annual basis. This evaluation will determine the testing personnel's competence performing their job. The evaluation will also assure that all equipment and testing facilities meet specification requirements.

The descriptions listed above are a very brief synopsis of the Quality Assurance Program for Construction.

The Quality Assurance Program for Construction manual is located in this sampling guide.

Please refer to it for a more in-depth description of the program.

Consultant Inspection Instructions

This Materials Sampling Guide defines all material sampling, testing, certifications, and other requirements that need to be included in the project documents by the inspecting agency, i.e. the Consultant.

In the Sections containing the column "Verification Sampling and Testing by NDOR" the consultant needs to perform the requirements identified under the column of "Field Personnel" and a Private Testing Lab, a NDOR Branch Lab, or the NDOR Lincoln Lab needs to perform the requirements identified under the columns "Branch Lab" and "Lincoln Lab". The consultant is responsible for the sampling of the materials and the delivery of the sample to the selected Lab for testing.

Where the contractor, in the column "Q. C. Sampling and Testing by Contractor", is required to submit samples to a lab for testing it is the responsibility of the inspecting consultant to identify the lab selected to do the testing.

In Sections 15-25, under the column "Sample Required", it states that the sample will be delivered to the Materials and Research Lab in Lincoln for testing. When a consultant is performing the inspection they will be responsible for the sampling and the delivery of the sample to a Private Testing Lab or the NDOR Lincoln Lab for testing.

Materials Sampling Guide

Table of Contents

Section 2

Asphaltic Materials

1. Asphaltic Oils……..Page 2-1
2. Asphalt, Emulsified Anionic and Cationic……Page 2-1
3. Performance Graded Binder……..……....Page 2-2

MATERIAL	TYPE OF TEST	Minimum Material Certificate, Sample and Inspection Requirements				
		Q.C. SAMPLING AND TESTING BY CONTRACTOR	VERIFICATION SAMPLING AND TESTING BY NDOR			LOCATION OF ADDITIONAL INFORMATION
SECTION: 2 – Asphaltic Materials			FIELD PERSONNEL	BRANCH LAB	LINCOLN LAB	
1)Asphaltic Oils	Quality	- - - - - - - - - -	When requested by the Lincoln Laboratory, a sample consisting of two one quart cans from a tank car or truckload following receipt at project. Sample to be submitted no later than five days to the Lincoln Laboratory.	- - - - - - - - - -	Acceptance samples to be tested in the Lincoln Laboratory	Section 27 Note1 Note2
2) Asphalt, Emulsified Anionic and Cationic	Quality	- - - - - - - - - -	Diluted Emulsions Unless diluted under the supervision of the engineer, a sample consisting of two one quart plastic containers from each tank car or truckload following receipt at project. Undiluted Emulsions When requested by the Lincoln Laboratory, a sample consisting of two one quart plastic containers from a tank car or truckload following receipt at project. Sample to be submitted no later than five days to the Lincoln Laboratory. No further samples are required unless the appearance of the material or any physical characteristics of it indicates contamination or noncompliance with the specifications.	- - - - - - - - - -	Acceptance samples to be tested in the Lincoln Laboratory.	Section 27 Note 1 Note 2

MATERIAL	TYPE OF TEST	Minimum Material Certificate, Sample and Inspection Requirements				
		Q.C. SAMPLING AND TESTING BY CONTRACTOR	VERIFICATION SAMPLING AND TESTING BY NDOR			LOCATION OF ADDITIONAL INFORMATION
SECTION: 2 – Asphaltic Materials (continued)			FIELD PERSONNEL	BRANCH LAB	LINCOLN LAB	
3)Perfor-mance Graded Binder	Quality	- - - - - - - - - -	Using two one quart cans submit a two quart sample for each lot (3750 tons) or parts thereof of asphaltic concrete produced. A minimum of two two-quart samples per project. Sample to be submitted no later than 10 days to the Lincoln Laboratory. **(This sampling frequency must be followed for each grade and source of PG Binder used on the project).** The sample information must be entered in SiteManager. The following information must be included on the SiteManager sample tag: sample id number, project number, contract number, project manager, binder grade, date sampled, refinery, and lot number. Sample to be submitted to the Lincoln Laboratory.	- - - - - - - - - -	Acceptance samples to be tested in the Lincoln Laboratory.	Section 27 Note 2

Materials Sampling Guide

Table of Contents

Section 3

Asphaltic Concrete

1. Asphaltic Concrete Type SP1-SP5, SPR…… Page 3-1
2. Asphaltic Concrete Type SPS…… Page 3-1
3. Asphaltic Concrete Type HRB…… Page 3-1
4. Asphaltic Concrete Type SPL…… Page 3-1
5. Asphaltic Concrete Type OGFCCRM, OGFC, GGCRM, GGCRM LV, LC, RLC……..……... Page 3-2
6. Asphaltic Concrete Mixtures…….. Page 3-2
7. Asphaltic Concrete Pavement…… Page 3-2
8. Hydrated Lime or Type S Lime...…….. Page 3-3

MATERIAL	TYPE OF TEST	Minimum Material Certificate, Sample and Inspection Requirements				
		Q.C. SAMPLING AND TESTING BY CONTRACTOR	VERIFICATION SAMPLING AND TESTING BY NDOR			LOCATION OF ADDITIONAL INFORMATION
Section 3 – Asphaltic Concrete			FIELD PERSONNEL	BRANCH LAB	LINCOLN LAB	
1) Asphaltic Concrete Type SP1-SP5 SPR	Air Void VMA Binder % FAA CAA Gradation	See Specifications, Supplemental Specifications and/or Project Special Provisions. (Normally one per 750 ton sub-lot)	Insure a sample for each 750 ton sub-lot is retained by the contractor for possible Branch Lab testing.	One sample representing a 750 ton sub-lot will be tested for each 3750 ton lot.	Testing and sampling only for dispute resolution.	Section 27 Note 3
	Tensile Strength Ratio (TSR) T-283	- - - - - - - - - -	A sample consisting of six specimens is required from the first lot of field production. Additional samples if requested by the Materials and Research Division.	- - - - - - - - - -	Testing for Lot Field Production. A Sample consisting of six specimens is required from the first lot of field production.	Section 27 Note 3
2) Asphaltic Concrete Type SPS	Air Void Gradation Binder %	See Specifications, Supplemental Specifications and/or Project Special Provisions. (Normally one per 750 ton sub-lot)	Insure a sample for each 750 ton sub-lot is retained by the contractor for possible Branch Lab testing.	One sample representing a 750 ton sub-lot will be tested for each 3750 ton lot.	Testing and sampling only for dispute resolution.	Section 27 Note 3
3) Asphaltic Concrete Type HRB	Binder % FAA (Virgin Material Only)	See Specifications, Supplemental Specifications and/or Project Special Provisions. (Normally one per 750 ton sub-lot)	Insure a sample for each 750 ton sub-lot is retained by the contractor for possible Branch Lab testing	One sample representing a 750 ton sub-lot will be tested for each 3750 ton lot.	Testing and sampling only for dispute resolution.	Section 27 Note 3
4) Asphaltic Concrete Type SPL	Air Void Gradation Brg. Cap. FAA CAA Binder %	See Specifications, Supplemental Specifications and/or Project Special Provisions. (Normally one per 750 ton sub-lot)	Insure a sample for each 750 ton sub-lot is retained by the contractor for possible Branch Lab testing.	One sample representing a 750 ton sub-lot will be tested for each 3750 ton lot. All Bearing Capacity Samples will be shipped to the Lincoln Lab for testing.	Testing and sampling only for dispute resolution. All Bearing Capacity Samples will be tested at the Lincoln Lab.	Section 27 Note 3

MATERIAL	TYPE OF TEST	Minimum Material Certificate, Sample and Inspection Requirements				
		Q.C. SAMPLING AND TESTING BY CONTRACTOR	VERIFICATION SAMPLING AND TESTING BY NDOR			LOCATION OF ADDITIONAL INFORMATION
Section 3 – Asphaltic Concrete			FIELD PERSONNEL	BRANCH LAB	LINCOLN LAB	
5)Asphaltic Concrete Types OGFCCRM OGFC GGCRM GGCRM LV LC RLC	Quality	See Specifications, Supplemental Specifications and/or Project Special Provisions. (Normally one per 750 ton sub-lot)	Insure a sample for each 750 ton sub-lot is retained by the contractor for possible Branch Lab testing.	One sample representing a 750 ton sub-lot will be tested for each 3750 ton lot.	Testing and sampling only for dispute resolution.	Section 27 Note 3
6) Asphaltic Concrete Mixtures	Density	See Specifications, Supplemental Specifications and/or Project Special Provisions. (Normally one per 750 ton sub-lot)	See Specifications, Supplemental Specifications and/or Project Special Provisions.	Testing and sampling for correlation testing and dispute resolution as needed.	Testing and sampling for correlation testing and dispute resolution as needed.	----------
7) Asphaltic Concrete Pavement	Surface Smoothness	Contractor performs all QC pavement smoothness testing specified in the NDOR Standard Specifications for Highway Construction and/or Project Special Provisions.	Approximately 10 percent of contractor's results shall be randomly verified. Project personnel will submit requests for pavement smoothness verification testing to the following individuals: District 1,2,4,5,6,7,8 Ron Bohling, Lincoln. District 3 Rob Davis, Norfolk. Submit requests at least 7 days in advance to allow for scheduling.	----------	----------	----------

MATERIAL	TYPE OF TEST	Minimum Material Certificate, Sample and Inspection Requirements				
		Q.C. SAMPLING AND TESTING BY CONTRACTOR	VERIFICATION SAMPLING AND TESTING BY NDOR			LOCATION OF ADDITIONAL INFORMATION
Section 3 – Asphaltic Concrete			FIELD PERSONNEL	BRANCH LAB	LINCOLN LAB	
8) Hydrated Lime or Type S Lime	Quality	- - - - - - - - - -	Project personnel will supply one one-pound sample for each 1000 tons (minimum of three samples per project) of material used to perform the testing shown under the Lincoln Lab column. (Place the lime in a plastic bag before putting in the cloth sample bags).	----------	One one-pound sample for each 1000 tons (minimum of three samples per project) of material used for quality tests.	----------

Materials Sampling Guide

Table of Contents

Section 4

Asphaltic Concrete Materials

1. Mineral Aggregate (Gravel, Sand, Sand-Gravel)…… Page 4-1
2. Crushed Rock (Limestone)…….…… Page 4-1
3. Crushed Rock (Limestone Screenings, Man-Sand)…… Page 4-1
4. Quartzite and Granite……Page 4-1
5. Quartzite, Chat and Granite (Screenings, Man-Sand)…… Page 4-1
6. Crushed Mineral Aggregate or Chat for Microsurfacing……..Page 4-2
7. Mineral Filler……...Page 4-2

MATERIAL	TYPE OF TEST	Minimum Material Certificate, Sample and Inspection Requirements				
		Q.C. SAMPLING AND TESTING BY CONTRACTOR	VERIFICATION SAMPLING AND TESTING BY NDOR			LOCATION OF ADDITIONAL INFORMATION
Section: 4 – Asphaltic Concrete Materials			FIELD PERSONNEL	BRANCH LAB	LINCOLN LAB	
1) Mineral Aggregate (Gravel, Sand, Sand-Gravel)	Quality	- - - - - - - - - -	Project personnel will supply the 60 pound sample needed to perform the testing shown under the Lincoln Lab column. The sample shall be taken at the project stockpile.	- - - - - - - - - -	One 60 pound sample for quality tests for source approval, if so designated on the DR Form 324 "Source of Aggregates To Be Used" when changes in quality or characteristics occur. No other samples for quality or correlation are needed.	Section 27 Note 4
2) Crushed Rock (Limestone)	Quality	- - - - - - - - - -	Project personnel will supply the 60 pound sample needed to perform the testing shown under the Lincoln Lab column. The sample shall be taken at the project stockpile.	- - - - - - - - - -	One 60 pound sample for quality tests for 3000 tons of aggregate used or fraction thereof.	
3) Crushed Rock (Limestone Screenings, Man-Sand)	Quality	- - - - - - - - - -	Project personnel will supply the 10 pound sample needed to perform the testing shown under the Lincoln Lab column. The sample shall be taken at the project stockpile.	- - - - - - - - - -	One 10 pound sample for quality tests for each 5000 tons of aggregate used or fraction thereof.	
4) Quartzite & Granite	Quality	- - - - - - - - - -	Project personnel will supply the 60 pound sample needed to perform the testing shown under the Lincoln Lab column. The sample shall be taken at the project stockpile.	- - - - - - - - - -	One 60 pound sample for quality tests each 5000 tons of aggregate used or fraction thereof.	- - -
5) Quartzite, Chat & Granite (Screenings, Man-Sand)	Quality	- - - - - - - - - -	Project personnel will supply the 10 pound sample needed to perform the testing shown under the Lincoln Lab column. The sample shall be taken at the project stockpile.	- - - - - - - - - -	One 10 pound sample for quality tests for each 5000 tons of aggregate used or fraction thereof.	- - -

MATERIAL	TYPE OF TEST	Minimum Material Certificate, Sample and Inspection Requirements				
		Q.C. SAMPLING AND TESTING BY CONTRACTOR	VERIFICATION SAMPLING AND TESTING BY NDOR			LOCATION OF ADDITIONAL INFORMATION
Section: 4 – Asphaltic Concrete Materials (continued)			FIELD PERSONNEL	BRANCH LAB	LINCOLN LAB	
6) Crushed Mineral Aggregate or Chat for Micro-surfacing	Quality & Gradation, FAA, L.A. & Sand Equivalent	- - - - - - - - - -	One sample for gradations every 650 tons of material used or fraction thereof. The sample shall be taken at the project.	- - - - - - - - - -	One 60 pound sample for first 1000 tons of aggregate used. Subsequent samples will be one 10 pound sample for each 1000 tons used, or fraction thereof. (Duplicate of sample tested in the field).	Section 27 Note 4
7) Mineral Filler	Plasticity Index & Gradation	- - - - - - - - - -	Project personnel will supply the 10 pound sample needed to perform the testing shown under the Lincoln Lab column. The sample shall be taken at the project.	- - - - - - - - - -	One 10 pound sample per project at production for gradation and plasticity index, unless changes in quality or characteristics occur.	- - -

Materials Sampling Guide

Table of Contents

Section 5

Cold Mix Bituminous Surfacing and Base

1. Subgrade Sand…….. Page 5-1
2. Mineral Filler……... Page 5-1
3. Combined Materials (Sand and Filler)…… Page 5-1
4. Bituminous Aggregates (Includes Mixed In Place Bituminous Surfacing)…… Page 5-2
5. Mineral Aggregates (Experimental Bituminous Mixture)…… Page 5-2
6. Mineral Filler (Experimental Bituminous Mixture)…… Page 5-2

MATERIAL	TYPE OF TEST	Minimum Material Certificate, Sample and Inspection Requirements				
		Q.C. SAMPLING AND TESTING BY CONTRACTOR	VERIFICATION SAMPLING AND TESTING BY NDOR			LOCATION OF ADDITIONAL INFORMATION
Section: 5 – Cold Mix Bituminous Surfacing and Base			FIELD PERSONNEL	BRANCH LAB	LINCOLN LAB	
1) Subgrade Sand	Gradation	- - - - - - - - - -	One sample for gradation test each 10th station. Project personnel will supply the 10 pound sample needed to perform the testing shown under the Lincoln Lab column. The samples shall be taken at the project.	- - - - - - - - -	One 10 pound sample for gradation test each mile. (Duplicate of sample tested in the field).	- - -
2) Mineral Filler	Plasticity Index & Gradation	- - - - - - - - - -	One sample for gradation test each 100 cubic yards or fraction thereof. The sample shall be taken at the project. Project personnel will supply the 10 pound sample needed to perform the testing shown under the Lincoln Lab column. The samples shall be taken at the project.	- - - - - - - - - -	One 10 pound pre-construction sample per project for gradation and plasticity index.	- - -
3) Combined Materials (Sand & Filler)	Gradation & Moisture	- - - - - - - - - -	One sample for gradation and moisture each 10th station or in cases of short sections Project Manager to determine sampling for compliance. Project personnel will supply the 10 pound sample needed to perform the testing shown under the Lincoln Lab column. The sample shall be taken at the project.	- - - - - - - - - -	One 10 pound sample for gradation test each mile (Duplicate of sample tested in the field).	- - -

MATERIAL	TYPE OF TEST	Minimum Material Certificate, Sample and Inspection Requirements				
		Q.C. SAMPLING AND TESTING BY CONTRACTOR	VERIFICATION SAMPLING AND TESTING BY NDOR			LOCATION OF ADDITIONAL INFORMATION
SECTION: 5 – Cold Mix Bituminous Surfacing and Base (continued)			FIELD PERSONNEL	BRANCH LAB	LINCOLN LAB	.
4) Bituminous Aggregates (Includes Mixed in Place Bituminous Surfacing)	Quality	- - - - - - - - - -	One test for moisture and aeration as soon as each design section is well mixed. Then test as necessary to control moisture and aeration. The sample shall be taken at the project. Project personnel will supply the 1 gallon sample needed to perform the testing shown under the Branch Lab column.	One 1-gallon sample for progressive and other tests as soon as each design section is well mixed. Followed by one 1-gallon sample for correlation tests each 2000 feet of windrow, or at the discretion of the Project Manager, as laid. (Submitted sample will be a duplicate of the sample tested in the field)	- - - - - - - - - -	Section 27 Note 1
5) Mineral Aggregates	Experimental Bituminous Mixture	- - - - - - - - - -	Project personnel will supply the 60 pound sample needed to perform the testing shown under the Lincoln Lab column.	- - - - - - - - - -	- - - - - - - - - -	Section 27 Note 4
6) Mineral Filler	Experimental Bituminous Mixture	- - - - - - - - - -	Project personnel will supply the 40 pound sample needed to perform the testing shown under the Lincoln Lab column.	- - - - - - - -	- - - - - - - - - -	- - -

Materials Sampling Guide

Table of Contents

Section 6

Gravel and Crushed Rock for Surfacing

1. Gravel for Surfacing…….. Page 6-1
2. Crushed Rock for Surfacing……Page 6-1

MATERIAL	TYPE OF TEST	Minimum Material Certificate, Sample and Inspection Requirements				
		Q.C. SAMPLING AND TESTING BY CONTRACTOR	VERIFICATION SAMPLING AND TESTING BY NDOR			LOCATION OF ADDITIONAL INFORMATION
Section: 6 – Gravel and Crushed Rock for Surfacing			FIELD PERSONNEL	BRANCH LAB	LINCOLN LAB	
1) Gravel For Surfacing	Quality & Gradation	- - - - - - - - - -	See Standard Specifications, Supplemental Specifications and/or the Project Provisions for sampling and testing requirements. Project personnel will provide the 10 and 60 pound samples needed to perform the testing shown under the Lincoln Lab column. The sample shall be taken at the project.	- - - - - - - - - -	One 60 pound sample for quality tests first 1000 cubic yard if so designated DR FORM 324 "Source Of Aggregates To Be Used." One 10 pound sample for gradation test each 1,000 cubic yard or fraction thereof (Duplicate of sample tested in the field) NOTE: A Central Lab sample is required on all projects. If the DR Form 324 – "Source of Aggregates To Be Used" form designates that a 60 pound sample is not needed field personnel must still submit a 10 pound sample.	Section 27 Note 1 Note 4
2) Crushed Rock for Surfacing	Quality & Gradation	- - - - - - - - - -	One sample for each 750 cubic yards or fraction thereof, either at the source or on the project. (Certified quarry personnel may obtain and test this sample). Project personnel will provide the 60 pound sample needed to perform the testing shown under the Lincoln Lab column. The sample shall be taken at the project.	- - - - - - - - - -	No samples required if source is Kerford or Martin Marietta @ Weeping Water or Fort Calhoun @ Fort Calhoun. One 60 pound sample is required for each 3,000 cubic yards or fraction thereof, from all other sources.	Section 27 Note 1 Note 5

Materials Sampling Guide

Table of Contents

Section 7

Mineral Aggregate for Armor Coat

1. Mineral Aggregate for Armor Coat……..Page 7-1
2. Chip Seal (Limestone, Dolomite, Granite, Quartzite)…….. Page 7-1

MATERIAL	TYPE OF TEST	Minimum Material Certificate, Sample and Inspection Requirements				
		Q.C. SAMPLING AND TESTING BY CONTRACTOR	VERIFICATION SAMPLING AND TESTING BY NDOR			LOCATION OF ADDITIONAL INFORMATION
SECTION: 7 – Mineral Aggregate for Armor Coat			FIELD PERSONNEL	BRANCH LAB	LINCOLN LAB	
1) Mineral Aggregate for Armor Coat	Quality & Gradation	- - - - - - - - - -	One sample for gradation test each 200 cubic yard or fraction thereof. Project personnel will provide the 10 and 60 pound samples needed to perform the testing shown under the Lincoln Lab column. The samples shall be taken at the project.	- - - - - - - - -	One 60 pound sample for quality tests first 1,000 cubic yards. If so designated on the DR FORM 324 “Source of Aggregates to Be Used”. One 10 pound sample for gradation tests each 1000 cubic yard or fraction thereof. (Duplicate of sample tested in the field). NOTE: A Central Lab sample is required on all projects. If the DR Form 324 – “Source of Aggregates To Be Used” form designates that a 60 pound sample is not needed field personnel must still submit a 10 pound sample.	Section 27 Note 4
2) Chip Seal (Limestone, Dolomite, Granite, Quartzite)	Quality & Gradation	- - - - - - - - - -	One sample for gradation test each 200 cubic yard or fraction thereof. Project personnel will provide the 10 and 60 pound samples needed to perform the testing shown under the Lincoln Lab column. The samples shall be taken at the project	- - - - - - - - -	One 60 pound sample for quality tests first 1,000 cubic yards. If so designated on the DR FORM 324 “Source of Aggregates to Be Used”. One 10 pound sample for gradation tests each 1000 cubic yard or fraction thereof. (Duplicate of sample tested in the field).	Section 27 Note 4

Materials Sampling Guide

Table of Contents

Section 8

Crushed Rock and Crushed Rock Screenings for Base Course

1. Crushed Rock for Base Course……..Page 8-1
2. Crushed Rock Screenings for Base Course……Page 8-1

MATERIAL	TYPE OF TEST	Minimum Material Certificate, Sample and Inspection Requirements				
		Q.C. SAMPLING AND TESTING BY CONTRACTOR	VERIFICATION SAMPLING AND TESTING BY NDOR			LOCATION OF ADDITIONAL INFORMATION
Section: 8 – Crushed Rock and Crushed Rock Screenings for Base Course			FIELD PERSONNEL	BRANCH LAB	LINCOLN LAB	
1) Crushed Rock for Base Course 2) Crushed Rock Screenings for Base Course	Quality, Gradation & Compaction	- - - - - - - - - -	One sample for gradation testing, each 1000 cubic yards or fraction thereof. (The approximate sample size for field performed gradation testing should consist of a 25 pound sample for crushed rock for base course and a 10 pound sample for crushed rock screenings for base course) Additional samples should be taken at the discretion of the Project Manager to confirm that segregation, degradation or contamination of the material has not occurred prior to incorporation in to the work. Project personnel will supply the 60 pound sample needed to perform the testing shown under the Lincoln Lab column. The samples shall be taken at the project.	- - - - - - - - - -	One 60 pound sample for quality and gradation tests each 3000 cubic yards or fraction thereof. This will be a duplicate of sample tested in the field. One 60 pound sample for moisture density curve if required. This sample shall be submitted prior to placement.	

Materials Sampling Guide

Table of Contents

Section 9

Grading

1. Embankment (Cohesive & Granular) ..... Page 9-1

MATERIAL	TYPE OF TEST	Minimum Material Certificate, Sample and Inspection Requirements				
		Q.C. SAMPLING AND TESTING BY CONTRACTOR	VERIFICATION SAMPLING AND TESTING BY NDOR			LOCATION OF ADDITIONAL INFORMATION
Section: 9 – Grading			FIELD PERSONNEL	BRANCH LAB	LINCOLN LAB	
1)Embank-ment (Cohesive & Granular)	Moisture - Density	- - - - - - - - - -	In-place moisture-density tests for each 1000 - 3000 cubic yards, depending on the soil type or as need is indicated by changes in soil material. In cases of structure backfill, short deep embankments or other special situations, the sampling frequency should be increased as determined by the Project Manager to adequately represent the soil material. If tested layer is disturbed by construction operations, rain, etc. , check tests shall be taken to assure compliance with specifications prior to subsequent construction. Project personnel to supply the sample needed to perform the testing shown under the Branch/Lincoln Lab column.	Compaction curve data usually will be furnished by the Materials and Research Division. In those cases where these are not available, large samples (approximately 60 pounds) for compaction curves shall be submitted to the Lincoln Laboratory or Branch Laboratory by project personnel.	Compaction curve data usually will be furnished by the Materials and Research Division. In those cases where these are not available, large samples (approximately 60 pounds) for compaction curves shall be submitted to the Lincoln Laboratory or Branch Laboratory by project personnel.	- - -
	Gradation (if specified)	- - - - - - - - - -	One sample each 1000 – 3000 cubic yards depending on the soil type, or as need is indicated by changes in soil material. In cases of short sections or structure backfill, each section should be represented by tests to adequately represent the material in the fill. Project personnel to supply the sample needed to perform the testing shown under the Branch/Lincoln Lab column.	One 10 pound sample for correlation test each mile, or in cases of short sections, or structure backfill, the number of samples is to be increased to adequately correlate the samples taken in the field. (Duplicate of sampled tested in the field) This sample can be submitted to the Lincoln Laboratory or Branch Laboratory by project personnel.	One 10 pound sample for correlation each mile, or in cases of short sections, or structure backfill, the number of samples is to be increased to adequately correlate the samples taken in the field. (Duplicate of sample taken in the field) The sample can be submitted to the Lincoln Laboratory or Branch Laboratory by project personnel.	- - -
Laboratory samples must be submitted in a canvas bag or a clean five gallon bucket.						

Materials Sampling Guide

Table of Contents

Section 10

Compaction – Subgrade (Cohesive Soils)

1. Subgrade Compaction & Subgrade Reconstruction……..... Page 10-1
2. Fly Ash…… Page 10-2
3. Hydrated Lime or Pebble Quicklime…….. Page 10-2
4. Subgrade Soil & Hydrated Lime or Pebble Quicklime for Mix Design……..Page 10-2

MATERIAL	TYPE OF TEST	Minimum Material Certificate, Sample and Inspection Requirements				
		Q.C. SAMPLING AND TESTING BY CONTRACTOR	VERIFICATION SAMPLING AND TESTING BY NDOR			LOCATION OF ADDITIONAL INFORMATION
Section: 10 – Compaction – Subgrade (Cohesive Soils)			FIELD PERSONNEL	BRANCH LAB	LINCOLN LAB	
1) Subgrade Compaction & Subgrade Re-construction	Moisture - Density	- - - - - - - - - -	In-place moisture density tests each 1000 feet or less, or in cases of short sections, moisture-density tests to confirm the Project Manager's judgement on compliance with specification requirements. Also each soil change should be represented. Moisture-density tests each 1000 feet or less, per side of the subgrade for concrete base course widening. If tested layer is disturbed by construction operations, rain etc., check tests shall be taken to assure compliance with specifications prior to subsequent construction. Moisture-density tests should also be taken at bridge ends, railroad crossings, project ends, county road intersections, driveways, patches etc., to confirm Project Manager's judgement on compliance with specifications. Project personnel to supply the sample needed to perform the testing shown under the Branch/Lincoln Lab column.	Compaction curve data usually will be furnished by the Materials and Research Division. In those cases where these are not available, large samples (approximately 60 pounds) for compaction curves shall be submitted to the Lincoln Laboratory or the Branch Laboratory by project personnel.	Compaction curve data usually will be furnished by the Materials and Research Division. In those cases where these are not available, large samples (approximately 60 pounds) for compaction curves shall be submitted to the Lincoln laboratory or Branch Laboratory by project personnel.	- - -
Laboratory samples must be submitted in a canvas bag or clean five gallon bucket with lid.						

MATERIAL	TYPE OF TEST	Minimum Material Certificate, Sample and Inspection Requirements				
		Q.C. TESTING BY CONTRACTOR	VERIFICATION SAMPLING AND TESTING BY NDOR			LOCATION OF ADDITIONAL INFORMATION
Section: 10 – Compaction – Subgrade (Cohesive Soils)			FIELD PERSONNEL	BRANCH LAB	LINCOLN LAB	
2) Fly Ash	Quality	----------	Refer to Section 1 of the Approved Products List. Fly Ash is sampled at the fly ash mill and is accepted for use with a manufacturer's certification. A one-gallon sample is required when requested by the Materials and Research Division, the inspector questions the material or the material has been in storage for 90 days or more. Sample to be submitted to the Lincoln Laboratory.	-------	One-gallon sample when submitted from fly ash plant or field.	- - -
3) Hydrated Lime or Pebble Quicklime	Quality	----------	Project personnel will supply one one-pound sample for each 1000 tons (minimum of three samples per project) of material used to perform the testing shown under the Lincoln Lab column. (Place the lime in a plastic bag before putting in the cloth sample bags).	---------	One one-pound sample for each 1000 tons (minimum of three samples per project) of material used for quality tests.	- - -
4) Subgrade Soil & Hydrated Lime or Pebble Quicklime for Mix Design	Quality	---------	Project personnel will supply a 60-pound sample of subgrade soil and a five-pound sample of lime to perform the testing shown under the Lincoln Lab column. (Place the lime in a plastic bag before putting in the cloth sample bags).	--------	One 60-pound sample of subgrade soil and one five-pound sample of lime to perform the testing for mix design.	- - -

Materials Sampling Guide

Table of Contents

Section 11

Compaction – Stabilized Portion of Granular Subgrade

1. Stabilized Portion of Granular Subgrade……... Page 11-1
2. Soil Binder……..Page 11-2

MATERIAL	TYPE OF TEST	Minimum Material Certificate, Sample and Inspection Requirements				
		Q.C. SAMPLING AND TESTING BY CONTRACTOR	VERIFICATION SAMPLING AND TESTING BY NDOR			LOCATION OF ADDITIONAL INFORMATION
Section: 11 – Compaction Stabilized Portion of Granular Subgrade			FIELD PERSONNEL	BRANCH LAB	LINCOLN LAB	
1) Stabilized Portion of Granular Subgrade	Moisture – Density	- - - - - - - - - -	In-place moisture-density tests for each 1000 feet or less, or in cases of short sections, moisture-density tests to confirm the Project Manager's judgement of compliance with specification requirements. If tested layer is disturbed by construction operations, rain, etc. check tests shall be taken to assure compliance with specifications prior to subsequent construction. Project personnel will supply the samples needed to perform the testing shown under the Lincoln Lab/Branch lab columns. Samples to be taken in the field.	One 60 pound sample of the granular material and one 20 pound sample of the soil binder, or one 60 pound sample of the combined mixture shall be submitted to the Lincoln or Branch Laboratory for compaction curve data.	One 60 pound sample of the granular material and one 20 pound sample of the soil binder,) or one 60 pound sample of the combined mixture shall be submitted to the Lincoln or Branch Laboratory for compaction curve data.	- - -
	Gradation & Quality (If Specified)	- - - - - - - - - -	One sample each fifth station for gradation, or in cases of short sections, each should be represented by tests to adequately represent the material in the fill. Project personnel will supply the 10 pound sample needed to perform the testing shown under the Lincoln Lab/Branch Lab columns. Samples to be taken in the field.	One 10 pound sample for gradation tests each mile or fraction thereof. (Duplicate of sample tested in the field). This sample to be submitted to the Branch Laboratory or the Lincoln Laboratory.	One 10 pound sample for gradation tests each mile or fraction thereof. (Duplicate of sample tested in the field). This sample to be submitted to the Lincoln or Branch Laboratory.	- - -
Laboratory Samples must be submitted in a canvas bag or a clean five gallon bucket with lid.						

MATERIAL	TYPE OF TEST	Minimum Material Certificate, Sample and Inspection Requirements				
		Q.C. SAMPLING AND TESTING BY CONTRACTOR	VERIFICATION SAMPLING AND TESTING BY NDOR			LOCATION OF ADDITIONAL INFORMATION
Section: 11 – Compaction Stabilized Portion of Granular Subgrade (continued)			FIELD PERSONNEL	BRANCH LAB	LINCOLN LAB	
2) Soil Binder	Gradation & Plasticity Index	- - - - - - - - - -	One sample for gradation tests each 50 cubic yards or fraction thereof. If less than 10 percent retained on the No. 200 sieve, one sample for each 200 cubic yards of fraction thereof. Project personnel will supply the 10 pound sample needed to perform the testing shown under the Branch Lab/Lincoln Lab column. Sample to be taken at the project.	One 10 pound sample for gradation tests(lab to run PI) each 1000 cubic yards or fraction thereof. (Duplicate of sample tested in the field). This sample to be submitted to the Branch Laboratory or the Lincoln Laboratory	One 10 pound sample for gradation tests(lab to run PI) each 1000 cubic yards, or fraction thereof. (Duplicate of sample tested in the field) This sample to be submitted to the Branch laboratory or the Lincoln Laboratory	- - -
Laboratory Samples must be submitted in a canvas bag or a clean five gallon bucket with lid.						

Materials Sampling Guide

Table of Contents

Section 12

Foundation Course (Crushed Concrete, Aggregate-D, and Bituminous)

1. Crushed Concrete Foundation Course…….. Page 12-1
2. All Aggregates and Soil Binder…… Page 12-1
3. Bituminous…… Page 12-1
4. Aggregate Foundation Course-D ..... Page 12-2
5. Soil Binder ..... Page 12-2
6. Foundation Course ..... Page 12-2

MATERIAL	TYPE OF TEST	Minimum Material Certificate, Sample and Inspection Requirements				
		Q.C. SAMPLING AND TESTING BY CONTRACTOR	VERIFICATION SAMPLING AND TESTING BY NDOR			LOCATION OF ADDITIONAL INFORMATION
Section: 12 – Foundation Course (Crushed Concrete, Aggregate-D, and Bituminous)			FIELD PERSONNEL	BRANCH LAB	LINCOLN LAB	
1) Crushed Concrete Foundation Course	Gradation	- - - - - - - - - -	One sample for testing each 500 cubic yard or fraction thereof. The sample shall be taken at the project. (The recommended sample size is 50 pounds) Project personnel will supply the 60 pound sample needed to perform the testing shown under the Lincoln Lab column. The sample shall be taken at the project.	- - - - - - - - - -	One 60 pound sample for gradation each 2500 cubic yards or fraction thereof. (Duplicate of sample tested in the field)	- - -
2) All Aggregates & Soil Binder	Experimental Base Course Mixtures	- - - - - - - - - -	Project personnel will submit the 60 pound samples of aggregates and the 20 pound sample of soil binder needed to perform the testing shown under the Lincoln Lab column. The sample shall be taken at the project.	- - - - - - - - - -	One 60 pound sample of each aggregate and one 20 pound sample of soil binder for EBCM mix design and moisture-density information. This sample is to be submitted prior to production.	- - -
3) Bituminous Foundation Course	Gradation	- - - - - - - - - -	One sample for testing each 500 cubic yard or fraction thereof. The sample shall be taken at the project. (The recommended sample size is 35 pounds)	- - - - - - - - - -	- - - - - - - - - -	- - -
Laboratory samples must be submitted in a canvas bag or a clean five gallon bucket with lid.						

MATERIAL	TYPE OF TEST	Minimum Material Certificate, Sample and Inspection Requirements					
		Q.C. SAMPLING AND TESTING BY CONTRACTOR	VERIFICATION SAMPLING AND TESTING BY NDOR			LOCATION OF ADDITIONAL INFORMATION	
Section: 12 – Foundation Course (Crushed Concrete, Aggregate-D, and Bituminous)			FIELD PERSONNEL	BRANCH LAB	LINCOLN LAB	NOTE No.	PAGE No.
4) Aggregate Foundation Course – D	Gradation, FAA & Compaction	----------	One sample for testing each 500 cubic yard or fraction thereof. The sample shall be taken at the project. (The recommended sample size is 25 pounds) Project personnel will supply the 25 pound sample needed to perform the testing shown under the Lincoln Lab column. The sample shall be taken at the project.	----------	First sample will be one 60 pound sample for gradation, FAA, Quality and moisture density tests. (Sample must be submitted prior to placement) Remaining samples will each be one 20 pound sample for gradation and FAA tests each 2500 cubic yard or fraction thereof. (Duplicate sample tested in the field).	---	
5) Soil Binder	Plasticity Index & Gradation	----------	Project Personnel will supply the 10 pound sample needed to perform the testing shown under the Lincoln Lab column. The sample shall be taken at the mixing locations.	----------	One 10 pound sample for testing each 1000 cubic yards of binder used or fraction thereof.	---	
6)Foundation Course	Moisture-Density	----------	In-place density tests each 1000 feet or less, or in case of short sections, moisture-density tests to confirm compliance with the specifications. In-place density tests each 1000 feet or less, per side for concrete base course widening. If tested layer is disturbed by construction operations, rain, etc. Check tests shall be taken to assure compliance with the specifications.	----------	Compaction curve data will be included with the EBCM mix design information.	---	
Laboratory samples must be submitted in a canvas bag or a clean five gallon bucket with lid.							

Materials Sampling Guide

Table of Contents

Section 13

Granular Base, Granular Fill, Granular Backfill, Sand Blanket & MSE Walls

1. All Mineral Aggregates & Soil Binder (Experimental Base Course Mixtures) ..... Page 13-1
2. Mineral Aggregates (Commercial Production) ..... Page 13-1
3. Coarse Sand ..... Page 13-2
4. Fine Sand ..... Page 13-2
5. Soil Binder ..... Page 13-3
6. Granular Base, Granular Fill, Granular Backfill and Sand Blanket ..... Page 13-4
7. Stabilized Portion of Granular Base, Granular Fill, Granular Backfill and Sand Blanket ..... Page 13-5
8. Granular Backfill for Structures ..... Page 13-6
9. Granular Subdrains ..... Page 13-7
10. Granular Backfill for Pipe Underdrain ..... Page 13-7
11. Select and Random Granular Backfill for MSE Walls ..... Page 13-8

MATERIAL	TYPE OF TEST	Minimum Material Certificate, Sample and Inspection Requirements				
		Q.C. SAMPLING AND TESTING BY CONTRACTOR	VERIFICATION SAMPLING AND TESTING BY NDOR			LOCATION OF ADDITIONAL INFORMATION
Section: 13 – Granular Base, Granular Fill, Granular Backfill, Sand Blanket and MSE Walls			FIELD PERSONNEL	BRANCH LAB	LINCOLN LAB	
1) All – Mineral Aggregates & Soil Binder	Experimental Base Course Mixtures (When mix design required)	Contractor to submit the 60 pound sample of sand and the 20 pound sample of soil binder needed to perform the testing shown under the Lincoln lab column. The contractor needs to submit the anticipated percentages of granular material and soil binder that will be used for stabilization.	- - - - - - - - - -	- - - - - - - - - -	Approximately 60 pounds of each aggregate and approximately 20 pounds of soil binder for EBCM mix design. To be submitted prior to mixture production.	- - -
2) Mineral Aggregates (Commercial Production)	Quality & Gradation (if specified)	- - - - - - - - - -	One pound sample for gradation each 300 cubic yards either at the source or on the project. (The recommended sample size is 25 pounds) A minimum of one check sample for each 1000 cubic yards or fraction thereof shall be taken at the point material is incorporated in the work or at the point the materials is to be mixed with other materials. The gradation sample required may also serve as this acceptance and job control sample if it is taken at the point indicated above. Additional samples should be taken at the discretion of the Project Manager to confirm his judgment that segregation, degradation or contamination of the material has not occurred prior to incorporation into the work. Project personnel will submit the 10 and 60 pound samples needed to perform the testing shown under the Lincoln Lab column.	- - - - - - - - - -	One 60 pound sample for quality tests first 1000 cubic yards if so designated on DR FORM 324 “Source of Aggregates to be Used”, or when changes in quality or characteristics occur. One 10 pound sample for gradation tests each 1000 cubic yard or fraction thereof. (Duplicate of sample tested in the field)	Section 27 Note 1 Note 4
Laboratory samples must be submitted in a canvas bag or clean five gallon bucket with lid.						

MATERIAL	TYPE OF TEST	Minimum Material Certificate, Sample and Inspection Requirements				
		Q.C. SAMPLING AND TESTING BY CONTRACTOR	VERIFICATION SAMPLING AND TESTING BY NDOR			LOCATION OF ADDITIONAL INFORMATION
Section: 13 – Granular Base, Granular Fill, Granular Backfill, Sand Blanket and MSE Walls (continued)			FIELD PERSONNEL	BRANCH LAB	LINCOLN LAB	
3) Coarse Sand	Quality & Gradation (if specified)	- - - - - - - - - -	One sample for gradation tests each 300 cubic yards or fraction thereof. (The recommended sample size is 25 pounds) Project personnel will submit the 10 and 60 pound samples needed to perform the testing shown under the Lincoln Lab column. Sample shall be taken at the project.	- - - - - - - - -	One 60 pound sample for quality tests first 1000 cubic yards if so designated on DR FORM 324"Source of Aggregates to be Used", or when changes in quality or characteristics occur. One 10 pound sample for gradation tests each 1000 cubic yard or fraction thereof. (Duplicate of sample tested in the field)	Section 27 Note 1 Note 4
4) Fine Sand	Gradation (if specified)	- - - - - - - - - - -	One sample for gradation tests each 300 cubic yards or fraction thereof. (The recommended sample size is 25 pounds) Project personnel to submit the 10 pound sample needed to perform the testing shown under the Lincoln lab column. Sample shall be taken at the project.	- - - - - - - - -	One 10 pound sample for gradation tests each 1000 cubic yards or fraction thereof (Duplicate of sample tested in the field)	Section 27 Note 1 Note 4
Laboratory samples must be submitted in a canvas bag or clean five gallon bucket with lid.						

MATERIAL	TYPE OF TEST	Minimum Material Certificate, Sample and Inspection Requirements				
		Q.C. SAMPLING AND TESTING BY CONTRACTOR	VERIFICATION SAMPLING AND TESTING BY NDOR			LOCATION OF ADDITIONAL INFORMATION
Section: 13 – Granular Base, Granular Fill, Granular Backfill, Sand Blanket and MSE Walls (continued)			FIELD PERSONNEL	BRANCH LAB	LINCOLN LAB	.
5) Soil Binder	Plasticity Index & Gradation	- - - - - - - - - -	One sample for gradation tests each 50 cubic yards or fraction thereof. (The recommended sample size is 10 pounds). If less than 10 percent retained on the No. 200 sieve, one sample for each 200 cubic yards or fraction thereof. Project personnel to submit the 10 pound sample needed to perform the testing shown under the Lincoln lab column. Samples shall be taken at the project.	- - - - - - - - - -	One 10 pound sample for gradation test (lab to run P.I.) each 1000 cubic yards or fraction thereof (Duplicate of sample tested in the field)	- - -
Laboratory samples must be submitted in a canvas bag or clean five gallon bucket with lid.						

MATERIAL	TYPE OF TEST	Minimum Material Certificate, Sample and Inspection Requirements				
		Q.C. SAMPLING AND TESTING BY CONTRACTOR	VERIFICATION SAMPLING AND TESTING BY NDOR			LOCATION OF ADDITIONAL INFORMATION
Section: 13 – Granular Base, Granular Fill, Granular Backfill, Sand Blanket and MSE Walls (continued)			FIELD PERSONNEL	BRANCH LAB	LINCOLN LAB	
6) Granular Base, Granular Fill, Granular Backfill and Sand Blanket	Moisture – Density	- - - - - - - - - -	In place moisture density tests for each 1000 feet, or less and for each one foot in thickness, or fraction thereof. In cases of short section, moisture density tests to confirm the Project Managers judgment on compliance with specification requirements. NOTE: If the layer is 2" or less, in thickness, density tests may be omitted. If curve data is not furnished, as in cases of some pit run materials, it will be necessary for the project personnel to submit the necessary samples to the Lincoln or Branch laboratories for the determination of this information.	One sample to be submitted if necessary to perform curve data.	One 60 pound sample to be submitted if necessary to perform curve data.	- - -
	Gradation (if specified)	- - - - - - - - -	Each fifth station for gradation or in cases of short sections the number of samples is to be increased to adequately represent the material in the fill. (The recommended sample size is 25 pounds) Project personnel will supply the 10 pound sample needed to perform the testing shown under the Lincoln Lab column. Sample to be taken at the project.	- - - - - - - - -	One 10 pound sample for gradation test each mile, or in cases of short sections the number of samples is to be increased to adequately correlate the samples taken in the field (Duplicate of sample tested in the field)	Section 27 Note 1 Note 4
Laboratory samples must be submitted in a canvas bag or clean five gallon bucket with lid.						

MATERIAL	TYPE OF TEST	Minimum Material Certificate, Sample and Inspection Requirements				
		Q.C. SAMPLING AND TESTING BY CONTRACTOR	VERIFICATION SAMPLING AND TESTING BY NDOR			LOCATION OF ADDITIONAL INFORMATION
Section: 13 – Granular Base, Granular Fill, Granular Backfill, Sand Blanket and MSE Walls (continued)			FIELD PERSONNEL	BRANCH LAB	LINCOLN LAB	
7) Stabilized Portion of Granular Base, Granular Fill, Granular Backfill and Sand Blanket	Moisture – Density	- - - - - - - - - -	In place moisture-density tests for each 1000 feet, or less, or in cases of short sections, moisture-density tests to confirm the Project Manager's judgment on compliance with specification requirements. If tested layer is disturbed by construction operations, rain etc., check tests shall be taken to assure compliance with specifications prior to subsequent construction. The sample shall be taken at the project.	- - - - - - - - - -	- - - - - - - - - - -	- - -
	Gradation (if specified)	- - - - - - - - - -	One sample each fifth station for gradation, or in cases of short sections the number of samples is to be increased to adequately represent the material in the field. (The recommended sample size is 25 pounds) Project personnel will supply the 10 pound sample needed to perform the testing shown under the Lincoln Lab column. The sample shall be taken at the project.	- - - - - - - - - -	One 10 pound sample for gradation test each mile, or in case of short sections the number of samples is to be increased to adequately correlate the samples taken in the field. (Duplicate of sample tested in the field)	- - -
Laboratory samples must be submitted in a canvas bag or clean five gallon bucket with lid.						

MATERIAL	TYPE OF TEST	Minimum Material Certificate, Sample and Inspection Requirements				
		Q.C. SAMPLING AND TESTING BY CONTRACTOR	VERIFICATION SAMPLING AND TESTING BY NDOR			LOCATION OF ADDITIONAL INFORMATION
Section: 13 – Granular Base, Granular Fill, Granular Backfill, Sand Blanket and MSE Walls (continued)			FIELD PERSONNEL	BRANCH LAB	LINCOLN LAB	
8) Granular Backfill for Structures	Quality & Gradation	- - - - - - - - - -	One sample for gradation tests each 50 cubic yards or fraction thereof. (The recommended sample size is 25 pounds) Project personnel will submit the 10 and 60 pound samples needed to perform the testing shown under the Lincoln lab column. The sample shall be taken at the project.	- - - - - - - - - -	One 60 pound sample for quality tests if so designated on DR FORM 324 "Source of Aggregates to be Used", or when changes in quality or characteristics occur. One 10 pound sample for gradation tests each 150 cubic yards or fraction thereof (Duplicate of sample tested in the field)	Section 27 Note 1 Note 4
	Moisture – Density	- - - - - - - - - -	In place density test each lift of aggregate placed. In case of short sections moisture density tests to confirm compliance with specifications. Project personnel will supply the 60 pound sampled needed to perform the testing shown under the Lincoln Lab column. The sample shall be taken on the project.	- - - - - - - - - -	One 60 pound sample for compaction curve data.	- - -
Laboratory samples must be submitted in a canvas bag or clean five gallon bucket with lid.						

MATERIAL	TYPE OF TEST	Minimum Material Certificate, Sample and Inspection Requirements				
		Q.C. SAMPLING AND TESTING BY CONTRACTOR	VERIFICATION SAMPLING AND TESTING BY NDOR			LOCATION OF ADDITIONAL INFORMATION
Section: 13 – Granular Base, Granular Fill, Granular Backfill, Sand Blanket and MSE Walls (continued)			FIELD PERSONNEL	BRANCH LAB	LINCOLN LAB	
9) Granular Subdrains	FAA, Gradation, Quality & Compaction	- - - - - - - - - -	One sample for gradation tests each 50 cubic yards or fraction thereof. (The recommended sample size is 25 pounds) Project personnel will supply the 10 and 60 pound samples needed to perform the testing shown under the Lincoln Lab column. The sample shall be taken at the project.	- - - - - - - - - -	One 60 pound sample for compaction curve data as necessary. One 40 pound sample for gradation tests each 150 cubic yards of aggregate. (Duplicate of sample tested in the field)	Section 27 Note 1 Note 4
10) Granular Backfill for Pipe Underdrain	Gradation, Quality & Compaction	- - - - - - - - - -	One sample for gradation tests each 50 cubic yards or fraction thereof. (The recommended sample size is 25 pounds) Project personnel will supply the 10 and 60 pound samples needed to perform the testing shown under the Lincoln lab column. The sample shall be taken at the project.	- - - - - - - - - -	One 60 pound sample for compaction curve data as necessary. One 10 pound sample for gradation tests each 150 cubic yards of aggregate. (Duplicate of sample tested in the field)	Section 27 Note 1 Note 4
Laboratory samples must be submitted in a canvas bag or clean five gallon bucket with lid.						

MATERIAL	TYPE OF TEST	Minimum Material Certificate, Sample and Inspection Requirements				
		Q.C. SAMPLING AND TESTING BY CONTRACTOR	VERIFICATION SAMPLING AND TESTING BY NDOR			LOCATION OF ADDITIONAL INFORMATION
Section: 13 – Granular Base, Granular Fill, Granular Backfill, Sand Blanket and MSE Walls (continued)			FIELD PERSONNEL	BRANCH LAB	LINCOLN LAB	
11) Select & Random Granular Backfill for MSE Walls	Quality Gradation Compaction Chemical Friction Angle	Before the wall is constructed, the Contractor shall furnish to the Engineer a Certificate of Compliance certifying that the Granular backfill material complies with Section 714 or 715 of the Specifications. If more than one source is used, a Certificate of Compliance is Required from each Source.	Project personnel will submit one 60 pound sample per Wall needed to perform the testing shown under the Lincoln Lab column. No further samples required if material is from the same source (pit location) or unless changes in Quality or Characteristics occur. One Gradation for every 1000 cubic yards of material or portion thereof.	- - - - - - - - - -	One 60 pound sample for quality, gradation, compaction and chemical tests.	- - -
Laboratory samples must be submitted in a canvas bag or clean five gallon bucket with lid.						

Materials Sampling Guide

Table of Contents

Section 14

Portland Cement/Blended Cement/Fly Ash/Ground Granulated Blast Furnace Slag/Silica Fume

1. Portland Cement…… Page 14-1
2. Blended Cement…… Page 14-1
3. Fly Ash……Page 14-2
4. Ground Granulated Blast Furnace Slag (GGBFS)……...Page 14-2
5. Silica Fume…… Page 14-2

MATERIAL	TYPE OF TEST	Minimum Material Certificate, Sample and Inspection Requirements				
		Q.C. SAMPLING AND TESTING BY CONTRACTOR	VERIFICATION SAMPLING AND TESTING BY NDOR			LOCATION OF ADDITIONAL INFORMATION
Section: 14 – Portland Cement/Blended Cement/Fly Ash/Ground Granulated Blast Furnace Slag/Silica Fume			**FIELD PERSONNEL**	**BRANCH LAB**	**LINCOLN LAB**	
1) Portland Cement	Quality	- - - - - - - - - -	Refer to the Approved Products List. Cement is sampled at the cement mill and accepted for use with a manufacturer's certification. A one gallon sample is required when requested by the Materials and Research Division, the inspector questions the material, or the material has been in storage for 90 days or more. Sample to be submitted to the Lincoln Laboratory.	One gallon sample from each concrete producing facility each calendar year. This sample is to be submitted to the Lincoln Laboratory.	One gallon sample when submitted from cement mill or field.	Section 29 Policy 4
2) Blended Cement	Quality	- - - - - - - - - -	Refer to the Approved Products List. Blended cement is sampled at the blended cement mill and accepted for use with a manufacturer's certification. A one gallon sample is required when requested by the Materials and Research Division, the inspector questions the material, or the material has been in storage for 90 days or more. Sample to be submitted to the Lincoln Laboratory.	One gallon sample from each concrete producing facility each calendar year. This sample is to be submitted to the Lincoln Laboratory.	One gallon sample when submitted from cement mill or field.	Section 29 Policy 4

MATERIAL	TYPE OF TEST	Minimum Material Certificate, Sample and Inspection Requirements				
		Q.C. SAMPLING AND TESTING BY CONTRACTOR	VERIFICATION SAMPLING AND TESTING BY NDOR			LOCATION OF ADDITIONAL INFORMATION
Section: 14 – Portland Cement/Blended Cement/Fly Ash/Ground Granulated Blast Furnace Slag/Silica Fume			**FIELD PERSONNEL**	**BRANCH LAB**	**LINCOLN LAB**	
3) Fly Ash	Quality	- - - - - - - - - -	Refer to the Approved Products List. Fly Ash is sampled at the fly ash plant and is accepted for use with a manufacturer's certification. A one gallon sample is required when requested by the Materials and Research Division, the inspector questions the material or the material has been in storage for 90 days or more. Sample to be submitted to the Lincoln Laboratory.	One gallon sample from each concrete producing facility each calendar year. This sample is to be submitted to the Lincoln Laboratory.	One gallon sample when submitted from fly ash plant or field.	Section 29 Policy 7
4) Ground Granulated Blast Furnace Slag (GGBFS)	Quality	- - - - - - - - - -	Refer to the Approved Products List. A one gallon sample is required when requested by the Materials and Research Division, the inspector questions the material, or the material has been in storage for 90 days or more. Sample to be submitted to the Lincoln Laboratory.	One gallon sample from each concrete producing facility each calendar year. This sample is to be submitted to the Lincoln Laboratory.	One gallon sample when submitted from cement mill or field.	Section 29 Policy 6
5) Silica Fume	Quality	- - - - - - - - - -	Refer to the Approved Products List. Silica Fume is accepted for use with a manufacturer's certification. A one gallon sample is required when requested by the Materials and Research Division, the inspector questions the material, or the material has been in storage for 90 days or more. Sample to be submitted to the Lincoln Laboratory.	- - - - - - - - - -	- - - - - - - - - -	- - -

Materials Sampling Guide

Table of Contents

Section 15

Portland Cement Concrete for Pavement, Base Course, Pavement Patching

1. Coarse Aggregate – Gradation & Quality…….. Page 15-1
2. Fine Aggregate Sand Gravel – Gradation & Quality…… Page 15-1
3. All Aggregates – Moisture…… Page 15-2
4. Mixing Water – Quality…… Page 15-2
5. Plastic Concrete – Air Content …….. Page 15-2
6. Concrete Test Cylinders – Compressive Strength……... Page 15-2
7. Concrete Cores – Slab Thickness…….. Page 15-3
8. PCC Pavement…….…… Page 15-3
9. Concrete Curing Materials……Page 15-4
   A) Liquid Compounds……Page 15-4
   B) Plastic Film……Page 15-4
   C) Burlap Cloth…….. Page 15-4
10. Reinforcement Bars (Including Dowel Bars) ……..…….. Page 15-4
11. Welded Steel Wire Fabric…….. Page 15-4
12. Deformed Metal Joint Material…….. Page 15-4
13. Elastomeric Compression Joint Seal……Page 15-4
14. Lubricant Adhesive for Elastomeric Compression Joint Seals……Page 15-4
15. Epoxy Compound…… Page 15-4
16. Joint Sealing Fillers…… Page 15-4
   A) Cold Poured Type……Page 15-4
   B) Hot Poured Type…….. Page 15-4
17. Load Transfer Devices for Reinforced Concrete Pavement Joints…… Page 15-5
18. Preformed Joint Filler……..Page 15-5
   A) Non-Extruding…… Page 15-5
   B) Bituminous…… Page 15-5
   C) Sponge Rubber……Page 15-5

Materials Sampling Guide

Table of Contents

Section 15

Portland Cement Concrete for Pavement, Base Course, Pavement Patching (continued)

19. Pressure Relief Joint Filler, Preformed Flexible Polyurethane……Page 15-5
20. Air-Entraining Agent and Concrete Admixtures…… Page 15-5
21. Calcium Chloride…… Page 15-5

MATERIAL	TYPE OF TEST	Minimum Material Certificate, Sample and Inspection Requirements				
		Q.C. SAMPLING AND TESTING BY CONTRACTOR	VERIFICATION SAMPLING AND TESTING BY NDOR			LOCATION OF ADDITIONAL INFORMATION
Section 15 - Portland Cement Concrete For Pavement, Base Course, Base Course Widening, Pavement Patching, Etc.			**FIELD PERSONNEL**	**BRANCH LAB**	**LINCOLN LAB**	
1) Coarse Aggregates	Gradation & Quality	----------	One gradation test for each 750 cubic yards of aggregate, or fraction thereof, for acceptance either at the plant or on the project. Minimum of one gradation test for each day's operation. The number of samples taken from the plant is determined by plant volume supplied to State and Federal projects, not per project (the recommended sample size is 50 pounds). Project personnel will supply the 60 pound sample needed to perform the testing shown under the Lincoln Lab column.	----------	One 60 pound sample for quality and gradation tests each 2,250 cubic yards, or fraction thereof.(Duplicate of sample tested in the field)	Section 27 Note 1 Note 5
2) Fine Aggregate Sand Gravel	Gradation & Quality	----------	One gradation test for each 750 cubic yards of aggregate, or fraction thereof, for acceptance either at the plant or on the project. . Minimum of one gradation test for each day's operation. The number of samples taken from the plant is determined by plant volume supplied to State and Federal projects, not per project (the recommended sample size is 25 pounds) Project personnel will supply the 10 and 60 pound samples needed to perform the testing shown under the Lincoln lab column.	----------	One 60 pound sample for quality test first 2,250 cubic yards if designated on DR FORM 324 "Source of Aggregates to be Used" One 10 pound sample for gradation tests each 2,250 cubic yards, or fraction thereof, thereafter. (Duplicate of sample tested in the field)	Section 27 Note 1 Note 4

MATERIAL	TYPE OF TEST	Minimum Material Certificate, Sample and Inspection Requirements				
		Q.C. SAMPLING AND TESTING BY CONTRACTOR	VERIFICATION SAMPLING AND TESTING BY NDOR			LOCATION OF ADDITIONAL INFORMATION
Section 15 - Portland Cement Concrete For Pavement, Base Course, Base Course Widening, Pavement Patching, Etc. (continued)			**FIELD PERSONNEL**	**BRANCH LAB**	**LINCOLN LAB**	
3) All Aggregates	Moisture	----------	Determinations as necessary for adequate control of aggregate proportions and total water content of the concrete. A minimum of one for every 1/3 day of operation.	----------	----------	Section 27 Note 1
4) Mixing Water	Quality	----------	One Gallon sample to be submitted to Lincoln Lab, when of questionable nature.	----------	Mixing water will be tested in the Lincoln Laboratory.	- - -
5) Plastic Concrete	Air Content	----------	Paving First load and then one per 300 cubic yards Patching Minimum of one test each one-third day's operation or sufficient number for proper control.	----------	----------	Section 27 Note 1 Note 6 Section 29 Policy 5
	Slump	----------	Minimum of one test for each day's operation, or sufficient number for proper control.	----------	----------	- - -
6) Concrete Test Cylinders	Compressive Strength	----------	One set of four concrete cylinders representing each days concrete placement. Cylinders will be tested in the Branch Lab or Lincoln Lab.	Cylinders will be tested in the Branch Lab or Lincoln Lab.	Cylinders will be tested in the Branch Lab or Lincoln Lab.	Section 27 Note 1 Note 6

MATERIAL	TYPE OF TEST	Minimum Material Certificate, Sample and Inspection Requirements				
		Q.C. SAMPLING AND TESTING BY CONTRACTOR	VERIFICATION SAMPLING AND TESTING BY NDOR			LOCATION OF ADDITIONAL INFORMATION
Section 15 - Portland Cement Concrete For Pavement, Base Course, Base Course Widening, Pavement Patching, Etc. (continued)			**FIELD PERSONNEL**	**BRANCH LAB**	**LINCOLN LAB**	
7) Concrete Cores	Slab Thickness	----------	----------	----------	To be sampled by the Materials & Research Division in accordance with the Standard Specifications or Special Provisions.	- - -
8) PCC Pavement	Surface Smoothness	Contractor performs all QC pavement smoothness testing specified in the NDOR Standard Specifications for Highway Construction and/or Project Special Provisions.	Approximately 10 percent of contractor's results shall be randomly verified. Project personnel will submit requests for pavement smoothness verification testing to the following individuals: District 1,2,4,5,6,7,8 Ron Bohling, Lincoln. District 3 Rob Davis, Norfolk. Submit requests at least 7 days in advance to allow for scheduling.	-------	------	----

Item or Group	Minimum Material Certificate, Test and Inspection Requirements				
	Sample Required ***(Tests to be made at Lincoln laboratory)***	**Approved Products Lists**	**Manufacturer Certified Tests Required**	**Manufacturer Certification of Compliance Required**	**Location of Additional Information**
SECTION: 15 – PORTLAND CEMENT CONCRETE FOR PAVEMENT, BASE COURSE, BASE COURSE WIDENING, PAVEMENT PATCHING, ETC. (continued)					
9) Concrete Curing Materials					
A) Liquid Compounds	Yes – One quart sample from each lot or batch unless shipped from tested and approved stock.	No	No	No	Section 27 Note 8
B) Plastic Film	No	No	No	No	- - -
C) Burlap Cloth	No	No	No	No	- - -
10) Reinforcement Bars (Including Dowel Bars)	Yes – Two samples six foot long from every bar designation and heat number unless shipped from tested and approved stock.	No	Yes	No	Section 27 Note 9
11)Welded Steel Wire Fabric	Yes – One sample 36 inches square from each 75,000 square feet of fabric unless shipped from tested and approved stock.	No	No	No	Section 27 Note 9
12) Deformed Metal Joint Material	No – Project Manager shall check material for compliance with Standard Plans.	No	No	No	- - -
13) Elastomeric Compression Joint Seal	No	No	No	Yes	- - -
14) Lubricant Adhesive for Elastomeric Compression Joint Seals	No sample required. However, material should be as recommended or approved by the manufacturer for use with the joint seal.	No	No	No	- - -
15) Epoxy Compound	No	Yes	No	Yes	- - -
16) Joint Sealing Fillers					
A) Cold Poured Type	Yes – One five pound sample from each lot, unless shipped from tested and approved stock.	No	No	No	- - -
B) Hot Poured Type	Yes – Either one five pound pail or the plastic wrapped portion representing each lot, unless shipped from tested and approved stock.	Yes	No	No	- - -

Item or Group	Minimum Material Certificate, Test and Inspection Requirements				
	Sample Required ***(Tests to be made at Lincoln laboratory)***	**Approved Products Lists**	**Manufacturer Certified Tests Required**	**Manufacturer Certification of Compliance Required**	**Location of Additional Information**
SECTION 15: PORTLAND CEMENT CONCRETE FOR PAVEMENT, BASE COURSE, BASE COURSE WIDENING, PAVEMENT PATCHING, ETC. (continued)					
17) Load Transfer Device Assemblies for Reinforced Concrete Pavement Joints	Yes – See Standard Specifications for Highway Construction or Special Provisions.	No	No	Yes	- - -
18) Preformed Joint Filler					
A) Non-extruding	No	Yes	No	No	- - -
B) Bituminous	No	Yes	No	No	- - -
C) Sponge Rubber	No	Yes	No	No	- - -
19) Pressure Relief Joint Filler, Preformed Flexible Polyurethane	Yes – One sample five inches wide and 30 inches long from each shipment of 1000 square feet or less of each thickness and kind, unless shipped from tested and approved stock, or specified brands used	No	No	Yes	- - -
20) Air-Entraining Agent and Concrete Admixtures.	No	Yes	No	No	Section 27 Note 7
21) Calcium Chloride	No	No	Yes	Yes	- - -

Materials Sampling Guide

Table of Contents

Section 16

Portland Cement Concrete For Structures, Culverts and Miscellaneous Construction

1. Coarse Aggregate – Gradation & Quality…….. Page 16-1
2. Fine Aggregate Sand Gravel – Gradation & Quality…… Page 16-1
3. Lightweight Aggregate – Gradation & Quality…….. Page 16-2
4. All Aggregates – Moisture…… Page 16-2
5. Mixing Water – Quality…….. Page 16-2
6. Plastic Concrete –Air Content & Slump…… Page 16-3
7. Lightweight Concrete – Air Content, Slump & Unit Weight ..... Page 16-3
8. Concrete Test Cylinders – Compressive Strength……... Page 16-4
9. Concrete Curing Materials…… Page 16-5
   A) Liquid Compounds…… Page 16-5
   B) Plastic Film…… Page 16-5
   C) Burlap Cloth…… Page 16-5
10. Reinforcement Bars (Including Dowel bars)…….. Page 16-5
11. Welded Steel Wire Fabric…….. Page 16-5
12. Air-Entraining Agent and Concrete Admixtures……Page 16-5

MATERIAL	TYPE OF TEST	Minimum Material Certificate, Sample and Inspection Requirements				
		Q.C. SAMPLING AND TESTING BY CONTRACTOR	VERIFICATION SAMPLING AND TESTING BY NDOR			LOCATION OF ADDITIONAL INFORMATION
Section 16 - Portland Cement Concrete For Structures, Culverts, and Miscellaneous Construction			**FIELD PERSONNEL**	**BRANCH LAB**	**LINCOLN LAB**	
1) Coarse Aggregates	Gradation & Quality	----------	One gradation test for each 750 cubic yards of aggregate, or fraction thereof, for acceptance either at the plant or on the project. Minimum of one gradation test for each day's operation. The number of samples taken from the plant is determined by plant volume supplied to State and Federal projects, not per project. (the recommended sample size is 50 pounds) Project personnel to submit 60 pound sample needed to perform the testing shown under the Lincoln Lab column.	----------	One 60 pound sample for quality and gradation tests each 2,250 cubic yards, or fraction thereof. (Duplicate of sample tested in the field)	Section 27 Note 1 Note 5
2) Fine Aggregate Sand Gravel	Gradation & Quality	----------	One gradation test for each 750 cubic yards of aggregate, or fraction thereof, for acceptance either at the plant or on the project. Minimum of one gradation test for each day's operation. The number of samples taken from the plant is determined by plant volume supplied to State and Federal projects, not per project (The recommended sample size is 25 pounds) Project personnel to submit the 10 and 60 pound sample needed to perform the testing shown under the Lincoln lab column.	----------	One 60 pound sample for quality test first 2,250 cubic yards, if so designated on DR FORM 324 "Source of Aggregates to be Used" One 10 lb. sample for gradation tests each 2,250 cubic yards, or fraction thereof. (Duplicate of sample tested in the field)	Section 27 Note 1 Note 4

MATERIAL	TYPE OF TEST	Minimum Material Certificate, Sample and Inspection Requirements				
		Q.C. SAMPLING AND TESTING BY CONTRACTOR	VERIFICATION SAMPLING AND TESTING BY NDOR			LOCATION OF ADDITIONAL INFORMATION
Section 16- Portland Cement Concrete For Structures, Culverts, and Miscellaneous Construction (continued)			FIELD PERSONNEL	BRANCH LAB	LINCOLN LAB	
3) Lightweight Aggregate	Gradation & Quality	----------	See Specifications, Supplemental Specifications and/or Project Special Provisions Project personnel to submit the 20 pound sample needed to perform the testing shown under the Lincoln Lab column.	See Specifications, Supplemental Specifications and/or Project Special Provisions	One 20 pound sample per project	- - -
4) All Aggregates	Moisture	----------	Determinations as necessary for adequate control of aggregate proportions and total water content of the concrete. A minimum of once for each one-third day's operation.	----------	----------	Section 27 Note 1
5) Mixing Water	Quality	----------	One Gallon sample to be submitted to Lincoln Lab, when of questionable nature.	----------	Mixing water will be tested in the Lincoln Laboratory.	- - -

MATERIAL	TYPE OF TEST	Minimum Material Certificate, Sample and Inspection Requirements				
		Q.C. SAMPLING AND TESTING BY CONTRACTOR	VERIFICATION SAMPLING AND TESTING BY NDOR			LOCATION OF ADDITIONAL INFORMATION
Section: 16 – Portland Cement Concrete For Structures, Culverts, and Miscellaneous Construction (continued)			FIELD PERSONNEL	BRANCH LAB	LINCOLN LAB	
6) Plastic Concrete	Air Content	----------	First load and then test one-third day's operation, or sufficient number for proper control. <u>Bridge Deck</u> Air content shall be taken in front of the paver on the deck.	----------	----------	Section 27 Note 7 Section 29 Policy 5
	Slump	----------	Minimum of one test for each day's operation, or sufficient number for proper control. Except for patching.	----------	----------	
7) Lightweight Concrete	Air Content	----------	First load and then test one-third day's operation, or sufficient number for proper control. <u>Bridge Deck</u> Air content shall be taken in front of the paver on the deck.	----------	----------	Section 27 Note 7 Section 29 Policy 5
	Slump	----------	Minimum of one test for each day's operation, or sufficient number for proper control. Except for patching.	----------	----------	
	Unit Weight	----------	<u>Bridge Deck</u> Unit weight shall be taken in front of the paver on the deck.	----------	----------	

MATERIAL	TYPE OF TEST	Minimum Material Certificate, Sample and Inspection Requirements			
		Q.C. SAMPLING AND TESTING BY CONTRACTOR	VERIFICATION SAMPLING AND TESTING BY NDOR		
Section: 16 – Portland Cement Concrete For Structures, Culverts, and Miscellaneous Construction (continued)			FIELD PERSONNEL	BRANCH LAB	LINCOLN LAB
8) Concrete Test Cylinders	Compressive Strength	----------	One set of three cylinders for the first 100 cubic yards. A second set of three cylinders are required if the days placement of concrete exceeds 100 cubic yards. Cylinders will be tested in the Branch Lab or the Lincoln Lab.	Cylinders will be tested in the Branch Lab or Lincoln Lab.	Cylinders will be tested in the Branch Lab or Lincoln Lab.

Item or Group	Minimum Material Certificate, Test and Inspection Requirements				
	Sample Required ***(Tests to be made at Lincoln laboratory)***	**Approved Products Lists**	**Manufacturer Certified Tests Required**	**Manufacturer Certification of Compliance Required**	**Location of Additional Information**
SECTION: 16 – Portland Cement Concrete For Structures, Culverts and Miscellaneous Construction (continued)					
9) Concrete Curing Materials					- - -
A) Liquid Compounds	Yes – One quart sample from each lot or batch unless shipped from tested and approved stock.	No	No	No	Section 27 Note 8
B) Plastic Film	No	No	No	No	- - -
C) Burlap Cloth	No	No	No	No	- - -
10) Reinforcement Bars (Including Dowel Bars)	Yes – Two samples six foot long from every bar designation and heat number unless shipped from tested and approved stock.	No	Yes	No	Section 27 Note 9
11) Welded Steel Wire Fabric	Yes – One sample 36 inches square from each 75,000 square feet of fabric unless shipped from tested and approved stock.	No	No	No	Section 27 Note 9
12) Air-Entraining Agent and Concrete Admixtures	No	Yes	No	No	Section 27 Note 7

Materials Sampling Guide

Table of Contents

Section 17

Guard Rail

1. Beam Guard Rail……... Page 17-1
A) Beam Element…….. Page 17-1
B) Steel Posts, End Posts, Special Posts, Adapter Plates…….. Page 17-1
C) End Anchor Assembly and Breakaway Terminal Section…….. Page 17-1
D) Miscellaneous Hardware, Bolts, Washers, etc……. Page 17-1
E) Wood Guard Rail Posts and Blocks…….. Page 17-1
F) Insert Assembly…….. Page 17-1
2. Cable Guard Rail……... Page 17-1
A) Cable…….. Page 17-1
B) Posts and Hook Bolts…….. Page 17-1
C) Tension Spring Assemblies……. Page 17-1
D) Anchor Assemblies…….. Page 17-1

Item or Group	Minimum Material Certificate, Test and Inspection Requirements				
	Sample Required ***(Tests to be made at Lincoln laboratory)***	**Approved Products Lists**	**Manufacturer Certified Tests Required**	**Manufacturer Certification of Compliance Required**	**Location of Additional Information**
SECTION: 17 – Guard Rail					
1) Beam Guard Rail					
A) Beam Element	Yes – At least one sample of each of the items used in the guard rail assembly unless shipped from tested and approved stock. Sample will be returned.	No	Yes	No	Section 27 Note 10
B) Steel Posts, End Posts, Special Posts, Adaptor Plates	Yes – At least one sample of each of the items used in the guard rail assembly unless shipped from tested and approved stock. Sample will be returned.	No	Yes	No	Section 27 Note 1 Note 10
C) End Anchor Assembly and Breakaway Terminal Section	Yes – At least one sample of each the items used in the guard rail assembly unless shipped from tested and approved stock. Sample will be returned.	No	No	Yes	Section 27 Note 10
D) Miscellaneous Hardware Bolts, Washers, etc.	Yes – At least one sample of each of the items used in the guard rail assembly unless shipped from tested and approved stock.	No	No	Yes	Section 27 Note 1 Note 10
E) Wood Guard Rail Posts and Blocks	No – Unless requested by the Materials and Research Division.	No	See Note	See Note	Section 27 Note 25
F) Insert Assembly	No – Unless requested by the Materials and Research Division	No	No	Yes	- - - - - -
2) Cable Guard Rail					
A) Cable	Yes – At least one sample 6 ft long from each reel unless shipped from tested and approved stock.	No	Yes	No	Section 27 Note 10
B) Posts and Hook Bolts	Yes – At least one sample of each of the items used in the guard rail assembly unless shipped from tested and approved stock. Sample will be returned.	No	No	Yes	Section 27 Note 10
C) Tension Spring Assemblies	Yes – At least one sample of each of the items used in the guard rail assembly unless shipped from tested and approved stock.	No	No	Yes	Section 27 Note 10
D) Anchor Assemblies	Yes – At least one sample of each of the items used in the guard rail assembly unless shipped from tested and approved stock. Sample will be returned.	No	No	Yes	Section 27 Note 10

Materials Sampling Guide

Table of Contents

Section 18

Fence Materials

1. Barbed Wire……Page 18-1
2. Chain Link……...Page 18-1
3. Fence Fasteners and Ties……Page 18-1
4. Fittings and Hardware……...Page 18-1
5. Staples……Page 18-1
6. Steel “T” Line Posts……...Page 18-1
7. Tension Wire…….. Page 18-1
8. Tubular “H” and “C” Sections for Post Braces, Top Rail, etc……...Page 18-1
9. Wooden Posts…… Page 18-1
10. Woven Wire……...Page 18-1

Item or Group	Minimum Material Certificate, Test and Inspection Requirements				
	Sample Required ***(Tests to be made at Lincoln laboratory)***	**Approved Products Lists**	**Manufacturer Certified Tests Required**	**Manufacturer Certification of Compliance Required**	**Location of Additional Information**
SECTION: 18 – Fence Materials					
1) Barbed Wire	Yes – One sample 4 ft long from one of each 50 spools	No	No	No	Section 27 Note 1
2) Chain Link	Yes – One sample 4 ft long from one of each 50 spools	No	No	No	Section 27 Note 1
3) Fence Fasteners and Ties	Yes – Five from each 1000 lbs	No	No	No	Section 27 Note 1
4) Fittings and Hardware	Yes – One sample of each item. Samples will be returned.	No	No	No	Section 27 Note 1
5) Staples	Yes – Five staples from one of each 15 kegs or each 1000 lbs	No	No	No	Section 27 Note 1
6) Steel “T” Line Posts	Yes – One post from each 5000 posts or fraction thereof. Samples will be returned.	No	No	No	Section 27 Note 1
7) Tension Wire	Yes – One sample 4 ft long from each 2000 lb or fraction thereof.	No	No	No	Section 27 Note 1
8) Tubular “H” and “C” Sections for Post Braces, Top Rail, etc.	Yes – One full section sample from each lot. Samples will be returned.	No	No	No	Section 27 Note 1
9) Wooden Posts	No – Unless required by the Materials & Research Division	No	See Note	See Note	Section 27 Note 1 Note 25
10) Woven Wire	Yes – One sample 3 ft long from one of each 50 rolls	No	No	No	Section 27 Note 1

Materials Sampling Guide

Table of Contents

Section 19

Culvert Pipe, Drain Tile, Sewer Pipe, Slope Drains, etc.

1. Culvert Pipe…… Page 19-1
   A) Zinc Coated Galvanized Steel, Aluminum Coated Steel, Polymer Coated Steel, Plastic……Page 19-1
      a) Culverts (all shapes)……Page 19-1
      b) Culverts (plastic)…….. Page 19-1
      c) Underdrains…….. Page 19-1
      d) Flared End Sections…… Page 19-1
      e) Structural Plate Pipe……Page 19-1
   B) Concrete……Page 19-1
      a) Culverts (all shapes)……Page 19-1
      b) Flared End Sections…… Page 19-1
2. Drain Tile……Page 19-1
   A) Concrete……Page 19-1
   B) Bituminous Fiber…… Page 19-1
3. Sewer Pipe…… Page 19-2
   A) Ductile Iron Pipe and Fittings……Page 19-2
   B) Plastic…… Page 19-2
   C) Reinforced Concrete……...Page 19-2
4. Slope Drains (Metal)…… Page 19-2
5. Related Materials…….. Page 19-2
   A) Sealing Compound for Concrete Pipe Joints……..Page 19-2
   B) Bituminous Plastic Cement…… Page 19-2
   C) Sewer Joint Compound……Page 19-2
   D) Sewer Pipe Gaskets……... Page 19-2
   E) Flexible Pipe Joints…… Page 19-2
   F) Post Applied Coatings……Page 19-2

Item or Group	Minimum Material Certificate, Test and Inspection Requirements				
	Sample Required ***(Tests to be made at Lincoln laboratory)***	**Approved Products Lists**	**Manufacturer Certified Tests Required**	**Manufacturer Certification of Compliance Required**	**Location of Additional Information**
SECTION: 19 – Culvert Pipe, Drain, Tile, Sewer Pipe, Slope Drains and Related Materials					
1) Culvert					
A) Zinc Coated Galvanized Steel, Aluminum Coated Steel, Polymer Coated Steel, Plastic		See Section VI for Applicable Joint and Coating Information	- - -	- - -	- - - - - -
a) Culverts (all shapes)	No	No	No	Yes	Section 27 Note 11
b) Culverts (plastic)	YES – One 10' Section from each lot.	No	No	Yes	Section 27 Note 11
c) Underdrains	Yes – One 24 inch sample of each size to include markings	No	No	Yes	Section 27 Note 11
d) Flared End Sections	No	No	No	Yes	Section 27 Note 11
e) Structural Plate Pipe	Yes – The coupon attached should be submitted for testing. If no coupon, a sample approximately 3 inches square should be submitted. The Project Manager shall advise the Materials and Research Division in writing as to the length, brand, size and heat numbers of the pipe.	No	Yes	No	- - -
B) Concrete					
a) Culverts (all shapes)	No	No	No	No	*
b) Flared End Sections	No	No	No	No	*
2) Drain Tile					
A) Concrete	Yes – One-half of one percent of pipe required for a project. Minimum of one pipe section for each diameter.	No	No	No	Section 27 Note 1
B) Bituminous Fiber	Yes – One-half of one percent of pipe required for a project. Minimum of one pipe section for each diameter.	No	No	No	Section 27 Note 1
* See Section 29, Page 3-1 "Policy Concerning Testing, Inspection and Reporting of Reinforced Concrete Culvert and Sewer Pipe and Concrete Flared End Sections"					

Item or Group	Minimum Material Certificate, Test and Inspection Requirements				
	Sample Required ***(Tests to be made at Lincoln laboratory)***	**Approved Products Lists**	**Manufacturer Certified Tests Required**	**Manufacturer Certification of Compliance Required**	**Location of Additional Information**
SECTION: 19 – Culvert Pipe, Drain Tile, Sewer Pipe, Slope Drains and Related Materials (continued)					
3) Sewer Pipe					
A) Ductile Iron Pipe & Fittings	No	No	No	Yes	- - - - - -
B) Plastic	Yes – One sample two feet long from each size unless pipe meets requirements shown in the special provisions. If pipe is that shown in special provisions, the Project Manager should verify diameter and advise the Materials and Research Division of the pipe markings.	No	No	Yes	Section 27 Note 11
C) Reinforced Concrete	No	No	No	No	Section 27 Note 1 *
4) Slope Drains (Metal)	No	No	No	Yes	Section 27 Note 11
5) Related Materials					
A) Sealing Compound for Concrete Pipe Joints	Yes – One sample four feet long unless shipped from tested and approved stock.	Yes	No	No	- - -
B) Bituminous Plastic Cement	Yes – One five pound (1/2 gallon) sample from each lot or batch unless shipped from tested and approved stock.	No	No	No	- - -
C) Sewer Joint Compound	No	Yes	No	No	- - -
D) Sewer Pipe Gaskets	Yes – One gasket from each lot or batch unless shipped from tested and approved stock.	Yes	No	Yes	- - -
E) Flexible Pipe Joints	No	Yes	No	No	- - -
F) Post Applied Coatings	No	Yes	No	No	- - -
* See Section 29, Page 3-1 "Policy Concerning Testing, Inspection and Reporting of Reinforced Concrete Culvert and Sewer Pipe and Concrete Flared End Sections"					

Materials Sampling Guide

Table of Contents

Section 20

Bridge Materials

1. Aluminum Filled Resilient Sealing Compound……Page 20-1
2. Asphalt Plank…… Page 20-1
3. Lock-Pin and Collar Fasteners (High Strength Steel)……Page 20-1
4. Bridge Deck Drainage System…… Page 20-1
5. Caulking and Sealing Compounds…… Page 20-1
6. Deck Joint Seal…… Page 20-1
7. Form Insulation…… Page 20-1
8. Galvanized Sheet Metal……Page 20-1
9. Galvanized Steel Wire Strand…… Page 20-1
10. Lead Sheet…… Page 20-1
11. Bolts, Nuts, Washers…… Page 20-2
A) Anchor…… Page 20-2
a) High Tensile……Page 20-2
b) Low Carbon (common)……Page 20-2
c) Swedge……Page 20-2
B) Structural Fasteners for Steel Bridges…… Page 20-2
a) High Tensile (Regular and Weather Resisting Types)……Page 20-2
b) Low Carbon (common)……Page 20-2
12. Elastomeric Bearings……Page 20-3
A) Elastomeric Bearing Pads – Neoprene or Neoprene with Steel Shim…… …Page 20-3
B) Bearing Pads – Cotton Duck…… Page 20-3
13. Fixed and Expansion Bearings, TFE Type……Page 20-3
14. Confined Elastomeric Bearings (Pot Bearings)……Page 20-3
15. Strip Seal…… Page 20-3

Materials Sampling Guide

Table of Contents

Section 20

Bridge Materials (continued)

16. Epoxy Compounds……Page 20-3
17. Grouting Materials……Page 20-3
A) Non-Shrink Grout…… Page 20-3
B) Epoxy Type……Page 20-3
18. Joint Sealing Fillers…… Page 20-3
A) Cold Poured Type……Page 20-3
B) Hot Poured Type……Page 20-3
19. Paint…… Page 20-3
20. Preformed Joint Filler……Page 20-3
21. Pressure Relief Joint Filler, Preformed Flexible Polyurethane……Page 20-4
22. Waterstop…… Page 20-4
23. Wood Piling…… Page 20-4
24. Wood Preservatives…… Page 20-4
25. Zinc (Sheet)……Page 20-4
26. Reinforcement Bars ……Page 20-4
A) Bars (Including Dowel Bars) ……Page 20-4
B) Mechanical Splices ……Page 20-4
27. Steel…… Page 20-4
A) Piling, Sheet Piling, Shells for Cast In Place Piling and Crossbracing for Piling……Page 20-4
B) Structural……Page 20-4
a) Substructure…… Page 20-4
b) Superstructure……Page 20-4
28. Precast and Prestressed Concrete Units…… Page 20-4
29. Prestressed Steel Wire Strand…… Page 20-4
30 Prestressed Fine and Coarse Aggregate. ……Page 20-4
31. Structural Steel for Concrete Girder Bridges……Page 20-5
32. Structural Fasteners for Concrete Girder Bridges……Page 20-5
A) High Tensile (Regular and Weather Resisting Types…… ...Page 20-5
B) Low Carbon (common)……Page 20-5

Item or Group	Minimum Material Certificate, Test and Inspection Requirements				
	Sample Required ***(Tests to be made at Lincoln laboratory)***	**Approved Products Lists**	**Manufacturer Certified Tests Required**	**Manufacturer Certification of Compliance Required**	**Location of Additional Information**
SECTION: 20 – Bridge Materials					
1) Aluminum Filled Resilient Sealing Compound	Yes – One pint or three-pound sample from each lot or batch unless brand from Approved Products List used.	Yes	No	No	- - -
2) Asphalt Plank	Yes – Three planks from each 1000 planks of each thickness.	No	No	No	- - -
3) Lock-Pin and Collar Fasteners (High Strength Steel)	Yes – One lock-pin and collar fastener of each size and length from each 800 or fraction thereof, unless shipped from tested and approved stock.	No	No	Yes	Section 27 Note 12
4) Bridge Deck Drainage System	No	No	No	Yes	- - -
5) Caulking and Sealing Compounds	No	Yes	No	No	- - -
6) Deck Joint Seal	No – Unless requested	No	Yes	Yes	- - -
7) Form Insulation	No - Unless requested	No	Yes	No	- - -
8) Galvanized Sheet Metal	Yes – One sample approximately 30-40 square inches from each lot or batch.	No	No	No	Section 27 Note 1
9) Galvanized Steel Wire Strand	Yes – One sample six feet long from each lot of 5000 feet or less and two samples from lots of 5000 to 30,000 feet.	No	No	No	Section 27 Note 1
10) Lead Sheet	Yes – One sample approximately 30-40 square inches from each lot or batch.	No	No	No	Section 27 Note 1

Item or Group	Minimum Material Certificate, Test and Inspection Requirements				
	Sample Required *(Tests to be made at Lincoln laboratory)*	**Approved Products Lists**	**Manufacturer Certified Tests Required**	**Manufacturer Certification of Compliance Required**	**Location of Additional Information**
SECTION: 20 – Bridge Materials (continued)					
11) Bolts, Nuts, Washers					
A) Anchor					
a) High Tensile	Unless shipped from tested and approved stock, the contractor has the option to either provide certified mill test reports on material used, or submit one sample bolt of each size to the Lincoln Lab for destructive testing. The sample must be taken by the Project Manager and must be accompanied by a manufacturer's certificate of compliance. Materials shall not be approved for incorporation into the work until certified mill tests or sample test results and certificates of compliance are in hand.	No	- - -	- - -	Section 27 Note 12
b) Low Carbon (common)	No – Project Manager to measure length and diameter. If galvanized, check in the field by use of magnetic instrument for both bolts and nuts. Report results to the Materials and Research Division on Form TL-5166.	No	No	Yes	Section 27 Note 12
c) Swedge	No – Project Manager to measure length and diameter. If galvanized, check in the field by use of magnetic instrument for both bolts and nuts. Report results to the Materials and Research Division on Form TL-5166.	No	No	Yes	Section 27 Note 12
B) Structural Fasteners for Steel Bridges a) High Tensile (Regular & Weather Resisting Types)	* Yes – 0 to 25 — 3 Bolts, Nuts & Washers 26 to 50 — 4 Bolts, Nuts & Washers 51 to 90 — 5 Bolts, Nuts & Washers 91 to 150 — 6 Bolts, Nuts & Washers 151 to 280 — 7 Bolts, Nuts & Washers 281 to 500 — 9 Bolts, Nuts & Washers 501 to 1,200 — 11 Bolts, Nuts & Washers 1,201 to 3,200 — 13 Bolts, Nuts & Washers 3,201 to 150,000 — 15 Bolts, Nuts & Washers 150,001 and over — 15 Bolts, Nuts & Washers **These samples are for destructive testing and will not be returned.** *Sample frequency is for each lot.	No	Yes	No	Section 27 Note 12
b) Low Carbon (common)	No	No	No	Yes	Section 27 Note 12

Item or Group	Minimum Material Certificate, Test and Inspection Requirements				
	Sample Required ***(Tests to be made at Lincoln laboratory)***	**Approved Products Lists**	**Manufacturer Certified Tests Required**	**Manufacturer Certification of Compliance Required**	**Location of Additional Information**
SECTION: 20 – Bridge Materials (continued)					
12) Elastomeric Bearings	No - If these bearings have not been inspected by the Bridge Division, call the Steel Fabrication Inspection Unit, at (402)479-4763 and they will be inspected on the jobsite prior to installation	No	Yes	No	- - -
A) Elastomeric Bearing Pads - Neoprene or Neoprene with Steel Shim	No – Random sampling may be performed by the Bridge Division, Steel Fabrication Unit.	No	Yes	No	- - -
B) Bearing Pads - Cotton Duck	No – Random sampling may be performed by the Bridge Division, Steel Fabrication Unit.	No	Yes	No	- - -
13) Fixed and Expansion Bearings,TFE Type	No - If these bearings have not been inspected by the Bridge Division, call the Steel Fabrication Inspection Unit, at (402)479-4763 and they will be inspected on the jobsite prior to installation.	No	Yes	Yes	- - -
14) Confined Elastomeric Bearings (Pot Bearings)	No - If these bearings have not been inspected by the Materials and Research Division, call the Physical Tests Section at (402)479-3849 and they will be inspected on the jobsite prior to installation.	No	Yes	Yes	- - -
15) Strip Seal	No	No	Yes	Yes	- - -
16) Epoxy Compounds	No	Yes	No	No	- - -
17) Grouting Material					
A) Non-Shrink Grout	No	Yes	No	No	- - -
B) Epoxy Type	No	Yes	No	No	- - -
18) Joint Sealing Fillers					
A) Cold Poured Type	Yes – One five pound minimum sample from each lot, unless shipped from tested and approved stock.	No	No	No	- - -
B) Hot Poured Type	Yes – One five pound minimum sample from each lot, unless shipped from tested and approved stock.	Yes	No	No	- - -
19) Paint	No – The contractor shall furnish a paint manufacturer's certification that the paint complies with the paint system specified.	Yes	No	Yes	Section 27 Note 1
20) Preformed Joint Filler	No	Yes	No	No	- - -

Item or Group	Minimum Material Certificate, Test and Inspection Requirements				
	Sample Required ***(Tests to be made at Lincoln laboratory)***	**Approved Products Lists**	**Manufacturer Certified Tests Required**	**Manufacturer Certification of Compliance Required**	**Location of Additional Information**
SECTION: 20 – Bridge Materials (continued)					
21) Pressure Relief Joint Filler, Preformed Flexible Polyurethane	No	Yes	No	No	- - -
22) Waterstop	Yes – One sample six inches in length unless shipped from tested and approved stock.	No	No	No	- - -
23) Wood Piling	No – Unless requested by the Materials and Research Division.	No	See Note	See Note	Section 27 Note 25
24) Wood Preservatives	Yes – One quart sample from each lot or batch	No	No	No	- - -
25) Zinc (Sheet)	Yes – Approximately 30-40 square inches from each lot or batch.	No	No	No	- - -
26) Reinforcement Bars					
A) Bars (Including Dowel Bars)	Yes – Two samples six feet long from every bar designation and heat number unless shipped from tested and approved stock.	No	Yes	No	Section 27 Note 9
B) Mechanical Splices	Yes – Two six foot samples of each size of reinforcing bar with coupler/splice in the middle	No	Yes	Yes	- - -
27) Steel A) Piling, Sheet Piling, Shells for Cast In Place Piling and Crossbracing for Piling	No	No	Yes	No	Section 27 Note 14
B) Structural					
a) Substructure	No	No	No	Yes	Section 27 Note 15
b) Superstructure	No	No	Yes	No	Section 27 Note 15
28) Precast and Prestressed Concrete Units	No	No	No	No	Section 27 Note 13
29) Prestressed Steel Wire Strand	Yes – One sample 12 feet long from each reel unless sampled at the manufacturer's plant by the testing agency of another state.	No	No	No	- - -
30) Prestressed Fine and Coarse Aggregate	Yes – One sample every 500 cubic yards of concrete.	No	No	No	- - -

Item or Group	Minimum Material Certificate, Test and Inspection Requirements				
	Sample Required ***(Tests to be made at Lincoln laboratory)***	**Approved Products Lists**	**Manufacturer Certified Tests Required**	**Manufacturer Certification of Compliance Required**	**Location of Additional Information**
SECTION: 20 – Bridge Materials (continued)					
31) Structural Steel for Concrete Girder Bridges	No – Project Manager will check the structural steel for compliance.	No	No	Yes	- - -
32) Structural Fasteners for Concrete Girder Bridges A) High Tensile (Regular & Weather Resisting Types)	* Yes – 0 to 25 — 3 Bolts, Nuts & Washers 26 to 50 — 4 Bolts, Nuts & Washers 51 to 90 — 5 Bolts, Nuts & Washers 91 to 150 — 6 Bolts, Nuts & Washers 151 to 280 — 7 Bolts, Nuts & Washers 281 to 500 — 9 Bolts, Nuts & Washers 501 to 1,200 — 11 Bolts, Nuts & Washers 1,201 to 3,200 — 13 Bolts, Nuts & Washers 3,201 to 150,000 — 15 Bolts, Nuts & Washers 150,001 and over — 15 Bolts, Nuts & Washers **These samples are for destructive testing and will not be returned.** *Sample frequency is for each lot.	No	No	Yes	Section 27 Note 12
B) Low Carbon (common)	No	No	No	Yes	Section 27 Note 12

Materials Sampling Guide

Table of Contents

Section 21

Lighting and Signal Materials

1) Bolts, Nuts and Washers……..Page 21-1
A) Anchor Bolts for Light, Signal, Span Wire and Combination Poles…… Page 21-1
B) Anchor Bolts for High Mast Towers and Overhead Sign Supports..... Page 21-1
2) Electrical Items…….. Page 21-1
A) Cast Iron Frames & Covers for Pull Boxes…… Page 21-1
B) Cast Iron Junction Boxes……..Page 21-1
C) Conduit……Page 21-1
a) Aluminum…… Page 21-1
b) Asbestos Cement……..Page 21-1
c) Fiber……Page 21-1
d) Plastic……..Page 21-1
e) Steel (Rigid, Flexible)……Page 21-1
f) Rigid Nonmetallic……Page 21-1
D) Light Poles……... Page 21-1
a) Conventional Light Poles…… Page 21-1
b) High Mast Pole…….. Page 21-1
c) Signal Standards……Page 21-1
d) Span Wire Pole……..Page 21-1
e) Breakaway Base……Page 21-1
E) Ground Rod…… Page 21-2
F) Ground Wire……Page 21-2
G) Electrical Wire and Cable……..Page 21-2
H) Span Wire, Tie Wire and Guy Wire…… Page 21-2

Materials Sampling Guide

Table of Contents

Section 21

Lighting and Signal Materials (continued)

I) Electrical Equipment…….. Page 21-2
a) Photo-Electric Cells……Page 21-2
b) Traffic Signals and Controllers……..Page 21-2
c) Transformers…….. Page 21-2
d) Vehicle Detectors…… Page 21-2
e) Luminaires…… Page 21-2
f) Circuit Breakers…… Page 21-2
g) Fittings and Hardware…… Page 21-2
h) Pull Boxes……Page 21-2
J) Galvanized Steel Wire…….. Page 21-2
K) Grouting Material…….. Page 21-2
a) Non-Shrink Grout…… Page 21-2
b) Epoxy Type…….. Page 21-2
L) Preformed Joint Filler……Page 21-2
M) Poles (wood)…… Page 21-2
N) Polyurethane Foamed Footings…… Page 21-3

Item or Group	Minimum Material Certificate, Test and Inspection Requirements				
	Sample Required ***(Tests to be made at Lincoln laboratory)***	**Approved Products Lists**	**Manufacturer Certified Tests Required**	**Manufacturer Certification of Compliance Required**	**Location of Additional Information**
SECTION: 21 – Lighting and Signal Materials					
1)Bolts, Nuts & Washers					
A) Anchor Bolts for Light, Signal, Span Wire and Combination Poles	No	No	No	Yes	Section 27 Note 12 Note 16 Note 19
B) Anchor Bolts for High Mast Towers and Overhead Sign Supports	Yes – The contractor shall furnish an extra bolt sample (including nuts and washers) from each heat of steel used on the project (or multiple projects) to the Materials and Research Division for destructive testing (See Standard Specifications, Supplemental Specifications, and/or the Project Provisions for further information)	No	Yes	Yes	- - -
2) Electrical Items					
A) Cast Iron Frames & Covers for Pull Boxes	No	No	No	Yes	Section 27 Note 17 Note 18 Note 19
B) Cast Iron Junction Boxes	No – Project Manager shall measure and determine quantity of galvanizing, if galvanized, and report to the Materials and Research Division.	No	No	Yes	Section 27 Note 17
C) Conduit a) Aluminum b) Asbestos Cement c) Fiber d) Plastic e) Steel(Rigid, Flexible) f) Rigid Nonmetallic	Yes – One sample two feet long of each size from each lot or batch, unless U.L. approved. If U.L. label is attached and physical dimensions are correct, the conduit may be accepted. The Project Manager shall report the results of the field inspection in SiteManager.	No	No	No	Section 27 Note 17

Item or Group	Minimum Material Certificate, Test and Inspection Requirements				
	Sample Required ***(Tests to be made at Lincoln laboratory)***	**Approved Products Lists**	**Manufacturer Certified Tests Required**	**Manufacturer Certification of Compliance Required**	**Location of Additional Information**
SECTION: 21 – Lighting and Signal Materials (continued)					
D) Light Poles					
a) Conventional Light Pole	No	No	No	Yes	Section 27 Note 16 Note 17 Note 19
b) High Mast Pole	No	No	No	Yes	Section 27 Note 16 Note 17 Note 19
c) Signal Standards	No	No	No	Yes	Section 27 Note 16 Note 17 Note 19
d) Span Wire Pole	No	No	No	Yes	Section 27 Note 16 Note 17 Note 19
e) Breakaway Base	No	No	No	Yes	Section 27 Note 16 Note 17 Note 19
E) Ground Rod	No – Project Manager to measure diameter and length. Report in writing to the Materials and Research Division.	No	No	No	Section 27 Note 17
F) Ground Wire	Yes – One sample one foot long from each lot	No	No	No	- - -
G) Electrical Wire & Cable	Yes – One sample four feet long from each lot. If requested by the Materials and Research Division a manufacturer's certified test report may also be required.	No	Yes	No	Section 27 Note 17
H) Span Wire, Tie Wire & Guy Wire	Yes – One sample six feet long from each lot	No	No	No	- - -

Item or Group	Minimum Material Certificate, Test and Inspection Requirements				
	Sample Required ***(Tests to be made at Lincoln laboratory)***	**Approved Products Lists**	**Manufacturer Certified Tests Required**	**Manufacturer Certification of Compliance Required**	**Location of Additional Information**
SECTION: 21 – Lighting and Signal Materials (continued)					
I) Electrical Equipment	See Standard Specifications, Supplemental Specifications and/or the Project Special Provisions.				
a) Photo-Electric Cells					Section 27 Note 17
b) Traffic Signals & Controllers	+				Section 27 Note 17
c) Transformers					Section 27 Note 17
d) Vehicle Detectors					Section 27 Note 17
e) Luminaires					Section 27 Note 17 Note 20
f) Circuit Breakers					Section 27 Note 17
g) Fittings & Hardware					Section 27 Note 17
h) Pull Boxes					Section 27 Note 17
J)Galvanized Steel Wire	Yes – One sample six feet long from each lot of 5,000 feet or less and two samples from lots of 5,000 to 30,000 feet.	No	No	No	Section 27 Note 1
K) Grouting Material					
a) Non-shrink grout	No	Yes	No	No	- - -
b) Epoxy type	No	Yes	No	No	- - -
L) Preformed Joint Filler	No	Yes	No	No	- - -
M) Poles (wood)	No – Unless requested by the Materials and Research Division.	No	See Note	See Note	Section 27 Note 25
N) Polyurethane Foamed Footings	Yes – The manufacturer's recommended quantity of each component to provide one quart when mixed, unless shipped from tested and approved stock, or specified brands are being used.	No	No	Yes	Section 27 Note 19

Materials Sampling Guide

Table of Contents

Section 22

Signing Materials

1. Bolts, Nuts and Washers…….. Page 22-1
   A) High Tensile…….. Page 22-1
   B) Low Carbon (common)……. Page 22-1
   C) Sign Fasteners…….. Page 22-1
   D) Anchor……. Page 22-1
2. Brackets and Fasteners……. Page 22-1
   A) Aluminum……. Page 22-1
   B) Steel……. Page 22-1
3. Detachable Letters, Numerals, Symbols and Border……... Page 22-1
4. Acrylic Plastic Prismatic Reflectors…….. Page 22-1
5. Reflective Sheeting……. Page 22-1
6. Extrusheet……... Page 22-2
7. Sheet Aluminum…….. Page 22-2
8. Sheet Metal Sleeves…….. Page 22-2
9. Signing Supports and Structures…….. Page 22-2
   A) Aluminum……. Page 22-2
   B) Steel……. Page 22-2
   C) Wood Posts……. Page 22-2
10. Sign Supports, Overhead……... Page 22-2
   A) Main Members……. Page 22-2
    a) Truss Chords and Bracing…….. Page 22-2
    b) Chord End Flanges…….. Page 22-2
    c) Vertical Posts and Bracing…….. Page 22-2
    d) Catwalk Supports and Post Bases……. Page 22-2

Materials Sampling Guide

Table of Contents

Section 22

Signing Materials (continued)

10. Sign Supports, Overhead (continued)……..Page 22-2
B) Secondary Members…… Page 22-2
a) Catwalk Grating…… Page 22-2
b) Railing…… Page 22-2
c) Bolts……Page 22-2
d) U-Bolts……...Page 22-2
e) J-Bolts…… Page 22-2
f) Chains……Page 22-2
g) Miscellaneous Hardware…… Page 22-2

Item or Group	Minimum Material Certificate, Test and Inspection Requirements				
	Sample Required ***(Tests to be made at Lincoln laboratory)***	**Approved Products Lists**	**Manufacturer Certified Tests Required**	**Manufacturer Certification of Compliance Required**	**Location of Additional Information**
SECTION: 22 – Signing Materials					
1) Bolts, Nuts & Washers					
A) High Tensile	Unless shipped from tested and approved stock, the contractor has the option to either provide certified mill test reports on material used, or submit one sample bolt of each size to the Lincoln Lab for destructive testing. The sample must be taken by the project manager and must be accompanied by a manufacturer's certificate of compliance. Materials shall not be approved for incorporation into the work until certified mill tests or sample test results and certificate of compliance are in hand.	No	Yes	- - -	Section 27 Note 12
B) Low Carbon (common)	No – Project Manager to measure length and diameter. Galvanizing to be checked in the field by use of magnetic instrument for both bolts and nuts. Report results to Materials and Research Division.	No	No	Yes	Section 27 Note 12
C) Sign Fasteners	Yes – Five bolts, nuts and washers from each lot of 500 fasteners unless shipped from tested and approved stock.	No	No	No	Section 27 Note 12
D) Anchor	Yes – A bolt sample (including nuts and washers) from each heat of steel used on the project (or multiple projects) shall be submitted to the Materials and Research Division for destructive testing.	No	Yes	No	- - -
2) Brackets & Fasteners					
A) Aluminum	No	No	No	Yes	Section 27 Note 21
B) Steel	No – Galvanizing thickness to be checked in the field by the Project Manager and a report of results submitted to the Materials and Research Division.	No	No	Yes	Section 27 Note 21
3) Detachable Letters, Numerals, Symbols and Borders	No	No	No	Yes	Section 27 Note 21
4) Acrylic Plastic Prismatic Reflectors	No	No	No	Yes	Section 27 Note 21
5) Reflective Sheeting	No	No	No	Yes	Section 27 Note 21

Item or Group	Minimum Material Certificate, Test and Inspection Requirements				
	Sample Required ***(Tests to be made at Lincoln laboratory)***	**Approved Products Lists**	**Manufacturer Certified Tests Required**	**Manufacturer Certification of Compliance Required**	**Location of Additional Information**
SECTION: 22 – Signing Materials (continued)					
6) Extrusheet	No	No	No	Yes	Section 27 Note 21
7) Sheet Aluminum	No	No	Yes	No	Section 27 Note 21
8) Sheet Metal Sleeves	No	No	No	Yes	Section 27 Note 21
9) Signing Supports and Structures					
A) Aluminum	No	No	Yes	No	Section 27 Note 21
B) Steel	No – Galvanizing thickness to be checked in the field by the Project Manager and a report of results submitted to the Materials and Research Division.	No	Yes	No	Section 27 Note 21
C) Wood Posts	No – Unless requested by the Materials and Research Division.	No	See Note	See Note	Section 27 Note 25
10) Sign Supports, Overhead	- - -	- - -	- - -	- - -	- - -
A) Main Members	- - -	- - -	- - -	- - -	- - -
a) Truss Chords and Bracing	No	No	Yes	No	- - -
b) Chord End Flanges	No	No	Yes	No	- - -
c) Vertical Posts & Bracing	No	No	Yes	No	Section 27 Note 21
d) Catwalk Supports and Post Bases	No	No	Yes	No	Section 27 Note 21
B) Secondary Members	- - -	- - -	- - -	- - -	- - -
a) Catwalk Grating	No	No	No	Yes	- - -
b) Railing	No	No	No	Yes	- - -
c) Bolts	No	No	No	Yes	- - -
d) U-Bolts	No	No	No	Yes	- - -
e) J-Bolts	No	No	No	Yes	- - -
f) Chains	No	No	No	Yes	- - -
g) Misc. Hardware	No	No	No	Yes	- - -

Materials Sampling Guide

Table of Contents

Section 23

Traffic Control

1. Barricades and Warning Signs Reflective Materials……...Page 23-1
2. Barricade Warning Lights…… Page 23-1
3. Thermoplastic Pavement Marking…… Page 23-1
4. Glass Beads for Thermoplastic Pavement Marking…… Page 23-1
5. Epoxy Pavement Marking……... Page 23-1
6. Glass Beads for Epoxy Pavement Marking……..Page 23-1
7. Durable Retroreflective Preformed Pavement Marking Tape (Type I,II,III,IV)…… Page 23-1
8. Temporary Pavement Marking Tape (Type I,II)…….. Page 23-1
9. Paint for Temporary Pavement Marking……...Page 23-1
10. Glass Beads for Temporary Pavement Marking…… Page 23-1
11. Raised Pavement Markers (Plowable, Temporary)…….. Page 23-1
12. Overlay Markers…… Page 23-1
13. Tubular Posts……...Page 23-1
14. Opposing Lane Dividers…… Page 23-2
15. Changeable Message Sign…… Page 23-2
16. Flashing Arrow Panel……..Page 23-2

Item or Group	Minimum Material Certificate, Test and Inspection Requirements				
	Sample Required ***(Tests to be made at Lincoln laboratory)***	**Approved Products Lists**	**Manufacturer Certified Tests Required**	**Manufacturer Certification of Compliance Required**	**Location of Additional Information**
SECTION: 23 – Traffic Control					
1) Barricade Signs and Warning Signs Reflective Materials	Report the reflectometer test results in SiteManager. If the results are unavailable, submit a sample of the reflective sheeting to the Lincoln Laboratory.	No	No	No	- - -
2) Barricade Warning Lights	No	Yes	No	No	- - -
3) Thermoplastic Pavement Marking	No	No	Yes	Yes	- - -
4) Glass Beads for Thermoplastic Pavement Marking	No	No	Yes	Yes	- - -
5) Epoxy Pavement Marking	No	No	Yes	Yes	- - -
6) Glass Beads for Epoxy Pavement Marking	No	No	Yes	Yes	- - -
7) Durable Retroreflective Preformed Pavement Marking Tape (Type I, II, III, IV)	No	Yes	No	No	- - -
8) Temporary Pavement Marking Tape (Type I, II)	No	Yes	No	No	- - -
9) Paint for Temporary Pavement Marking	No	Yes	No	No	- - -
10) Glass Beads for Temporary Pavement Marking	No	Yes	No	No	- - -
11) Raised Pavement Markers (Plowable and Temporary Type)	No	Yes	No	No	- - -
12) Overlay Markers	No	Yes	No	No	- - -
13) Tubular Posts	No	Yes	No	No	- - -

Item or Group	Minimum Material Certificate, Test and Inspection Requirements				
	Sample Required ***(Tests to be made at Lincoln laboratory)***	**Approved Products Lists**	**Manufacturer Certified Tests Required**	**Manufacturer Certification of Compliance Required**	**Location of Additional Information**
SECTION: 23 – Traffic Control (continued)					
14) Opposing Lane Dividers	No	Yes	No	No	- - -
15) Changeable Message Sign	No	Yes	No	No	- - -
16) Flashing Arrow Panel	No	Yes	No	No	- - -

Materials Sampling Guide

Table of Contents

Section 24

Roadside Development and Erosion Control

1. Erosion Control Fabrics…….. Page 24-1
2. Rock Riprap…….. Page 24-1
A) Rock Riprap…… Page 24-1
B) Filter Fabric for Rock Riprap…… Page 24-1
3. Filter Fabric for Pipe Underdrains…….. Page 24-1
4. Subsurface Drainage Matting…… Page 24-1
5. Geocell Cellular Confinement System……Page 24-1
6. Gabions……...Page 24-1
A) Gabion Baskets……...Page 24-1
B) Gabion Stone Fill…… Page 24-1
7. Revet Mattress……...Page 24-1
A) Revet Mattress…… Page 24-1
B) Revet Mattress Stone Fill……... Page 24-1

Item or Group	Minimum Material Certificate, Test and Inspection Requirements				
	Sample Required ***(Tests to be made at Lincoln laboratory)***	**Approved Products Lists**	**Manufacturer Certified Tests Required**	**Manufacturer Certification of Compliance Required**	**Location of Additional Information**
SECTION: 24 – Roadside Development and Erosion Control					
1) Erosion Control Fabrics	No	Yes	No	No	
2) Rock Riprap					
A) Rock Riprap	Yes – One 60 lb. sample for each 2000 tons or fraction thereof. (Sample to be used for quality tests) If material is from an approved source no sample required.	Yes	No	No	Section 27 Note 1 Note 26
B) Filter Fabric for Rock Riprap	No	Yes	No	No	- - -
3) Filter Fabric for Pipe Underdrains	No	Yes	No	No	- - -
4) Subsurface Drainage Matting	No	Yes	No	No	- - -
5) Geocell Cellular Confinement System	No	Yes	No	No	- - -
6) Gabions					
A) Gabion Baskets	No	Yes	No	No	- - -
B) Gabion Stone Fill	Yes – Unless gabion stone is shipped from an approved source.	No	No	No	Section 27 Note 26
7) Revet Mattress					
A) Revet Mattress	No	Yes	No	No	- - -
B) Revet Mattress Stone Fill	Yes – Unless revet mattress stone is shipped from an approved source.	No	No	No	Section 27 Note 26

Materials Sampling Guide

Table of Contents

Section 25

Miscellaneous Materials

1. Automatic Flood Control Gates……Page 25-1
2. Bar Grates…….. Page 25-1
3. Bricks……...Page 25-1
4. Concrete Filler Block…… Page 25-1
5. Dampproofing…….... Page 25-1
A) Asphalt……Page 25-1
B) Asphalt Primer…… Page 25-1
6. Flexible Delineators……...Page 25-1
7. Delineators……...Page 25-1
A) Fasteners……...Page 25-1
B) Reflectors……...Page 25-1
C) Posts……...Page 25-1
8. Glass Fiber Mulch……...Page 25-1
9. Gray Iron Castings (Cast Iron Grates, Frames, Covers, etc)…….... Page 25-1
10. Pipe…… Page 25-1
A) Copper…… Page 25-1
B) Plastic…… Page 25-1
C) Steel…… Page 25-1
D) Wrought Iron…… Page 25-1
E) Ductile Iron Pipe & Fittings……Page 25-2
11. Cold-Drawn Steel Wire……...Page 25-2
12. Prestressed Steel Wire Strand……...Page 25-2
13. Right of Way Markers…… Page 25-2

Materials Sampling Guide

Table of Contents

Section 25

Miscellaneous Materials (continued)

14. Waterstop……. ..... Page 25-2
15. Wood Products……. Page 25-2
A) Lumber…….. Page 25-2
B) Timber…….Page 25-2
16. Hot Pour Sealant……. Page 25-2

17. Fill Material for Inertial Barrier Modules……...Page 25-3
18. Culvert Sandfill……Page 25-3
19. Sand and Sawdust for Absorption Field…….. Page 25-4
20. Sand for Absorption Field…….. Page 25-4
21. Sawdust……. Page 25-4
22. Combined Sand/Sawdust…….. Page 25-5

Item or Group	Minimum Material Certificate, Test and Inspection Requirements				
	Sample Required ***(Tests to be made at Lincoln laboratory)***	**Approved Products Lists**	**Manufacturer Certified Tests Required**	**Manufacturer Certification of Compliance Required**	**Location of Additional Information**
SECTION: 25 – Miscellaneous Materials					
1) Automatic Flood Control Gates	No	No	No	Yes	Section 27 Note 18
2) Bar Grates	No	No	No	Yes	- - -
3) Bricks	No	No	Yes	Yes	Section 27 Note 1
4) Concrete Filler Block	No	No	Yes	Yes	Section 27 Note 1
5) Dampproofing					
A) Asphalt	No	No	No	Yes	- - -
B) Asphalt Primer	No	No	No	Yes	- - -
6) Flexible Delineators	No	Yes	No	No	- - -
7) Delineators					
A) Fasteners	Yes – Five bolts, nuts and washers from each lot of 500 fasteners unless shipped from tested and approved stock.	No	No	No	Section 27 Note 1 Note 12 Note 22
B) Reflectors	Yes – Fifty reflectors from each lot or batch. No sample required if the reflectors are on the approved products list or are shipped from tested and approved stock.	Yes	No	No	Section 27 Note 1 Note 22
C) Posts	Yes – One post of each size from each lot or batch unless shipped from tested and approved stock.	No	No	No	Section 27 Note 1 Note 23
8) Glass Fiber Mulch	No	No	Yes	No	- - -
9) Gray Iron Castings (Cast Iron Grates, Frames, Covers, etc)	No	No	No	Yes	Section 27 Note 18
10) Pipe					
A) Copper	Yes – One 12 inch sample of each size	No	No	No	Section 27 Note 1
B) Plastic	Yes – One 24 inch sample of each size to include marking	No	No	No	Section 27 Note 1
C) Steel	Yes – One 12 inch sample of each size	No	No	No	Section 27 Note 1
D) Wrought Iron	No	No	No	Yes	Section 27 Note 1

Item or Group	Minimum Material Certificate, Test and Inspection Requirements				
	Sample Required ***(Tests to be made at Lincoln laboratory)***	**Approved Products Lists**	**Manufacturer Certified Tests Required**	**Manufacturer Certification of Compliance Required**	**Location of Additional Information**
SECTION: 25 – Miscellaneous Materials (continued)					
10) Pipe (continued)					
E) Ductile Iron Pipe and Fittings	No	No	No	Yes	- - -
11) Cold-Drawn Steel Wire	Yes – One sample four feet long from each ten tons or fraction thereof of each size of wire.	No	No	No	- - -
12) Prestressed Steel Wire Strand	Yes – One sample twelve feet long from each reel unless sampled at the manufacturer's plant by the testing agency of another state.	No	No	No	- - -
13) Right of Way Markers	No- Project Manager shall measure, test and report on DR Form 247 unless shipped from tested and approved stock.	No	No	No	Section 27 Note 24
14) Waterstop	Yes – One sample six inches in length unless shipped from tested and approved stock.	No	No	No	- - -
15) Wood Products					
A) Lumber	No – Unless requested by the Materials and Research Division.	No	See Note	See Note	Section 27 Note 1 Note 25
B) Timber	No – Unless requested by the Materials and Research Division.	No	See Note	See Note	Section 27 Note 1 Note 25
16) Hot Pour Sealant	Yes – One sample per lot unless shipped from tested and approved stock. Additional samples are required if any physical characteristic of the material demonstrates non-compliance with the specifications.	Yes	No	No	- - -

MATERIAL	TYPE OF TEST	Minimum Material Certificate, Sample and Inspection Requirements				
		Q.C. SAMPLING AND TESTING BY CONTRACTOR	VERIFICATION SAMPLING AND TESTING BY NDOR			LOCATION OF ADDITIONAL INFORMATION
Section: 25 – Miscellaneous Materials (continued)			FIELD PERSONNEL	BRANCH LAB	LINCOLN LAB	NOTE No. PAGE No.
17) Fill Material for Inertial Barrier Modules	Gradation	- - - - - - - - - -	One sample for gradation tests each 100 cubic yards or fraction thereof. (The recommended sample size is 25 pounds) Project personnel will supply the 10 pound sample needed to perform the testing shown under the Lincoln Lab column. The sample shall be taken at the project.	- - - - - - - - - -	One 10 pound sample per project for gradation. (Duplicate of sample tested in field)	Section 27 Note 1
18) Culvert Sandfill	Quality & Gradation	- - - - - - - - - -	One sample for gradation tests each 100 cubic yards or fraction thereof. The recommended sample size is 25 pounds. Project personnel will supply the 10 and 60 pound samples needed to perform the testing shown under the Lincoln Lab column. The samples shall be taken at the project.	- - - - - - - - - -	One 60 pound sample for quality tests if so designated on DR FORM 324 “Source of Aggregates to be Used” or when changes in quality or characteristics occur. One 10 pound sample per project for gradation test (Duplicate of sample tested in field)	Section27 Note 1 Note 4

MATERIAL	TYPE OF TEST	Minimum Material Certificate, Sample and Inspection Requirements				
		Q.C. SAMPLING AND TESTING BY CONTRACTOR	VERIFICATION SAMPLING AND TESTING BY NDOR			LOCATION OF ADDITIONAL INFORMATION
Section: 25 – Miscellaneous Materials (continued)			FIELD PERSONNEL	BRANCH LAB	LINCOLN LAB	
19) Sand and Sawdust for Absorption Field	Mix Design & Permeability	- - - - - - - - - -	Project personnel will supply the 60 pound sample of sand and the 20 pound sample of sawdust needed to perform the testing shown under the Lincoln Lab column. The samples shall be taken at the project or mixing site.	- - - - - - - - - -	One 60 pound sample of sand and one 20 pound sample of sawdust pre-construction samples for mix design approval.	- - -
20) Sand for Absorption Field	Gradation	- - - - - - - - - -	A minimum of two gradation tests per project The recommended sample size is 25 pounds. Project personnel will supply the 10 pound sample needed to perform the testing shown under the Lincoln Lab column. The sample shall be taken at the project.	- - - - - - - - -	One 10 pound sample per project for gradation.	- - -
21) Sawdust for Absorption Field	Gradation	- - - - - - - - - -	A minimum of two gradation tests per project. The recommended sample size is 10 pounds. Project personnel will supply the 10 pound sample needed to perform the testing shown under the Lincoln Lab column. The sample shall be taken at the project.	- - - - - - - - - -	One 10 pound sample per project for gradation.	- - -

MATERIAL	TYPE OF TEST	Minimum Material Certificate, Sample and Inspection Requirements				
		Q.C. SAMPLING AND TESTING BY CONTRACTOR	VERIFICATION SAMPLING AND TESTING BY NDOR			LOCATION OF ADDITIONAL INFORMATION
Section: 25 – Miscellaneous Materials (continued)			FIELD PERSONNEL	BRANCH LAB	LINCOLN LAB	
22) Combined Sand/ Sawdust for Absorption Field	Permeability	- - - - - - - - - -	Project personnel will supply the 60 pound sample needed to perform the testing shown under the Lincoln Lab column. The sample shall be taken at the project.	- - - - - - - - - -	One 60 pound construction sample for permeability test.	- - -

Materials Sampling Guide

Table of Contents

Section 26

Building Materials

1. Building Inspection and Acceptance…….. Page 26-1

Section 26

Building Materials

Inspection of buildings involves checking many items that are not normally encountered in the inspection of highway work. Any questions concerning building inspection should be directed to the Highway Architect of the Roadway Design Division (Rest Area buildings) or to the Architecture Section of the Capital Facilities and Transportation Services Division (all other buildings).

Upon project completion the Project Manager shall advise the Materials and Research Division, in writing, that all materials or items used were approved for use on the basis of tests, field inspection, or that approval was given by the Highway Architect or Architecture Section for use.

A copy of this letter should be sent to the Highway Architect or Architecture Section.

Materials Sampling Guide

Table of Contents

Section 27

Notes

		Page
Note 1.	Sampling and Testing Small Quantities of Non-Critical Materials	27-1
Note 2.	Asphaltic Oils, Performance Graded Binders and Emulsified Asphalts	27-2
Note 3.	Asphaltic Concrete Small Quantities	27-4
Note 4.	Quality Tests of Aggregates	27-4
Note 5.	Crushed Rock Aggregate Inspected at the Source	27-4
Note 6.	Portland Cement Concrete	27-5
Note 7.	Air Entraining Agents and Concrete Admixtures	27-5
Note 8.	Liquid Curing Compounds	27-6
Note 9.	Reinforcing Steel, Bars and Fabric	27-6
Note 10.	Beam and Cable Guard Rail and Fittings	27-6
Note 11.	Metal Culvert Pipe Field Inspection and Reporting	27-7
Note 12.	Bolts, Nuts and Washers and Structural Fasteners	27-7
Note 13.	Precast and Prestressed Concrete Units (Bearing Piling, Sheet Piling, Girders, etc.)	27-7
Note 14.	Steel Bearing Piling, Steel Sheet Piling and Steel Shells for Cast-In-Place Piling	27-8
Note 15.	Structural Steel for Superstructure, Substructure and Handrail	27-8
Note 16.	Combination Mast Arm Signal and Lighting Poles, Mast Arm Signal Poles, Span Wire Poles, Pedestal Traffic Signal Poles and Light Poles	27-8
Note 17.	Electrical Items	27-9
Note 18.	Gray Iron Castings (Cast Iron Grates, Frames, Pull Box Frames and Covers, Junction Boxes, etc)	27-9
Note 19.	Source of Certificate of Compliance	27-9
Note 20.	Luminaire Settings	27-9
Note 21.	Signing Items	27-10
Note 22.	Reflectors and Fasteners	27-10
Note 23.	Delineator Posts	27-10
Note 24.	Right Of Way Markers	27-10
Note 25.	Treated and Untreated Timber Piling, Treated Timber Sheet Piling, Fence Posts, Treated and Untreated Lumber, Treated and Untreated Timber, Wood Guard Rail Posts, Offset Blocks, Treated Poles and Sign Posts	27-11
Note 26.	Rock Riprap and Gabion Stone Fill	27-11

Note 1
Sampling and Testing Small Quantities of Noncritical Materials

Certain exceptions to the normal sampling and testing procedures may be made where quantities of noncritical items or materials are too small to justify the cost of testing or inspection. These exceptions in sampling and testing are intended for small quantities of materials whose positions on the project are not structurally critical. Such procedures are not to be permitted in materials for major structures, permanent mainline or ramp pavements, or other structurally critical items where use of unsound materials might significantly influence the performance, strength or durability of that item, or the public safety.

By submitting a DR Form 181 "LETTER OF CERTIFICATION BY PROJECT MANAGER" to the Materials and Research Division, the Project Manager may waive their respective sampling and testing requirements where quantities of noncritical items or materials are too small to justify the cost of testing or inspection. When this method is used, records must be documented as provided in Paragraph 1(a) and/or (b) and Paragraph 2 of Dr Form 181.

The following tabulation indicates the approximate maximum quantities of material, excepting Portland cement concrete and asphaltic concrete that may be accepted under the methods indicated above:

a. Aggregates (except those for Portland cement concrete and asphaltic concrete) – Not to exceed approximately 150 cubic yard per day nor more than approximately 500 cubic yard per project. Rock riprap and Gabion stone fill shall not exceed 1000 tons per project.

b. Bituminous Mixtures (cold mix) – Not to exceed approximately 50 tons per day nor more than approximately 250 tons per project.

c. Asphaltic Oils and Emulsified Asphalts – Not to exceed approximately 1500 gallons of each type per project.

d. Paint – Not to exceed approximately five gallons of each type per project. Brand name paints of the color specified and the weights and analysis on the container label should be the basis for acceptance.

e. Dimensional Lumber – (2x4, 1x6, etc) Recognized commercial grades only may be used.

f. Masonry Items – Not to exceed approximately 100 pieces of each item. Acceptance should be based on physical measurements for nominal size and visual inspection. Masonry items may include but are not exclusive to bricks, concrete blocks, etc.

Portland cement concrete for the items and approximate quantities listed below may be accepted by entering a sample in SiteManager and selecting the "Small Quantities of Non-Critical Materials" Test Method:

a. Sidewalks –not to exceed 200 cubic yards per day

b. Median Surfacing – not to exceed 200 cubic yards per day

c. Concrete Base Course – not to exceed 200 cubic yards per day

d. Concrete Base Course Widening – not to exceed 200 cubic yards per day

e. Curb and Gutter – not to exceed approximately 500 lineal feet per project, or 50 cubic yards per day, for more than two consecutive days

f. Slope paving and headers – not to exceed 50 cubic yards

g. Paved ditch (intermittent water flow)

h. Single culvert headwalls and collars

i. Catch basins, manhole bases and inlets

j. Concrete ditch checks

k. Post hole concrete (fence and guardrail)

l. Miscellaneous Concrete – Concrete placements of five cubic yards or less and which are non-critical. Non-critical refers to placements that will not be subject to traffic loading and for which failure is not likely to disrupt traffic or pose a threat of harm to the traveling public.

Acceptance under this system shall be based on the following:

a. Delivery tickets shall accompany each load

b. The concrete plant must comply with the specifications

c. Only state tested and approved aggregates, cements and admixtures may be used.

d. Project personnel will perform necessary testing on any material they feel may be of inferior quality

e. The Project Manager will determine that the concrete for these items is from a known reliable source and fulfills the requirements for the purpose intended.

The above system is intended to provide a method whereby the Project Manager may be relieved of sampling and testing small quantities of material which in his judgement are placed in such a location within the project that the absence of sampling and testing does not materially affect the principle of sound engineering control. This program includes, but is not exclusive to, the items in the list above. Many other miscellaneous minor items (e.g., 3 or 4 posts, a few bolts, washers, nuts, a few pieces of pipe, short pieces of wire, a few pieces of reinforcing steel, a few feet of fencing material, etc) will be within the definition of the above but cannot all be listed inasmuch as location on the project will determine the need to sample and test.

A word of caution: this system should not be used as a means of reducing sampling and testing of materials by adjusting daily delivery of quantities, nor to allow the contractor to provide non-specifications materials. It is intended that all materials shall comply with specification requirements but that this compliance is determined by experience and judgement and that the Project manager shall retain absolute control over the determination of items to be accepted without the usual engineering controls.

Note 2
Asphaltic Oils, Performance Graded Binders, and Emulsified Asphalt

Acceptance Procedures:

General – The Project Manager must send his address to each supplier which is expected to ship asphaltic material to projects under his supervision.

Since payment for the asphalt materials is based on the number of net gallons shown on the supplier's certificate of compliance, it is important that the Project Manager check each truck to make sure that it has been completely emptied.

The suppliers who may furnish asphaltic material to the state have been instructed to furnish a copy of their certificate of compliance to the Project Manager for each truck shipped to his project.

The certificate of compliance is to be sent with the truck driver for delivery to the Project Manager. The certificate of compliance must meet the requirements of the Special Provisions as stated in the contract.

A certificate of compliance is required and must certify:

a) the specific gravity of the material

b) mixing and compaction temperatures for Performance Graded Binders

c) any special handling/storage requirements

d) net gallons at 60° F of the shipment

e) that the material meets the specification requirements for that grade

f) Certificates of compliance must be signed by an authorized employee of the supplier.

Asphaltic materials may be used immediately on the basis of the supplier's certificate of compliance.

Samples shall be taken in accordance with AASHTO T 40, Section 10, as applicable.

The contractor's certified sampling technician, under the supervision and direction of Nebraska Department of Roads personnel, will sample bituminous materials.

The contractor's certified sampling technician will fill out the Certified Sample Registration form whenever a sample is taken. The Certified Sample Registration form will be located at the plant site. Contact the Materials & Research Division at (402) 479-4774 if the form is not available.

Asphaltic oil and emulsified asphalt shall have a representative sample taken from each truck as soon as possible after a shipment is received.

No penalties on Emulsified Asphalt can be assessed if more than 14 days have elapsed between sampling and completion of testing.

Performance Graded Binders shall be sampled from the line between the storage tank and the mixer. Samples are not required for individual truckloads.

Note 3
Asphaltic Concrete Small Quantities

The testing requirements of asphaltic concrete identified in the contract for quantities of less than one lot (3750 tons) may be modified by the District Construction Engineer.

When testing requirements are modified, the method of acceptance, with agreement of the Contractor, will be established by the Engineer.

Note 4
Quality Tests of Aggregates

In order to reduce the duplication of quality tests of aggregates from the same source by the Lincoln Laboratory, it is requested that DR Form 324, "Source of Aggregates to be Used", (required for quality tests), be completed by the Project Manager for each project or purchase order. After recording the necessary information, this form should be forwarded to the Materials and Research Division prior to actual production of any aggregate.

After review by the Materials and Research Division, this form will be returned indicating if it will be necessary to submit a 60 pound sample to the Lincoln Laboratory for quality tests or if the quality tests will be waived.

Quality test results obtained by the Lincoln Laboratory for aggregates from the various sources throughout the state will be kept on file in the Lincoln Laboratory.

Note 5
Crushed Rock Aggregate Inspected at the Source

Crushed rock aggregates from eastern Nebraska which are inspected at the source by Department personnel or by the producers' Certified Inspector are governed as follows:

The scale weigh ticket accompanying truck shipments will show information pertinent to the material and will also certify that the material was from stock tested by approved methods. The State Inspector will forward to the Project Manager DR Form 156, "Aggregate Shipments". These forms will furnish record of shipment, and other pertinent information. When received on the project, the same procedure as outlined previously regarding the use of the aggregate should be observed.

Should any type or class of crushed rock be received without a Certification of Inspection tag, the Materials and Research Division should be contacted for verification of whether or not the material is acceptable for use.

Note 6
Portland Cement Concrete

The minimum frequency for determining the yield and air content of plastic concrete and the gradation of the aggregates used is based on an average daily production facility. It is difficult, however, to apply this rate of testing to all phases of concrete construction. In some instances, for adequate control, it may be necessary to perform the required tests more often than the minimum frequency specified. In any case, the frequency of control tests should be based in part upon the rate of concrete production and in part upon maintaining proper mix control.

Concrete Cylinders for Pavement – A set of four cylinders will be made for each day's placement.

Mandatory testing is required at 7 and 28 days. Unless other ways required cylinders shall be tested at 7, 10, 14 and 28 days.

Concrete Cylinders for Structures – A set of three cylinders will be made for the first 100 cubic yards placed. An additional set of three cylinders are required for placements in excess 100 cubic yards. Mandatory testing is required at 7 and 28 days.

Note 7
Air-Entraining Agents and Concrete Admixtures

Concrete admixtures are on the Approved Products List. This list can be viewed on the Materials and Research website.

The use of air entraining agent and admixture (s) are to be recorded on the PCC Sample Proportioning Report template.

If an admixture or a concrete admixture is of a questionable nature, the ready mix producer must contact the company representative to address the concerns regarding the admixture. The findings of this investigation will be given to the Project Manager who must give his approval before the admixture can be used.

Note 8
Liquid Curing Compound

This material is pretested by the Materials and Research Laboratory with samples coming directly from the manufacturer. Approved lot numbers can be obtained by the Department of Roads' personnel through the Materials and Research website. Curing compound lot numbers not found must be sampled and tested and approved before being used. The Project Manager will notify the Materials and Research Division as to which project the material is to be used on.

Note 9
Reinforcing Steel, Bars and Fabric

Reinforcing steel, supplied by Nebraska jobbers or fabricators, is usually sampled and tested by the Lincoln Laboratory, which maintains a stock record of tested material at these plants. The Materials and Research Division is notified by the fabricator when fabrication has been completed for a shipment to a state project. Department of Roads' inspection tags (Form TL-5401) are then attached to the shipment by an inspector from the Materials and Research Division. Inspection tags will usually show the project, report number, size, manufacturer and, if possible, the station and type of structure where the steel is to be used. Shipments of reinforcing steel having Department of Roads' inspection tags attached are approved for immediate use.

A "Report of Shipment of Steel for Concrete Reinforcement" is issued by the Materials and Research Division to cover each shipment to a project.

Reinforcing steel is sometimes supplied from sources outside the state. In this case, it may be tested by a testing agency of the state in which it originates and the shipments tagged by that agency. Reports covering the tests for these shipments are sent to the Materials and Research Division from which copies will be distributed. The material should not be used until the results shown on the test reports are received. Some agencies tag all material with an identification number tag before the material is tested. This identification tag does not indicate the acceptability of the material; therefore, the test report must be checked for the results.

Reinforcing steel may occasionally be furnished directly to the project from a jobber without being previously tested. In this case, samples and certificates should be submitted to the Lincoln Laboratory as prescribed by the "Materials Sampling Guide". Reinforcing steel furnished under these circumstances should not be used until tests are completed and approved.

Note 10
Beam and Cable Guard Rail and Fittings

Beam and Cable guardrail and associated hardware furnished by each supplier is tested once each year to check their respective stock of material. Any material shipped from the tested stock of these suppliers to State Projects will not require any additional sampling, testing, or certification. Shipping reports showing the material shipped will be distributed by the Materials and Research Division to the Project Manager and others concerned.

When the supplier's tested stock is exhausted, he may continue to ship additional material to State Projects, however, this material must be covered by the type of certification shown in this sampling guide for the particular item involved. The certifications and supplier's shipping report will be sent to Materials and Research Division for approval and distribution to the Project Manager and others concerned.

Occasionally, guardrail material may be sampled on the project for a supplier's stock. In this case, the Project Manager will be notified by the Materials and Research Division concerning the samples required.

When steel posts (end posts, special posts, mounting brackets, etc.) used with beam guard rail are shipped to a project on the basis of certificates of compliance, they will be field checked by the Project Manager for correct dimensions and for the amount of zinc coating or paint thickness. A report showing the number of posts, the measurements, and coating thickness will be sent to the Materials and Research Division for distribution.

Note 11
Metal Culvert Pipe Field Inspection and Reporting

The random sampling procedure at the pipe fabricators plant requires the supplier to send a copy of his shipping report with the truck delivering the materials. The report will be addressed to "Project Manager". If the Project Manager or his inspector is not present when the material is unloaded, the report will be left with the contractor, if he is present, for transmittal to the Project manager. Should the material be stockpiled at a site where neither the contractor nor his inspector is present, the truck driver will return the report to his office and it will be mailed to the Project Manager.

The shipping report may be either a Form MT-750 or a fabricator's bill of lading and will show the following information for the culvert pipe in the shipment: Quantity (lineal feet), size, heat number, thickness of sheets for each size of pipe, brand, and the fabricator's certification of compliance.

The pipe may be approved for use as soon as the Project Manager verifies that the material received is as described on the shipping report and that the pipe has not been damaged in shipment or handling. Any corrections or notes should be made on the Project Manager's copy of the shipping report that should then be sent to the Materials and Research Division. A copy of the project report covering the shipment will be sent to the Project Manager by the Materials and Research Division.

Refer to the Approved Products List, Section 6 – Miscellaneous, for additional corrugated metal pipe information.

Note 12

Bolts, Nuts and Washers, and Structural Fasteners

Tested and approved stock will be tagged with a Department of Roads' white inspection tag (TL-5401) inside or outside of the container. Shipments so tagged may be used immediately. Shipment reports referencing to the stock test will be issued by Materials and Research.

Note 13
Precast and Prestressed Concrete Units
(Bearing Piling, Sheet Piling, Girders, Etc.)

Precast and prestressed concrete units are usually produced by commercial plants within the state. Inspection of these units is generally provided by Department of Roads' personnel.

When shipment from the fabricating plant is made to a project, a shipping report (Form DR 214, Report of Shipment of Precast and Prestressed Concrete Units from Tested Stock) is completed by the inspector with copies to the Materials and Research Division, Division Engineer, and the Project Manager. A preliminary copy shall accompany the units with the driver of the hauling vehicle.

The shipping report gives the inspector's coding of each unit shipped and is verification of acceptability provided the units shipped show no evidence of damage incurred through handling enroute to the project.

No unit received on the project shall be used in the work until the Project Manager has checked the inspector's identification as shown on the shipping report with that shown on the units.

Note 14
Steel Bearing Piling, Steel Sheet Piling and Steel Shells for Cast-in-Place Piling

These items are accepted at the time of manufacture. The contractor shall be required to supply the Project Manager with the certified test reports when the material is delivered to the project. The Project Manager shall check the heat numbers shown on these reports with those on the piling. He shall forward the mill test reports to the Materials and Research Division where the chemical analysis will be checked and approved and copies distributed. The Project Manager shall not accept the piling for use until he has received copies of the approved mill test reports from the Materials and Research Division, or approval to use this material.

Note 15
Structural Steel for Superstructure, Substructure, and Handrail

Structural steel is accepted for use on the basis of physical and chemical tests made at the time of manufacture. The Department Inspector at the fabrication plant will obtain from the fabricator the certified mill tests representing the structural shapes being fabricated. He will obtain a certificate of compliance listing all other items, which are considered as miscellaneous and for which mill tests cannot be obtained. These miscellaneous items include tie rods and turnbuckles, bearing devices, nose angles, roadway devices and dam plates, armor angles, floor drains, and all bolts except high strength bolts, etc. He will review all mill tests for compliance with the specifications and approval will be stamped or written and signed by him. The Project Manager shall not accept for use any structural steel shapes until he has received the shop inspection reports and approved mill tests or certificates of compliance from Materials and Research Division, or approval to use this material. All mill test report sheets shall show the project number for which material will be used.

Note 16
Combination Mast Arm Signal and Lighting Poles, Mast Arm Signal Poles, Span Wire Poles, Pedestal Traffic Signal Poles and Light Poles

The Standard Specifications require that the manufacturer of the pole shall supply the anchor bolts, anchor bolt covers, pole bases, and all miscellaneous hardware. The pole manufacturer shall furnish a certificate stating that the poles and anchor bolts shall be capable of supporting the required load under the specified design criteria and shall withstand the specified wind and ice load. Upon request by the Project Manger, the pole manufacturer shall furnish mill tests of any materials used in the manufacturer of the pole and its accessories.

The specific requirement for each of the pole types and accessories is shown in the Standard Specifications.

Note 17
Electrical Items

Electrical items are accepted for use on the basis of sample inspection and testing, receipt of certified test reports, or certificates of compliance. Where required, certified tests or certificates of compliance shall be furnished by the contractor to the Project Manager. The Project Manager shall forward the certified tests and/or certificates of compliance to the Materials and Research Division for review and distribution.

The Project Manager shall not accept or permit the installation of any electrical items until he has received the required tests and/or certification documents indicating approval for use through communication with the Materials and Research Division, Traffic Engineering or concerned authority, pending receipt of the documentation. Special attention shall be given to those items which will not be readily available to inspection during or after completion of the work or where removal and replacement under adverse conditions such as under traffic, etc. would be an inconvenience to the contractor, the state, or the traveling public.

Note 18
Gray Iron Castings (Cast Iron Grates, Frames, Pull Box Frames and Covers, Junction Boxes, etc.)

When these items are furnished from the Lincoln or Omaha area, they will probably be supplied from a tested pour representing stock at the foundry. Shipments to projects from these stocks will be reported to the Materials and Research Division by the foundries. Castings will usually be identified by a letter or symbol representing the foundry, followed by numbers representing the date the casting was poured. The Materials and Research Division will issue a “Report of Shipment of Gray Iron Castings” which will include a list of the items shipped to the project, the quantity, identification and references to the stock tests. This report constitutes approval of the tensile strength of the iron used in these castings. Since the finished castings are not inspected prior to shipment, acceptance should be based on field inspection showing good workmanship and compliance with the dimensional and weigh requirements specified in the contract documents.

Cast Iron materials furnished from other sources may not be supplied from tested stocks. In this case, the Project Manager shall obtain the manufacturer’s certificate of compliance for this material from the contractor prior to installation.

Note 19
Source of Certificate of Compliance

The certificate of compliance must be from the manufacturer, not the supplier.

Note 20
Luminaire Settings

Luminaire sockets have adjustments that provide for a choice of light distribution patterns. The Project Manager shall inspect the settings on each luminaire socket and report this setting to the Lighting Engineer. Adequate descriptive literature is provided with each type of luminaire to determine the setting. The report may be in the form of a letter, sketch, etc.

Note 21
Signing Items

Signing items are accepted for use on the basis of sample inspection, testing and receipt of certified test reports, and certificates of compliance. Sample inspection and testing will be performed by Traffic Engineering and Materials and Research Divisions. Where required, certified tests or certificates of compliance shall be furnished by the contractor to the Project Manager. The Project Manager shall forward the certified tests and certificates of compliance to the Materials and Research Division for approval and distribution.

The Project Manager shall not accept signing items for use until he has received the required tests and/or certification documents indicating approval for use or has verified acceptability of the signing items for use through communication with the Materials and Research Division, the Traffic Engineering Division, or concerning authority, pending receipt of the documentation.

Note 22
Reflectors and Fasteners

When shipment is made from approved stock, inspection tags will be attached to or placed within the container. Units can be used upon delivery to the project on the basis of the inspection tag. The Materials and Research Division will issue an acceptance report upon shipment of the units.

The brand of reflector used must be entered in SiteManager.

Note 23
Delineator Posts

When delineator posts are delivered to a project from a tested and approved stock, the bundles will be tagged with a Department of Roads' white inspection tag (TL-5401). The Project Manager does not need to notify the Materials and Research Division and can use this material upon delivery to the project. A shipment report will be issued by the Materials and Research Division which will refer to the stock test report numbers covering the posts and show the sizes and quantities represented.

Posts delivered to a project which are not supplied from a previously tested and approved stock should not be used until they have been tested and approved by the Materials and Research Division.

Note 24
Right of Way Markers

These units are usually produced by commercial plants within the state. Inspection of these units is generally provided by department personnel.

When shipment from the fabricating plant is made to a project, a shipping report (Report of Shipment of Precast Concrete ROW Markers From Approved Stock) is completed by the inspector with copies to the Materials and Research Division, District Engineer, and Project Manager.

The shipping report gives the lot number and quantity shipped and is verification of acceptability provided the units shipped show no evidence of damage incurred through handling enroute to the project.

Note 25
Treated and Untreated Timber Piling, Treated Timber Sheet Piling, Fence Posts, Treated and Untreated Lumber, Treated and Untreated Timber, Wood Guard Rail Posts, Offset Blocks, Treated Poles and Sign Posts

These materials are normally accepted on the basis of Certificates of Compliance from the producer and treater or Certificates of Inspection and Treatment from a commercial testing laboratory arranged for by the supplier and approved by the Materials and Research Division.

Materials accepted on the basis of Certificates of Compliance from the producer and treater will usually not have any identifying hammer mark on the end.

Materials accepted on the basis of Certificate of Inspection and Treatment from a commercial testing laboratory will have a hammer mark on the end of each piece.

Wood materials may be used upon delivery to the project provided they have not been damaged and the proper identifying hammer mark is on the end of each piece and the report covering the inspection is on hand or the Project Manager has received from the Materials and Research Division the approved Certificates of Compliance for the materials delivered.

If material is delivered to the project prior to receipt of the test reports or Certificate of Compliance, the Project Manager shall notify the Materials and Research Division promptly, giving all pertinent data such as project number, name of Jobber or supplier, the mill or treating plant, car number, hammer mark, number of pieces, and any other information available. Action can then be started to obtain the test report of Certificate of Compliance in the event it has not been received at the laboratory.

Wood items are sometimes tested and placed in stock at jobber's plants. The Materials and Research Division has the test reports supplied by the commercial testing agency or the Certificates of Compliance from the producer and treater for any material which they have inspected and approved for the Department. When the jobber makes a shipment to a State project, he submits a shipment report (Form TL-5162) to the Materials and Research Division showing the project number and other pertinent information. If the material shown on the shipment report is as specified for the project and reports covering the inspection and approval of the material are on file at the Materials and Research Division, the report is signed by Materials and Research and sent to the Project Manager.

Note 26
Rock Riprap and Gabion Stone Fill

The sampling of rock riprap and gabion stone fill is not required if the material is received from any of the following sources:

Concrete Materials Company (Sioux Falls, SD)
Fisher Sand & Gravel (Mitchell, SD)
Ft Calhoun Stone Company (Ft Calhoun, NE)
Rinker Materials (Guernsey, WY)
Hills Materials Company (Hot Springs, SD)
Kerford Limestone (Weeping Water, NE)
L. G. Everst (Del Rapids, SD)
Martin Marietta Aggregates (Weeping Water, NE)

Meridian Aggregates (Granite Canyon, WY)
Spencer Quarry (Spencer, SD)

Since acceptance will be at the source, field inspection will normally be limited to observation for cleanliness and segregation problems. A delivery ticket for each load of rock riprap or gabion stone fill delivered to the project or work site should include the name of the producer, the date, the location of the quarry, the quantity delivered (in tons), the name of the contractor and the project number. The delivery ticket should be given to the Department representative at the time of arrival. At the completion of the project, the Project Manager should advise the Materials and Research Division as to the producer, the location of the quarry, and the date shipped.

If the rock riprap is from a source that is not pre-approved contact the Materials and Research Division's Aggregate laboratory for sample criteria.

NEBRASKA DEPARTMENT OF ROADS

QUALITY ASSURANCE PROGRAM

FOR

CONSTRUCTION

Materials Sampling Guide, Section 28

Page 28-A

June 25, 2009

NEBRASKA DEPARTMENT OF ROADS

QUALITY ASSURANCE PROGRAM FOR CONSTRUCTION

TABLE OF CONTENTS

TABLE OF CONTENTS i

SECTION 1: INTRODUCTION 1-1

SECTION 2: DEFINITION OF TERMS 2-1

SECTION 3: ACCEPTANCE PROGRAM 3-1
- 3.1 General 3-1
- 3.2 Verification Sampling and Testing – Frequency, Location and Attributes 3-1
  - 3.2.1 Project Produced Materials 3-1
  - 3.2.2 Manufactured Materials 3-1
  - 3.2.3 Approved Product List 3-1
- 3.3 Quality Control Sampling and Testing 3-2
  - 3.3.1 Quality Control Plan 3-2
  - 3.3.2 Dispute Resolution System 3-2

SECTION 4: INDEPENDENT ASSURANCE PROGRAM 4-1
- 4.1 General 4-1
  - 4.1.1 System Approach 4-1
  - 4.1.2 Project-Based Approach 4-1
- 4.2 Sampling and Testing Frequency and Location 4-1
- 4.3 Testing Equipment 4-1
- 4.4 Testing Personnel 4-2
- 4.4 Comparison of Test Results 4-2
- 4.5 Annual Report of Independent Assurance Program Results 4-2

SECTION 5: MATERIALS CERTIFICATION 5-1

SECTION 6: CONFLICT OF INTEREST 6-1

SECTION 7: QUALIFICATION OF LABORATORIES, SAMPLING AND TESTING PERSONNEL 7-1
- 7.1 Laboratories 7-1
- 7.2 Sampling and Testing Personnel 7-1

APPENDIX A – Sampling and Testing Personnel Qualification Program A-1

APPENDIX B – Laboratory/Equipment Qualification Program B-1

APPENDIX C – Quality Control Plan – Minimum Requirements C-1

APPENDIX D – Acceptable Tolerance Limits for Independent Assurance D-1

APPENDIX E – Materials Certification E-1

APPENDIX F – FHWA Annual Report F-1

NEBRASKA DEPARTMENT OF ROADS
QUALITY ASSURANCE PROGRAM FOR CONSTRUCTION

1. INTRODUCTION

1.1 This manual describes a "Quality Assurance Program for Construction" established by the Nebraska Department of Roads (NDOR). The intent of this program is to provide adequate assurance that the materials and workmanship incorporated in highway construction projects are in reasonable conformity with the requirements of the plans and specifications including any approved changes.

1.2 The first level of assurance is provided by qualified laboratories and testing personnel. This assures that equipment and personnel are capable of performing the tests properly. An Independent Assurance program provides the second level of assurance. This level assures that testing personnel and equipment remain capable of performing the tests properly. The third level of assurance is provided by verification sampling and testing. This level assures the quality of the product.

1.3 This program has been developed in conformance with the criteria contained in 23 CFR 637 (B). It consists of an Acceptance Program and Independent Assurance Program. The Acceptance Program provides sampling and test results, obtained by qualified testing personnel and laboratories, used in the acceptance decision. The Independent Assurance Program provides for checking the testing personnel and test equipment.

1.4 This Quality Assurance Program allows for the use of validated contractor-performed quality control (QC) test results for the acceptance decision. It also allows for the use of test results obtained by commercial laboratories in the Independent Assurance Program, as well as in acceptance decisions. Contractor and commercial laboratories and their personnel performing Quality Control sampling and testing used in the acceptance decision must be evaluated by the Independent Assurance Program.

1.5 *Applicability* – This "Quality Assurance Program for Construction" is required for all highways on the State Highway System. It does not apply to roadside appurtenances to the State Highway System such as rest areas and weigh stations, except for any driving surfaces or parking areas associated with a roadside appurtenance. The program is desirable, but not required, for construction on local roads and streets. A local jurisdiction may, at their discretion, specify the requirements contained herein for any or all construction projects under their authority.

2. DEFINITIONS

2.1 ***Acceptance Program*** – All factors that comprise NDOR's determination of the quality of the product as specified in the contract requirements. These factors include verification sampling, testing, and inspection, as well as results of quality control sampling and testing.

2.2 ***Engineer*** – A representative duly authorized by the Director, such representative acting within the scope of the particular duties assigned to him/her or the authority given to him/her.

2.3 ***Independent Assurance Program*** – Activities that are an unbiased and independent evaluation of all sampling and testing procedures used in the acceptance program. Test procedures used in the acceptance program which are performed in the Materials and Research Central Laboratory are not covered by the Independent Assurance Program since the central laboratory maintains accreditation through the AASHTO Accreditation Program.

2.4 ***Proficiency Samples*** – Homogeneous samples that are distributed and tested by two or more laboratories. The test results are compared to assure that the laboratories are obtaining the same results.

2.5 ***Qualified Laboratories*** – Laboratories that are capable of performing test procedures as established by the NDOR Laboratory/Equipment Qualification Program (Appendix B). This program includes, as a minimum, provisions for checking test equipment and a requirement that the laboratory maintain records of all calibration checks.

2.6 ***Qualified Sampling and Testing Personnel*** – Personnel who are capable of sampling and testing construction materials as established by the NDOR Sampling and Testing Personnel Qualification Program (Appendix A). This program includes, as a minimum, requirements that personnel demonstrate their ability to perform sampling and testing procedures, as well as, pass a written examination.

2.7 ***Quality Assurance*** – All those planned and systematic actions necessary to provide confidence that a product or service will satisfy given requirements for quality.

2.8 ***Quality Control*** – All contractor/vendor operational techniques and activities that are performed or conducted to fulfill the contract requirements.

2.9 ***Random Sample*** – A sample drawn from a lot in which each increment in the lot has an equal probability of being chosen.

2.10 ***Vendor*** – A supplier of project-produced material that is not the contractor, such as an aggregate producer or ready-mix concrete supplier.

2.11 ***Verification Sampling and Testing*** – Sampling and testing performed to validate the quality of a product.

3. ACCEPTANCE PROGRAM

3.1 ***General*** – Materials incorporated into any highway construction project shall be subject to verification sampling and testing, as well as, QC sampling and testing when required by the specifications.

3.2 ***Verification Sampling and Testing (Frequency, Location and Attributes)*** – Frequency of the verification sampling and testing will depend on whether or not the contractor's QC testing (See Section 3.3) is a part of the acceptance decision. Verification sampling and testing shall be performed at the location and frequency, and for the attributes (gradation, density, air content, etc.) established in the NDOR Materials Sampling Guide. Verification sampling and testing personnel, laboratories, and equipment shall be qualified in accordance with the NDOR Sampling and Testing Personnel Qualification Program (Appendix A) and the NDOR Laboratory/Equipment Qualification Program (Appendix B) and shall be evaluated under the Independent Assurance Program shown in Section 4 of this document. Qualified NDOR personnel or their designated agents shall perform verification sampling and testing. Copy of the verification test results will be sent to the contractor, NDOR project manager, and the Materials and Research Central Laboratory.

3.2.1 *Project Produced Materials* – These materials can generally be described as those that are produced to meet the requirements of a specific project. They are characterized by being sampled at the construction project site and tested either at the project site or at a qualified laboratory. Aggregates, asphaltic concrete, and Portland cement concrete are considered project produced materials. The NDOR Materials Sampling Guide identifies the location and frequency for sampling and testing the various attributes (gradation, density, air content, etc.) of project produced materials.

3.2.2 *Manufactured Materials* – These materials can generally be described as those that are manufactured to meet the requirements of a specific AASHTO, ASTM, or other standard. They can be used on numerous construction projects, provided they meet specification requirements for those projects. These materials may require sampling at the project site with the sample forwarded to the Materials and Research Central Laboratory for testing. These materials may also require manufacturer certifications and/or manufacturer certified test reports. Some manufactured materials may be pre-tested through arrangements with the Materials and Research Central Laboratory. Pre-tested materials are identified by approved lot numbers or identification tags indicating an NDOR approved material. Pre-tested materials that have been primarily tested or approved by the Materials and Research Central Laboratory may be used without further sampling and testing.

3.2.3 *Approved Products List* – Materials identified in the NDOR Approved Products List may be used on a project by notifying the Engineer of the specific brand name. The NDOR Materials and Research Central Laboratory approves these materials for use on projects. Materials on the NDOR Approved Products List do not require sampling and testing on the project site, unless requested by the Engineer. They do not re-

quire a certificate of compliance or certified test report unless the need for such a document is specifically identified in the NDOR Approved Products List or the project specifications.

3.3 ***Quality Control Sampling and Testing*** – Contractor performed Quality Control (QC) sampling and testing may be used as a part of the acceptance decision when required or allowed by the project specifications. Quality Control sampling and testing personnel, laboratories, and equipment shall be qualified in accordance with the NDOR Sampling and Testing Personnel Qualification Program (Appendix A) and the NDOR Laboratory/Equipment Qualification Program (Appendix B) and shall be evaluated under the Independent Assurance Program shown in Section 4 of this document. Quality control test results shall be validated by verification test results (See Section 3.2) obtained from independently taken samples. Qualified NDOR personnel or their designated agents shall perform verification sampling and testing.

3.3.1 *Quality Control Program* – When required by the specifications a Quality Control Program must be developed by the contractor and submitted as required by the contract for approval. The minimum requirements of a Quality Control Program are shown in Appendix C. Specifications may require that additional information be provided in the Quality Control Program.

3.3.2 *Dispute Resolution System* – When quality control test results are used in the acceptance decision, discrepancies arising between the verification sampling and testing performed by NDOR, or its designated agents, and quality control sampling and testing performed by the contractor, shall be resolved in a reliable, unbiased manner, by referee testing or evaluation performed by the Materials and Research Central Laboratory. The decision by the Materials and Research Central Laboratory will be final. The Materials and Research Central Laboratory may obtain the services of an independent commercial laboratory accredited in the testing to be performed, by the AASHTO Accreditation Program or a comparable laboratory accreditation program approved by FHWA, to aid in resolving any dispute. The decision to utilize the services of an independent commercial laboratory rests solely with the Materials and Research Central Laboratory.

4. INDEPENDENT ASSURANCE PROGRAM

4.1 ***General*** – All sampling and testing procedures, personnel and equipment used as part of the acceptance decision shall be evaluated by the Independent Assurance (IA) Program. Any non-NDOR laboratory which performs Independent Assurance sampling and testing shall be accredited in the testing to be performed, by the AASHTO Accreditation Program or a comparable laboratory accreditation program approved by FHWA. The Independent Assurance Program includes both system and project-based approaches. The system approach shall be used unless the specifications for a project specifically require a project-based approach for independent assurance sampling and testing.

4.1.1 *System Approach* – The system approach bases frequency of independent assurance activities on time, regardless of the number of tests, quantities of materials, or number of projects being tested by an individual being evaluated.

4.1.2 *Project-Based Approach* – The project-based approach bases frequency of independent assurance activities primarily on quantities of materials being tested and requires minimum independent assurance activities on the project.

4.2 ***Sampling and Testing Frequency and Location*** – Independent assurance sampling and testing shall be performed at the location and frequency, and for the attributes (gradation, density, air content, etc.) established in the NDOR Materials Sampling Guide. Sampling and testing procedures performed by the Materials and Research Central Laboratory are not subject to the independent assurance program since the laboratory maintains accreditation through the AASHTO Accreditation Program.

4.3 ***Testing Equipment*** – Branch Laboratory equipment used for independent assurance sampling and testing shall be qualified by the Materials and Research Central Laboratory in accordance with the NDOR Laboratory/Equipment Qualification Program (Appendix B). The Central Laboratory shall qualify any AASHTO accredited commercial laboratory equipment used for independent assurance sampling and testing by verifying that the equipment has been calibrated/verified and that supporting calibration/verification data is on file. The frequency for qualifying independent assurance sampling and testing equipment shall not exceed one year. Qualification shall be scheduled on a more frequent basis if the operation of the equipment is suspect. The independent assurance equipment shall be other than that used for quality control sampling and testing. Any equipment used to perform verification and/or quality control sampling and testing for an acceptance decision shall be evaluated by independent assurance sampling and testing personnel. This evaluation shall include calibration checks and split or proficiency sample tests. The requirements for, and frequency of, verification and/or quality control equipment calibration are shown in Appendix B. Acceptable tolerance limits for the comparison of test results for split or proficiency samples are shown in Appendix D.

4.4 ***Testing Personnel*** – Branch Laboratory personnel who perform Independent Assurance sampling and testing shall be qualified by the Materials and Research Central Laboratory in accordance with the NDOR Sampling and Testing Personnel Qualification Program (Appendix A). The Central Laboratory shall qualify any AASHTO accredited commercial laboratory personnel performing independent assurance sampling and testing by verifying that the laboratory is accredited in the applicable test procedures and that the personnel meet the AASHTO Accreditation Program requirements. When contractor's QC testing is part of the acceptance program, Individuals performing independent assurance sampling and testing may also perform the verification sampling and testing. When contractor's QC testing is not part of the acceptance program, Individuals performing independent assurance sampling and testing shall be other than those who perform verification sampling and testing. Any individual who performs verification or quality control sampling and testing shall be evaluated by independent assurance sampling and testing personnel at least once a year. This evaluation shall include observation and spilt or proficiency sampling and testing. Acceptable tolerance limits for the comparison of test results from spilt or proficiency samples are shown in Appendix D.

4.5 ***Comparison of Test Results*** – A prompt comparison of test results obtained by the individual being evaluated and the independent assurance tester shall be performed by a Quality Assurance Manager, a qualified evaluator designated by the Quality Assurance Manager, or AASHTO accredited commercial laboratory personnel. Acceptable tolerance limits for the comparison of test results from split or proficiency samples are shown in Appendix D. If the comparison of test results do not comply with the tolerances, a review of the test procedure and testing equipment shall be performed immediately to determine the source of the discrepancy. Corrective action must be identified and incorporated as appropriate, followed by additional independent assurance testing. Test results from all samples involved in the Independent Assurance Program shall be documented with reports maintained in Branch Laboratory files. Copies of these reports shall be transmitted to the appropriate District. When a project-based approach is used for the Independent Assurance Program, copies of the reports shall also be maintained in the project files. If an AASHTO accredited commercial laboratory performs independent assurance testing, all test results and reports shall be forwarded to the Central Laboratory for distribution to the appropriate Branch Laboratory and District.

4.6 Annual Report of Independent Assurance Program Results – An annual report, conforming in substance to that shown in Appendix F, shall be submitted to the FHWA Division Administrator summarizing the results of the NDOR system approach Independent Assurance Program.

5. MATERIALS CERTIFICATION

5.1 A materials certification, conforming in substance to that shown in Appendix E shall be submitted to the FHWA Division Administrator for each construction project which is subject to FHWA oversight activities.

6. CONFLICT OF INTEREST

6.1 To avoid the appearance of a conflict of interest, any qualified non-NDOR laboratory shall perform only one of the following types of testing on the same project: verification testing, quality control testing, independent assurance testing, or dispute resolution testing.

7. QUALIFICATION OF LABORATORIES AND SAMPLING AND TESTING PERSONNEL

7.1 *Laboratories*:

7.1.1 The NDOR Materials and Research Central Laboratory shall be accredited and maintain accreditation through the AASHTO Accreditation Program.

7.1.2 After June 29, 2000, all contractor, vendor and NDOR testing used in the acceptance decision shall be performed by qualified laboratories and/or equipment in accordance with the NDOR Laboratory/Equipment Qualification Program (Appendix B).

7.1.3 After June 29, 2000, any non-NDOR laboratory designated to perform independent assurance sampling and testing shall be accredited in the testing to be performed by the AASHTO Accreditation Program.

7.1.4 After June 29, 2000, any non-NDOR laboratory that is used in dispute resolution sampling and testing shall be accredited in the testing to be performed by the AASHTO Accreditation Program.

7.2 *Sampling and Testing Personnel* – After June 29, 2000, all sampling and testing data to be used in the acceptance decision or the independent assurance program shall be performed by qualified sampling and testing personnel in accordance with the NDOR Sampling and Testing Personnel Qualification Program (Appendix A).

APPENDIX A

SAMPLING AND TESTING PERSONNEL QUALIFICATION PROGRAM

A1. ***Purpose*** – This program provides uniform statewide procedures for sampling and testing personnel qualifications to ensure that tests required by the specifications are performed in accordance with prescribed sampling and testing methods.

A2. ***Qualification of Sampling and Testing Personnel***:

A2.1 Any individual who samples and/or performs required tests on materials for acceptance or verification must be qualified.

A2.2 Sampling and testing personnel will be qualified to perform tests for the acceptance or verification of materials in the areas of aggregates, soils, bituminous materials and Portland cement concrete. The test methods for which individuals will be qualified shall include, but are not limited to, those shown in Table A1. There may be other test procedures used in specific geographical locations of the state or used on unique construction projects in which sampling and testing personnel need to be qualified.

A3. ***Responsibility for Qualifying Sampling and Testing Personnel***:

A3.1 The following personnel may qualify an individual to perform required tests on materials by observing each test and administering the required examinations:

A3.1.1 Materials and Research Central Laboratory personnel.

A3.1.2 Quality Assurance Managers; responsible for Branch Laboratory personnel and operations and responsible for Independent Assurance Sampling.

A3.1.3 Qualified Branch Laboratory personnel who have been authorized by a Quality Assurance Manager.

A3.1.4 Other NDOR personnel who have been qualified to perform specific tests may be authorized by the Materials and Research Central Laboratory to qualify others.

A 3.1.5 Independent sources, such as the American Concrete Institute (ACI) or qualified consultants, with the approval of the Materials and Research Central Laboratory.

A3.2 Each Branch Laboratory shall maintain a minimum of one individual qualified by the Materials and Research Central Laboratory for each test procedure performed within the Branch Laboratory's area of responsibility.

A4. ***Qualification Procedure***:

A4.1 Except as noted in paragraph A4.2.1, to qualify ,an individual must successfully perform the specific test or series of tests related to a specific level of qualification as identified in Table A1. The test

performance, and any calculations required to determine specification compliance, must be done in the presence of an authorized evaluator as identified in Section A3.1. Successful performance is defined as demonstrating the ability to properly perform key elements for each test method. Anyone failing to demonstrate the ability to perform a test will, at the evaluator's convenience, be allowed a maximum of two re-tests per test method in a calendar year.

A4.2.1 Newly hired and temporary employees may obtain provisional qualification through on-the-job training by a certified technician. The provisional qualification will permit the employee to perform material testing while within sight and sound of a certified field or qualified laboratory technician. An employee will be able to perform testing under the provisional qualification for a maximum of one construction season, however, the person must attend the first available certification training session. Temporary summer employees, who are students enrolled in post secondary education, will be allowed to work a total of three summers before needing to become fully certified.

A4.2 After successful performance of a test method, the individual must also pass a written examination administered by an authorized evaluator with a minimum score of 70 percent. An individual failing the written examination may request a retest. The individual will be allowed an unlimited number of retests in a calendar year; however, the scheduling of retests for the written examination is at the evaluator's convenience.

A4.3 If an individual fails to be qualified in a calendar year, or if the qualification is revoked, the individual must obtain additional training and again complete the testing requirements identified in Sections A4.1 and A4.2.

A4.4 A standard set of examinations will be used statewide. The examination will be developed by a committee of personnel from the Materials and Research Central laboratory, Branch Laboratories, and may include industry representatives for test procedures used in contractor performed quality control testing.

A4.5 As a part of the qualification process the individual must participate in proficiency or split sample testing through the independent assurance program. The results of the proficiency or split sample testing will be evaluated within the acceptable tolerance limits identified in Appendix D. If the comparison of test results do not comply with the tolerances, a review of the test procedure and equipment shall be performed immediately to determine the source of the discrepancy. Corrective action must be identified and incorporated as appropriate, prior to the individual performing additional testing on that test method.

A4.6 Qualification of an individual is valid for not more than five years, after which the individual must be re-qualified.

A4.7 Individuals certified through an independent source approved by the Materials and Research Central Laboratory are exempt from the qualification procedure outlined above.

A4.8 Individuals performing contractor quality control testing who have been qualified or certified by another state transportation department may be exempt from all or portions of the qualification procedure outlined above. The Materials and Research Central Laboratory will make decisions regarding the granting of a total or partial exemption. To apply for an exemption, the contractor must submit to the Materials and Research Central Laboratory, the names of the individuals seeking exemption, a listing of test procedures for which the individual has been qualified or certified by another state transportation department and the individual's name, address and telephone number from the state transportation department having responsibility for that state's qualification/certification program.

A5. *Documentation*:

A 5.1 The Materials and Research Central Laboratory will be responsible for maintaining documentation of all individuals qualified to perform required tests for the acceptance of materials. The Central Laboratory will provide District Offices with records of the qualification certificates for individuals performing testing on projects in their area of responsibility. The requirement for maintaining documentation is applicable to both NDOR personnel performing acceptance and verification testing, and contractor personnel performing quality control testing.

A5.2 Documentation to be maintained by the Materials and Research Central Laboratory includes:

A5.2.1 *Sampling and Testing Personnel Qualification Record* – A record for each individual listing all tests the individual has been qualified to perform.

A5.2.2 *Qualification Worksheet* – A form listing the key elements of the test method as used by the evaluator conducting the observation to record results.

A5.2.3 Copies of written examinations.

A5.3 Retention of documents will be for the life of the qualification.

A5.4 The qualification certificate issued to an individual will show each test procedure for which the individual was qualified or a title, such as "Field Tester I", which can be identified as encompassing a series of test procedures, and the date the qualification will expire.

A6. *Disqualification*:

A6.1 Notice of abuse or neglect for any procedures or responsibilities identified in this Quality Assurance Program shall be made to the Qualification Advisory Committee, chaired by the Materials and Research Engineer. The Advisory Committee will notify the person being investigated of the allegation and that the charges are being reviewed. The difference between neglect and abuse is intent and shall be determined by the Qualification Advisory Committee. Penalties shall be imposed upon the recommendation of the Qualification Advisory Committee. Penalties shall range from a minimum of 10-day suspension to a maximum of permanent revocation of the qualification certificate.

A6.2 *Neglect* – The first instance of neglect shall result in a 10-day suspension of the qualification certificate. The second instance of neglect shall result in a 30-day suspension of the qualification certificate. A third instance of neglect shall be considered as and treated the same as abuse. Example of Neglect – failing to post or properly record a test result.

A6.3 *Abuse* – The first instance of abuse shall result in a 90-day suspension of the qualification certificate. The second instance of abuse shall result in permanent revocation of the qualification. Permanent revocation of a qualification shall result in that individual being ineligible for qualification at any level. Example of Abuse – falsification of test results.

A6.4 *Qualification Advisory Committee* – In addition to the Materials and Research Engineer as chair of the committee, Two other NDOR members and two industry members shall be appointed to the committee by the Materials and Research Engineer. The Nebraska Chapter of the Associated General Contractors shall be consulted concerning the selection of the two industry members. The appointed members shall have no direct involvement with the case. The Qualification Advisory Committee may, at their discretion, conduct a hearing involving the individual accused of neglect or abuse and other interested parties.

A6.5 The policies and procedures described above are applicable to NDOR personnel, or designated agent, involved in the acceptance and verification of materials as

well as contractor personnel or vendor involved in quality control testing.

A6.6 The reference made above to "suspension" applies only to suspension of the qualification certificate and is not intended to imply that an individual will be suspended from work. While suspension from work or termination of employment may be a consideration depending on the level of neglect or abuse exhibited, such action would be taken through normal NDOR or contractor procedures for disciplinary action.

TABLE A1 – TEST METHODS FOR QUALIFICATION OF SAMPLING AND TESTING PERSONNEL

PORTLAND CEMENT CONCRETE	
CONCRETE FIELD TEST TECHNICIAN – LEVEL 1	
ASTM C 31	Making and Curing Concrete Test Specimens in the Field
ASTM C 138	Unit Weight, Yield and Air Content (Gravimetric) of Concrete
ASTM C 143	Slump of Hydraulic Cement Concrete
ASTM C 172	Sampling of Freshly Mixed Concrete
ASTM C 173	Air Content of Freshly Mixed Concrete by the Volumetric Method
ASTM C 231	Air Content of Freshly Mixed Concrete by the Pressure Method
ASTM C 1064	Temperature of Freshly Mixed Concrete
CONCRETE PLANT TECHNICIAN – LEVEL 2	
NOTE: A Concrete Plant Technician, Level 2 must be qualified in the test methods identified for Concrete Field Technician, Level 1, in addition to the following test methods.	
AASHTO T 2	Sampling Aggregates
AASHTO T 27	Sieve Analysis of Fine and Coarse Aggregates
AASHTO T 248	Reducing Field Samples of Aggregate to Testing Size
AASHTO T 255	Total Moisture Content of Aggregate by Drying
NDR T 506	Determination of the Free Moisture Content of Aggregates

TABLE A1 – TEST METHODS FOR QUALIFICATION OF SAMPLING AND TESTING PERSONNEL (CONTINUED)

ASPHALT CONCRETE	
ASPHALT CONCRETE TEST TECHNICIAN	
NOTE: An Asphalt Concrete Field Inspector must be qualified in the test methods identified for Aggregate Inspector in addition to the following test methods.	
AASHTO T 166	Bulk Specific Gravity of Compacted Bituminous Mixtures Using Saturated Surface-Dry Specimens
AASHTO T 168	Sampling Bituminous Paving Mixtures
AASHTO T 209	Theoretical Maximum Specific Gravity and Density of Bituminous Paving Mixtures
AASHTO T 27	Sieve Analysis of Fine and Coarse Aggregate
AASHTO T 30	Mechanical Analysis of Extracted Aggregates
AASHTO T 84	Specific Gravity and Absorption of Fine Aggregate
AASHTO T 85	Specific Gravity and Absorption of Coarse Aggregate
AASHTO T 269	Volumetric Analysis of Compacted Hot Mix Asphalt (HMA)
AASHTO T 304	Uncompacted Void Content of Fine Aggregate
AASHTO T 248	Reducing Samples of Aggregate to Testing Size
ASTM D 5821	Determining the Percentage of Fractured Particles in Coarse Aggregate
AASHTO T 312	Preparing and Determining the Density of Hot Mix Asphalt (HMA) Specimens by Means of the SHRP Gyratory Compactor
AASHTO T 308	Asphalt Content of Hot Mix Asphalt (HMA) by the Ignition Method
AASHTO T 269	Percent Air Voids in Compacted Dense and Open Bituminous Mixtures
NDR T 587	Density of Bituminous Concrete In-Place by Nuclear Method

TABLE A1 – TEST METHODS FOR QUALIFICATION OF SAMPLING AND TESTING PERSONNEL (CONTINUED)

SOILS	
SOIL TEST TECHNICIAN	
AASHTO T 87	Dry Preparation of Disturbed Soil and Soil Aggregate Samples for Test *
AASHTO T 89	Determining the Liquid Limit of Soils *
AASHTO T 90	Determining the Plastic Limit and Plasticity Index of Soils *
AASHTO T 99	Moisture-Density Relations of Soils Using a 2.5-kg (5.5-lb) Rammer and a 305-mm (12 in.) Drop *
ASTM D 2167	Density of Soil In-Place by the Rubber Balloon Method **
AASHTO T 310	Density of Soil and Soil-Aggregate In-Place by Nuclear Methods (Shallow Depth) **
AASHTO T 248	Reducing Samples of Aggregate to Testing Size *
AASHTO T 265	Laboratory Determination of Moisture Content of Soils *
AASHTO T 272	Family of Curves – One Point Method *
ASTM D 2488	Description and Identification of Soils (Visual-Manual Procedure) **

** Project personnel Performing sampling and testing

* Branch Lab Personnel Performing sampling and testing

APPENDIX B

LABORATORY/EQUIPMENT QUALIFICATION PROGRAM

B1. ***Purpose*** – This program provides uniform statewide procedures to ensure that laboratory facilities and equipment are adequate for performance of the required sampling and testing of materials.

B2. ***Scope*** – The scope of this program covers the qualification of all laboratories and equipment used for acceptance, verification, quality control, independent assurance and dispute resolution sampling and testing. The qualification of non-NDOR equipment is intended only to ensure that the equipment has been calibrated and/or verified on a regularly scheduled basis. The actual calibration and/or verification of equipment is the responsibility of the owner, unless otherwise required by NDOR. The Materials and Research Central Laboratory will calibrate branch laboratory equipment. All other NDOR-owned test equipment used for verification and independent assurance testing at the construction site will be calibrated by the Quality Assurance Manager. Equipment may be subjected to calibration, verification or other inspection prior to qualification or through the Independent Assurance program.

B3. ***Laboratory/Equipment Qualification and Responsibility for Qualification*** – All laboratories that perform testing for NDOR require qualification. Laboratory and equipment qualification shall be as follows:

B3.1 *NDOR Materials and Research Central Laboratory* – The Materials and Research Central Laboratory shall be accredited through the AASHTO Accreditation Program.

B3.2 *NDOR Branch Laboratories* – Branch Laboratories shall be qualified by the Materials and Research Central Laboratory.

B3.3 *Field Laboratories* – Field laboratories at construction sites generally consist of a laboratory building provided by a contractor and testing equipment owned and provided by NDOR.

B3.3.1 *Laboratory Building Qualification* – The laboratory building and any contractor furnished testing equipment shall be qualified by the NDOR Branch Laboratory Quality Assurance manager. The Quality Assurance Manager may authorize other Branch Laboratory personnel to perform the laboratory building qualification.

B3.3.2 *Equipment Qualification* – NDOR owned testing equipment used in a field laboratory shall be qualified by the NDOR Branch Laboratory Quality Assurance Manager. The Quality Assurance Manager may authorize other Branch Laboratory personnel to perform equipment qualification activities.

B3.4 *Commercial Laboratories* –

B3.4.1 Commercial laboratories performing independent assurance testing or dispute resolution testing shall be accred-

ited by the AASHTO Accreditation Program or a comparable laboratory program approved by the Federal Highway Administration. In addition, commercial laboratories performing independent assurance testing or dispute resolution testing must be qualified by the Materials and Research Division Central Laboratory to ensure that accreditation has occurred in the sampling and testing procedure being performed

B3.4.2 Commercial laboratories performing contract quality control testing shall be qualified by the Materials and Research Central Laboratory or the Branch Laboratory Quality Assurance Manager. The Materials and Research Central Laboratory shall determine the responsibility for qualifying commercial laboratories.

B3.5 *Contractor Laboratories* – Contractor laboratories, when performing quality control testing, shall be qualified by the Materials and Research Central Laboratory or a Branch Laboratory Quality Assurance Manager. The Materials and Research Central Laboratory shall determine the responsibility for qualifying contractor laboratories. If the responsibility is assigned to the Branch Laboratory, the Quality Assurance Manager may authorize other Branch Laboratory personnel to perform contractor laboratory qualification activities.

B3.6 *Vendor Laboratories (Material Suppliers)* – Vendor laboratories, when performing quality control testing, shall be qualified by the Materials and Research Central Laboratory or a Branch Laboratory Quality Assurance Manager. The Materials and Research Central Laboratory shall determine the responsibility for qualifying vendor laboratories. If the responsibility is assigned to the Branch Laboratory, the Quality Assurance Manager may authorize other Branch Laboratory personnel to perform vendor laboratory qualification activities.

B4 *Equipment Qualification and Responsibility for Qualification*:

B4.1 Non-specialized sampling and testing equipment is considered as a part of the laboratories identified in Section B3 even though the equipment may not be physically housed in the laboratory. Responsibility for qualification of the equipment is the same as in Section B3.

B4.2 Specialized sampling and testing equipment used for pay factor determination, material acceptance and/or material verification; that is, equipment not directly associated with one of the laboratories identified in Section B3, shall be qualified by the Materials and Research Central Laboratory. Specialized equipment, such as profilographs and nuclear density gauges, will be identified by the Materials and Research Division.

B5*. Laboratory Qualification Process* – The laboratory authority identified in Section B3 shall perform the following functions:

B5.1 *Accredited Laboratories (Laboratories accredited through the AASHTO Accreditation Program.)*:

B5.1.1 Verify that the accreditation is current and has occurred in the sampling and testing procedures performed.

B5.2 *Non-Accredited Laboratories (All laboratories except accredited laboratories and field laboratory buildings.)*:

B5.2.1 Identify the scope of testing to be performed by the laboratory.

B5.2.2 Verify that manuals and/or test methods used to perform the tests are available and current.

B5.2.3 Document that the laboratory has the required equipment to perform the tests.

B5.2.4 Check the calibration/verification records for each piece of equipment to include:

B5.2.4.1 Description of the equipment.

B5.2.4.2 Identification or serial number of the equipment.

B5.2.4.3 Identification of any traceable standard used for calibration.

B5.2.4.4 Frequency of calibration.

B5.2.4.5 Date of last calibration.

B5.2.4.6 Date of next scheduled calibration.

B5.2.4.7 Procedure used to calibrate equipment.

B5.2.4.8 Procedure used to identify equipment not in compliance.

B5.2.5 In addition, all equipment may be subjected to calibration/verification by the qualifying authority.

B5.3 *Field Laboratories (Laboratory Building)*:

B5.3.1 Verify that the laboratory building meets the requirements of the specification.

B5.3.2 Verify that the building, furnishings and utilities have been maintained to the extent that testing equipment and testing personnel will be adequately accommodated.

B6. *Frequency for Laboratory Qualification:*

B6.1 *Accredited Laboratories.*

B6.1.1 Accredited laboratories shall be qualified annually.

B6.1.2 If the laboratory has not previously been used by NDOR or has not been used within the past year, the laboratory must be qualified prior to performing any testing.

B6.2 *Non-Accredited Laboratories* – Laboratories that have not been accredited through the AASHTO Accreditation Program shall be qualified at an interval not to exceed two years.

B6.3 *Field Laboratories (Laboratory Building)* – Contractor provided laboratory buildings shall be qualified as described in Section B5 at intervals not to exceed two years.

B6.4 The owner of the laboratory shall have the responsibility for requesting laboratory qualification to meet the frequency schedule identified in Section B6.

B7. *Laboratory Equipment – Calibration Procedures and Frequencies:*

B7.1 The frequency and procedures for calibrating/verifying testing equipment is shown in Table B1.

B7.2 The calibration procedure and frequency of calibration are applicable to equipment used for quality control testing, verification testing and independent assurance testing.

B7.3 Calibration procedures and frequencies shown herein may vary from those established by the AASHTO Accreditation Program. Laboratories requesting AASHTO accreditation or accreditation by a comparable laboratory program approved by the Federal Highway Administration shall comply with accreditation program requirements for calibration frequencies and procedures.

B7.4 The qualifying authority identified in Section B3 has the right to require calibration/ verification of equipment at intervals more frequent than discussed herein if the performance of the equipment is suspect or if the equipment has been moved.

B8. *Documentation*.

B8.1 *Laboratory Qualification Records* – Copies of laboratory qualification records shall be kept on file as follows:

B8.1.1 One copy within the qualified laboratory.

B8.1.2 One copy by the qualifying authority as identified in Section B3.

B8.1.3 One copy by the Materials and Research Central Laboratory for any laboratory that is mobile or any commercial laboratory that may be performing testing in more than one District. It is the responsibility of the qualifying authority to submit documentation to the Materials and Research Central Laboratory.

B8.2 *Equipment Calibration/Verification Records:*

B8.2.1 Calibration/verification records for laboratory equipment shall be kept on file in the laboratory.

B8.2.2 Copies of calibration/verification records for NDOR owned equipment that is not normally a permanent part of a laboratory shall be kept on file as follows:

B8.2.2.1 One copy by the qualifying authority identified in Section B3.

B8.2.2.2 One copy by the District having ownership of the equipment.

B8.3 All laboratory qualification records and equipment calibration/verification records shall be kept on file for a period of three years.

B9. *Non-Compliance*:

B9.1 Laboratories must meet the above requirements to become qualified. Laboratories failing to maintain the requirements contained herein are subject to disqualification.

B9.2 Any equipment failing to meet specified calibration/verification requirements for a specific test method shall not be used for that test method.

B10*. Dispute Resolution* – Disputes concerning laboratory qualification or calibration/verification of equipment that cannot be resolved at the District level will be submitted to the Materials and Research Central Laboratory for resolution. The decision of the Materials and Research Central Laboratory will be final. The Materials and Research Central Laboratory may obtain the services of an AASHTO accredited independent commercial laboratory to aid in resolving a dispute. This independent commercial laboratory must be independent of the original process. The decision to utilize the services of an independent commercial laboratory rests solely with the Materials and Research Central Laboratory.

TABLE B1 – EQUIPMENT CALIBRATION AND VERIFICATION FREQUENCY

EQUIPMENT	REQUIREMENT	INTERVAL (Months)	METHOD
Balances, Scales and Weights	Verify	12	AASHTO M231
Compression Test Machines	Calibrate	12	ASTM E4
Gyratory Compactors	Verify	24	AASHTO TP4-99
Mechanical Compactors (Marshall)	Calibrate	24	AASHTO T245
Nuclear Moisture/Density Gauges	Calibrate*	12	Manufacturer's Recommendation
Ovens	Verify Temperature Settings	12	See Sheet B-6
PCC Air Meters	Calibrate	3	ASTM C231
PCC Metallic Reusable Molds	Check Critical Dimensions	12	ASTM C470
PCC Single Use Molds	Check Dimensions Each Shipment	—	ASTM C470
PCC Slump Cones	Check Critical Dimensions	12	ASTM C143
PCC Unit Weight Measures	Calibrate	12	ASTM C29
Sieves	Coarse (≥ No. 4) Check Openings and Physical Condition Fine (< No. 4) Check Physical Condition	12	AASHTO M92

*Calibration to be performed by Materials and Research Central Laboratory.

Procedure for Verifying Ovens

Equipment Checked: DRYING OVENS

Purpose:

This method provides instructions for checking drying ovens used in the laboratory.

Inspection Equipment Required:

1. A calibrated thermometer graduated in 1.0^{o} C increments having a range which includes the temperature range to be checked.
2. A thermometer well to retain heat while the oven door is open.
3. A clothespin to hold thermometer in such a manner as to enable the operator to read the scale easily.

Tolerance:

Drying ovens shall be capable of maintaining a constant temperature range listed in the appropriate test methods.

Procedure:

1. Place the thermometer inside the well with the clothespin attached to the thermometer. Position the thermometer on the shelf where the samples are normally dried.
2. Take the first reading at least 1 hour after closing the oven (oven should remain undisturbed).
3. Take as many readings as necessary to determine if the temperature range is within the specified tolerance (three consecutive readings, taken no less than ½ hr. apart, within the tolerance allowed are adequate).
4. Adjust the temperature of the oven if an observed temperature reading is outside the tolerance specified (allow at least ½ hr. for the temperature to stabilize between each adjustment). Return to step 3.

Verification Interval:

12 months

Report:

Send a copy of the results of each oven checked to the In-House Inspection Team for verification and issuance of a Certificate of Verification.

APPENDIX C

QUALITY CONTROL PROGRAM MINIMUM REQUIREMENTS

C1. ***General*** – When required by the specifications a "Quality Control Program" must be developed by the contractor and submitted as required by the contract for approval. Minimum requirements for a Quality Control Program are identified herein. The specifications may require additional documentation or a more detailed Quality Control Program than these minimum requirements. The specification requirement takes precedent over the minimum requirements described herein.

C2. ***Minimum Quality Control Program Requirements*:**

C2.1 The contractor will provide, maintain and follow a quality control system that reasonably ensures the materials and work incorporated into the project conforms to the contract requirements.

C2.2 The contractor shall provide qualified sampling and testing personnel to perform quality control inspection, sampling and testing required by the contract

C2.3 The contractor will develop a Quality Control Plan and submit it to the Engineer for review and approval as identified in the specifications. The contractor's Quality Control Plan may include Quality Control Plans developed by subcontractors and/or vendors. As a minimum the Quality Control Plan will:

C2.3.1 Include the project number, signature and date of signing by the contractor's authorized representative.

C2.3.2 Identify the laboratory(s) to be used.

C2.3.3 Provide an organization structure identifying:

C2.3.3.1 The program administrator and names of sampling and testing personnel.

C2.3.3.2 The qualifications, experience and level of authority of the program administrator.

C2.3.3.3 The certificate numbers and duties of all sampling and testing personnel.

C2.3.3.4 Include a sampling, testing and analysis plan with frequencies, location of sampling and methods of testing and analysis.

C2.3.3.5 Include procedures for documenting quality control activities.

C2.3.3.6 Address corrective actions to be taken when quality control and/or acceptance criteria are not met.

C2.3.3.7 Address methods used to control product quality that cannot be adequately addressed by product testing.

C2.3.3.8 An Asphalt Production Placement and Compaction Checklist, conforming in substance to that shown in Appendix G, shall be submitted to the NDOR Project Manager, NDOR Quality Assurance Manager, and the Contractor.

C2.4 The provisions of the Quality Control Program apply to the material and construction furnished under the contract. The Quality Control Program must, to the satisfaction of the Engineer, deal with issues affecting the achievement of a quality product, including workmanship, construction methods, plant operations, and sampling and testing methods.

APPENDIX D

ACCEPTABLE TOLERANCE LIMITS FOR INDEPENDENT ASSURANCE SPLIT OR PROFICIENCY SAMPLES

MATERIAL	TEST PROCEDURE	TEST METHOD	TOLERANCE
Portland Cement Concrete Coarse Aggregate	Gradation > No. 4 ≤ No. 4	NDR T 27	 ± 5% ± 3%
Portland Cement Concrete Fine Aggregate	Gradation 3/8" thru No. 200	NDR T 27	 ± 3%
Portland Cement Concrete Complete Mixture	Yield Slump Air Content Compressive Strength	ASTM C 138 ASTM C 143 ASTM C 138 ASTM C 31	± 3% ± 1.0 in. ± 1% 20% of the mean*

Embankment	In-Place Density In-Place Moisture	AASHTO T 238 AASHTO T 239	± 2.5% ± 1.5%
Subgrade	In-Place Density In-Place Moisture	AASHTO T 238 AASHTO T 239	± 2.5% ± 1.5%
Granular Foundation Course (Regular)	Gradation In-Place Density	NDR T 27 AASHTO T 238 AASHTO T 239	± 3% ± 2.5% ± 1.5%

	In-Place Moisture		

APPENDIX D (CONTINUED)

MATERIAL	TEST PROCEDURE	TEST METHOD	TOLERANCE
Asphalt Concrete (Superpave) Coarse Aggregate	Coarse Aggregate Angularity	ASTM D 5821	± 10.0%
Asphalt Concrete (Superpave) Fine Aggregate	Fine Aggregate Angularity	AASHTO T 304 (Method A)	± 0.5%
Asphalt Concrete (Superpave) Combined Aggregate	Gradation	AASHTO T 30	**0 – 3.0 ± 2.0% 3.1 – 10.0 ± 3.0% 10.1 – 20.0 ± 5.0% 20.1 – 30.0 ± 6.0% 30.1 – 40.0 ± 7.0% 40.1 – 50.0 ± 9.0%
	**Percent in size fraction between two consecutive aggregate sieves.		
Asphalt Concrete (Superpave) Complete Mixture	Asphalt Content Gyratory Compaction Air Voids Voids in Mineral Aggregate Bulk Specific Gravity Theoretical Maximum Specific Gravity	Ignition Oven AASHTO T 308 AASHTO T 312 AASHTO T 269 Calculated AASHTO T 166 AASHTO T 209	± 0.5% Visual Observation ± 0.5% -1.00 to +1.25% From Min. ± 0.020 ± 0.015

Note: For specialty mixes see special provisions.

APPENDIX D (CONTINUED)

MATERIAL	TEST PROCEDURE	TEST METHOD	TOLERANCE
Asphalt Concrete (Convetional) Combined Aggregate	Gradation >5/8" 5/8" thru No. 200 Passing No. 200	AASHTO T 30	 ± 5% ± 3% ± 1.5%
Asphalt Concrete (Conventional) Complete Mixture	Asphalt Content Marshall Compaction Air Voids Voids in Mineral Aggregate Bulk Specific Gravity Theoretical Maximum Specific Gravity	Ignition Oven AASHTO T 308 AASHTO T 245 AASHTO T 269 Calculated AASHTO T 166 AASHTO T 209	 ± 0.5% Visual Observation ± 0.5% -1.00 to +1.25 From Min. ± 0.020 ± 0.015

*The difference between compared test results shall not exceed the indicated percentage of the mean of the compared test results – the mean being the average of the two test results.

EXAMPLE: Portland Cement Concrete Compressive Strength

Job control test value	3000 psi
Independent Assurance test value	4000 psi
Mean	3500 psi
20% difference	700 psi

Both values are within 20% of the mean

APPENDIX E

LETTER OF CERTIFICATION BY STATE ENGINEER

Division Administrator
U. S. Department of Transportation
Federal Highway Administration
Lincoln, Nebraska

Date: _____

Nebraska Project No.: _____

Location: _____

Contractor: _____

Type of Work: _____

This is to certify that:

The results of the tests used in the acceptance program indicate that the materials incorporated in the construction work, and the construction operations controlled by sampling and testing, were in conformity with the approved plans and specifications. All independent assurance samples and tests are within tolerance limits of the samples and tests that are used in the acceptance program.

Exceptions to the plans and specifications are explained on the attached sheet.

Sincerely

Materials and Research Engineer

_____ Additional Materials Certifications will be required for this project.

_____ This is the only Materials Certification required for this project.

_____ This is the final Materials Certification required for this project. Previous certifications were sent on the dates indicated below.

Contractor	Type of Construction	Date Sent
_____	_____	_____
_____	_____	_____

APPENDIX F

Nebraska Department of Roads
Annual Report to FHWA
On
System Wide Approach of Independent Assurance Testing
National Highway System

1. Number of federal aid projects (Includes all PCC and HMA projects):

2. Number of federal aid projects with NDOR personnel performing verification sampling and testing:

3. Number of federal aid projects where consultant personnel are performing verification sampling and testing:

4. Number of federal aid projects where contractor personnel are performing QC sampling and testing and NDOR personnel are performing verification sampling and testing:

5. Number of qualified NDOR technicians performing testing on federal aid projects:

6. Number of qualified Consultant technicians performing testing on federal aid projects:

7. Number of qualified Contractor technicians performing testing on federal aid projects:

8. Number of NDOR temporary and new-hires performing testing on federal aid projects (as allowed under the NDOR QAP):

9. Number of Consultant temporary and new hires performing testing on federal aid projects (as allowed under the NDOR QAP):

10. Number of Contractor temporary and new hires performing testing on federal aid projects(as allowed under the NDOR QAP):

11. Independent Assurance reviews conducted on NDOR personnel in 20_ _:

12. Independent Assurance reviews conducted on Consultant personnel in 20_ _:

13. Independent Assurance reviews conducted on Contractor personnel in 20_ _:

Equipment Certification:
The Nebraska Department of Roads, Materials and Research Division certify that all equipment used in the testing of materials has been calibrated. This was accomplished through the NDOR Independent Assurance reviews and/or material verification testing.

Statewide Corrective Action:

*The number displayed in Box #1 will not be the total of boxes 2, 3 and 4 due to the fact that the contractor performed the QC testing on the asphalt projects, but several projects also used Portland cement concrete and this verification testing was performed by a consultant or a NDOR inspector.

** The numbers displayed in boxes 11, 12 and 13 may not closely correlate with boxes 5, 6, and 7 due to the fact that an IA review may have been done in the previous year, and/or the IA review may have been conducted on a non-federally funded project.

Signature: _____ Date:_____
Materials and Research Engineer

NEBRASKA DEPARTMENT OF ROADS
QUALITY ASSURANCE PROGRAM FOR CONSTRUCTION

APPENDIX G

CHECKLIST
ASPHALT PRODUCTION, PLACEMENT AND COMPACTION

PROJECT NO.: _____

CONTRACTOR: _____

LOCATION: _____

INSPECTION DATE(S): _____

CONTRACTOR REPRESENTATIVE: _____

PROJECT MANAGER: _____

QA MANAGER: _____

TYPE PLANT AND MANUFACTURER NAME: _____

Areas of Inspection and Discussion of Actions Agreed Upon

Asphalt Plant Site

1. Aggregate Stockpiles

1.1 Materials properly separated? Yes ☐ No ☐
Comments: _____

1.2 Materials properly stockpiled to minimize segregation? Yes ☐ No ☐
Comments: _____

1.3 Has Contractor determined the gradation of the materials being delivered? Yes ☐ No ☐
Comments: _____

1.4 Has Contractor submitted and received approval of intended material sources and Job-Mix Formula? Yes ☐ No ☐
Comments: _____

2. Liquid Asphalt Storage

2.1 Are there any special PG Binder handling procedures required?
Yes ☐ No ☐
Comments: _____

2.2 Is a sampling outlet provided in the asphalt feed lines or at a location to sample material representing material going into the mixture?
Yes ☐ No ☐
Comments: _____

2.3 Is there a procedure in place to insure no contamination of the sample.?
Yes ☐ No ☐
Comments: _____

2.4 Who is the Contractor PG Binder Sampling Technician(s) and who from the NDOR will be observing the sampling?
Names: Conntractor: _____
NDOR: _____

2.5 What are the mixing and compaction temperatures of each PG Binder being used on the project?
Compaction Temperature: _____
Mixing Temperature: _____
Comments:
_____

3. Hydrated Lime Additive System

3.1 Does the hydrated lime system meet specifications? Yes ☐ No ☐
Comments: _____

3.2 What measures are in place to control dusting of hydrated lime?
Comments: _____

4. Cold Feed System

4.1 Number of cold feed bins: _____
Comments: _____

4.2 Have cold feed gate settings been properly calibrated? Yes ☐ No ☐
Comments: _____

4.3 Have dividers been placed between bins to minimize spillover of aggregates into adjacent bins? Yes ☐ No ☐
Comments: _____

5. Thermometric Equipment

5.1 Is an armored thermometer located in the asphalt cement feed line near the discharge end at the mixer unit? Yes ☐ No ☐
Comments: _____

5.2 Is the plant equipped with a thermometer at the discharge end of the drier to measure mixture temperature?
Yes ☐ No ☐
Comments: _____

5.3 Has accuracy of thermometers been checked? Yes ☐ No ☐
Comments: _____

6. Surge Bins / Silos

6.1 Is unit assembled and secured properly to handle wind and weather extremes?
Yes ☐ No ☐
Comments: _____

6.2 Is the silo batcher fully functional and operating during production?
Yes ☐ No ☐
Comments: _____

6.3 Is conveyor system covered and insulated (if necessary) so as to prevent excessive loss of heat during transfer of material from mixing plant to storage bin? Yes ☐ No ☐
Comments: _____

6.4 Mix level in surge bin/silo between 1/3 and 2/3 of bin / silo capacity?
Yes ☐ No ☐
Comments: _____

7. Safety and Inspection Provisions

7.1 Is an unobstructed and adequately guarded passage provided and maintained in and around the truck loading space for visual inspection purposes? Yes ☐ No ☐
Comments: _____

7.2 Does plant have adequate and safe stairways or guarded ladders to plant units such as mixer platforms, control platforms, hot storage bins, asphalt storage tanks, testing laboratory, etc. where inspections are required?
Yes ☐ No ☐
Comments: _____

8. Truck Load Scales

8.1 Do scales have digital printing recorder or automatic weight printer?
Yes ☐ No ☐
Comments: _____

8.2 Have scales been checked and certified as per Contract Provisions?
Yes ☐ (date ____/____/____) No ☐
Comments: _____

9. Transportation Equipment

9.1 Are all truck bodies clean, tight, and in good condition? Yes ☐ No ☐
Comments: _____

9.2 Do trucks have tarps and insulation as required by Contract Provisions? Yes ☐ No ☐
Comments: _____

9.3 Is approved release agent available for coating truck bodies to prevent material from sticking? Yes ☐ (Record material used) No ☐
Comments: _____

10. Provisions for Testing

10.1 Does size and location of QC laboratory comply with specifications?
Yes ☐ No ☐
Comments: _____

10.2 Are Testing Technician's certifications noted in Site Manager?
Yes ☐ No ☐
Comments: _____

10.3 Is laboratory properly equipped, maintained and everything functional?
Yes ☐ No ☐
Comments: _____

10.4 Have sample locations and procedures for random sampling schedules been reviewed? Include PG Binder, mixture and FAA/CAA belt samples.
Yes ☐ No ☐
Comments: _____

<u>Lay-down Site</u>

11. Test Strip

11.1 Has Test Strip mixture production date and time been determined?
Yes ☐ No ☐
Comments: _____

11.2 Has location and lift placements been determined? Yes ☐ No ☐
Comments: _____

11.3 Does everyone understand number of and distribution of samples and the reporting of results? Yes ☐ No ☐
Comments: _____

12. Paving Equipment

12.1 Have distributor application rates, pressures, heights and angles of nozzles been properly set? Yes ☐ No ☐
Comments: _____

12.2 Have the following paver components been reviewed? Yes ☐ No ☐

12.2.1. During continuous width paving, is the dimension from end of auger (or auger extension) to end of screed is equal to or less than 18 inches?
Yes ☐ No ☐
Comments: _____

12.2.2. Screed extensions are in place and properly installed as per operator's manual?
Yes ☐ No ☐
Comments: _____

12.2.3. Have paver modifications, such as kickback paddles at center gear box, been installed to minimize segregation of mixture through the paver? Yes ☐ No ☐
Comments: _____

12.2.4. Dumping of the wings will be allowed only at times which will insure no segregated mixture through the paver?
Yes ☐ No ☐
Comments: _____

12.2.5. The vibratory screed is functioning and being used?
Yes ☐ No ☐
Comments: _____

12.2.6. If pickup machine is being used, does all windrow material get picked up?
Yes ☐ No ☐
Comments: _____

12.2.7. A procedure is in place to check for hydraulic leaks on a specified schedule? Yes ☐ No ☐
Comments: _____

13. Rollers

13.1 Discuss the number and sizes of rollers being used.
Comments: _____

13.2 Will proper frequency and amplitude settings be used as per manufacturers recommendations for mixture type and lift thickness?
Yes ☐ No ☐
Comments: _____

13.3 Have tire pressure on pneumatic rollers been checked and adjusted as required?
Yes ☐ No ☐
Comments: _____

14. Trucking Sequencing

14.1 Do the number of trucks available for mixture delivery match mixture production and paving rates? Yes ☐ No ☐
Comments: _____

14.2 Are truck box beds and sides smooth enough to allow for complete dispensing of mixture into the paver? Yes ☐ No ☐
Comments: _____

14.3 Have all trucks been checked for hydraulic leaks and corrected if needed? Yes ☐ No ☐
Comments: _____

14.4 Have truck clean out locations been established? Yes ☐ No ☐
Comments: _____

15. Visual and Measured Inspection Requirements

15.1 Discuss the importance of straight paving operations. Are acceptable deviations of less than 2 inches per Station (100 feet) being met?
Yes ☐ No ☐
Comments: _____

15.2 Longitudinal joints

15.2.1. Are construction and compaction sequences as specified in the contract being followed? Yes ☐ No ☐
Comments: _____

15.2.2. Are proper lift elevations between adjacent lifts being met?
Yes ☐ No ☐
Comments: _____

16. Continuous Operation

16.1 Is paving speed matching production and delivery to minimize stopping of the paver? Yes ☐ No ☐

Comments: _____

16.2 Discuss proper starting and stopping procedures. Is the paver stopping with enough mixture in the hopper so that conveyors are not exposed?
Yes ☐ No ☐
Comments: _____

17. Random Sampling and Testing

17.1 Review proper sampling procedure of mixture behind the paver. Have proper sampling procedures been demonstrated and being used?
Yes ☐ No ☐
Comments: _____

17.2 Review and if necessary demonstrate proper splitting procedures.
Comments: _____

17.3 Determine how NDOR QA sample is delivered to Branch Lab. Who is the individual(s) responsible for delivering the sample to the Branch Lab?
Name: _____ Title: _____

Others: _____

17.4 Review the length of time samples are retained.
Comments: _____

18. Asphalt Plant History

18.1 When did the plant arrive on the site?
Comments: _____

18.2 Where did it come from?
Comments: _____

18.3 When did the plant become operational?
Comments: _____

18.4 When did the plant begin producing material for the project?
Comments: _____

18.5 When did the plant complete producing material for the project?
Comments: _____

18.6 When did the plant leave the site?
Comments: _____

18.7 Where did the plant go?
Comments: _____

Distribution:

- Project Manager
- QA Manager
- Contractor

NEBRASKA DEPARTMENT OF ROADS

Policies

Materials Sampling Guide, Section 29

Page 29-A

June 25, 2009

Policy for Precast/Prestressed Concrete Plant Inspection NDOR Inspector

Required Certification: ACI Field Test Technician Grade 1; NDOR Field Technician; NDOR Plant Technician; PCI Quality Control Personnel Certification Level 1 & 2

Recommended Certification: ACI Strength Test Technician Grade 1

General: Refer to Section 705 in the 2007 Standard Specification for Highways, and all Supplements to the Standard Specifications.

Each inspector is expected to perform any or all tasks within the non-administrative area of prestressed concrete inspection and control. NDOR inspectors may observe and/or verify their assigned tasks. Production tasks may continue even though an NDOR inspector is not present to observe the task, provided the production schedule has been given to the NDOR inspector and the work is proceeding according to schedule. The definition of "Verify" is that NDOR inspectors will review Plant inspectors written documentation of the task or perform separate tests. All inspectors shall obtain the required certification and should obtain the recommended certification.

Inspectors shall comply with all of the safety programs prescribed by the facility. All personnel are required to wear safety hard hats, safety footwear and safety glasses while observing and/or verifying the work in the production area.

I. One sample of prestress strand twelve feet long from each reel shall be submitted to Materials and Research for testing 30 days before the anticipated time of use. (Sampling Guide, 705.02 paragraph 14)

II. Inspection and recording of tensioning.

   A. The NDOR inspector shall observe and/or verify the tensioning of all strands.

   B. A small number of broken wires are acceptable in a setup as long as the number is limited to not more than 2%.

      1. The area of broken wires shall not exceed 2% of the cross sectional area of the stressing strand.

      2. No more than 1 broken wire will be allowed in a single strand. (705.02 paragraphs 10 & 12)

GENERAL (CONT'D):

III. Checking of dimensions of members, numbers, size and positions of tendons, reinforcing steel, other incorporated materials, opening, blockouts, etc.

A. After the Plant inspector has notified NDOR inspector the bed is ready to be reviewed the NDOR inspector may observe and/or verify the bed.

B. All reinforcing steel shall be observed or verified to ensure the bars are of the correct type and size and have been placed in the proper location.

C. The type, size, anchorage and location of all embedded items shall be observed and/or verified.

D. The NDOR inspector should perform checks as needed to verify the quality control department data.

IV. Regular inspection of batching, mixing, conveying, placing, compacting, finishing and curing of concrete.

A. Precast/Prestressed Portland cement concrete production facilities shall comply with the requirements in the Precast/Prestressed Concrete Institute (PCI) for certified plants.

1. Whenever there is reason to suspect a problem with the equipment, any or all of the equipment may be inspected.

B. Precast plants that are not PCI certified will be NRMCA certified.

V. Preparation of concrete specimens for strength testing and performance of concrete tests (slump, air content, unit weight, etc.).

A. Concrete testing verification shall be the responsibility of the NDOR inspector. Table 705.03 shows the minimum required sampling and testing, the Engineer may make more correlation test samples if the quality of the plants testing is deemed inadequate.

B. The NDOR inspector shall observe and/or verify the sampling, fabrication and testing for all specimens.

GENERAL (CONT'D):

VI. Inspection of detensioning, product removal from beds, handling and storing operations.

A. The NDOR inspector shall observe and/or verify the detensioning.

1. Detensioning shall be accomplished before the temperatures of the units drop more than 60 degrees from the mximum cure strength temperature and while they are still moist. (705.03, 9)

2. After Detensioning prestressed concrete girder shall be inspected for cracking. If any cracks are discovered in the middle of the girder on the bottom flange face, the girder shall be rejected. (703.03,9.9.C)

B. Verifying of dimensions of members, camber, numbers, opening, blockouts, etc.

1. The quality control department shall notify the NDOR inspector when the product is ready to be reviewed.

2. The NDOR inspector may perform checks to verify the quality control department data.

C. Each precast/prestressed concrete structural unit shall be stamped or marked with an identification number and its manufacture date. (705.03 paragraph 8.10.g)

D. Initial camber should be recorded on all prestressed concrete products for which cylinders are made and initial camber measurement is appropriate.

E. Visual inspection of the product for strand slippage should be monitored and evaluated. If slippage occurs, the Construction Division shall be notified and the girder will be evaluated.

VII. Final inspection of finished product prior to shipment.

A. Verified the product has been marked with a number and date related to shop drawings and product records for accurate identification. Green label is placed on end of girder for final approval.

B. Visual inspection of the product for general appearance should be made. Cracking is frequently indicative of incorrect procedures in design, production, or handling.

C. The NDOR inspector shall observe and/or verify the post-pour inspection.

VIII. General observation of plant equipment, working conditions, weather and other items, which have the potential for affecting the products.

IX. All products sent to state projects shall be accompanied by a shipping ticket. The NDOR inspector will be given the opportunity to perform a final inspection before it leaves the plant.

Precast/Prestress Inspection Records and Reports

The filing pattern outlined below has been devised to ensure the integrity and uniformity of files kept in the inspector's plant file. It is expected that all such files will be kept in order and up to date.

I. Correspondence File material shall be filed by date with current data at the front of the file and cross referenced by date of letter, date received, person receiving, also those acting upon correspondence.

   A. State of Nebraska

   B. Producer

   C. Miscellaneous

II. Materials and Tests Section

   A. Field Gradations

      1. Fine Aggregate
      2. Coarse Aggregate

   B. Sampling Identification material shall be filed by date/report number (Certifications are filed with report.)

      1. Fine Aggregate
      2. Coarse Aggregate
      3. Portland Cement
      4. Admixtures
      5. Prestressed Strand
      6. Concrete Reinforcing Steel
      7. Cold Rolled Steel
      8. Welded Steel Wire Fabric
      9. Neoprene Bearing Pads
      10. Miscellaneous

Precast/Prestress Inspection Records and Reports (cont'd)

III. Materials and Research shall be sent reports on a regular basis and shall include:

A. Compressive Strength and Stress/Strain Data

1. Project Number if known
2. Unit Identification from plans
3. Date Fabricated
4. Proportioning Report Number
5. Test Date
6. Maximum Machine Load
7. Compressive Strength
8. Stress/ Strain Data

B. Shipping Report

1. Project Number
2. Unit Identification from plans
3. Date Fabricated
4. Date Shipped
5. Length of each Pile

NDOR Inspector Checklist for Steam Curing

I. Verify temperature sensor or thermometer locations.

   A. One approved continuous recording thermometer or sensor for each 115 feet of casting bed, with a minimum of 2 thermometers or sensors located in each enclosure.

II. Verify that steam jets are not directed at the forms.

III. Anything that causes the forms to heat up at a faster rate than the concrete can cause problems.

   A. Verify that the temperature of the concrete is maintained near placement temperature until the concrete has reached initial set.

   B. Verify that the temperature rate of rise does not exceed 60°F per hour after initial set.

   C. Verify that the temperature did not exceed 175°F.

IV. Verify that the relative humidity inside the enclosure is maintained between 70% and 100%.

V. Verify that the temperature in the concrete is maintained so that the difference between highest and lowest temperature station readings will not be more than 30°F.

   A. A dial thermometer pushed through the holes in the tarp works well for checking the temperature along the unit(s).

   B. There must be adequate room, 3 inches minimum, for the steam to circulate all the way around the forms.

   C. Wind can blow the tarps against the forms and completely stop the steam from circulating around the units.

   D. Make sure the end of the bed is well protected and that there is as much steam getting to the ends as the rest of the bed.

   E. Wind blowing in the end of the bed can drastically reduce the temperature.

Elongation Instructions

Elongation shall follow the recommended practice of the Precast/Prestressed Concrete Institute except as out lined below or stated on the plans. The plant inspector shall preform elongation calculations with a report submitted to the NDOR inspector for verification.

I. Calculate the elongations using the equation on page 36 of the PCI Quality Control Technician/Inspector Training Manual.

   A. The Central Laboratory shall determine the Modulus of Elasticity.

   B. Initial Tension should be from 5% to 25% of the final load, to pull the slack strand taut.

   C. Strands are tensioned to approximately 70% of their ultimate capacity, except where the plans indicate otherwise.

   D. Tolerance based on the PCI Quality Control Manual is ± 5% from the desired value. This relates to the actual gage pressure and elongation verses the calculated values of each. It also relates to an algebraic comparison of the variation of the gage pressure to variations in elongations.

II. Tensioning Corrections for elongation and load are:

   A. Strand Seating

      1. Dead End Seating

      2. Live End Seating

      3. Splice Chuck Seating

   B. Bed Shortening for self-stressing beds

   C. Abutment Rotation of movement of anchorages for fixed abutment beds

   D. Elongation of abutment anchor rods

   E. Thermal Effects

   F. Drape

ELONGATION WORKSHEET

PROJECT:_____ POUR ID.: _____

STATION: _____ DATE ELONGATED:_____

BED: _____ TIME ELONGATED: _____

Theoretical Elongation: $E_T = (P \times L) / (A \times E)$

Where: P = Load Applied to Strand = $P_f - P_i$ A = Area of Strand
L = Length of Strand Between Anchorages E = Modulus of Elasticity of Strand

The Physical Tests Laboratory shall determine the modulus of elasticity and area of strand.

Load Corrections

If draped strand are used, the applied load shall be corrected because the draping process will add load.

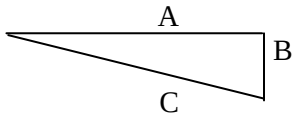

Change in elongation for draping $E_d = C - A$ $C=\sqrt{A^2+B^2}$

A correction for temperature will be made if the temperature increases 25°F or more from the time of stressing to the time of initial set.

Δ Elongation $E_t = 0.0000065 \times T_\Delta \times L \times 12$ Corrected Load $P_t = (1+ E_\Delta / E_T) \times P \leq$ % Ultimate Strength

Corrected Elongation $E_C = E_T + E_t - E_d$ Target Load $P_T = (E_C \times A \times E) / L$

1-8

Elongation Corrections

Strand Seating = S = Dead End + Live End + Splice Chuck

Bed Shortening = B

Abutment Rotation, or Anchorage Movement = R

Elongation of Abutment Anchor Rods = A

Final Theoretical Elongation: $E_F = E_c + S + B + R + A$

Strand Load / Elongation Table

Strand	Load			Elongation		
Location	High	Actual	Low	High	Actual	Low

Computed By: _____ Verified By: _____
(Plant Inspector) *(NDOR Inspector)*

ELONGATION AND LOAD CORRECTIONS

Initial Load: _____ P_i **Final Load:** _____ P_f **Applied Load:** _____ **P**

Elongation: _____ **E** **Temp. @ Elongation:** _____ T_E **Concrete Temp:** _____ T_C

Difference $T_C - T_E$ = _____ T_Δ **Corrected Elongation:** _____ E_C **Corrected Load:** _____ P_C

Strand	**Elongation Correction**					**Final Theoretical**	
Location	Strand Seating	Bed Shortening	Rotation/Movement	Anchor Rods	Drape Strand	Elongation	Load

Computed By: _____ *(Plant Inspector)* Verified By: _____ *(NDOR Inspector)*

Policy for Precast/Prestressed Concrete Plant Inspection Fabricator Inspector

Required Certification: ACI Field Test Technician Grade 1; NDOR Field Technician; NDOR Plant Technician; PCI Quality Control Personnel Certification Level 1 & 2

Recommended Certification: ACI Strength Test Technician Grade 1

General: Refer to Section 705 in the 2007 Standard Specification for Highways, and all Supplements to the Standard Specifications.

Each inspector is expected to perform any or all tasks within the non-administrative area of prestressed concrete inspection and control. Thus all inspectors shall obtain the required certification and should obtain the recommended certification.

I. Identification, examination, acceptance and plant testing of materials and subassemblies.

A. All precast/prestressed concrete structural units shall be produced in a Precast/Prestressed Concrete Institute (PCI) certified plant.

B. The contractor shall provide the NDOR inspector a 4-week productions schedule that is updated as necessary. If the NDOR inspector is given less than 1 NDR workdays notice of a schedule change, then the fabricator may not precede until the Engineer has reviewed the change. The Engineer may observe any or all of the procedures and shall have access to all reported data at any time during fabrication. The NDOR inspector shall report any inconsistencies to the job superintendent and note them in the plant diary. (705.03 paragraph 5)

C. Quality control records should be identified with the same job number, piece number, and project number if known and other information as used to identify the product after inspection.

D. One sample of prestress strand twelve feet long from each reel shall be submitted to the NDOR inspector for testing 30 days before the anticipated time of use. (Sampling Guide,705.02 paragraph 14)

II. Inspection and recording of tensioning.

A. Tensioning of all strands shall be done in the presence of the NDOR inspector.

B. A small number of broken wires are acceptable in a setup as long as the number is limited to not more than 2%.

1. The area of broken wires shall not exceed 2% of the cross sectional area of the stressing strand.

2. No more than 1 broken wire will be allowed in a single strand. (705.02 paragraphs 10 & 12)

III. Inspection of beds and forms prior to concreting.

A. One of the most important inspections functions is the prepour inspection. It is much easier to make corrections before concrete is placed.

GENERAL (CONT'D):

B. The overall length, width, thickness, and other basic dimensions should be checked on all sides of the form before concrete placement begins.

IV. Checking of dimensions of members, numbers, size and positions of tendons, reinforcing steel, other incorporated materials, opening, blockouts, etc.

A. The quality control department shall notify the NDOR inspector when a set-up is ready to be reviewed.

B. All reinforcing steel shall be reviewed to ensure the bars are of the correct type and size and have been placed in the proper location.

C. The type, size, anchorage and location of all embedded items shall be checked.

D. The NDOR inspector may occasionally perform checks to verify the quality control department data.

V. Regular inspection of batching, mixing, conveying, placing, compacting, finishing and curing of concrete.

A. Precast/Prestressed Portland cement concrete production facilities shall comply with the requirements in the Precast/Prestressed Concrete Institute (PCI) for certified ready mix plants.

1. Whenever there is reason to suspect a problem with the equipment, any or all of the equipment may be inspected.

B. Precast plants that are not PCI certified will be NRMCA certified

VI. Preparation of concrete specimens for strength testing and performance of concrete tests (slump, air content, unit weight, etc.).

A. Concrete quality control shall be the responsibility of the Contractor. Concrete shall be sampled and tested as shown in Table 705.03.

VII. Inspection of detensioning, product removal from beds, handling and storing operations.

A. Detensioning shall be done in the presence of the NDOR inspector.

1. Detensioning shall be accomplished before the temperatures of the units drop more than 60 degrees from the peak cure strength temperature and while they are still moist. (705.03 paragraph 9.b.(9))

2. After Detensioning prestressed concrete girder shall be inspected for cracking. If any cracks are discovered between quarter points in the middle of the girder on the bottom flange face, the girder shall be rejected. 703.03,9.9.C)

B. Verifying of dimensions of members, camber, numbers, opening, block outs, etc.

1. The quality control department shall notify the NDOR inspector when the product is ready to be reviewed.

2. The NDOR inspector may occasionally perform checks to verify the quality control department data.

General (cont'd):

C. Before products are moved into storage, the NDOR inspector shall evaluate the product for deficiencies. This may be done while in the storage area if the NDOR inspector has complete access to the product.

D. To identify the condition of a product as it moves through plant operations, paint marks shall be placed on the ends of the girders by the NDOR inspector.

1. Products marked with red paint are to identify reject items.
2. Products marked with yellow paint should have their defects evaluated and repaired. Once the repair is complete and accepted, the yellow paint is covered with green paint.
3. Products marked with green paint are approved for shipment at the appropriate time.

E. Each precast/prestressed concrete structural unit shall be stamped or marked with an identification number and its manufacture date, by the NDOR inspector. (705.03 paragraph 8.10.g)

F. Initial camber should be recorded on all prestressed concrete products for which cylinders are made and initial camber measurement is appropriate.

G. Visual inspection of the product for strand slippage should be monitored and evaluated. If slippage occurs, the Construction Division shall be notified and the girder will be evaluated.

VIII. Final inspection of finished product prior to shipment, by NDOR inspector.

A. Verified the product has been marked with a number and date related to shop drawings and product records for accurate identification. Green label is placed on end of girder for final approval.

B. Visual inspection of the product for general appearance should be made. Cracking is frequently indicative of incorrect procedures in design, production, or handling.

IX. General observation of plant equipment, working conditions, weather and other items, which have the potential for affecting the products.

X. All products sent to state projects shall be accompanied by a shipping ticket. The NDOR inspector shall confirm the shipment before it leaves the plant.

Elongation Instructions

Elongation shall follow the recommended practice of the Precast/Prestressed Concrete Institute except as out lined below or stated on the plans. Elongation calculations shall be preformed by the plant inspector with a report submitted to the NDOR inspector for verification.

I. Calculate the elongations using the equation on page 36 of the PCI Quality Control Technician/Inspector Training Manual.

   A. The Modulus of Elasticity shall be determined by the Central Laboratory.

   B. Initial Tension should be from 5% to 25% of the final load, to pull the slack strand taut.

   C. Strands are tensioned to approximately 70% of their ultimate capacity, except where the plans indicate otherwise.

   D. Tolerance based on the PCI Quality Control Manual is ± 5% from the desired value. This relates to the actual gage pressure and elongation verses the calculated values of each. It also relates to an algebraic comparison of the variation of the gage pressure to variations in elongations.

II. Tensioning Corrections for elongation and load are:

   A. Strand Seating

      1. Dead End Seating

      2. Live End Seating

      3. Splice Chuck Seating

   B. Bed Shortening for self-stressing beds

   C. Abutment Rotation of movement of anchorages for fixed abutment beds

   D. Elongation of abutment anchor rods

   E. Thermal Effects

   F. Drape

ELONGATION WORKSHEET

PROJECT:_____ POUR ID.: _____

STATION:_____ DATE ELONGATED:_____

BED: _____ TIME ELONGATED: _____

Theoretical Elongation: $E_T = (P \times L) / (A \times E)$

Where: P = Load Applied to Strand = $P_f - P_i$ A = Area of Strand
L = Length of Strand between Anchorages E = Modulus of Elasticity of Strand

The Physical Tests Laboratory shall determine the modulus of elasticity and area of strand.

Load Corrections

If draped strand are used, the applied load shall be corrected because the draping process will add load.

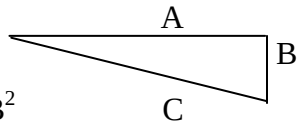

Change in elongation for draping $E_d = C - A$ $C=\sqrt{A^2+B^2}$

A correction for temperature will be made if the temperature increases 25°F or more from the time of stressing to the time of initial set.

Δ Elongation $E_t = 0.0000065 \times T_\Delta \times L \times 12$ Corrected Load $P_t = (1+ E_\Delta / E_T) \times P \leq$ % Ultimate Strength

Corrected Elongation $E_C = E_T + E_t - E_d$ Target Load $P_T = (E_C \times A \times E) / L$

Elongation Corrections

Strand Seating = S = Dead End + Live End + Splice Chuck

Bed Shortening = B

Abutment Rotation, or Anchorage Movement = R

Elongation of Abutment Anchor Rods = A

Final Theoretical Elongation: $E_F = E_c + S + B + R + A$

Strand Load / Elongation Table

Strand	Load			Elongation		
Location	High	Actual	Low	High	Actual	Low

Computed By:_____ Verified By:_____ Verified By:
(Plant Inspector) *(NDOR Inspector)*

Elongation and Load Corrections

Initial Load: _____ P_i **Final Load:** _____ P_f **Applied Load:** _____ **P**

Elongation: _____ **E** **Temp. @ Elongation:** _____ T_E **Concrete Temp:** _____ T_C

Difference $T_C - T_E =$ _____ T_Δ **Corrected Elongation:** _____ E_C **Corrected Load:** _____ P_C

Strand	**Elongation Correction**					**Final Theoretical**	
Location	Strand Seating	Bed Shortening	Rotation/Movement	Anchor Rods	Drape Strand	Elongation	Load

Computed By: _____
(Plant Inspector)

Verified By: _____
(NDOR Inspector)

Policy for Grooming and Repair Procedures Precast/Prestressed Concrete Products

* Prior to contractor beginning with any non-standard repair work, a NDOR inspector will review any grooming or repair work.

* In this document, when the word manual is used, it is referring to the manual for the Evaluation and Repair of Precast, Prestressed Concrete Bridge Products-Precast/Prestressed Concrete Institute (PCI)-Div.03 Concrete-030140.

Standard imperfections require grooming and/or repairs include:

1. Cracks less than 0.012 inches (0.30 mm) in width caused by design parameters or standard practices (such as diagonal cracking at the end of girders caused by prestress forces).
2. Spalls that do not expose reinforcement.
3. Irregular top surface finish textures.
4. Honeycombing less than ½ inches in depth and greater than 12 square inches, will require repair according to the manual.
5. Minor air voids about ½ inches in depth and greater than 12 square inches, will require repair according to the manual.
6. Pour lines that show no indication of de-bonding or cold jointing nothing needs to be done.

Non-Standard imperfections include:

1. Refer to the PCI's Manual
2. Anything not covered by the PCI's manual shall be approved by the Engineer.

Non-Standard Repair may commence upon the following:

1. The NDOR inspector(s) notify Contractor QC personnel of existing Non-Standard imperfections. (Or Contractor QC personnel notify NDOR inspector(s) of Non-Standard imperfections.)
2. Contractor will perform the repairs according to the PCI's manual
3. If contractor wants to modify the procedures found in the PCI's manual, must submit a request to Construction Division and Inspector in writing. Approval must be made prior to the beginning of any work.
4. Construction Division will approve in writing via email the submitted procedure or modification to the procedure after consulting Bridge Division.

ACCEPTANCE POLICY FOR CEMENT & BLENDED CEMENTS

GENERAL:

These instructions cover the acceptance procedures for Portland and blended cements supplied for use in Nebraska State Highway construction and maintenance.

The State of Nebraska Standard Specifications, Supplemental Specifications, and Materials Sampling Guide for Highway Construction are a part of these instructions. This requirement includes all shipments by rail, truck, or barge supplied directly to contractors through suppliers or ready mix plants.

CERTIFIED MILL ANALYSIS:

Portland and interground/blended cements mills are required to furnish the Materials and Research Division a copy of their certified mill analysis each time the cement produced for use in Nebraska Department of Roads (NDOR) projects. The certified mill analysis report shall include the location of the mill, brand name, type of cement, grinding period, and the results of the physical and chemical tests determined according to ASTM C-150 (Standard Specification for Cement) or C-595 (Standard Specification for Blended Hydraulic Cements).

APPROVED PRODUCTS LIST:

Portland and interground/blended cements on the NDOR's Approved Products list can be used on the project when accompanied by a manufacturer's certification. The requirements for being on the NDOR's Approved Products list approval are:

1. Twenty consecutive passing mill samples, composed of five samples each from four separate grinds or blends, tested at the NDOR central laboratory (Chem. Lab and PCC Lab). The five samples should be obtained throughout the period of the grind or blend.
2. The mill analysis and the NDOR test results for the twenty consecutive passing samples shall conform to one of the following:
   a. Portland cement shall conform to ASTM C 150
      1) Tricalcium aluminate (C_3A) cannot exceed 8% if the cement is to qualify as a type II.
      2) There is no C_3A limit for type I cement.
   b. Total cementitious material replacement shall conform to the following:
      1) Interground/blended cements shall conform to ASTM C 595 and ASTM C 1567 specifications with expansion less than 0.10% at 28 days. To accommodate precision within multi-laboratory testing, expansion up to and including 0.13% will be accepted for use. If the expansion is above 0.13%, the material will be rejected.
         i. Pozzolan Class F fly ash shall be 25 $\pm$ 2 percent.
         ii. The combination of 20% $\pm$ 2 of Pozzolan Class F fly ash and 20% $\pm$ 2 of Ground Granulated Blast Furnace Slag (GGBFS).
         iii. 100% Platte River Gravel source will be used to make and test mortar bars according to the provisions of ASTM C 1567.

3. If the monthly mill sample, or any field sample, is out of tolerance, the mill will be notified by the Portland Cement Concrete Engineer. If a chemical test is out of tolerance, a check sample will be re-tested using ASTM C 114 as the referee method.

APPROVED PRODUCTS LIST (CONT'D):

4. If tolerance problems are not corrected within 30 days following notification, the cement in question will be removed from NDOR Approved Products List.
5. With the approval of the Portland Cement Concrete Engineer, conditions for acceptance may also be met by furnishing test data from another state highway department provided the test were conducted within one year of application date.

MILL SAMPLING PROCEDURE:

The sampling procedure requirement for cements is one 10-lb sample. The sample shall be taken on the first production day of each month for each type produced. The sample will be a composite of that day's production. Each Sample will be shipped in a leak and moisture resistant container, and will be identified with the location and name of the production mill, type of cement, date produced, and storage bin number. The accompanying paperwork, including the mill analysis shall be for the sample being submitted to NDOR, and placed in a sealed envelope.

MILL SAMPLE SHIPPING:

The samples are to be shipped to the NDOR Materials & Research facility at one of the addresses below. The producer will be responsible for the cost of shipping.

WHEN USING THE U.S POST SERVICE:
Portland Cement Concrete Laboratory
Nebraska Department of Roads
Materials and Research Division
P.O Box 94759
Lincoln, Nebraska 68509-4759

WHEN USING UPS:
Portland Cement Concrete Laboratory
Nebraska Department of Roads
Materials and Research Division
1400 Nebraska Highway 2
Lincoln, Nebraska 68509-4759

CERTIFICATES OF COMPLIANCE:

Certificates of Compliance shall be issued by the producing mills. Copies of the certificates must accompany each load from a terminal. The forms must include the following:

Name and Location of the producing cement mill
Consignee and destination of the shipment
Date shipped from the producing mill (not the date shipped from the terminal)
Railroad car or truck identification number
Brand and type of cement
Quantity of cement shipped
Certified test number, date, and bin or silo number

Each form for a truck shipment must include a non-repeated order number or identification number. The following signed certification statement or similar wording must also be included on the form.

This is to certify that this shipment of cement was taken from the bin indicated and that it meets the specification requirements of the Nebraska Department of Roads.

This certification must be signed at the mill loading site or at the terminal location. When cement is shipped from a terminal, a copy of the mill certification must accompany the load. The actual quantity shipped to a ready mix plant or job-site must be shown on the certification.

SAMPLING FROM RAILROAD CAR OR TRUCK:

Obtain samples of cement using a probe sampler (Figure 1). It shall be between 5 and 6 feet long and approximately 1 $^{3}/_{8}$ inch in outside diameter and consist of two polished brass telescopic tubes with registering slots that are opened or closed by rotation of the inner tube, the outer tube being provided with a sharp point to facilitate penetration. Take samples from well-distributed points and various depths of the cement so that the samples taken will represent the cement produced.

Figure1.- Probe Sampler for Bulk Cement

PROTECTION OF SAMPLES:

Place samples directly in moisture-proof airtight containers to avoid moisture absorption. A 10 pound sample could be placed in an one gallon metal container in water proof bags. After placing the material in a moisture proof container, it shall be immediately sealed.

To establish procedures for inspecting, sampling, and accepting Portland and blended cements, the Materials & Research Division has established the following flow charts to represent the procedures for the acceptance policy of Portland and blended cements

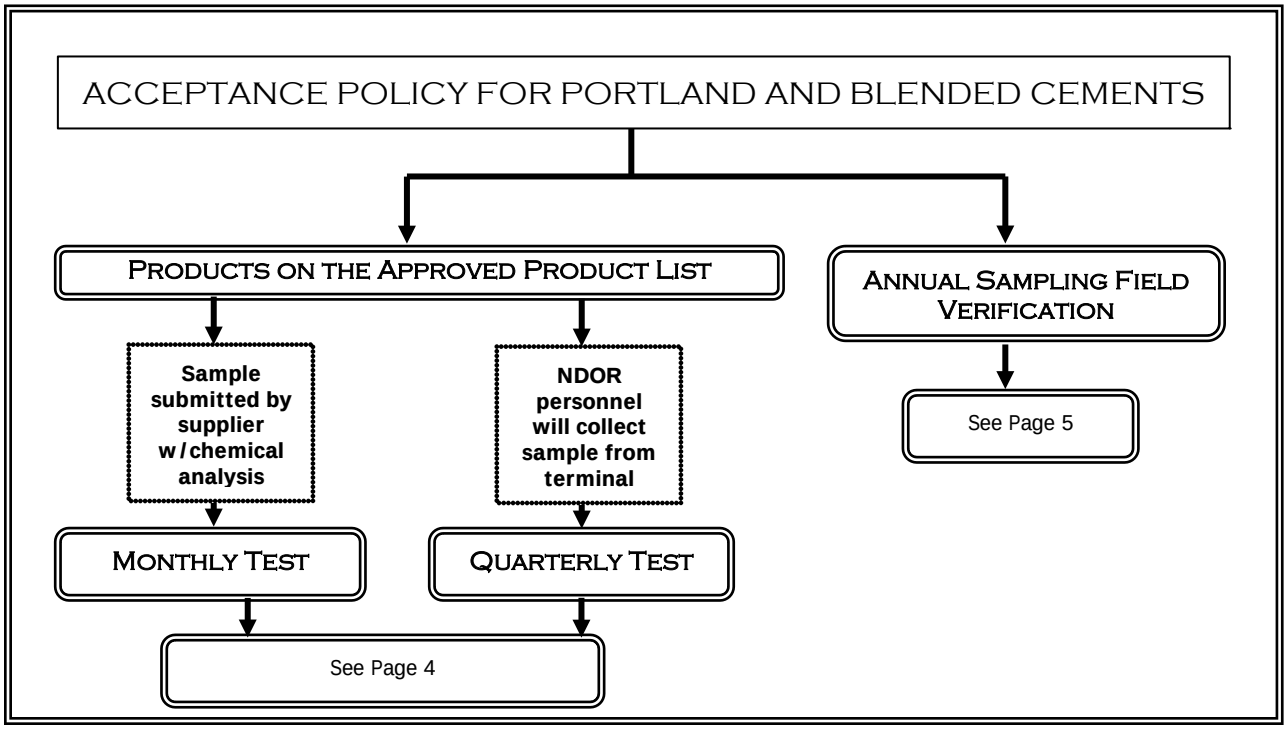

ACCEPTANCE POLICY FOR PORTLAND AND BLENDED CEMENTS

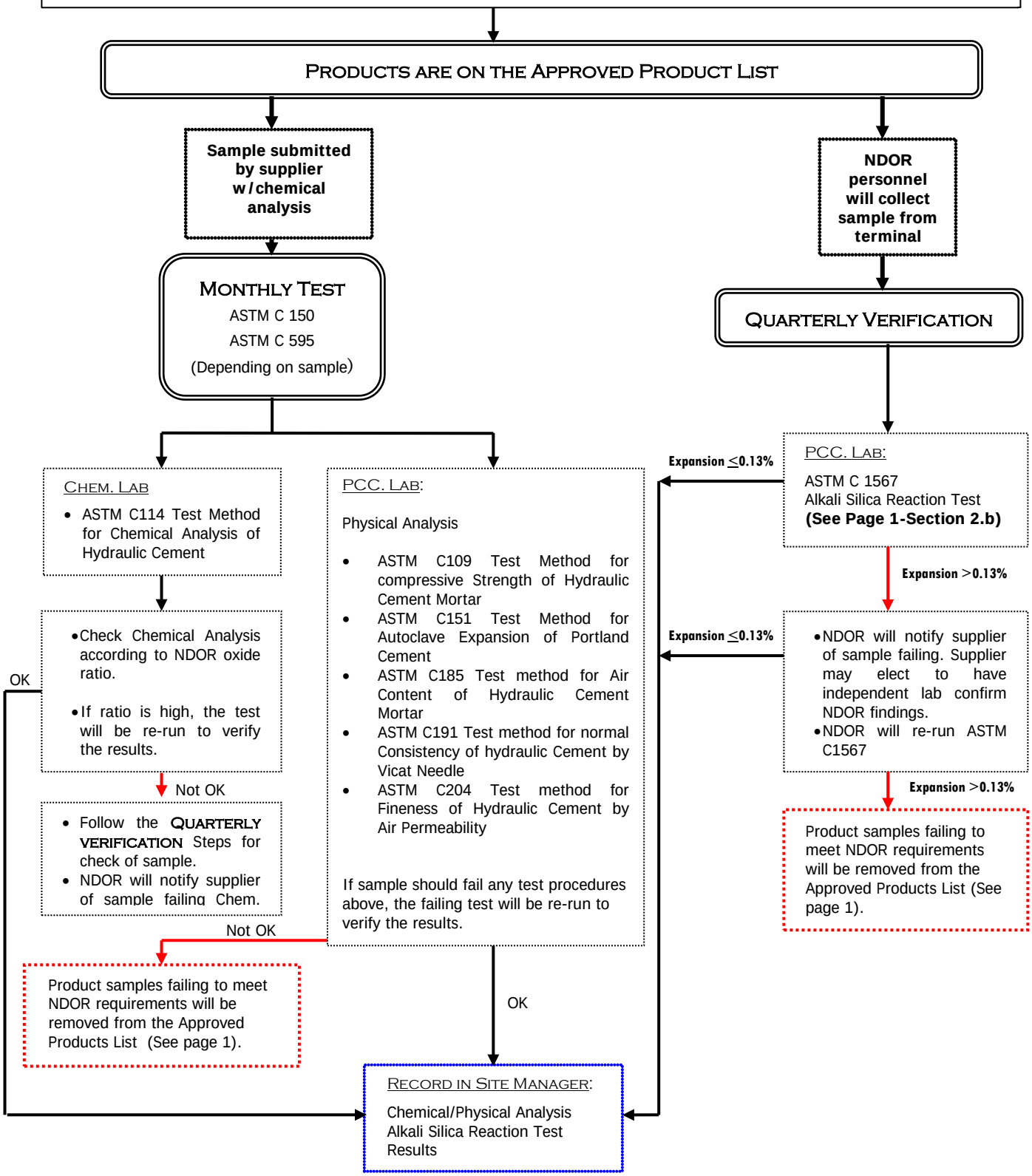

ACCEPTANCE POLICY FOR PORTLAND AND BLENDED CEMENTS

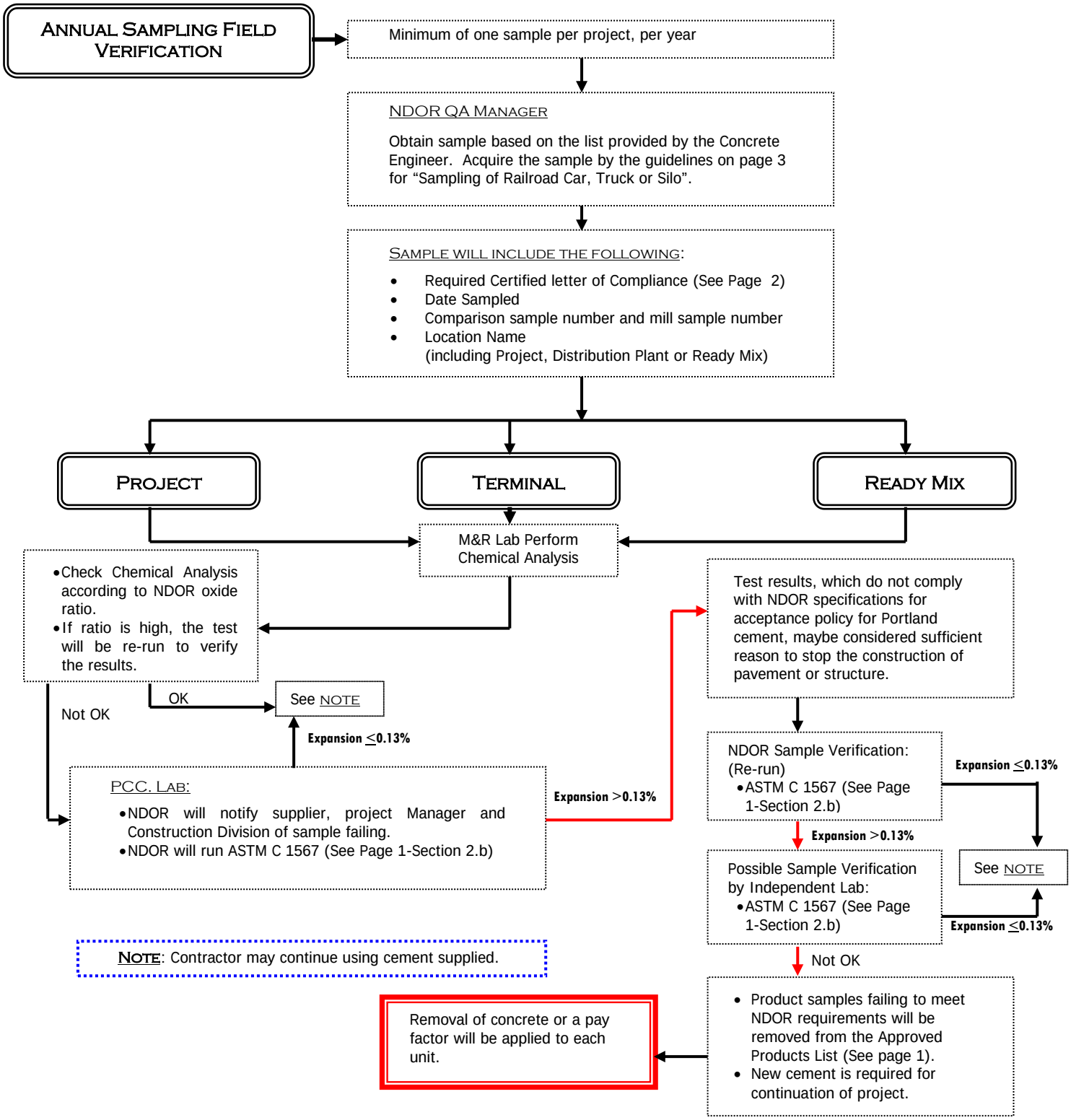

ACCEPTANCE POLICY FOR FLY ASH

GENERAL:

These instructions cover the acceptance procedures for all fly ash used in Portland cement concrete supplied for Nebraska State Highway construction and maintenance projects.

The State of Nebraska Standard Specifications, Supplemental Specifications, and Materials Sampling Guide for Highway Construction are a part of these instructions. Fly ash shall comply with Section 1008 of the Standard Specifications and Special Provisions for any specific project. This requirement includes all shipments by rail, truck, or barge supplied directly to contractors through jobbers or ready-mix plants.

CERTIFIED MILL ANALYSIS:

Fly ash producers are required to furnish the Materials and Research Division a copy of their certified mill analysis each time the fly ash produced may be shipped for use in a Nebraska Department of Roads (NDR) project. The certified mill analysis report shall include:

- name of the supplier
- source
- consignee and destination of the shipment
- project number if available
- date shipped
- railroad car or truck identification number
- weight of the shipment
- certified test number representing the material being shipped
- non-repeated order number or other identification number that will separately identify each shipment.

APPROVED PRODUCTS LIST:

Fly ashes on the NDR Approved Products List can be used when specified within the special provisions. When received on the project the material shall be accompanied by the supplier's certification. The requirements for approval are:

1. Twenty consecutive passing samples composed of five samples each representing at least one day's production, but not less than 100 tons each, tested at the NDR central laboratory. The five samples shall be obtained in a manner that will represent the entire production period.

2. Approved sources must submit composite samples representing each month's production to the NDR central laboratory for analysis prior to shipment. The fly ash shall be sampled and tested in accordance with ASTM C-618. Each sample shall consist of at least 10 pounds of fly ash.

APPROVED PRODUCTS LIST (CONT'D):

3. If the monthly sample or any field sample is out of tolerance, the supplier shall be notified by the Concrete Materials Engineer. Shipments may not resume until the fly ash is found to be in compliance with the specifications when tested by the Materials and Tests central laboratory.

4. Fly ash in storage over 90 days must be sampled, tested by NDR, and approved prior to shipment. The samples will be considered grab samples and will consist of one 10 pound grab sample for each 400 tons of fly ash. Authorization for shipment will be given if the fly ash may be used in portland cement concrete.

5. If a producer requires testing more often than once per month to maintain shipments, samples may be tested at a certified commercial laboratory, at the producer's expense, and the results sent to Materials and Tests. The test results must be received by Materials and Tests prior to shipment of the fly ash.

PLANT SAMPLING PROCEDURE:

The sampling procedure requirement for fly ashes is one (1) sample for each month's production. The sample will be a composite of five samples taken from different locations so that the entire month's production is represented.

Each sample will be shipped in a leak and moisture resistant container, and will be identified with the location and name of the producing plant, type of fly ash, and the date or dates of sampling. Grab samples shall be labeled as such.

The samples are to be shipped to the NDR at one of the addresses below. The producer will be responsible for the cost of shipping.

WHEN USING THE U. S. POSTAL SERVICE

Portland Cement Concrete Laboratory
Nebraska Dept. of Roads
Materials an Tests Division
P. O. Box 94759
Lincoln, NE 68502

WHEN USING UPS

Portland Cement Concrete Laboratory
Nebraska Dept. of Roads
Materials and Tests Division
1400 Nebraska Highway 2
Lincoln NE 68502

These guidelines must be strictly followed. If there is any reason this policy cannot be adhered to, contact the Concrete Materials Engineer at 402-479-4677.

CERTIFICATES OF COMPLIANCE:

Certificates of compliance shall be issued by the producing plants. Copies of the certificates must accompany each load from a terminal. The forms must include the following:

Name and location of the producing mill
Consignee and destination of the shipment
Date shipped from the producing mill (not the date shipped from the terminal)
Railroad car or truck identification number
Type of fly ash
Quantity of fly ash shipped
Certified test number, date, and bin or silo number

Each form for a truck shipment must include a non-repeated order number or identification number. The following signed certification statement or similar wording must also be included on the form.

> This is to certify that this shipment of fly ash was taken from the bin indicated and that it meets the specifications of the Nebraska Department of Roads.
>
> Signed_____
> For_____

The plant or terminal will send two shipment identification and certification of compliance forms with each shipment. The concrete producer will retain one copy of the certificate of compliance for their records and one will be collected by a state inspector if necessary.

Shipments of fly ash may be randomly sampled by NDR personnel, as directed by the Materials and Tests Division, and tested at the central laboratory in Lincoln.

Acceptance Policy for Ground Granulated Blast Furnace Slag (GGBFS)

General:

These instructions cover the acceptance procedures for all ground granulated blast furnace slag (GGBFS) used in Portland cement concrete supplied for use in Nebraska State Highway construction and maintenance.

The State of Nebraska Standard Specifications, Supplemental Specifications, and Materials Sampling Guide for Highway Construction are a part of these instructions. The ground granulated blast furnace slag shall comply with the Special Provisions. This requirement includes all shipments by rail, truck, or barge supplied directly to contractors through small suppliers or ready mix plants.

Certified Mill Analysis:

Ground granulated blast furnace slag producers are required to furnish the Materials and Research Division a copy of their certified mill analysis each time the ground granulated blast furnace slag produced may be shipped for use in a Nebraska Department of Roads (NDOR) project. The certified mill analysis report shall include:

- Name of the supplier
- Source
- Consignee and destination of the shipment
- Project number if available
- Date shipped
- Railroad car or truck identification number
- Weight of the shipment
- Certified test number representing the material being shipped
- Non-repeated order number or other identification number that will separately identify each shipment.

Approved Products List:

The ground granulated blast furnace slag on the NDOR's Approved Products List can be used when received on the project and accompanied by a supplier's certification. The requirements for approval are:

1. Twenty consecutive passing samples composed of five samples each representing at least one day's production, but not less than 100 tons each, tested at the NDOR central laboratory (Chem. Lab and PCC Lab). The five samples shall be obtained in a manner that will represent the entire production period.

APPROVED PRODUCTS LIST (CONT'D):

2. Approved sources must submit composite samples representing each month's production to the NDOR central laboratory (Chem. Lab and PCC Lab). The ground granulated blast furnace slag shall be sampled and tested in accordance with ASTM C-989 (Standard Specification for GGBFS), Grade 120. Each sample shall consist of at least 10 pounds of ground granulated blast furnace slag.

3. If the monthly sample or any field sample is out of tolerance, the supplier shall be notified by the Pavement Cement Concrete Engineer. Shipments may not resume until the Ground granulated blast furnace slag fis found to be in compliance with the specifications when tested by the Materials and Research central laboratory (Chem. Lab and PCC Lab).

4. If a producer requires testing more often than once per month to maintain shipments, samples may be tested at a certified commercial laboratory, at the producer's expense, and the results sent to Materials and Research Division. The test results must be received by Materials and Research Division prior to shipment of the ground granulated blast furnace slag.

MILL SAMPLING PROCEDURE:

The sampling procedure requirement for the ground granulated blast furnace slag is one 10-lb sample. The sample shall be taken on the first production day of each month for the grade produced. The sample will be a composite of that day's production. Each Sample will be shipped in a leak and moisture resistant container, and will be identified with the location and name of the production mill, ground granulated blast furnace slag grade produced, date produced, and storage bin number. The accompanying paperwork, including the mill analysis shall be for the sample being submitted to NDOR, will be placed in an enveloped to keep papers clean.

MILL SAMPLE SHIPPING:

The samples are to be shipped to the NDOR Materials & Research facility at one of the addresses below. The producer will be responsible for the cost of shipping.

WHEN USING THE U.S POST SERVICE:
Portland Cement Concrete Laboratory
Nebraska Department of Roads
Materials and Research Division
P.O Box 94759
Lincoln, Nebraska 68509-4759

WHEN USING UPS:
Portland Cement Concrete Laboratory
Nebraska Department of Roads
Materials and Research Division
1400 Nebraska Highway 2

Lincoln, Nebraska 68509-4759

CERTIFICATES OF COMPLIANCE:

Certificates of compliance shall be issued by the producing plants. Copies of the certificates must accompany each load from a terminal. The forms must include the following:

- Name and location of the producing mill
- Consignee and destination of the shipment
- Date shipped from the producing mill (not the date shipped from the terminal)
- Railroad car or truck identification number
- Grade of ground granulated blast furnace slag
- Quantity of ground granulated blast furnace slag shipped Certified test number, date, and bin or silo number

Each form for a truck shipment must include a non-repeated order number or identification number. The following signed certification statement or similar wording must also be included on the form.

This is to certify that this shipment of fly ash was taken from the bin indicated and that it meets the specifications of the Nebraska Department of Roads.

Signed_____
For_____

The plant or terminal will send two shipment identification and certification of compliance forms with each shipment. The concrete producer will retain one copy of the certificate of compliance for their records and one will be collected by a state inspector if necessary.

Shipments of fly ash may be randomly sampled by NDOR personnel, as directed by the Materials and Research Division, and tested at the central laboratory in Lincoln.

POLICY FOR CERTIFICATION OF READY MIX PLANTS

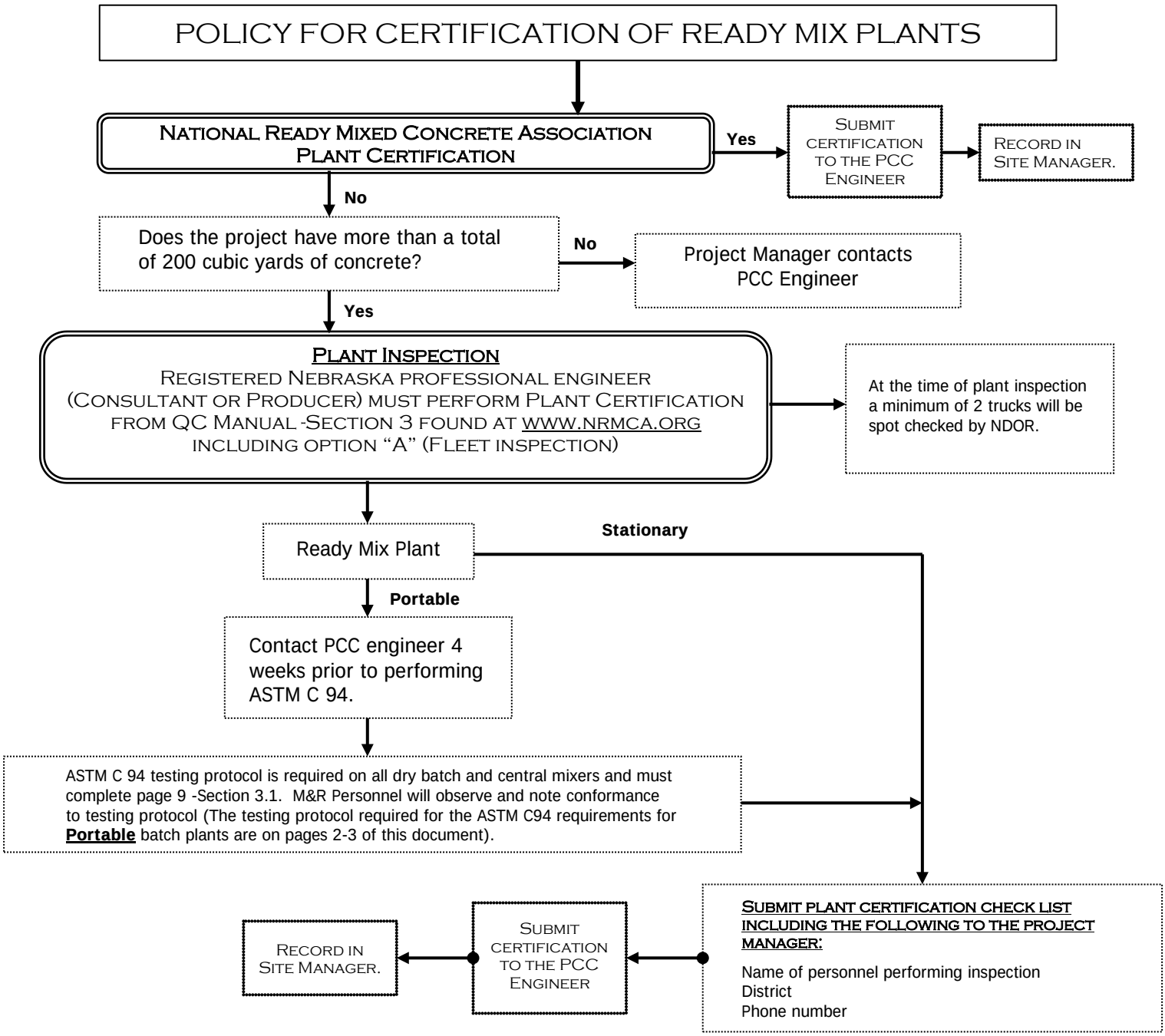

NOTE:

1. Stationary Plants/Truck Certifications are required every two years.
    a. During plant certification, if a plant is using washwater in the concrete mix, the washwater shall be tested. See Item 12 of this policy for required testing.
2. Portable plants require certification a minimum of once a year
    a. Contact PCC Engineer for a possible waiver if:
        i. Portable plants remain at the same location longer than one year.

ASTM C94 REQUIREMENTS FOR PORTABLE BATCH PLANTS

1. ASTM C94 shall be performed on all portable batch plants

2. Contractor is responsible to have testing performed by ACI certified Grade I Technician

3. Test results shall be certified and submitted to the project manager/ QA for the ASTM C-94 testing along with the plant certification check list.

4. NDOR Materials and Research will have personnel observing the testing and noting conformance to the testing protocol.

5. Testing shall be performed the 1st week of concrete plant production.

6. All plants shall be allowed to perform regular paving operations at minimum of 60 sec. mix time or at the plant manufacturers' recommended mixing time, whichever is greater.

7. Samples will be taken at the mixer, immediately after the mix time is completed.

8. There will be a need for two samples one at 15% and one at 85% of the batch, in loaders, wheel barrows, a storage location etc. The samples must be protected to maintain the quality of the sample.

9. Slump and Air should be performed within 15 min. of each sample.

10. As a minimum, the following 5 tests will be performed and 4 must pass for the mixer to be approved at that specified mixing time.

    a) Mass per cubic foot calculated to an air free basis, (¼ cu. ft can be used)
    b) Air Content, volume % of concrete
    c) Slump
    d) Coarse aggregate content, portion by mass of each sample retained on #4 sieve, %
    e) Average compressive strength at 7 days for each sample, based on average strength of three test specimens, %

Optional – Mass per unit volume of air free mortar based on average for all comparative samples tested, % (If this is used in addition to the 5 above, a total of 5 of the 6 must pass the ASTM C94 tolerances)

Table A1.1 Requirements for Uniformity of Concrete (According to ASTM C94- Page 56-Annual Book of ASTM Standards. Vol. 05.02)

Test	Requirement, Expressed as Maximum permissible Difference in Results of Test of Samples taken from two Locations in the Concrete Batch
Mass per cubic foot calculated to an air-free basis, lb/ft^3	1.0
Air Content, volume % of concrete	1.0
Slump: If average Slump is 4 in or less, in If average slump is 4-6 in	 1.0 1.5
Coarse Aggregate content, portion by mass of each sample retained on No. 4 sieve %	6.0
Mass per unit volume of air-free mortar[A] based on average for all comparative samples tested, %	1.6
Average compressive strength at 7 days for each sample,[B] based on average strength of all comparative test specimens, %	7.5[C]

[A] "Test for variability of Constituents in Concrete, "Designation 26, Bureau of Reclamation Concrete Manual, 7th Edition.[4]
[B] Not less than 3 cylinders will be molded and tested from each of the samples
[C] Approval of the mixer shall be tentative, pending results of the 7 day compressive strength

11. If a mixer performance test fails immediately, and the contractor wants to continue a performance test at that particular mixing time, two consecutive tests must pass 4 or 5 ASTM C-94 uniformity requirements

12. Washwater Testing
    The following tests may be completed by NDOR to pre-approve washwater that is to be used in a concrete mix:
    ASTM C 1602 Mixing Water Used in the production of Hydraulic Cement Concrete
    ASTM C 1603 Measurement of Solids in water
    ASTM C 31 Making and curing Concrete Test Specimens in the Field
    ASTM C 39 Compressive Strength of Cylindrical Concrete Specimen
    ASTM C 191 Time of Setting of Hydraulic Cement by Vicat Needle.
    ASTM D 512 Chloride Ion in Water
    ASTM D 516 Sulfate Ion in Water
    NDR C 114 Chemical Analysis of Hydraulic Cement- Testing (Alkalinity)

PIPE MATERIAL POLICY

Policy: This policy will replace all previous policies regarding the selection of pipe material for cross drains, drive pipe, drop pipe, storm sewers, and railroad pipe (refer to the Commentary on page A-7 for supplementary information). Under this policy, designers will select the allowable pipe material options for each installation and must follow the NDOR Drainage Design & Erosion Control Manual. The contractor will choose the final pipe material from the list of options provided.

The following topics are discussed in more depth:

- Types of pipe specified in this policy
- Maximum permissible diameter of standard pipe
- Design values for Manning Coefficient, (n)
- Flared end sections
- Minimum and maximum fill heights
- Excavation, bedding, and backfill requirements
- Functional use of different pipes
- Connections

TYPES OF PIPE SPECIFIED IN THIS POLICY

RCSP Reinforced Concrete Sewer Pipe

RCP Reinforced Concrete Pipe

MCCMP Metallic Coated Corrugated Metal Pipe, which includes:
GCCMP Galvanized (Zinc) Coated Corrugated Metal Pipe and
ACCMP Aluminum Coated Corrugated Metal Pipe

PCCMP Polymer Coated Corrugated Metal Pipe

HDPE High Density Polyethylene Pipe, which includes:
HDPE-CI (Corrugated Interior) and
HDPE-SI (Smooth Interior)

PVC Polyvinyl Chloride Pipe

The numerical designations shown below will be used by designers for specifying the various types of pipe:

Type	1	2	3	4	5	6	7	8
	RCSP	RCP	GCCMP	ACCMP	PCCMP	HDPE CI	HDPE SI	PVC

Designers shall identify all pipes by their corresponding Type number. For example, if RCSP, PCCMP and PVC are appropriate options, the designation would be 1-5-8. The Type "1" in this example is a RCSP.

Note: Normally, the contractor has the option of selecting the class of pipe, and type of installation in accordance with the fill height tables shown on the plans. However, for fill heights less than one foot, the designer must specify the class of pipe required. Refer to the Drainage Design and Erosion Control Manual for live load information. Use Attachment 2 for maximum fill height data.

MAXIMUM PERMISSIBLE DIAMETER OF STANDARD PIPE

The maximum allowable inside diameter for the various pipes are shown in Attachment 2. These pipes are standard manufactured sizes. Sizes other than those shown are considered special designs that must be submitted to NDOR for approval.

DESIGN VALUES FOR MANNING COEFFICIENT, (n)

The selected (n) value for design purposes when using corrugated pipe (MCCMP, PCCMP, and HDPE-CI) is 0.024. The design (n) value for smooth interior pipes (RCSP, RCP, PVC, and HDPE-SI) is 0.012. When it is necessary to determine the true magnitude of the pipe outlet flow velocity, designers should use the actual (n) value recommended by the manufacturer to perform computations. When designing for outlet control and *both* corrugated and smooth pipe are selected, the designer will use an (n) value of 0.024. A Manning (n) value of 0.012 shall be used when *only* smooth interior pipe are specified.

FLARED END SECTIONS

Use concrete flared end sections (CFES) for all concrete pipes. Specify metal flared end sections (MFES) for metal and plastic pipes when flared end sections are required. Flared end sections are not required for drive pipes unless they are to be installed within the clear zone. Safety flared end sections manufactured with a 10:1 slope and equipped with protective cross bars must be provided for the approach end of all drive pipes placed within the lateral obstacle clearance area.

MINIMUM AND MAXIMUM FILL HEIGHTS

Fill height determines the amount of dead load (or live load) that is imposed upon a culvert pipe. Minimum fill height is defined as the vertical distance measured from the top of the conduit to the bottom of the pavement or shoulder surfacing at its lowest point. Maximum fill height is defined as the vertical distance measured from the top of the conduit to the top of the pavement at its highest point. Minimum fill height for all culverts is one foot. The designer should review the live load computations as shown in the Drainage Design and Erosion Control Manual for special circumstances when this one foot minimum cannot be maintained. The maximum fill height that a pipe can withstand depends greatly on the type of bedding and backfill, pipe size, and pipe material. Refer to Attachment 2, along with the appropriate Special Plans, for guidelines in specifying various types of pipe.

EXCAVATION, BEDDING, AND BACKFILL REQUIREMENTS

Refer to Special Plan 4110, "Bedding and Backfill Requirements for Concrete Pipe", for installation details. Special Plan 4110, Sheet 4, "Bedding and Backfill Requirements for MCCMP, PCCMP, and Plastic Pipe", shows details for installing flexible pipe. Granular material is required for all flexible MCCMP, PCCMP, and plastic pipe installed under surfaced roadways. Unless special circumstances exist, granular material is not required for drive pipe, drop pipe, or temporary pipe installed outside the surfaced roadway prism.

On trench installations, the trench width depends on the outside diameter of the pipe and the side clearance requirement on each side of the pipe as shown on the Special Plans. Trench depth depends on the size of the pipe and the flow line location relative to the ground surface. On embankment installations, where the flowline of the pipe is above the natural ground, the culvert contractor is required to raise the ground along the centerline of the pipe to an appropriate elevation above the flowline (See Special Plan 4110). This embankment must be wide enough to excavate to the proper depth and install the pipe at the flowline shown on the cross sections. A contractor may choose to provide an embankment deep enough to use a trench installation. All excavations will be determined as established quantities using the method of measurement as shown in the current Nebraska Standard Specifications for Highway Construction.

FUNCTIONAL USE OF DIFFERENT PIPES

The functional usage of the various pipes that designers specify is summarized in Attachment 3. The plus sign shown in the Functional Usage table signifies that the use of a particular pipe material is acceptable for that function. The minus sign indicates where material use is prohibited. Designers may refer to the flow chart in Attachment 1 for assistance in the pipe selection process.

CONNECTIONS

All RCP and RCSP connections under the roadway prism (or back-to-back of curb-line on urban projects) shall be Tongue and Groove (T&G) or modified T&G type, and have watertight joints (using cement mortar, fibered roof coating, or gaskets) in accordance with the Nebraska Standard Specifications for Highway Construction. All plastic and CMP pipe under the roadway prism (or back-to-back of curb-line) must be installed with approved watertight joints. CMP and plastic pipe outside the roadway prism (or back of curb-line) may be installed with soil tight connecting bands or other approved soil tight joints. All pipe used for sewer applications must be installed with approved watertight connections.

CULVERT EXTENSIONS

Existing culverts will be extended using the same material as the existing structure. If the plans call for extension of Corrugated Metal Pipe Culvert, the pipes shall be connected by the contractor with an approved connecting band. When the plans designate the extension of a Concrete Pipe Culvert, the connection shall be made by enclosing the connecting joint with a concrete collar.

TEMPORARY PIPE

The designer should contact the District to determine culvert type when temporary pipe is to be placed under a temporary (2 years or less) facility such as a temporary road or median crossover. If the pipe is to be furnished by the State, the construction note will call for INSTALLING the pipe. If the pipe is to be furnished by the contractor, the construction note will call for BUILDING the pipe. The District will also determine if the pipe will be salvaged to the State when the temporary roadway is removed. Corrugated metal pipe (Type 3, 4 or 5) will be allowed for temporary roadways. Granular backfill for temporary structures Type 3, 4 or 5 is not required.

ATTACHMENT 1 PIPE SELECTION FLOW CHART

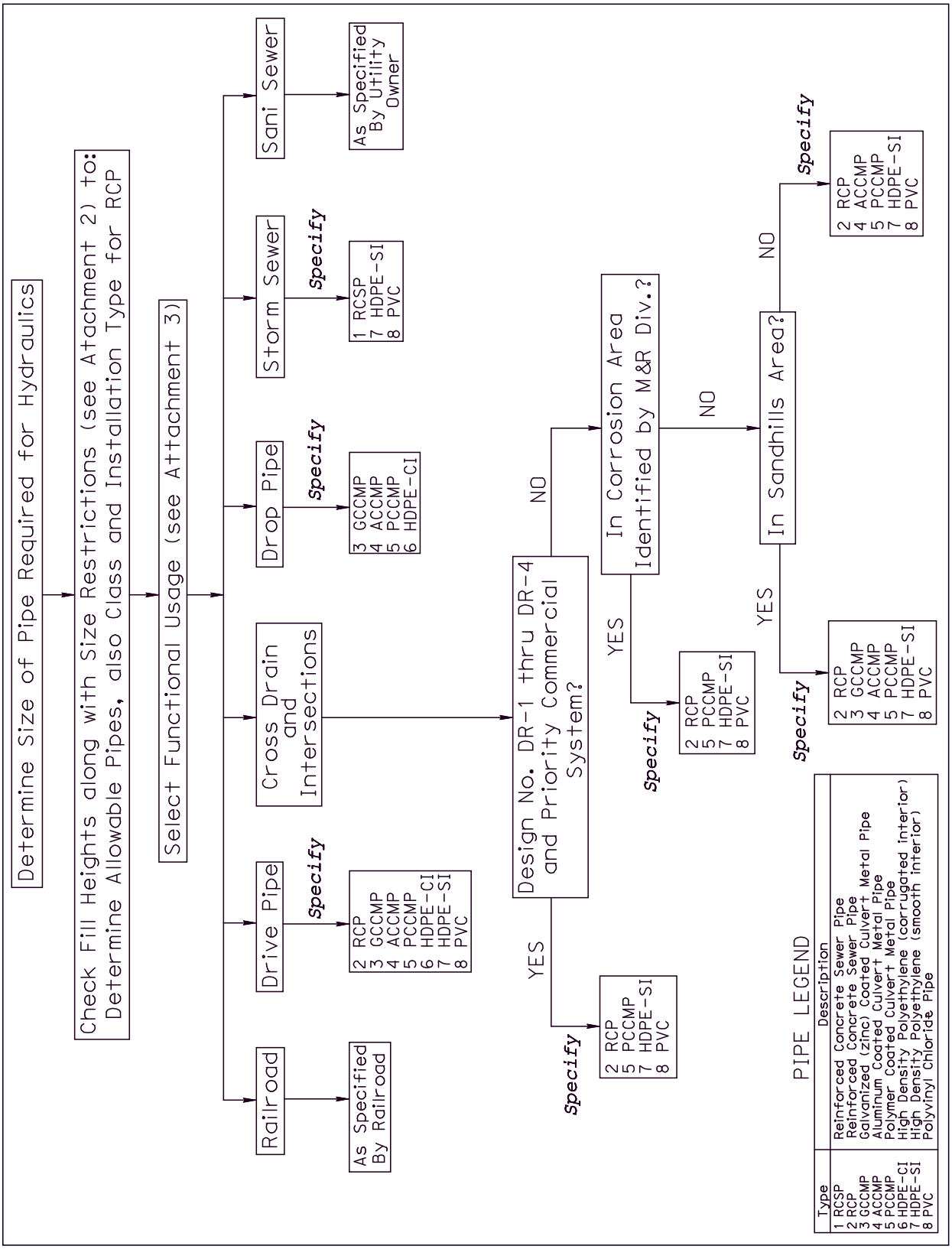

ATTACHMENT 2 PIPE SIZE AND FILL HEIGHT REQUIREMENTS

Maximum Permissible Diameters Of Standard Pipe

The following interior pipe diameters (in inches) are considered maximum standard sizes. Larger sizes may be allowed by special design approved by NDOR.

Type	1		2	3	4	5	6	7	8
	RCSP		RCP	GCCMP	ACCMP	PCCMP	HDPE		PVC
	III	IV	V				CI	SI	
	108	72	48	84	84	84	36	36	36

Maximum Fill Heights (feet) For Round Concrete Pipe

	Installation Type 3			Installation Type 2			Installation Type 1		
Pipe Size (in)	Class III	Class IV	Class V	Class III	Class IV	Class V	Class III	Class IV	Class V
15	12	15	21	15	19	26	23	28	40
18	12	17	24	16	22	30	24	32	45
21	13	19	26	16	24	32	25	37	48
24	13	19	26	17	24	33	25	32	45
27	13	17	26	17	21	34	23	26	51
30	12	14	25	15	17	32	20	21	49
36	10	16	24	13	21	31	20	31	47
42	10	15	23	13	19	29	20	29	44
48	10	14	22	13	18	29	20	28	43
54	10	14		13	17		20	27	
60	9	14		12	18		19	28	
66	9	14		12	18		19	28	
72	9	14		12	18		19	28	
78	9			12			19		
84	9			12			19		
90	9			12			20		
96	9			12			19		
102	10			13			20		
108	10			14			22		

The Type 3 Installation (shaded) is the NDOR Standard. See Special Plan 4110 (Bedding and Backfill for Concrete Pipe) for additional information about Table development and usage.

Maximum Fill Heights For Flexible Pipe

The maximum dead load fill height for HDPE, PVC, and CMP is set at 40 feet, using the bedding and backfill requirements as shown in Special Plan 4110. Consult with the pipe manufacturer when designing for fills greater than 40 feet, or when special situations are encountered that are beyond the scope of this policy. When installing flexible pipe outside the roadway prism (or back of curb-line on urban projects), and when granular materials are not used as shown in this policy, the maximum fill height is set at 20 feet (standard proctor test density for non-granular material must be greater than 95%).

ATTACHMENT 3 PIPE DESIGN APPLICATIONS AND EXAMPLES

Functional Usage

Type 8	1	2	3	4	5	6	7
Functional Usage	**RCSP (All Classes)**	**RCP (All Classes)**	**GCCMP Galvanized (Zinc) Coated CMP**	**ACCMP Aluminum Coated CMP**	**PCCMP Polymer Coated CMP**	**HDPE-CI Corrugated Interior**	**HDPE-SI Smooth Interior**	**PVC**
Cross Drain & Intersections	+	+	See Footnotes		+	-	+	+
Drive Pipes	-	+	+	+	+	+	+	+
Drop Pipe	-	-	+	+	+	+	-	-
Railroad	As Specified by the Railroad							
StormSewer	+	-	-	-	-	-	+	+
Sani. Sewer	As Specified by the Utility Owner							

Cross Drain and Intersection Footnotes:

- Galvanized CMP---Allowed for Design No. DR-5, DR-6 and DR-7 in the Sandhills, unless identified corrosion areas exist.
- Aluminum Coated CMP---Allowed for Design No. DR-5, DR-6 and DR-7, unless identified corrosion areas exist.

Examples of Culvert Types Specified

Pipe Dia. (in.)	Max. Fill Height (f.)	Pipe Function	Location	Type Specified
48	20	Cross drain pipe	S. Hills/DR-5/no corrosive areas	1
54	20	Cross drain	DR-6/corrosive area	2-5
36	24	Cross drain	Statewide/DR-3	2-5-7-8
30	5	Cross drain	Statewide/Priority/Commercial System	2-5-7-8
42	25	Cross drain	Not Sandhills/DR-7/no corrosion	2-4-5
54	5	Storm sewer	Statewide	1
36	5	Storm sewer	Statewide	1-7-8
48	15	Drive pipe	Statewide	2-3-4-5
24	15	Drive pipe	Statewide	2-3-4-5-6-7-8
24	5	Drop pipe	Statewide	3-4-5-6

Pipe Legend

Type	Description
1 RCSP	Reinforced Concrete Sewer Pipe
2 RCP	Reinforced Concrete Pipe
3 GCCMP	Galvanized (zinc) Coated Culvert Metal Pipe
4 ACCMP	Aluminum Coated Culvert Metal Pipe
5 PCCMP	Polymer Coated Culvert Metal Pipe
6 HDPE-CI	High Density Polyethylene (corrugated interior)
7 HDPE-SI	High Density Polyethylene (smooth interior)
8 PVC	Polyvinyl Chloride Pipe

COMMENTARY

Following is a summary of the major changes, additions and improvements incorporated in the 1997 Pipe Material Policy:

Plastic Pipe

Past policy and Specifications limited the use of plastic pipe primarily for driveway, underdrain and sewer applications. As a result of research and field testing, the use of plastic pipe (HDPE and PVC) has been broadened to include roadway cross drain as well as other drainage applications. The new Special Plans for flexible pipe show: installation, material, and backfill requirements. Also, due to the non-corrosive nature of these materials, plastic pipe is included for use in areas where corrosion of metallic coated culverts is a concern.

Pipe Installations under Pavement

In order to extend the design life (by improving structural performance, reducing settlement and joint movement etc.) of surfaced roadways, improved cross section details for all pipes (concrete, metal and plastic) have been developed. Flexible pipes require a granular material envelope to improve in-place structural performance, while reducing compaction effort and pipe movement during installation. Use of granular bedding and backfill with metallic coated pipes also has the benefit of reducing soil-side corrosion. Use of polymer coated CMP effectively reduces interior corrosion as well as exterior soil-side corrosion, and therefore, is allowed for use under all roadways.

New Special Plans for concrete pipe installations have been developed in order to provide more options for the designer, contractor, and pipe manufacturer in regard to pipe class selection and installation. Under this policy, the contractor will be allowed to select the type of installation, and class of pipe based upon available fill height information shown on the plans. Previous specifications required the culvert contractor to place concrete pipe upon a carefully shaped trench bottom. The new plans provide more options for bedding and backfill in order to utilize different classes of pipe, or to reduce labor during installation.

NDOR concrete pipe design procedures are currently being upgraded in order to take advantage of concrete pipe computer programs such as SIDD and PIPECAR. These programs are already being used by the concrete pipe industry, and are acceptable programs developed thru the efforts of ANSI, FHWA, and the Concrete Pipe Association. The new Special Plans for concrete pipe incorporate detailing to support and complement these industry accepted programs.

Table 1
Standard Installations, Soils and Minimum Compaction Requirements

Installation Type	Bedding Thickness	Haunch and Outer Bedding	Lower Side
Type 1	Do/24 minimum, not less than 3 in. If rock foundation, use Do/12 minimum, not less than 6 in.	95% SW	90% SW, 95% ML, 100% CL, or natural soils of equal firmness
Type 2		90% SW or 95% ML	85% SW, 90% ML, 95% CL, or natural soils of equal firmness
* Type 3		85% SW, 90% ML, or 95% CL	85% SW, 90% ML, 95% CL, or natural soils of equal firmness

Table 1 Notes:

* *The Type 3 Installation shown is the NDOR Minimum Standard, using either a shaped trench according to the Standard Specifications, or at the option of the contractor, the bedding with compactions as shown.*

Allowable fill heights for the Type 1, 2, and 3 installations are shown in Table 4.

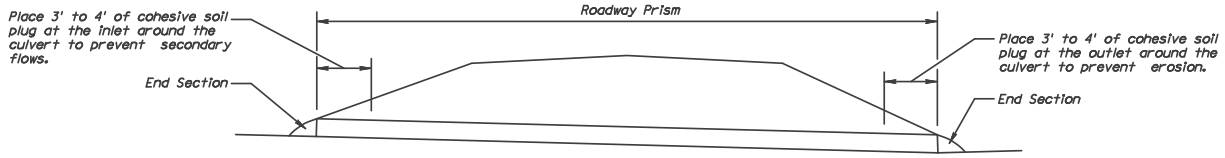

LIMITS OF BEDDING AND BACKFILL

Excavation, Bedding and Embankment Sequence:

Trench Installation:

(A) Determine the flow line and trench bottom elevations.

(B) Determine the shape of trench. Decide if shoring is needed. Contractor is ultimately responsible for the safety of all workers, equipment and materials in the trench.

(C) Place the bedding material (see Table 1) loosely.

(D) Place pipe on the bedding and compact Outer bedding, (see Table 1).

(E) Place and compact the Lower side, Haunch and Overfill material at 6 in. intervals.

Embankment Installation:

(A) Determine the flow line and Spring Line elevation.

(B) If flow line is above the natural ground, place an embankment at least 3Do wide with 3:1 foreslopes or flatter at Spring Line elevation, compacted at roadbed required compaction.

(C) If the flow line is below the natural ground but the Spring Line is above the natural ground, place the embankment similar to the one in step B.

(D) Excavate to proper elevaton.

(E) Place bedding material (see Table 1) loosely.

(F) Place the pipe on the bedding material and compact Outer beddding material (see Table 1).

(G) Place and compact the Haunch, Lower side and Overfill material at 6 in. intervals.

Notes for Trench Installations:

1. *Compaction and soil symbols, i.e. 95% SW, refer to SW soil material with minimum Standard Proctor compaction of 95%.*
2. *The trench top elevation shall be no lower than 1 ft. below the bottom of the pavement base material.*
3. *Soil in bedding and haunch zones shall be compacted to at least the same compaction as specified for the majority of soil in the backfill zones.*
4. *The trench width shall be wider than shown if required for adequate space to attain the specified compaction in the haunch and bedding zones.*
5. *For trench walls that are within 10 degrees of vertical, the compaction or firmness of the soil in the trench walls and lower side zone need not to be considered.*
6. *For trench walls with greater than 10 degree slopes that consist of embankment, the lower side shall be compacted to at least the same compaction as specified for the soil in the backfill zone.*

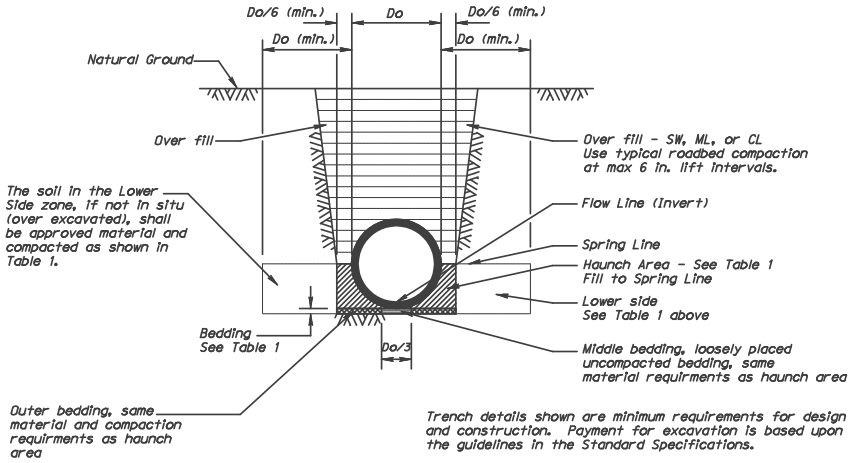

Trench details shown are minimum requirements for design and construction. Payment for excavation is based upon the guidelines in the Standard Specifications.

Trenches shall be excavated in accordance with approved safety practice.

TYPICAL TRENCH INSTALLATION

PROFESSIONAL CIVIL ENGINEER GEORGE WOOLSTRUM E-4510 STATE OF NEBRASKA

BEDDING AND BACKFILL REQUIREMENTS FOR CONCRETE PIPE

SHEET 1 OF 4

SPECIAL PLAN C

1 of 4 4110 1 E 01

Table 1
Standard Installations, Soils and Minimum Compaction Requirements

Installation Type	Bedding Thickness	Haunch and Outer Bedding	Lower Side
Type 1	Do/24 minimum, not less than 3 in. If rock foundation, use Do/12 minimum, not less than 6 in.	95% SW	90% SW, 95% ML, or 100% CL.
Type 2		90% SW or 95% ML	85% SW, 90% ML, or 95% CL.
* Type 3		85% SW, 90% ML, or 95% CL	85% SW, 90% ML, or 95% CL.

Table 1 Notes:

** The Type 3 Installation shown is the NDOR Minimum Standard, using either a shaped trench according to the Standard Specifications, or at the option of the contractor, the bedding with compactions as shown.*

Allowable fill heights for the Type 1, 2, and 3 installations are shown in Table 4.

Table 2
Pipe Dimensions

Nominal Pipe Diameter (inches)	Standard Outside Pipe Diameter, Do (Span)			
	Round Pipe	Arch Pipe	H. Ellip. Pipe	V. Ellip. Pipe
15	19.5	22.5		
18	23	27	28.5	
21	26.5	31.5		
24	30	34.5	36.5	
27	33.5		41	
30	37	43.25	45.5	
36	44	51.75	54	38
42	51	60.13	63	44
48	58	68.5	71	49
54	65	76	80	55
60	72	85	89	61
66	79		97	67
72	86	102	106	73
78	93		114	79
84	100	118	123	85
90	107			
96	114			
102	121			
108	128			

Table 3
Soil Classification for Bedding & Backfill

ASTM Soil Group Symbol D 2487	Description	Percentage Passing Sieve Sizes		
		1½ in. (40 mm)	No. 4 (4.75 mm)	No. 200 (0.075 mm)
SW	Well graded sands and gravelly-sands: little or no fines. Non Plastic	100%	≥ 50% of "Course Fraction"	≤ 5%
ML	Inorganic silts and very fine sands, rock flour, silty or clayey-fine-sands, silts with slight plasticity		100%	≥ 50%
CL	Inorganic clays of low to medium plasticity, gravely-clays, sandy-clays, silty-clays, lean clays			

Notes for Embankment Installations:

1. Compaction and soil symbols, i.e. 95% SW, refer to SW soil material with a minimum Standard Proctor compaction of 95%.

2. Soil in the outer bedding, haunch, and lower side zones, except within the Do/3 middle bedding, shall be compacted to at least the same compaction as the majority of the soil in the overfill zones.

3. Subtrenches

3.1 A subtrench is defined as a trench with its top at an elevation lower than 1 ft below the bottom of the pavement base material.

3.2 The minimum width of a subtrench shall be 1.33Do, or wider if required for adequate space to attain the specified compaction in the haunch and bedding zones.

3.3 For subtrenches with walls of natural soil, any portion of the lower side zone in the subtrench wall shall be at least as firm as an equivalent soil placed to the compaction requirements specified for the lower side zone, and as firm as the majority of soil in the overfill zone, or shall be removed and replaced with soil compacted to the specified level.

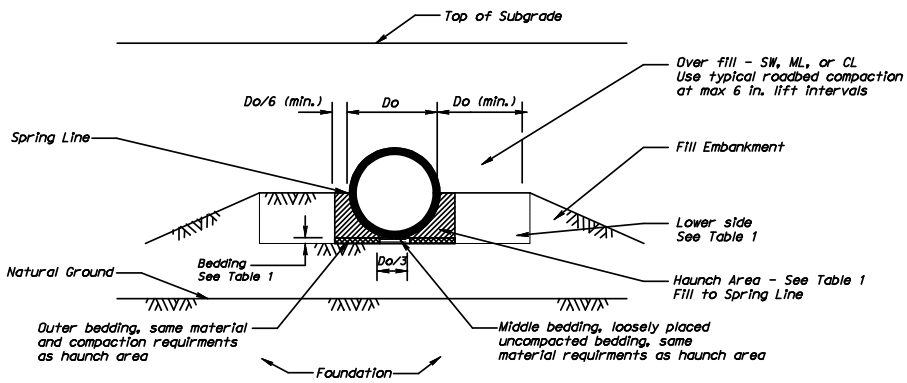

TYPICAL EMBANKMENT INSTALLATION

General Notes:

When in-situ lateral soil resistance is negligible, e.g. peat, muck, or highly expansive soil, embedment shall be placed and compacted at the direction of the Engineer.

To protect the pipe and backfill during construction, provide a minimum of 36 in. of compacted fill material over the top of the pipe before allowing any heavy equipment to transverse over the pipe. Extremely heavy equipment may require larger cover as determined by the contractor.

The pipe volume should not be subtracted from the volume of excavation.

These design standards are minimum. If a more restrictive design is required by the Engineer or culvert manufacturer, then these standards shall be modified. Changes to pay item quantities due to unforeseen site conditions shall be calculated and incorporated into the contract thru a change order.

Both ends of the pipe shall be sealed with cohesive soil (around the pipe extending 3 ft. to 4 ft. from each end) to protect against infiltration and erosion.

Bedding and backfill material is not paid for directly, but is subsidiary to the linear feet of culvert.

Bedding and backfill material shall meet ASTM D 2487 (soil groups as shown in Table 3).

Percent compaction shall be determined in accordance with NDOR Standard Test Method T 99.

PROFESSIONAL CIVIL ENGINEER GEORGE WOLSTRUM E-4510 STATE OF NEBRASKA

BEDDING AND BACKFILL REQUIREMENTS
FOR CONCRETE PIPE
SHEET 2 OF 4

SPECIAL PLAN C

2 of 4 4110 1 E 01

Standard Installations, Soils and Minimum Compaction Requirements

Installation Type	Bedding Thickness	Haunch and Outer Bedding	Lower Side
Type 1	Do/24 minimum, not less than 3 in. If rock foundation, use Do/12 minimum, not less than 6 in.	95% SW	90% SW, 95% ML, or 100% CL,
Type 2		90% SW or 95% ML	85% SW, 90% ML, or 95% CL,
* Type 3		85% SW, 90% ML, or 95% CL	85% SW, 90% ML, or 95% CL,

Notes:

** The Type 3 Installation (shaded) in Table 4 is the NDOR Standard, using either a shaped trench according to the Standard Specifications, or at the option of the contractor, the bedding with compactions as shown.*

Installation Type 2 and Type 1 are improved methods in order to support higher fill heights using class III, IV, and V circular concrete pipe. Installation Type I will provide the best in-situ performance using greater compaction with granular bedding and backfill. The contractor will choose the installation type and class of pipe. Actual project fill heights must be known in order to use Table 4.

Round equivalent, non-circular pipe such as arch or elliptical pipe, may be selected, provided such pipe are designed and manufactured to the same D-loads and ultimate strengths (see Table 5) as the selected circular pipe from the fill height table.

Table 4
Maximum Fill Heights (feet) For Standard Design (AASHTO M 170) Round Concrete Pipe

	Installation Type 3* (NDOR Standard)			Installation Type 2			Installation Type 1		
Pipe Size (in.)	Class III	Class IV	Class V	Class III	Class IV	Class V	Class III	Class IV	Class V
15	12	15	21	15	19	26	23	28	40
18	12	17	24	16	22	30	24	32	45
21	13	19	26	16	24	32	25	37	48
24	13	19	26	17	24	33	25	32	45
27	13	17	26	17	21	34	23	26	51
30	12	14	25	15	17	32	20	21	49
36	10	16	24	13	21	31	20	31	47
42	10	15	23	13	19	29	20	29	44
48	10	14	22	13	18	29	20	28	43
54	10	14		13	17		20	27	
60	9	14		12	18		19	28	
66	9	14		12	18		19	28	
72	9	14		12	18		19	28	
78	9			12			19		
84	9			12			19		
90	9			12			20		
96	9			12			19		
102	10			13			20		
108	10			14			22		

General Notes:

Fill heights shown in Table 4 were developed using ASCE Standards For Direct Design of Buried Precast Concrete Pipe, manufactured in accordance with AASHTO M 170 specification requirements (see Table 4 footnote for exceptions). Fill heights shown apply only to round pipe (under full flow conditions), used under rigid and flexible pavement, with soil overfill weighing 120 pounds per cubic foot. Under special circumstances (where pavement is not used and live load becomes critical, or different soil density is encountered, or the one foot minimum clearance from the bottom of the pavement to the top of the pipe cannot be maintained) these fill heights may need to be modified. Deeper Fill Heights may be used by Submitting a Special Standard Installation Direct Design (SIDD) for NDOR Approval.

Concrete pipe designs that are not shown in applicable AASHTO specifications will be considered special designs that must be submitted to NDOR for approval.

Table 4 Notes:

AASHTO M 170 specifications are modified as follows:

Only single inner cage, circular reinforcing is allowed for class III, 15, 18, 21, and 24 in. round RCP as shown:

Pipe Size (in.)	Class	Minimum Circumferential Reinforcing ($in.^2/ft.$ of Pipe Wall)
15	III	0.08
18	III	0.10
21	III	0.12
24	III	0.14

Table 5
D-Loads For Concrete Pipe

Pipe Class	III	IV	V
D-Load to produce a 0.01-in. crack	1350	2000	3000
D-Load to produce the ultimate load	2000	3000	3750

Notes:

Load on Pipe in pounds per linear foot = D-load x inside span in feet
D-load = Test load expressed in pounds-force per linear foot per foot of diameter

Applicable Specifications:

AASHTO M 170---Round RCP
AASHTO M 206---Arch RCP
AASHTO M 207---Elliptical RCP

BEDDING AND BACKFILL REQUIREMENTS FOR CONCRETE PIPE
SHEET 3 OF 4

SPECIAL PLAN C

3 of 4 4110 1 E 01

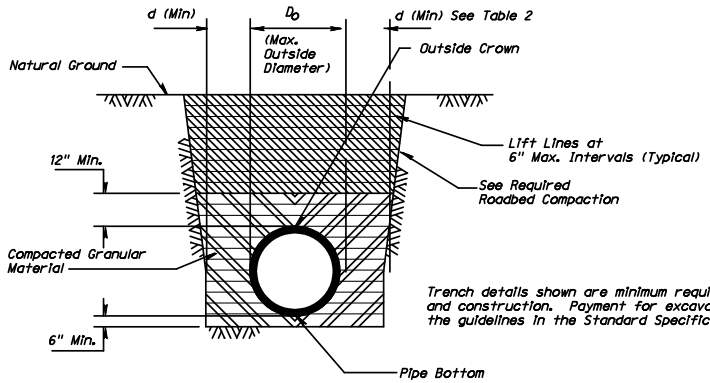

Trench details shown are minimum requirements for design and construction. Payment for excavation is based upon the guidelines in the Standard Specifications.

Trenches shall be excavated in accordance with approved safety practice.

TYPICAL TRENCH INSTALLATION

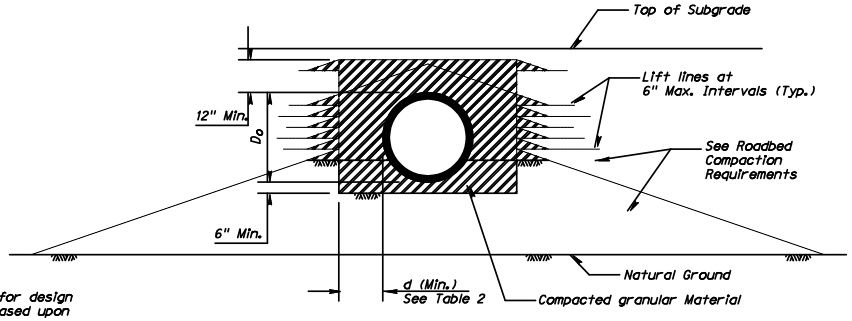

TYPICAL EMBANKMENT INSTALLATION

Table 1
Soil Classification for Granular Fill Material

	Soil Group Symbol D 2487	Description	% Passing Sieve Sizes		
			1½ in.	No. 4	No. 200
PLASTIC PIPE / MCCMP & PCCMP	GW	Well graded gravel and gravel-sand mixtures; little or no fines.	100%	℄ 50% of coarse fraction	℄ 5%
	GP	Poorly graded gravel and gravel-sand mixtures; little or no fines.			
	SW	Well graded sand and gravel-sands; little or no fines.		Δ 50% of coarse fraction	
	SP	Poorly graded sand and gravel-sands; little or no fines.			
	e.g. GW-GC SP-SM	Sand and gravels which are border line between clean and with fines.	100%	varies	5% to 12%
	GM	Silty gravel, gravel-sand-silt mixtures.	100%	℄ 50% of coarse fraction	12% to 50%
	GC	Clayey-gravel, gravel-sand-clay mixtures.			
	SM	Silty sands, sand-silt mixtures.		Δ 50% of coarse fraction	

Table 2
Minimum d (inches)

Nominal Pipe Diameter (inches)	Trench Installation		Embankment Installation	
	Metal Pipe	Plastic Pipe	Metal Pipe	Plastic Pipe
15	8	8	15	15
18	9	9	18	18
24	9	9	24	24
30	10	10	24	24
36	11	11	24	24
42	24		24	
48	24		24	
54	24		24	
60	24		24	
66	24		24	
72	24		24	
78	24		24	
84	24		24	

Notes:

Installations as shown are required under all surfaced roadways. Bedding and backfill for drive pipe or other pipe outside the roadway prism (or back of curb-line for urban projects) may be installed using suitable existing soil, placed and compacted in accordance with the Standard Specifications.

Where in-situ lateral soil resistance is negligible e.g. peat, muck, or highly expansive soil, embedment shall be placed and compacted at the direction of the Engineer.

To protect the pipe and backfill during construction, provide a minimum of 36" of compacted fill material over the top of the pipe before allowing any heavy equipment to traverse over the pipe. Extremely heavy equipment may require larger cover as determined by the contractor.

Pipe volume should not be subtracted from the volume of excavation.

These design standards are minimum. If a more restrictive design is required by the Engineer or the culvert manufacturer, then these standards shall be modified. Changes to pay item quantities due to unforeseen site conditions shall be calculated and incorporated into the contract by a change order.

Exposed ends of the pipe shall be sealed with cohesive soil (around the pipe extending 3' to 4' from each end) to protect against infiltration and erosion.

Granular fill material is not paid for directly, but is subsidiary to the linear feet of culvert.

Granular material shall meet ASTM D 2487 (soil group as shown in Table 1). Material shall be compacted to at least 90% proctor test density.

Percent compaction shall be determined in accordance with NDOR Standard Test Method T 99.

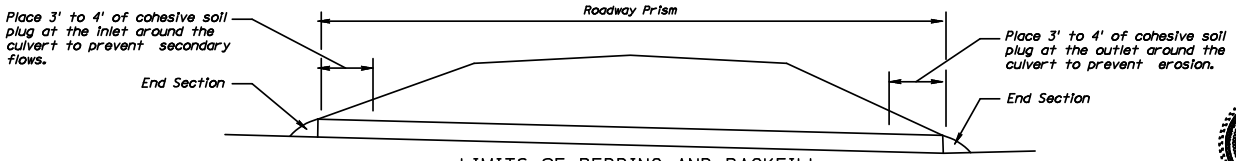

LIMITS OF BEDDING AND BACKFILL

BEDDING AND BACKFILL REQUIREMENTS FOR MCCMP, PCCMP AND PLASTIC PIPE

SHEET 4 OF 4

SPECIAL PLAN C

4 of 4 4110 1 E 01

Policy concerning testing, inspection and reporting of reinforced concrete culvert and sewer pipe and concrete flared-end sections

General:

Tests will be conducted under the supervision of the Materials and Research Division, at the pipe manufacturer's plant, using the Department's portable testing equipment and an approved testing frame provided by the pipe manufacturer. When considered desirable by the Materials and Research Division, tests may be conducted at the Department's Lincoln Laboratory.

Specifications and test methods:

The requirements of AASHTO Specification M 170-95, M 206-95, and M207-95 and the test methods designated therein, will govern for reinforced concrete pipe. Requirements for the class of pipe, shall be as specified by Department Policies, Plans, and the State of Nebraska Standard Specifications for Highway Construction. Concrete flared-end sections will be required to conform to the requirements of the Department's standard designs and to the applicable requirements of AASHTO Specification M 170-95, M 206-95, or M 207-95, Class II, Class A-II or Class HE-II respectively.

Plant identification or code:

Each State approved concrete pipe manufacturing plant will be issued a plant code number to be used by inspectors and by the Materials and Research Division in identifying samples and reports of tests conducted. The code or plant identification numbers assigned are as follows:

Ident No.	Pipe Manufacturer and Location of Plant
1T	Concrete Industries Inc., Lincoln
2T	Rinker Materials (Hydro Conduit), Valley
3T	American Concrete, Omaha
4T	Not assigned at this time
5T	Panhandle Concrete Products Co., Scottsbluff
6T	Cretex, Plattsmouth

TEST SAMPLES:

Each sample section of pipe or flared-end section to be tested will be selected by the Department's Inspector at the manufacturer's plant. Each sample selected will be marked on the interior wall with the code number of the plant (as noted above), followed by a "Serial Number" for the particular test. As an example: "1T-10" would identify a sample section of pipe manufactured by Concrete Industries Inc. in Lincoln (the tenth sample tested for this plant). In addition to the code and serial numbers, the Inspector shall also mark his own initials and the date sampled on the interior wall of the sample section.

TEST SAMPLES (CONT'D):

Reinforced concrete pipe and flared-ends shall be marked as required in the Nebraska Standard Specification for Highway Construction, Section 1037.02.

The Inspector shall prepare a sample identification form (DR Form 12) for each test specimen, stating the size and class of pipe or end section, the quantity to be represented, the date sampled and any special information concerning specifications. A copy of this form should be given to the Laboratory Technician in charge of conducting the test.

If an original sample should fail to comply with specification requirements, and additional samples are required for testing, these additional samples will be identified with the same code and serial number as the original sample (to which will be added "Check Sample A" and "Check Sample B").

NUMBER OF TESTS REQUIRED

One sample will be tested to represent a maximum of 1500 feet of each size and each class of pipe furnished by each manufacturer. A sufficient quantity of pipe, as determined by the Inspector, must be on-hand for random sampling prior to testing. A test section may represent pipe manufactured after a test is made, provided the quantity represented does not exceed the limit previously stated. New tests will be required for pipe manufactured more than six months after the date of manufacture of the original test section.

The number of tests required to represent a stock of concrete flared-end sections will be determined at the time of sampling by the Inspector. Up to 15 sections of a size will be represented by one test sample, if they were manufactured during a production run not exceeding a maximum of four weeks, and they appear by visual inspection to be of uniform quality.

The Department's Inspector shall keep a record of the quantity of pipe and flared-end sections supplied to projects from the stock represented by each test. When additional tests are required, the Lincoln Laboratory shall be notified. Such notification shall provide as much time as possible so that testing can be completed in timely order, avoiding any delays in the use of the pipe. Several sizes of pipe or end sections shall be grouped together for testing, in order to avoid unnecessary trip with the testing equipment.

BASIS OF APPROVAL:

Approval of Class III, IV, and V pipe, thirty-six inches (or thirty-six inches round equivalent) and smaller in diameter, will be based on the results of three-edge-bearing strength tests for the load to produce the 0.01 inch crack and the ultimate load; by conformance with the design prescribed in the Specifications; and by freedom from defects as determined by visual inspection. Approval of Class III, IV and V pipe **larger** than thirty-six inches (or thirty-six inches round equivalent) in diameter will be determined by the results of compression tests on drilled concrete cores; by conformance with the design prescribed in the Specifications; and by freedom from defects as determined by visual inspection. **At the option of the manufacturer, pipe larger**

BASIS OF APPROVAL (CONT'D):

than thirty-six inches (or thirty-six inches round equivalent) in diameter, may be accepted on the results of three-edge-bearing strength tests for the load to produce the 0.01 inch crack and the ultimate load; by conformance with design Specifications; and by freedom from defects as determined by visual inspection. For pipe larger than thirty-six inches (or thirty-six inches round equivalent), the manufacturer or his representative must select the type of test (core strength test, or three-edge-bearing strength test) to be used for acceptability of this pipe immediately prior to the testing performed by the Department's Inspector or representative. The manufacturer will be required to sign a document (see the sample form on page 5) indicating his or her designated test option preference for the particular manufacturing lot, size, and class of pipe under consideration. Pipe that fails to meet the strength requirements as determined by the selected test type may not be retested using one of the other test options aforementioned.

Approval of all sizes of pipe that are modified or special design not shown in AASHTO specifications will be based on the results of three-edge-bearing strength tests for the load to produce the 0.01 inch crack and ultimate load; by conformance with the design show; and by freedom from defects as determined by visual inspection.

The approval of concrete flared-end sections will be based on the results of compression tests on drilled concrete cores; by conformance with Standard Plans and design Specifications; and by freedom from defects as determined by visual inspection.

When considered necessary by the Materials and Research Division, additional tests may be conducted to represent any reinforced concrete pipe or concrete flared-end section in order to determine compliance with all specification requirements. Such tests may include three-edge-bearing strength tests, compression tests on drilled concrete cores, and tests of the cement, aggregate and reinforcement.

INSPECTION AND REPORTING

STOCK TEST REPORTS:

Reports of tests made on concrete pipe and flared-end sections, will be issued by the Lincoln Laboratory. Each report will be identified with the plant code and serial number assigned by the Inspector to the sample tested for the particular manufacturing plant. The Department will maintain project and stock shipping records for all tested pipe products for each plant.

IDENTIFICATION OF APPROVED PIPE:

All approved pipe or flared-end sections scheduled for use on Nebraska projects will be identified by the Department's Inspector at a manufacturer's plant. These markings shall include the plant identification and test number (originally assigned to the test specimen representing the pipe), marked on the inside of each approved section. The Inspector's initials will also be placed on the pipe alongside this identification number. The Inspector shall use suitable marking equipment to make permanent, legible markings.

IDENTIFICATION OF APPROVED PIPE (CONT'D):

The plant code identification number is to be marked on all sections of pipe and flared-ends in the lot or batch represented by the test specimen. Approved sections should be marked just prior to the time of shipment.

Each section of pipe or flared-end will be inspected before marking and no section will be marked which contains any of the defects or does not meet Specification requirements as follows:

1. Fractures or cracks passing through the shell, except for a single end crack that does not exceed the depth of the joint.
2. Defects that indicate imperfect proportioning, mixing, and molding.
3. Surface defects indicating a honeycombed or open texture.
4. Damaged ends, where such damage would prevent making a satisfactory joint.
5. Exposed steel reinforcement (exposed ends of stirrups or spacers used to position reinforcement is not cause for rejection).
6. Pipe does not include the required manufacturer's markings as per Nebraska Standard Specifications for Highway Construction, Section 1037.02.

SHIPMENT REPORTS:

The Department's Inspector for each manufacturer's plant will prepare reports to cover all reinforced concrete pipe and concrete flared-end sections supplied from that plant for use on Nebraska Projects. Proper forms approved by NDR will be used for reporting shipments to each project.

The original shipment report form will be sent to the Materials and Research Engineer (Lincoln Laboratory), Box 94759, Lincoln, Nebraska 68509. One additional shipment report copy shall be sent to the Field Engineer in charge of the project, as well as one copy sent to the District Engineer concerned. It is important that these reports be complete and accurate since estimates for payment cannot be released until these reports are on file.

This policy is considered in good faith and cooperation between the Nebraska Department of Roads and Concrete Pipe Manufacturers, regarding testing, inspection and reporting of reinforced concrete pipe products for State use. This policy, with its terms and conditions, are to be adhered to by each pipe manufacturer performing work, and manufacturing products destined for State of Nebraska projects.

State of Nebraska
Department of Roads
Materials and Research Division

Manufacturer Testing Designation Form for Pipe Larger Than 36 Inches (or 36 inch round equivalent) Diameter

Test Date_____

Pipe Manufacturer_____

*Please write next to each pipe size (and identification lot number being tested) your testing option preference. In the space provided, write "**Core**", to indicate your acceptability preference based upon core strength testing. Write in "**3-edge**", to indicate your preference for three-edge bearing strength testing. A signature of an authorized plant representative must accompany each test option selected.*

Pipe Size (in)	Pipe Class (3,4, or 5)	Date Mfg.	Ident. "T" No.	Test Option Selected	Authorized Plant Signature

Signature of Inspector(s) Performing Testing

_____

_____