Midwest States Regional Pooled Fund Research Program
Fiscal Year 2010 (Year 20)
Research Project Number TPF-5(193) Suppl. #21
NDOR Sponsoring Agency Code RPFP-10-CABLE-3

DYNAMIC TESTING OF A NON-PROPRIETARY, HIGH-TENSION, CABLE END TERMINAL SYSTEM

Submitted by

Jennifer Schmidt, Ph.D., P.E.
Post-Doctoral Research Associate

John Reid, Ph.D.
Professor

Ron Faller, Ph.D. P.E.
MwRSF Director
Research Associate Professor

Dean Sicking, Ph.D., P.E.
Emeritus Professor

MIDWEST ROADSIDE SAFETY FACILITY
Nebraska Transportation Center
University of Nebraska-Lincoln
130 Whittier Research Center
2200 Vine Street
Lincoln, Nebraska 68583-0853
(402) 472-0965

Submitted to

MIDWEST STATES REGIONAL POOLED FUND PROGRAM
Nebraska Department of Roads
1500 Nebraska Highway 2
Lincoln, Nebraska 68502

MwRSF Research Report No. TRP-03-294-14

March 21, 2014

TECHNICAL REPORT DOCUMENTATION PAGE

1. Report No. TRP-03-294-14	2.	3. Recipient's Accession No.	
4. Title and Subtitle Dynamic Testing of a Non-Proprietary, High-Tension, Cable End Terminal System		5. Report Date March 21, 2014 6.	
7. Author(s) Schmidt, J.D., Reid, J.D., Faller, R.K., and Sicking, D.L.		8. Performing Organization Report No. TRP-03-294-14	
9. Performing Organization Name and Address Midwest Roadside Safety Facility (MwRSF) Nebraska Transportation Center University of Nebraska-Lincoln 130 Whittier Research Center 2200 Vine Street Lincoln, Nebraska 68583-0853		10. Project/Task/Work Unit No. 11. Contract © or Grant (G) No. TPF-5(193) Suppl. #21	
12. Sponsoring Organization Name and Address Midwest States Regional Pooled Fund Program Nebraska Department of Roads 1500 Nebraska Highway 2 Lincoln, Nebraska 68502		13. Type of Report and Period Covered Final Report: 2012 – 2014 14. Sponsoring Agency Code RPFP–10-CABLE-3	
15. Supplementary Notes Prepared in cooperation with U.S. Department of Transportation, Federal Highway Administration.			

16. Abstract (Limit: 200 words)

Two bogie tests were conducted on a high-tension cable end terminal to evaluate the performance of a new design. The main goals of the new design were to promote quick cable release times, to retain the cable release lever during impact, to sustain no permanent deformation, to have a stub height less than 4 in. (102 mm), and to provide more clearance around the cable anchorage fittings.

In test no. HTCT-2, an 1,961-lb (844-kg) bogie vehicle impacted the cable end terminal at a speed of 52.8 mph (85.0 km/h) and an angle of 0 degrees, which is end-on to the terminal. The cable release lever was retained with the rotational joint, and three of the four cables released by 18 ms. However, the second cable did not release from the cable anchor bracket as desired. Minor permanent deformation was found in the cable release lever.

In test no. HTCT-3, an 1,853-lb (841-kg) bogie vehicle impacted the cable end terminal at a speed of 51.1 mph (82.2 km/h) and an angle of 25 degrees. All cables released from the cable anchor bracket and the cable release lever was retained. However, the cable release times were later than desired and likely contributed to the bogie vehicle becoming airborne and subsequently rolling. Significant permanent deformation was found in the cable release lever.

17. Document Analysis/Descriptors Highway Safety, Crash Test, Roadside Appurtenances, Cable Barrier, End Terminal, High Tension		18. Availability Statement No restrictions. Document available from: National Technical Information Services, Springfield, Virginia 22161	
19. Security Class (this report) Unclassified	20. Security Class (this page) Unclassified	21. No. of Pages 85	22. Price

DISCLAIMER STATEMENT

This report was completed with funding from the Federal Highway Administration, U.S. Department of Transportation. The contents of this report reflect the views and opinions of the authors who are responsible for the facts and the accuracy of the data presented herein. The contents do not necessarily reflect the official views or policies of the state highway departments participating in the Midwest States Regional Pooled Fund Program nor the Federal Highway Administration, U.S. Department of Transportation. This report does not constitute a standard, specification, regulation, product endorsement, or an endorsement of manufacturers.

UNCERTAINTY OF MEASUREMENT STATEMENT

The Midwest Roadside Safety Facility (MwRSF) has determined the uncertainty of measurements for several parameters involved in standard full-scale crash testing and non-standard testing of roadside safety features. Information regarding the uncertainty of measurements for critical parameters is available upon request by the sponsor and the Federal Highway Administration. Test nos. HTCT-2 and HTCT-3 were non-certified component tests conducted for research and development purposes only.

ACKNOWLEDGEMENTS

The authors wish to acknowledge several sources that made a contribution to this project: (1) the Midwest States Regional Pooled Fund Program funded by the Illinois Department of Transportation, Iowa Department of Transportation, Kansas Department of Transportation, Minnesota Department of Transportation, Missouri Department of Transportation, Nebraska Department of Roads, Ohio Department of Transportation, South Dakota Department of Transportation, Wisconsin Department of Transportation, and Wyoming Department of Transportation for sponsoring this project; and (2) MwRSF personnel for constructing the barriers and conducting the crash tests.

Acknowledgement is also given to the following individuals who made a contribution to the completion of this research project.

Midwest Roadside Safety Facility

J.C. Holloway, M.S.C.E., E.I.T., Test Site Manager
K.A. Lechtenberg, M.S.M.E., E.I.T., Research Associate Engineer
R.W. Bielenberg, M.S.M.E., E.I.T., Research Associate Engineer
S.K. Rosenbaugh, M.S.C.E., E.I.T., Research Associate Engineer
C.S. Stolle, Ph.D., E.I.T., Post-Doctoral Research Associate
A.T. Russell, B.S.B.A., Shop Manager
K.L. Krenk, B.S.M.A., Maintenance Mechanic
S.M. Tighe, Laboratory Mechanic
D.S. Charroin, Laboratory Mechanic
Undergraduate and Graduate Research Assistants

Illinois Department of Transportation

David Piper, P.E., Safety Implementation Engineer (Retired)
Priscilla A. Tobias, P.E., State Safety Engineer/Bureau Chief
Tim Sheehan, P.E., Safety Design Engineer

Iowa Department of Transportation

David Little, P.E., Assistant District Engineer
Deanna Maifield, P.E., Methods Engineer
Chris Poole, P.E., Roadside Safety Engineer

Kansas Department of Transportation

Ron Seitz, P.E., Bureau Chief
Rod Lacy, P.E., Metro Engineer
Scott King, P.E., Road Design Leader

Minnesota Department of Transportation

Michael Elle, P.E., Design Standard Engineer

Missouri Department of Transportation

Joseph G. Jones, P.E., Engineering Policy Administrator

Nebraska Department of Roads

Phil TenHulzen, P.E., Design Standards Engineer
Jodi Gibson, Research Coordinator

Ohio Department of Transportation

Michael Bline, P.E., Standards and Geometrics Engineer
Maria E. Ruppe, P.E., Roadway Standards Engineer

South Dakota Department of Transportation

David Huft, Research Engineer
Bernie Clocksin, Lead Project Engineer

Wisconsin Department of Transportation

Jerry Zogg, P.E., Chief Roadway Standards Engineer
Erik Emerson, P.E., Standards Development Engineer

Wyoming Department of Transportation

William Wilson, P.E., Architectural and Highway Standards Engineer

Federal Highway Administration

John Perry, P.E., Nebraska Division Office
Danny Briggs, Nebraska Division Office

TABLE OF CONTENTS

TECHNICAL REPORT DOCUMENTATION PAGE i

DISCLAIMER STATEMENT ii

UNCERTAINTY OF MEASUREMENT STATEMENT ii

ACKNOWLEDGEMENTS iii

TABLE OF CONTENTS v

LIST OF FIGURES vi

LIST OF TABLES viii

1 INTRODUCTION 1
- 1.1 Background 1
- 1.2 Objectives 3
- 1.3 Scope 3

2 DESIGN DETAILS 4
- 2.1 Cable Anchor Bracket Assemblies 4
- 2.2 Line Posts 5
- 2.3 System Cables 5

3 COMPONENT TEST CONDITIONS 26
- 3.1 Scope 26
- 3.2 Equipment and Instrumentation 26
  - 3.2.1 Bogie 26
  - 3.2.2 Accelerometers 27
  - 3.2.3 Optical Speed Trap 28
  - 3.2.4 Digital Photography 28
- 3.3 Data Processing 29

4 COMPONENT TESTING RESULTS AND DISCUSSION 31
- 4.1 Results 31
  - 4.1.1 Test No. HTCT-2 31
  - 4.1.2 Test No. HTCT-3 43
- 4.2 Discussion 53

5 SUMMARY, CONCLUSIONS, AND RECOMMENDATIONS 54

6 REFERENCES 56

7 APPENDICES 57
- Appendix A. Material Specifications 58
- Appendix B. Bogie Test Results 80

LIST OF FIGURES

Figure 1. Cable End Terminal Systems 1
Figure 2. Bogie Testing Matrix and Setup, Test No. HTCT-2 7
Figure 3. Bogie Testing Matrix and Setup, Test No. HTCT-3 8
Figure 4. Cable Anchor Assembly Detail View, Test Nos. HTCT-2 and HTCT-3 9
Figure 5. Cable Anchor Anchorage Detail, Test Nos. HTCT-2 and HTCT-3 10
Figure 6. Cable Anchor Bracket Details, Test Nos. HTCT-2 and HTCT-3 11
Figure 7. Cable Release Lever Assembly Details, Test Nos. HTCT-2 and HTCT-3 12
Figure 8. Cable Anchor Bracket Component Details, Test Nos. HTCT-2 and HTCT-3 13
Figure 9. Cable Anchor Bracket Component Details, Test Nos. HTCT-2 and HTCT-3 14
Figure 10. Cable Release Lever Component Details, Test Nos. HTCT-2 and HTCT-3 15
Figure 11. Post Nos. 2 and 9 Details, Test Nos. HTCT-2 and HTCT-3 16
Figure 12. Terminal Posts with Hook Bolts Details, Test Nos. HTCT-2 and HTCT-3 17
Figure 13. Terminal Post Details, Test Nos. HTCT-2 and HTCT-3 18
Figure 14. Cable End Assembly and Cable Splice Assembly Details, Test Nos. HTCT-2 and HTCT-3 19
Figure 15. Bill of Materials, Test No. HTCT-2 20
Figure 16. Bill of Materials, Test No. HTCT-2 21
Figure 17. Bill of Materials, Test No. HTCT-3 22
Figure 18. Bill of Materials, Test No. HTCT-3 23
Figure 19. System Photographs, Test No. HTCT-2 24
Figure 20. System Photographs, Test No. HTCT-3 25
Figure 21. Rigid Frame Bogie on Guidance Track 27
Figure 22. Impact Location, Test No. HTCT-2 31
Figure 23. Cable Numbers at Upstream Cable Anchor Bracket, Test No. HTCT-2 32
Figure 24. Sequential Photographs, Test No. HTCT-2 35
Figure 25. Sequential Photographs, Test No. HTCT-2 36
Figure 26. Sequential Photographs, Test No. HTCT-2 37
Figure 27. System Damage – Upstream Cable Anchor Bracket, Test No. HTCT-2 38
Figure 28. System Damage – Post Nos. 2 through 5, Test No. HTCT-2 39
Figure 29. System Damage – Post nos. 6 through 9, Test No. HTCT-2 40
Figure 30. System Damage – Downstream Cable Anchor Bracket, Test No. HTCT-2 41
Figure 31. Force vs. Time, Test No. HTCT-2 42
Figure 32. Impact Location, Test No. HTCT-3 43
Figure 33. Cable Numbers at Upstream End Terminal, Test No. HTCT-3 44
Figure 34. Sequential Photographs, Test No. HTCT-3 46
Figure 35. Sequential Photographs, Test No. HTCT-3 47
Figure 36. Documentary Photographs, Test No. HTCT-3 48
Figure 37. Documentary Photographs, Test No. HTCT-3 49
Figure 38. System Damage – Overall and Upstream Cable Anchor Bracket, Test No. HTCT-3 50
Figure 39. System Damage – Posts and Downstream Cable Anchor Bracket, Test No. HTCT-3 51
Figure 40. Bogie Damage, Test No. HTCT-3 52
Figure 41. Force vs. Time, Test No. HTCT-3 52
Figure A-1. Bill of Materials, Test No. HTCT-2 59
Figure A-2. Bill of Materials, Test No. HTCT-3 60
Figure A-3. Anchor Bracket and Release Lever Assemblies, Test Nos. HTCT-2 and HTCT-3 .. 61

Figure A-4. Anchor Bracket and Release Lever Assemblies, Test Nos. HTCT-2 and HTCT-3.. 62
Figure A-5. Anchor Bracket and Release Lever Assemblies, Test Nos. HTCT-2 and HTCT-3.. 63
Figure A-6. Anchor Bracket and Release Lever Assemblies, Test Nos. HTCT-2 and HTCT-3.. 64
Figure A-7. Anchor Bracket and Release Lever Assemblies, Test Nos. HTCT-2 and HTCT-3.. 65
Figure A-8. ¾-in. (19-mm) Diameter Nuts and Washers, Test Nos. HTCT-2 and HTCT-3..... 66
Figure A-9. ¾-in. (19-mm) Diameter Threaded Rod, Test Nos. HTCT-2 and HTCT-3..... 67
Figure A-10. ¾-in. (19-mm) Diameter Threaded Rod, Test Nos. HTCT-2 and HTCT-3..... 68
Figure A-11. ¾-in. (19-mm) Diameter Threaded Rod, Test Nos. HTCT-2 and HTCT-3..... 69
Figure A-12. ¾-in. (19-mm) Diameter Threaded Rod, Test Nos. HTCT-2 and HTCT-3..... 70
Figure A-13. ¾-in. (19-mm) Diameter Threaded Rod, Test Nos. HTCT-2 and HTCT-3..... 71
Figure A-14. S3x5.7 Line Posts, Test Nos. HTCT-2 and HTCT-3 72
Figure A-15. Cable Hook Bolts, Test No. HTCT-2..... 73
Figure A-16. ¾-in. (19-mm) Dia. 3x7 Cable Guiderail, Test Nos. HTCT-2 and HTCT-3 74
Figure A-17. ⅞-in. (22.2-mm) Dia. Cable End Assembly, Test Nos. HTCT-2 and HTCT-3..... 75
Figure A-18. ⅞-in. (22.2-mm) Dia. Cable End Assembly, Test Nos. HTCT-2 and HTCT-3..... 76
Figure A-19. ⅞-in. (22.2-mm) Dia. Cable End Assembly, Test Nos. HTCT-2 and HTCT-3..... 77
Figure A-20. ⅞-in. (22.2-mm) Dia. Cable End Assembly, Test Nos. HTCT-2 and HTCT-3..... 78
Figure A-21. ⅞-in. (22.2-mm) Dia. Cable End Assembly, Test Nos. HTCT-2 and HTCT-3..... 79
Figure B-1. Test No. HTCT-2 Results (EDR-3)..... 81
Figure B-2. Test No. HTCT-2 Results (SLICE)..... 82
Figure B-3. Test No. HTCT-3 Results (EDR-3)..... 83
Figure B-4. Test No. HTCT-3 Results (SLICE)..... 84

LIST OF TABLES

Table 1. Video Cameras and Locations in Dynamic Component Tests 29
Table 2. Sequential Description of Impact Events, Test No. HTCT-2 32
Table 3. Peak Forces During Post Impacts, Test No. HTCT-2 42
Table 4. Sequential Description of Impact Events, Test No. HTCT-3 44

1 INTRODUCTION

1.1 Background

A three-cable, low-tension end terminal system, shown in Figure 1a, was previously developed and successfully tested at the Midwest Roadside Safety Facility [1] according to the safety performance criteria specified in the National Cooperative Highway Research Program (NCHRP) Report No. 350 [2]. The low-tension end terminal system was modified to add a fourth cable, shown in Figure 1b, during the development of a four-cable, high-tension cable median barrier [3-5]. However, the high-tension end terminal was never subjected to full-scale crash testing according to the safety performance criteria specified in NCHRP Report No. 350 or the current *Manual for Assessing Safety Hardware* (MASH) [6].

(a) 3-cable, low-tension (b) 4-cable, high-tension

Figure 1. Cable End Terminal Systems

A dynamic bogie test, test no. HTCT-1, was conducted on the high-tension end terminal system at a velocity of 44.9 mph (72.3 km/h) and at an angle of 0 degrees, or end-on to the system [7]. Several things were noted from this testing:

(1) All four cables released by 18 ms after impact;

(2) The notched cable plate, which held the cables in place, sustained permanent deformation;

(3) The cables wrapped around the cable release lever and pulled it downstream; and

(4) When the cables were tensioned, the clearance between the cable anchorage fittings was limited.

Prior testing with the low-tension end terminal showed the cables released approximately 8 ms after impact [1]. While the 18 ms release times seen in test no. HTCT-1 did not produce an undesirable behavior, a quicker release time, similar to the 8 ms seen in the low-tension cable end terminal tests, was desired.

Prior testing also demonstrated that the cable release lever could potentially become a tripping hazard for the vehicle when it is pulled downstream by the cables and may cause vehicle instabilities [1]. Therefore, it was important that the cables did not wrap about the release lever and that the lever was retained on the cable anchor bracket in an end-on or angled impact on the upstream end terminal.

According to AASHTO's *Standard Specifications for Structural Supports for Highway Signs, Luminaires, and Traffic Signals*, substantial remains of breakaway supports shall not project more than 4 in. above groundline, so that a car can easily traverse above any remaining stub. MASH does not have any requirements for the stub height of fixed supports. While the cable anchor bracket assembly is not technically a breakaway support, the fixed anchor portion of the assembly could potentially cause vehicle instabilities due to undercarriage snag or wheel

override if the anchor stub is too high. Therefore, the height of the bracket was reduced to 4 in. (102 mm) to conform to the AASHTO specification.

Eliminating permanent deformations in the anchor bracket and release lever and adding more clearance around the cable anchorage fittings were also desired. So, the cable end terminal was redesigned in a prior project, and finite element analysis demonstrated that the new end terminal design met the desired goals [7].

1.2 Objectives

The objective was to determine through dynamic testing if the performance of the redesigned high-tension end terminal system met all of the desired goals: quick cable release times, cable release lever retained in anchor bracket when impacted, no permanent deformation, stub height below 4 in. (102 mm), and more clearance around the cable anchorage fittings.

1.3 Scope

Two dynamic bogie tests were conducted on the high-tension cable end terminal. The first test had a targeted impact speed of 45 mph (72 km/h) oriented end-on to the terminal (i.e. 0 degree impact). The second test had a targeted impact speed and angle of 45 mph (72 km/h) and 25 degrees, respectively. A summary, discussion, and conclusions of the dynamic tests were provided.

2 DESIGN DETAILS

The cable barrier system consisted of three main components: (1) cable anchor bracket assemblies; (2) line posts; and (3) system cables. Descriptions of each of these assemblies are in the following sections. System details are shown in Figures 2 through 18. System photographs are shown in Figures 19 and 20 for test nos. HTCT-2 and HTCT-3, respectively. Material specifications, mill certifications, and certificates of conformity for the end terminal systems are shown in Appendix A.

2.1 Cable Anchor Bracket Assemblies

The cable anchor bracket assemblies consisted of several components. The cable release lever consisted of two 20-in. (508-mm) long, 1½-in. x 1½-in. x ¼-in. (38-mm x 38-mm x 6.35-mm) thick steel vertical tubes welded to a $4^{7}/_{16}$ in. x 17½-in. x ⅝-in. (113-mm x 445-mm x 16-mm) thick steel kick plate. The horizontal cross member that was previously between the vertical tubes was removed to keep the cables from wrapping around the cable release lever.

Two ½-in. (12.7-mm) thick rotation support brackets were welded to the underside of the kick plate. A ¾-in. (19-mm) diameter threaded rod with a washer and nut on each end was inserted through the rotation support brackets. The ¾-in. (19-mm) diameter threaded rod was then inserted into a slot in the cable anchor assembly. This created a joint that allowed the cable release lever to rotate, but still be retained within the cable anchor bracket.

The cable anchor bracket consisted of a 10¼-in. x 19¾-in. x ½-in. (260-mm x 502-mm x 12.7-mm) thick steel baseplate with a 3⅝-in. x 19¾-in. x ⅝-in. (92-mm x 502-mm x 16-mm) thick steel cable plate welded at a 65-degree angle. Four 1⅛-in. (28.58-mm) diameter notches were cut into the cable plate in order to secure the cables to the assembly. A ½-in. (12.7-mm) thick gusset was welded to the cable plate and base plate on each side of the cable notches.

The cable anchor brackets were secured to the testing surface using eight ¾-in. (19.05-mm) diameter ASTM A193 Grade B7 threaded rods with hex nuts and washers. The threaded rods were epoxied 12-in. (305-mm) into the concrete.

2.2 Line Posts

Weakening the line posts was explored in test no. HTCT-2 by adding holes in both flanges at groundline and by changing the post shape. Eight line posts were installed between the upstream and downstream cable anchor brackets, designated post no. 1 and post no. 10, respectively. Post no. 2 was an S3x5.7 (S76x8.5) post with a cable hangar bracket and ⅜-in. (9.53-mm) diameter weakening holes. Post nos. 3 and 6 were M6x4.4 (M152x6.5) posts without weakening holes. Post nos. 4 and 7 were S3x5.7 (S76x8.5) posts with ⅜-in. (9.53-mm) diameter weakening holes. Post nos. 5 and 8 were S3x5.7 (S76x8.5) posts with ⅝-in. (15.88-mm) diameter weakening holes. Post no. 9 was an S3x5.7 (S76x8.5) post with a cable hangar bracket and ⅝-in. (15.88-mm) diameter weakening holes.

In test no. HTCT-3, only two line posts were installed between the upstream and downstream cable anchor brackets, designated post no. 1 and post no. 4, respectively. Post no. 2 was an S3x5.7 (S76x8.5) post with a cable hangar bracket and ⅜-in. (9.53-mm) diameter weakening holes. Post no. 3 was an S3x5.7 (S76x8.5) post with a cable hangar bracket and ⅝-in. (15.88-mm) diameter weakening holes. The line posts in test nos. HTCT-2 and HTCT-3 were embedded 18 in. (457 mm) in 4-in. (102-mm) diameter holes that were cored in the concrete tarmac.

2.3 System Cables

Four ¾-in. (19.1-mm) diameter, 3x7 wire rope cables were used in the barrier system. The cables were tightened to approximately 4,200 lb (18.7 kN) through the use of cable turnbuckles. The ends of the cable contained ⅞-in. (22-mm) diameter threaded rod fittings that

terminated in the cable anchor bracket. Each threaded rod was secured in the cable plate notches with a 3-in. x 2⅜-in. x ½-in. (76-mm x 60-mm x 12.7-mm) thick plate washer and two heavy hex nuts.

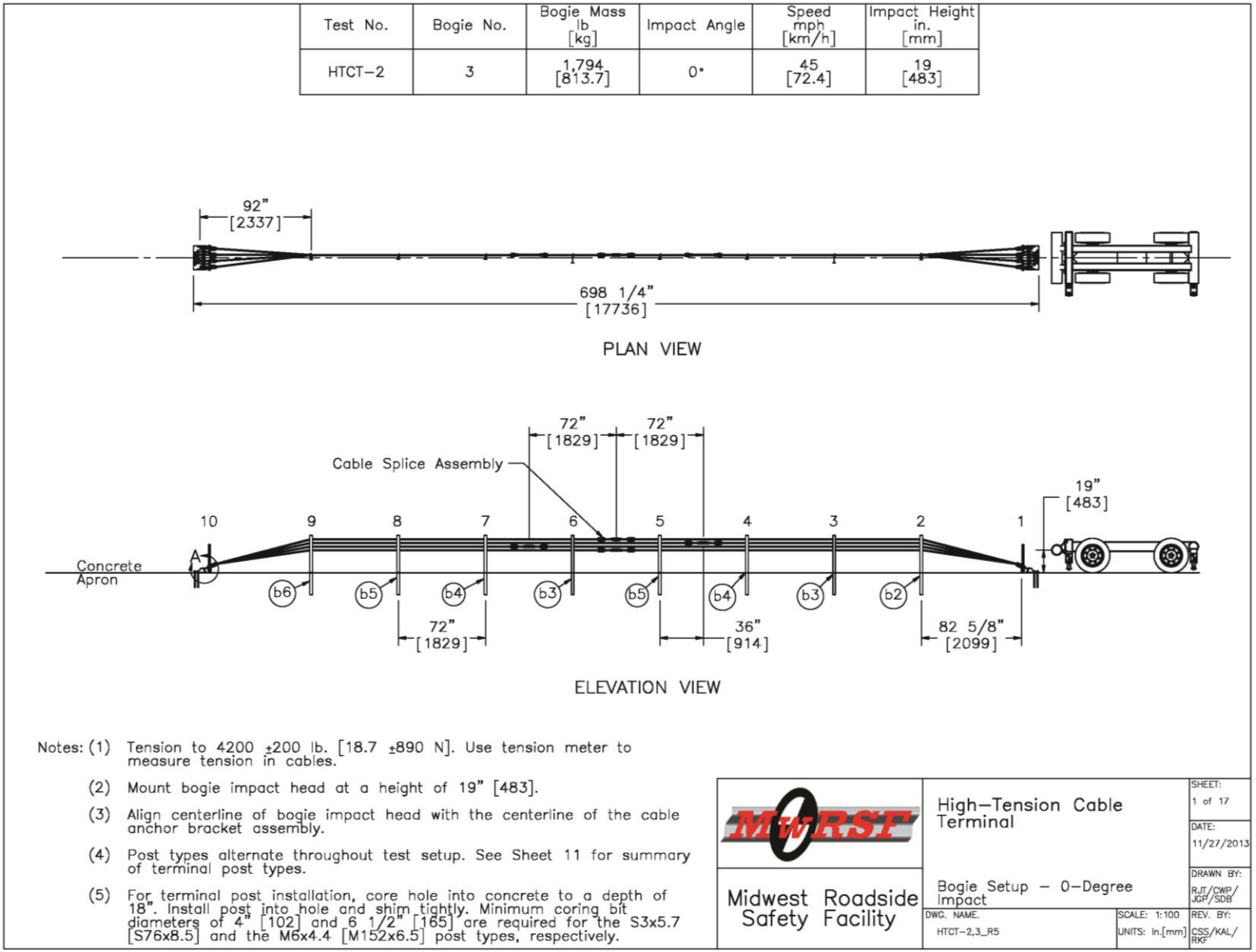

Figure 2. Bogie Testing Matrix and Setup, Test No. HTCT-2

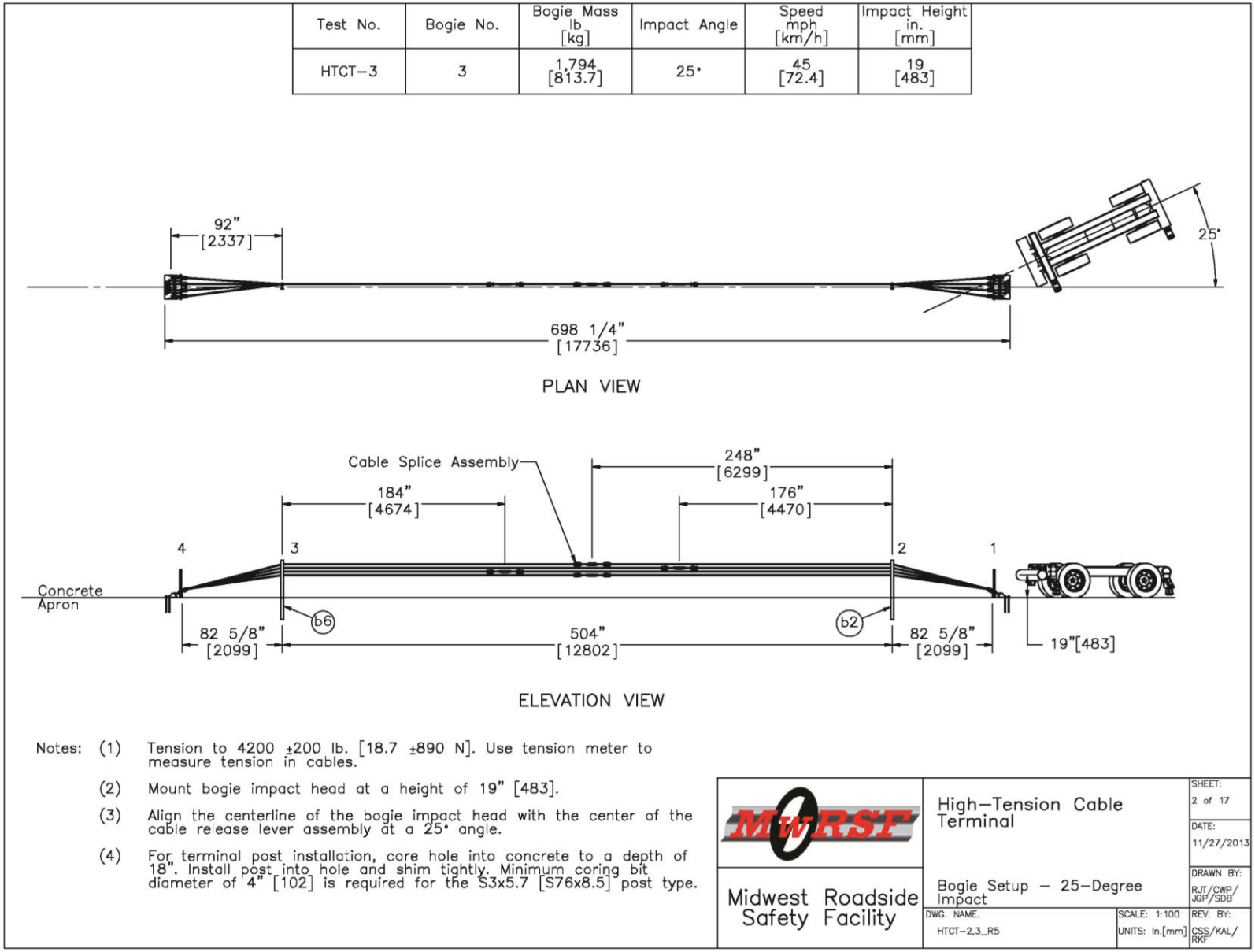

Figure 3. Bogie Testing Matrix and Setup, Test No. HTCT-3

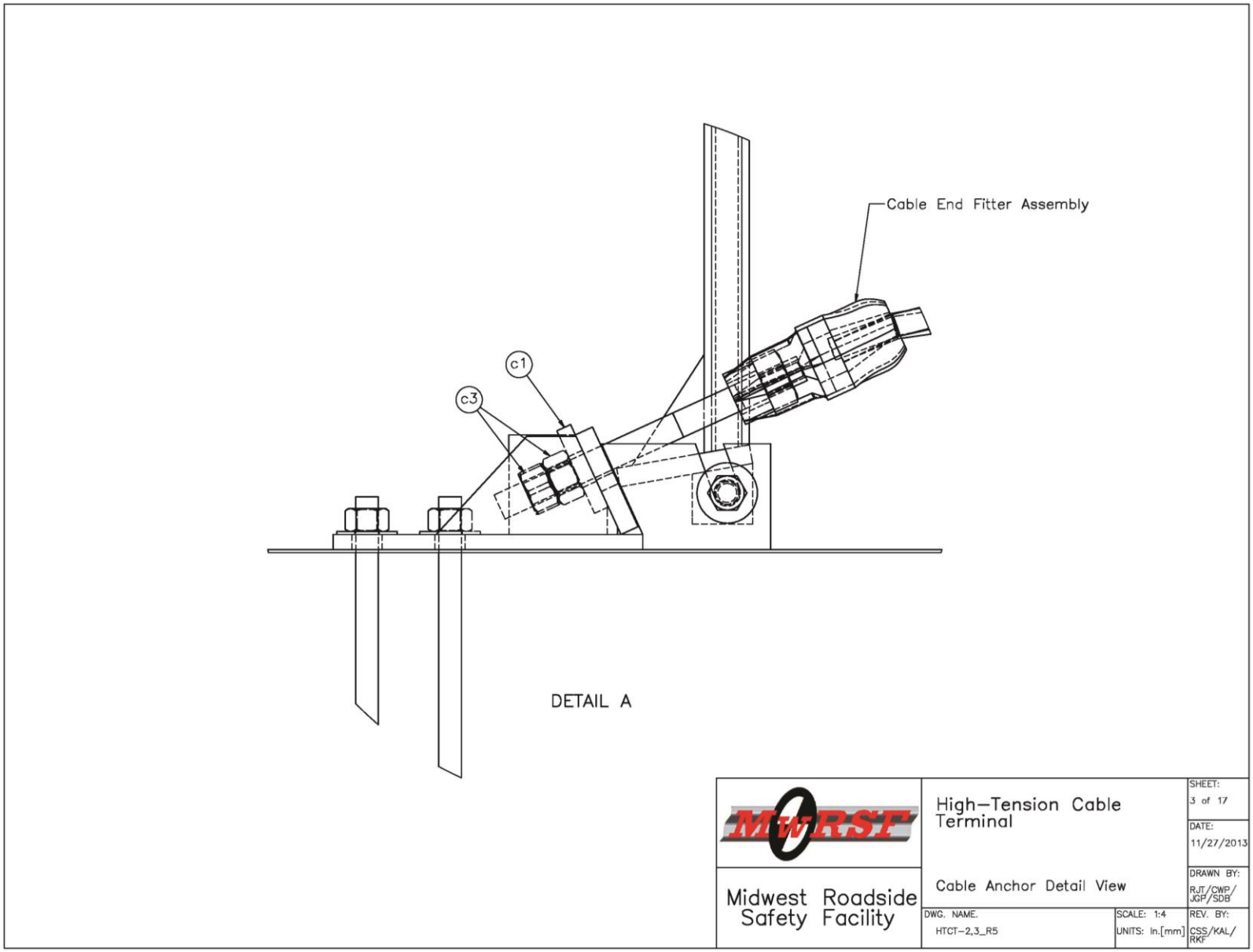

Figure 4. Cable Anchor Assembly Detail View, Test Nos. HTCT-2 and HTCT-3

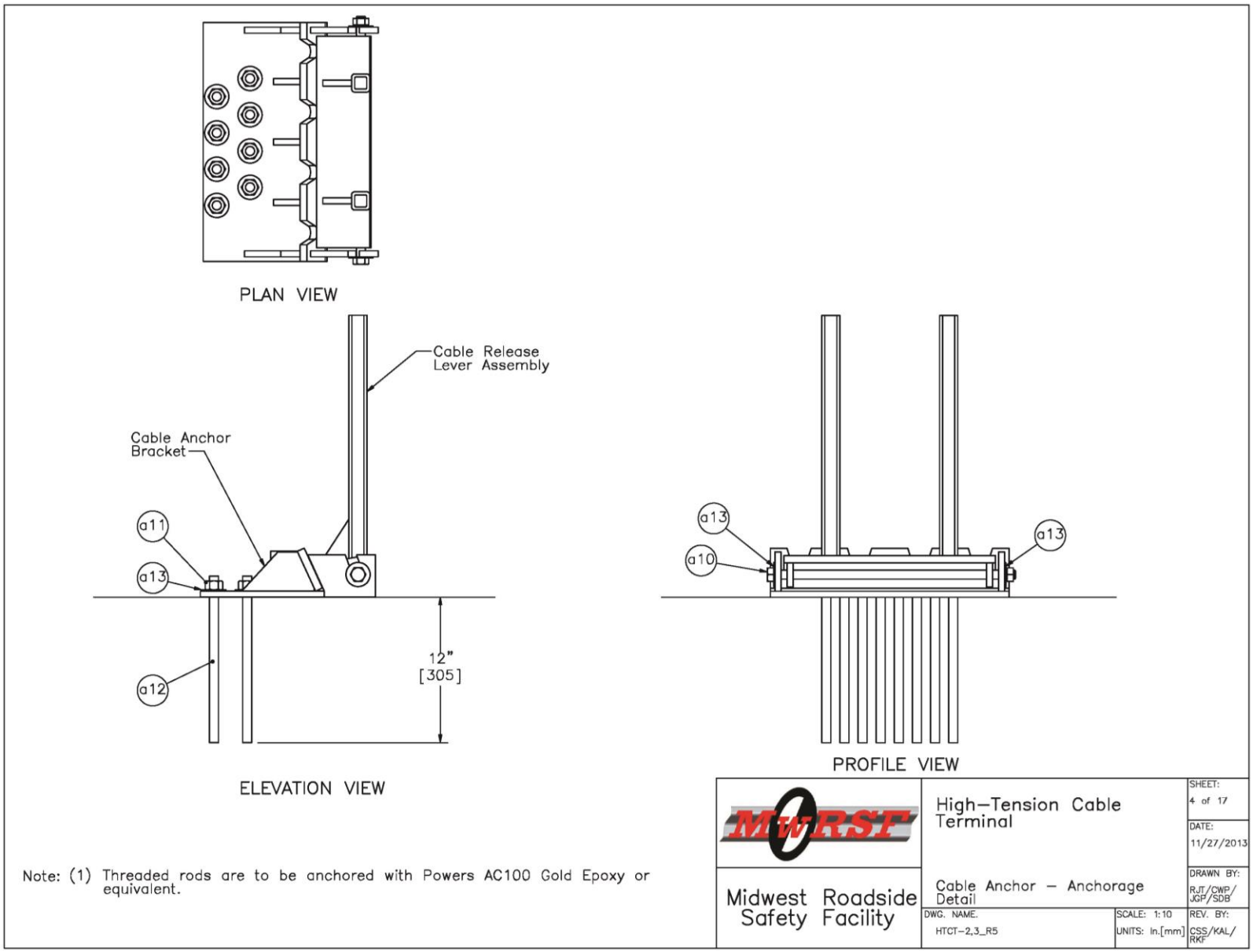

Figure 5. Cable Anchor Anchorage Detail, Test Nos. HTCT-2 and HTCT-3

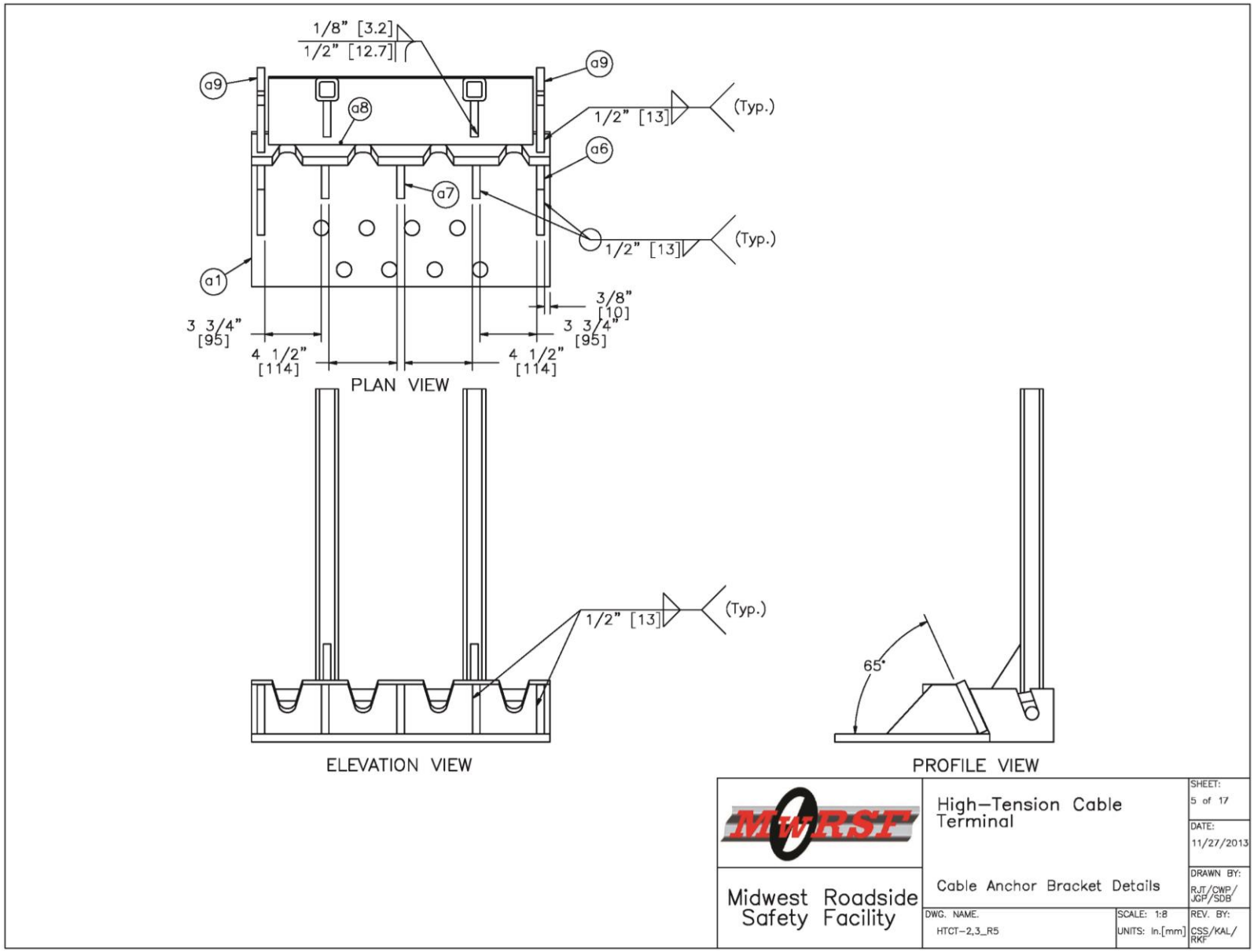

Figure 6. Cable Anchor Bracket Details, Test Nos. HTCT-2 and HTCT-3

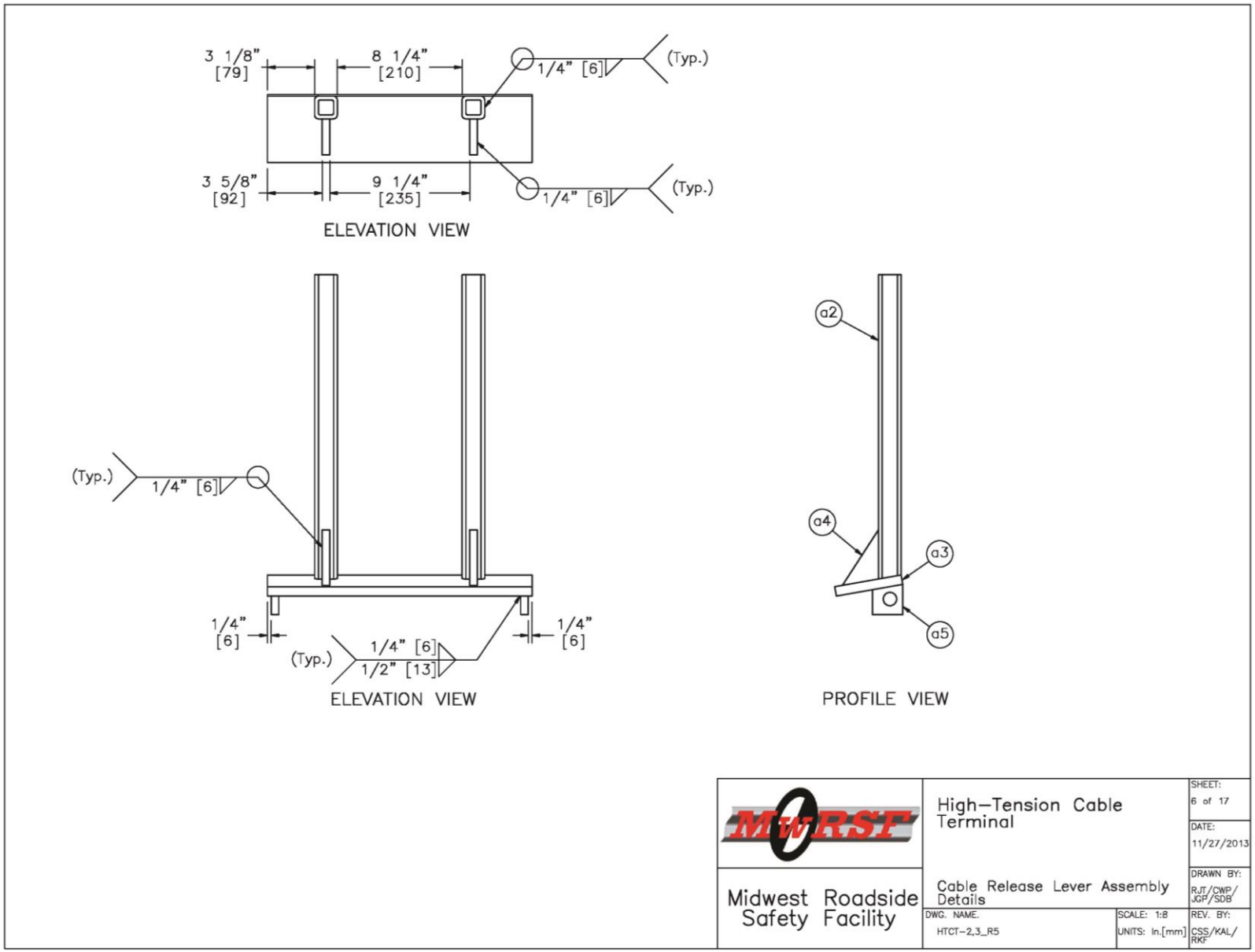

Figure 7. Cable Release Lever Assembly Details, Test Nos. HTCT-2 and HTCT-3

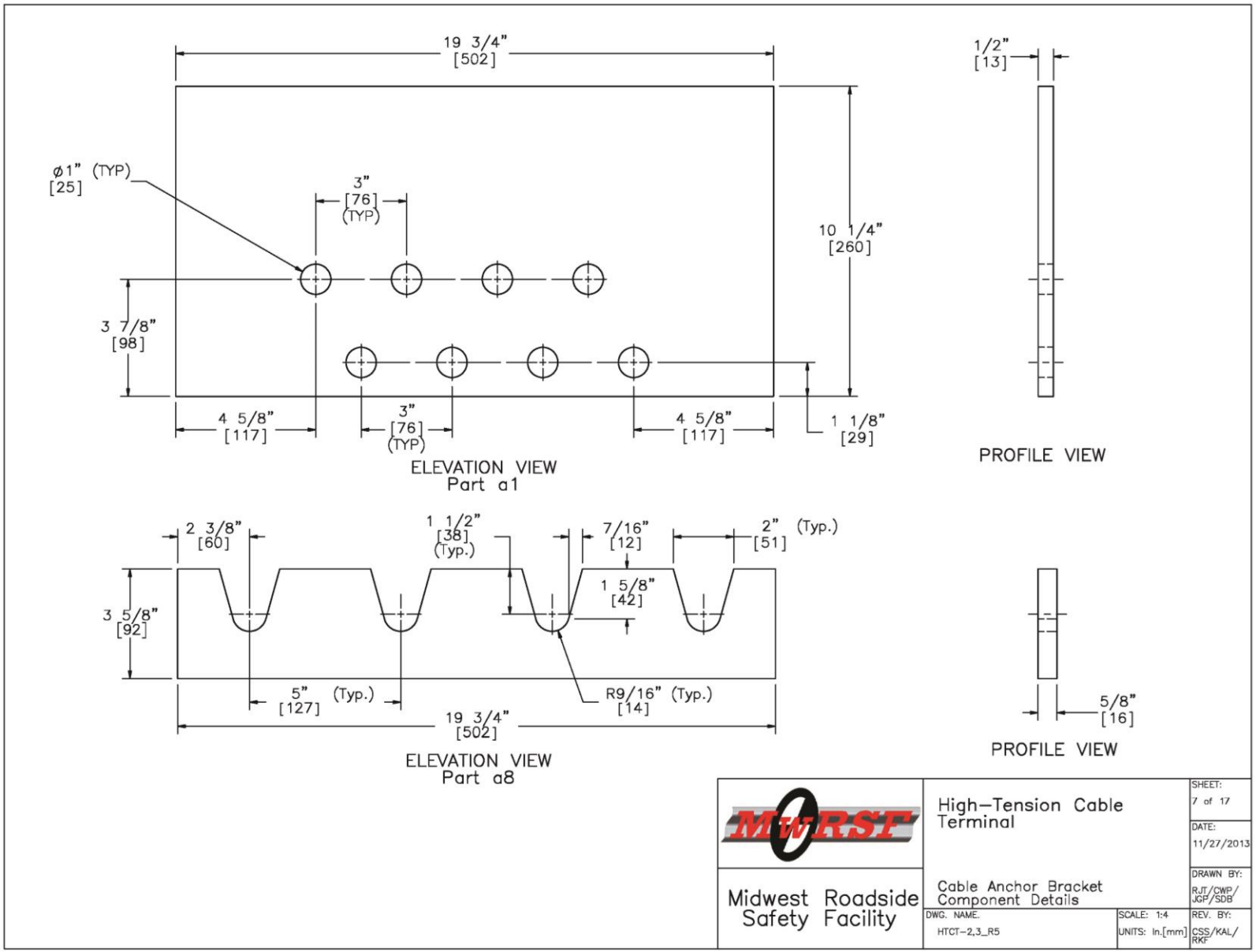

Figure 8. Cable Anchor Bracket Component Details, Test Nos. HTCT-2 and HTCT-3

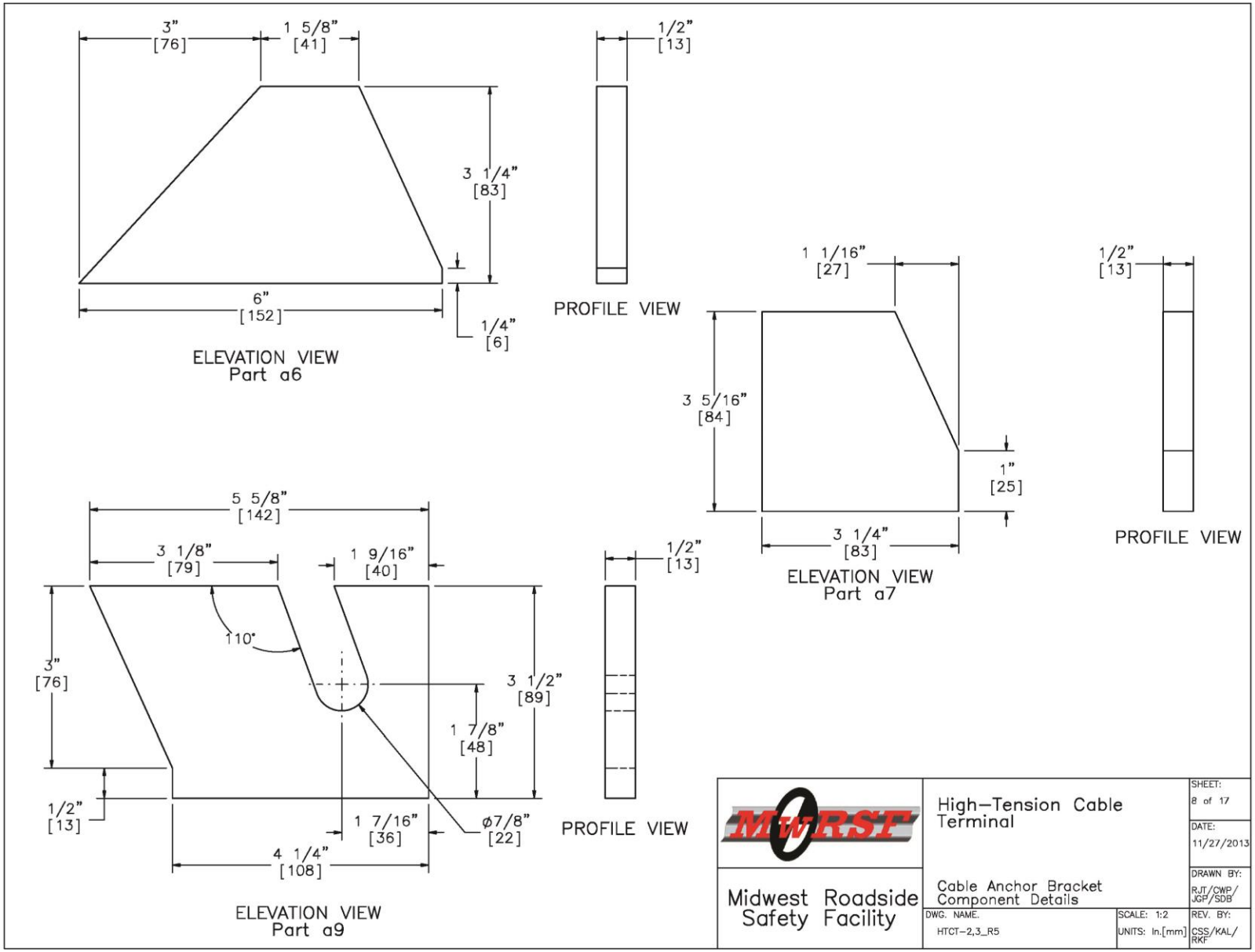

Figure 9. Cable Anchor Bracket Component Details, Test Nos. HTCT-2 and HTCT-3

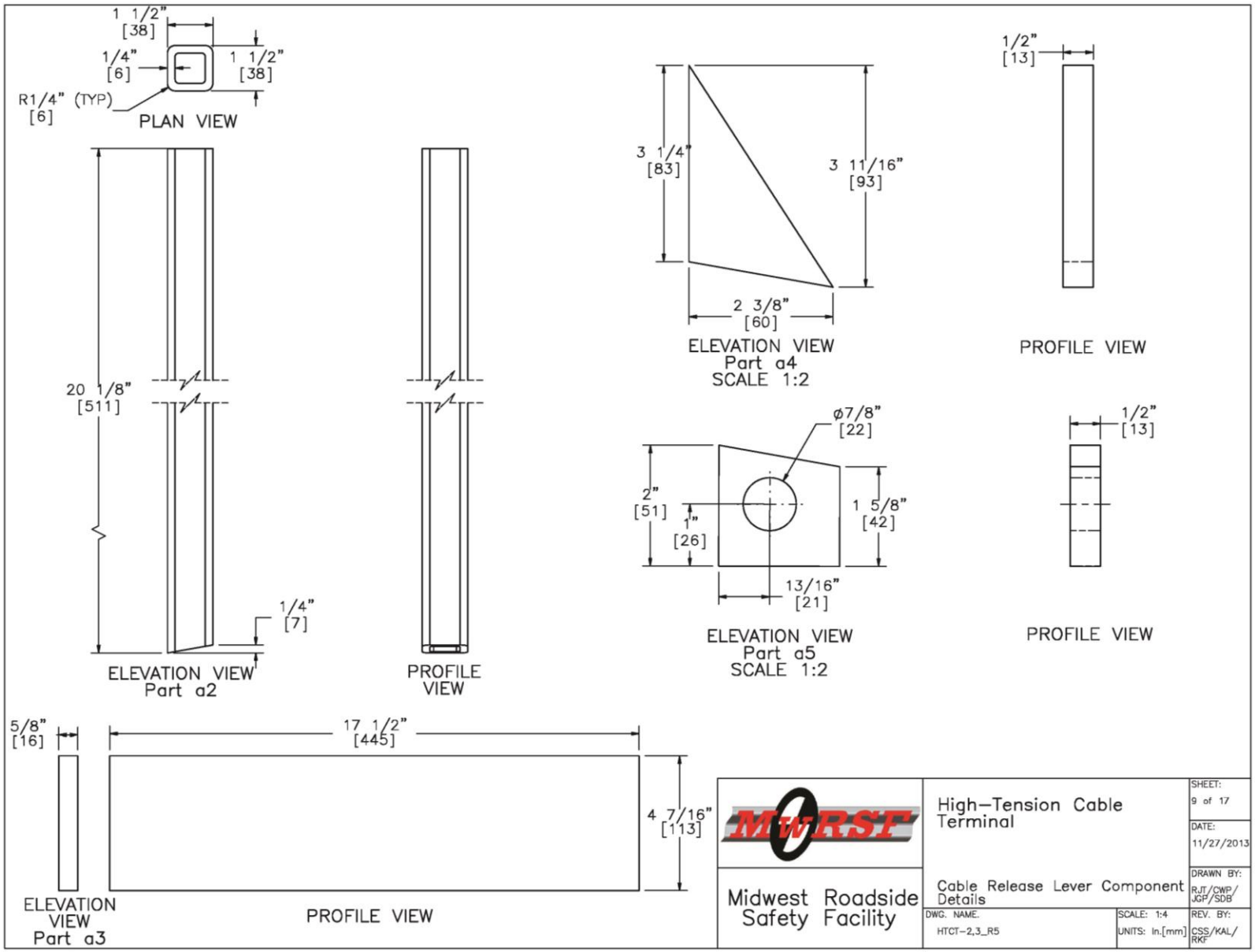

Figure 10. Cable Release Lever Component Details, Test Nos. HTCT-2 and HTCT-3

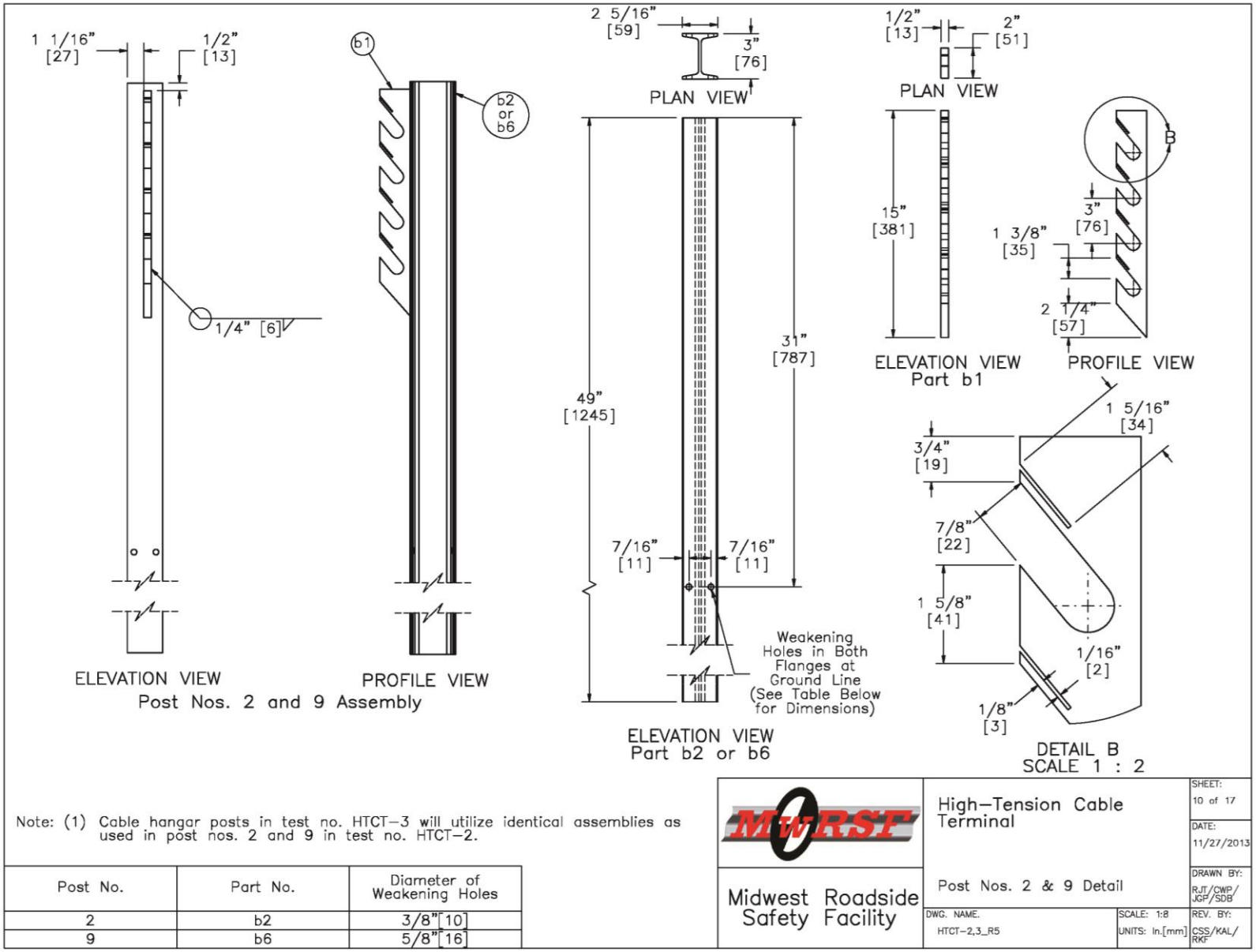

Figure 11. Post Nos. 2 and 9 Details, Test Nos. HTCT-2 and HTCT-3

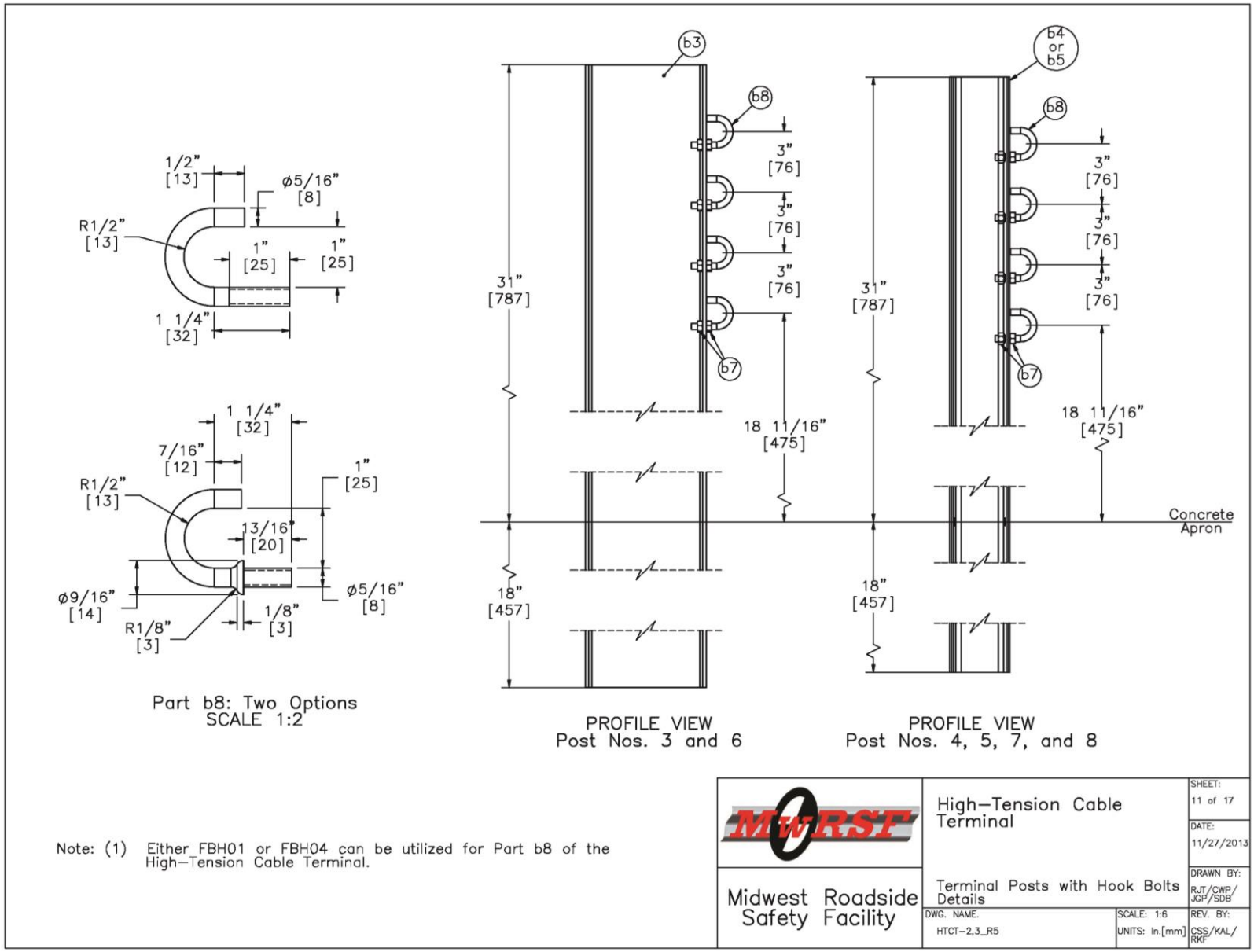

Figure 12. Terminal Posts with Hook Bolts Details, Test Nos. HTCT-2 and HTCT-3

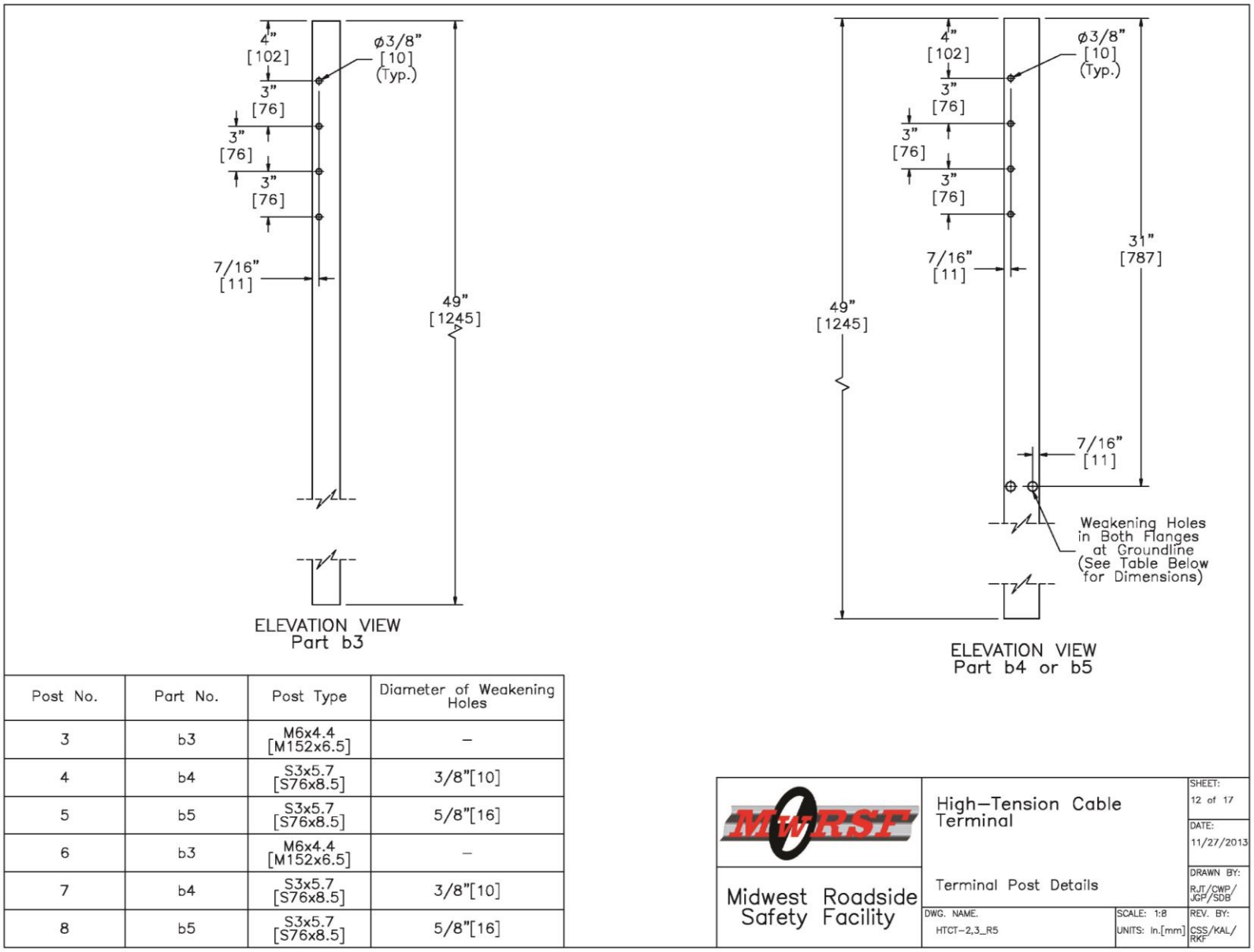

Post No.	Part No.	Post Type	Diameter of Weakening Holes
3	b3	M6x4.4 [M152x6.5]	–
4	b4	S3x5.7 [S76x8.5]	3/8"[10]
5	b5	S3x5.7 [S76x8.5]	5/8"[16]
6	b3	M6x4.4 [M152x6.5]	–
7	b4	S3x5.7 [S76x8.5]	3/8"[10]
8	b5	S3x5.7 [S76x8.5]	5/8"[16]

Midwest Roadside Safety Facility

High–Tension Cable Terminal

Terminal Post Details

SHEET: 12 of 17
DATE: 11/27/2013
DRAWN BY: RJT/CWP/JGP/SDB
REV. BY: CSS/KAL/RKF
DWG. NAME. HTCT–2,3_R5
SCALE: 1:8
UNITS: In.[mm]

Figure 13. Terminal Post Details, Test Nos. HTCT-2 and HTCT-3

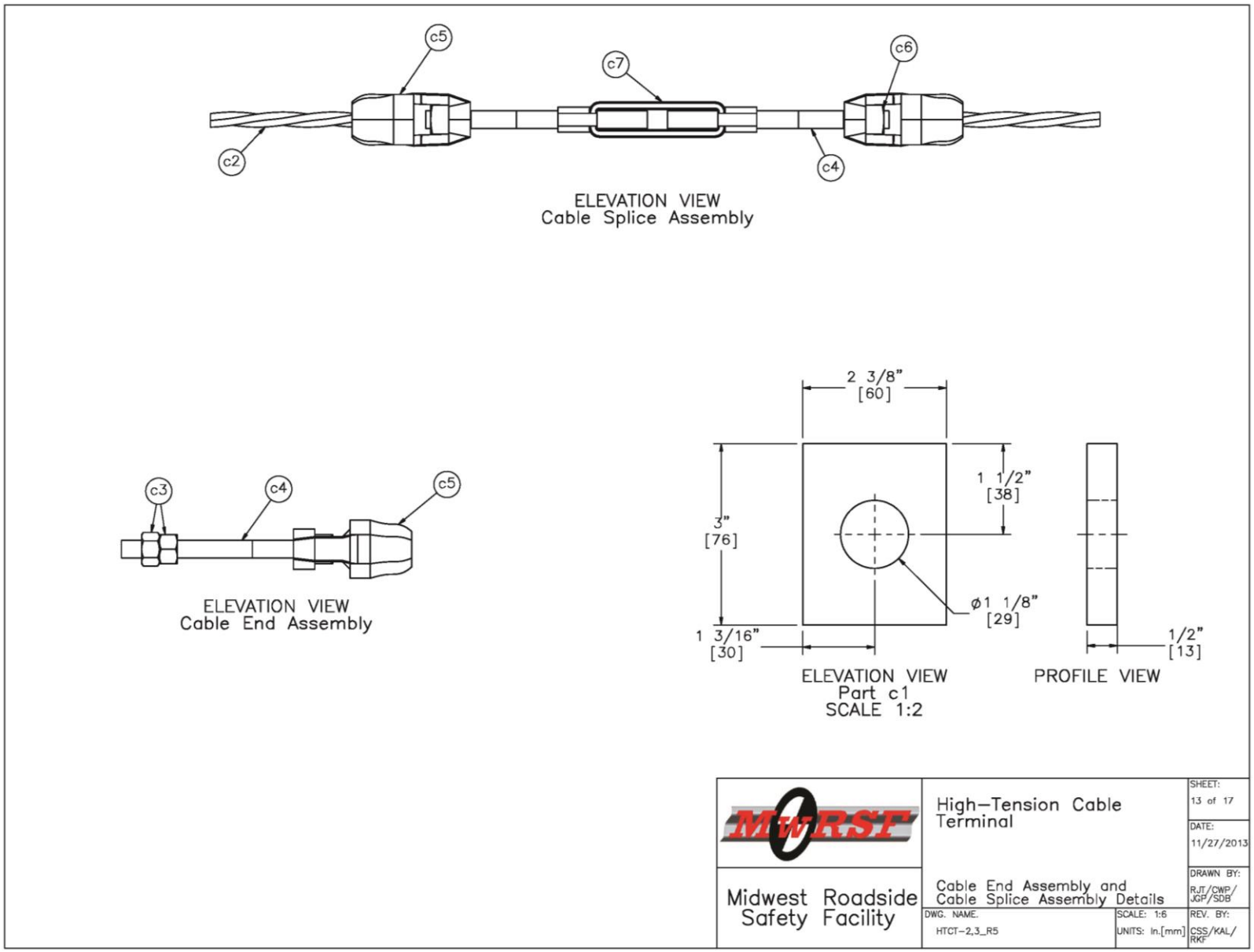

Figure 14. Cable End Assembly and Cable Splice Assembly Details, Test Nos. HTCT-2 and HTCT-3

Item No.	QTY.	Description	Material Specifications	Hardware Guide
a1	2	Cable Anchor Bracket Base Plate, 19 3/4" x 10 1/4" x 1/2" [502 x 260 x 12.7]	ASTM A36 Steel	–
a2	4	Cable Release Lever Impact Tube, 1 1/2" x 1 1/2" x 1/4" [38 x 38 x 6.4]	ASTM A500 Gr. B	–
a3	2	Cable Release Lever Base Plate, 17 1/2" x 4 7/16" x 5/8" [445 x 113 x 15.9]	ASTM A36 Steel	–
a4	4	Cable Release Lever Support Gusset, 3 11/16" x 2 3/8" x 1/2" [93 x 60 x 12.7]	ASTM A36 Steel	–
a5	4	Cable Release Lever Rotation Bracket, 2" x 2" x 1/2" [51 x 51 x 12.7]	ASTM A36 Steel	–
a6	4	Cable Anchor Bracket Exterior Gusset, 6" x 3 1/4" x 1/2" [152 x 83 x 12.7]	ASTM A36 Steel	–
a7	6	Cable Anchor Bracket Interior Gusset, 3 5/16" x 3 1/4" x 1/2" [84 x 83 x 12.7]	ASTM A36 Steel	–
a8	2	Cable Anchor Bracket Cable Plate, 19 3/4" x 3 5/8" x 5/8" [502 x 92 x 15.9]	ASTM A36 Steel	–
a9	4	Cable Anchor Bracket Rotation Bracket, 5 5/8" x 3 1/2" x 1/2" [142 x 89 x 12.7]	ASTM A36 Steel	–
a10	2	3/4" [19] Dia. UNC, 20" [508] Long Hex Bolt* and Nut	ASTM A307	
a11	16	3/4" [19] Dia. UNC Heavy Hex Nut	ASTM A563 Gr. A	–
a12	16	3/4" [19] Dia. UNC, 13 3/4" [349] Long Threaded Rod	ASTM A449/ASTM A193 Gr. B7 Galv. or Stainless/SAE Gr. 5	–
a13	20	3/4" [19] Dia. Plain Round Washer	ASTM F844/ SAE Gr. 2	FWC20a

* A 22" [559] long threaded rod may be substituted for the part no. a10 if necessary. Use of threaded will require two extra hex nuts and flat washers.

Midwest Roadside Safety Facility

High–Tension Cable Terminal

Bill of Materials
0–Degree Impact

SHEET: 14 of 17
DATE: 11/27/2013
DRAWN BY: RJT/CWP/JGP/SDB
REV. BY: CSS/KAL/RKF
DWG. NAME. HTCT–2,3_R5
SCALE: NONE
UNITS: In.[mm]

Figure 15. Bill of Materials, Test No. HTCT-2

Item No.	QTY.	Description	Material Specifications	Hardware Guide
b1	2	Cable Hanger	ASTM A36 Steel	–
b2	1	S3x5.7 [S76x8.5] Post, 49" [1245] Long (Cable Hangar and 3/8" [10] Weakening Holes)	ASTM A572 GR50–07, ASTM A709 GR50–09A, ASTM A992–06A	–
b3	2	M6x4.4 [M152x6.5] Post, 49" [1245] Long	ASTM A572 GR50–07, ASTM A709 GR50–09A, ASTM A992–06A	–
b4	2	S3x5.7 [S76x8.5] Post, 49" [1245] Long (With ø3/8" [10] Weakening Holes)	ASTM A572 GR50–07, ASTM A709 GR50–09A, ASTM A992–06A	–
b5	2	S3x5.7 [S76x8.5] Post, 49" [1245] Long (With ø5/8" [16] Weakening Holes)	ASTM A572 GR50–07, ASTM A709 GR50–09A, ASTM A992–06A	–
b6	1	S3x5.7 [S76x8.5] Post, 49" [1245] Long (Cable Hangar and 5/8" [16] Weakening Holes)	ASTM A572 GR50–07, ASTM A709 GR50–09A, ASTM A992–06A	–
b7	48	5/16" [8] Dia. UNC Hex Nut	ASTM A307	–
b8	24	Low–Tension, Cable Hook Bolt or Shouldered Cable Hook Bolt	ASTM F568 Class 4.6 or ASTM A307	FBH01 or FBH04
c1	8	CMB High Tension Anchor Plate Washer, 3" x 2 3/8" x 1/2" [76 x 60 x 12.7]	ASTM A36 Steel	–
c2	4	ø3/4" [19] Cable	AASHTO M30 Type 1 Class A	–
c3	16	7/8" [22] Dia. UNC Heavy Hex Nut	ASTM A563 Gr. C	RCE03
c4	16	7/8" [22] Dia. UNC, 11" [279] Long Threaded Rod	ASTM A449/ASTM A193 Gr. B7 Galv. or Stainless/SAE Gr. 5	RCE03
c5	16	Bennet Cable End Fitter	ASTM A47	RCE03
c6	16	7/8" [22] Dia. UNC Square Nut	SAE Gr. 5	FNS20
c7	4	Bennet Short Threaded Turnbuckle	As Supplied	–

Midwest Roadside Safety Facility

High–Tension Cable Terminal

Bill of Materials
0–Degree Impact

SHEET: 15 of 17
DATE: 11/27/2013
DRAWN BY: RJT/CWP/JGP/SDB
REV. BY: CSS/KAL/RKF
DWG. NAME. HTCT–2,3_R5
SCALE: NONE
UNITS: In.[mm]

Figure 16. Bill of Materials, Test No. HTCT-2

Item No.	QTY.	Description	Material Specifications	Hardware Guide
a1	2	Cable Anchor Bracket Base Plate, 19 3/4" x 10 1/4" x 1/2" [502 x 260 x 12.7]	ASTM A36 Steel	–
a2	4	Cable Release Lever Impact Tube, 1 1/2" x 1 1/2" x 1/4" [38 x 38 x 6.4]	ASTM A500 Gr. B	–
a3	2	Cable Release Lever Base Plate, 17 1/2" x 4 7/16" x 5/8" [445 x 113 x 15.9]	ASTM A36 Steel	–
a4	4	Cable Release Lever Support Gusset, 3 11/16" x 2 3/8" x 1/2" [93 x 60 x 12.7]	ASTM A36 Steel	–
a5	4	Cable Release Lever Rotation Bracket, 2" x 2" x 1/2" [51 x 51 x 12.7]	ASTM A36 Steel	–
a6	4	Cable Anchor Bracket Exterior Gusset, 6" x 3 1/4" x 1/2" [152 x 83 x 12.7]	ASTM A36 Steel	–
a7	6	Cable Anchor Bracket Interior Gusset, 3 5/16" x 3 1/4" x 1/2" [84 x 83 x 12.7]	ASTM A36 Steel	–
a8	2	Cable Anchor Bracket Cable Plate, 19 3/4" x 3 5/8" x 5/8" [502 x 92 x 15.9]	ASTM A36 Steel	–
a9	4	Cable Anchor Bracket Rotation Bracket, 5 5/8" x 3 1/2" x 1/2" [142 x 89 x 12.7]	ASTM A36 Steel	–
a10	2	3/4" [19] Dia. UNC, 20" [508] Long Hex Bolt* and Nut	ASTM A307 Gr. A	–
a11	16	3/4" [19] Dia. UNC Heavy Hex Nut	ASTM A563 Gr. A	–
a12	16	3/4" [19] Dia. UNC, 13 3/4" [349] Long Threaded Rod	ASTM A449/ASTM A193 Gr. B7 Galv. or Stainless/SAE Gr. 5	–
a13	20	3/4" [19] Dia. Plain Round Washer	ASTM F844/ SAE Gr. 2	FWC20a

* A 22" [559] long threaded rod may be substituted for the part no. a10 if necessary. Use of threaded will require two extra hex nuts and flat washers.

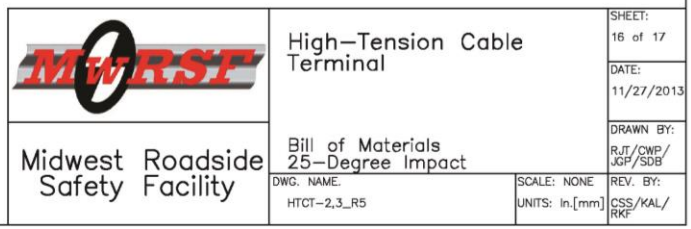

Figure 17. Bill of Materials, Test No. HTCT-3

Item No.	QTY.	Description	Material Specifications	Hardware Guide
b1	2	Cable Hanger	ASTM A36 Steel	–
b2	1	S3x5.7 [S76x8.5] Post, 49" [1245] Long (Cable Hangar and 3/8" [10] Weakening Holes)	ASTM A572 GR50–07, ASTM A709 GR50–09A, ASTM A992–06A	–
b6	1	S3x5.7 [S76x8.5] Post, 49" [1245] Long (Cable Hangar and 5/8" [16] Weakening Holes)	ASTM A572 GR50–07, ASTM A709 GR50–09A, ASTM A992–06A	–
c1	8	CMB High Tension Anchor Plate Washer, 3" x 2 3/8" x 1/2" [76 x 60 x 12.7]	ASTM A36 Steel	–
c2	4	ø3/4" [19] Cable	AASHTO M30 Type 1 Class A	–
c3	16	7/8" [22] Dia. UNC Heavy Hex Nut	ASTM A563 Gr. C	RCE03
c4	16	7/8" [22] Dia. UNC, 11" [279] Long Threaded Rod	ASTM A449/ASTM A193 Gr. B7 Galv. or Stainless/SAE Gr. 5	RCE03
c5	16	Bennet Cable End Fitter	ASTM A47	RCE03
c6	16	7/8" [22] Dia. UNC Square Nut	SAE Gr. 5	FNS20
c7	4	Bennet Short Threaded Turnbuckle	As Supplied	–

Midwest Roadside Safety Facility

High–Tension Cable Terminal

Bill of Materials
25–Degree Impact

SHEET: 17 of 17
DATE: 11/27/2013
DRAWN BY: RJT/CWP/JGP/SDB
REV. BY: CSS/KAL/RKF
DWG. NAME. HTCT–2,3_R5
SCALE: NONE
UNITS: In.[mm]

Figure 18. Bill of Materials, Test No. HTCT-3

Figure 19. System Photographs, Test No. HTCT-2

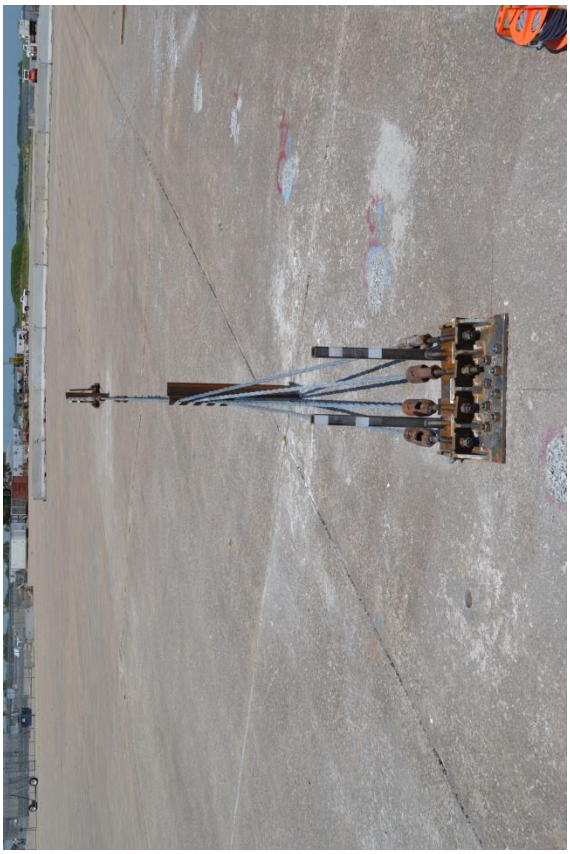

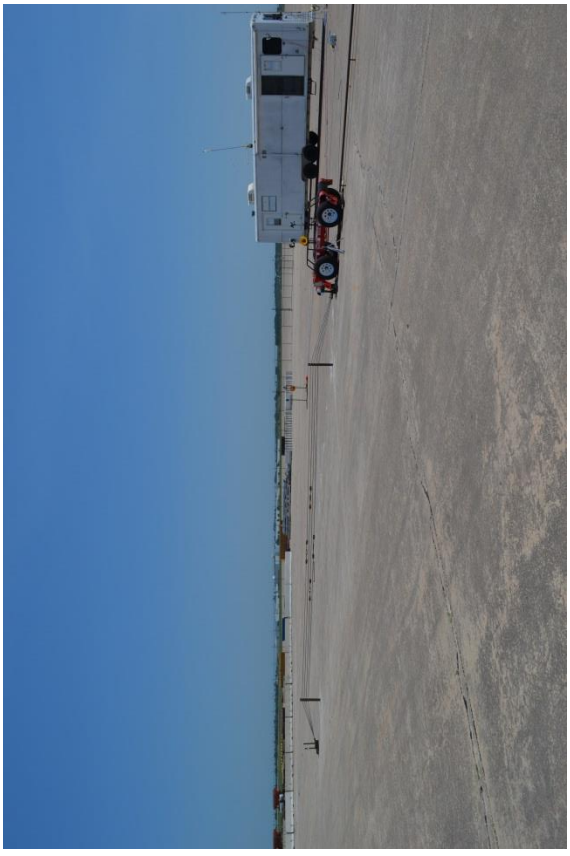

Figure 20. System Photographs, Test No. HTCT-3

3 COMPONENT TEST CONDITIONS

3.1 Scope

Two dynamic tests were conducted on the redesigned high-tension cable end terminal at the MwRSF Proving Grounds in Lincoln, Nebraska. In test no. HTCT-2, the target impact conditions were a speed of 45 mph (72 km/h) and an angle of 0 degrees, which is end-on to the terminal. In test no. HTCT-3, the target impact conditions were a speed of 45 mph (72 km/h) and an angle of 25 degrees. Since the activation of the cables should behave similarly at 45 mph (72 km/h) and 60 mph (100 km/h), the lower impact speed was selected for component testing. The impact height was 19 in. (483 mm) above the groundline. The test matrix is shown in Figures 2 and 3 for test nos. HTCT-2 and HTCT-3, respectively.

3.2 Equipment and Instrumentation

Equipment and instrumentation utilized to collect and record data during the dynamic bogie tests included a bogie, accelerometers, pressure tape switches, high-speed and standard-speed digital video, and still cameras.

3.2.1 Bogie

A rigid frame bogie was used to impact the cable end terminal. A variable height, detachable impact head was used in the testing. The bogie head was constructed of 8-in. (203-mm) diameter, ½-in. (13-mm) thick standard steel pipe, with ¾-in. (19-mm) neoprene belting wrapped around the pipe to prevent local damage to the post from the impact. The impact head was bolted to the bogie vehicle, creating a rigid frame with an impact height of 19 in. (483 mm). The bogie with the impact head is shown in Figure 21. The weight of the bogie with the addition of the mountable impact head and accelerometers was 1,861 lb (844 kg) in test no. HTCT-2 and 1,853 lb (841 kg) in test no. HTCT-3.

Figure 21. Rigid Frame Bogie on Guidance Track

A pickup truck with a reverse cable tow system was used to propel the bogie to the target impact speed. When the bogie approached the end of the guidance system, it was released from the tow cable, allowing it to be free rolling when it impacted the post. A remote braking system was installed on the bogie, allowing it to be brought safely to rest after the test.

3.2.2 Accelerometers

Two accelerometer systems were mounted on the bogie vehicle near its center of gravity to measure the acceleration in the longitudinal, lateral, and vertical directions. However, only the longitudinal acceleration was processed and reported.

The first system, SLICE 6DX, was a modular data acquisition system manufactured by DTS of Seal Beach, California. The acceleration sensors were mounted inside the body of the custom-built SLICE 6DX event data recorder and recorded data at 10,000 Hz to the onboard microprocessor. The SLICE 6DX was configured with 7 GB of non-volatile flash memory, a

range of ±500 g's, a sample rate of 10,000 Hz, and a 1,650 Hz (CFC 1000) anti-aliasing filter. The "SLICEWare" computer software program and a customized Microsoft Excel worksheet were used to analyze and plot the accelerometer data.

The second system, Model EDR-3, was a triaxial piezoresistive accelerometer system manufactured by IST of Okemos, Michigan. The EDR-3 was configured with 256 kB of RAM, a range of ±200 g's, a sample rate of 3,200 Hz, and a 1,120 Hz low-pass filter. The "DynaMax 1 (DM-1)" computer software program and a customized Microsoft Excel worksheet were used to analyze and plot the accelerometer data.

3.2.3 Optical Speed Trap

The retro-reflective optical speed trap was used to determine the speed of the bogie vehicle before impact in test nos. HTCT-2 and HTCT-3. Five retro-reflective targets, spaced at approximately 4-in. (102-mm) intervals, were applied to the side of the bogie vehicle in test no. HTCT-2 which break the beam of light. Three retro-reflective targets, spaced at approximately 18-in. (457-mm) intervals, were applied to the side of the bogie vehicle in test no. HTCT-3. When the emitted beam of light was returned to the emitter/receiver, a signal was sent to the optical control box, which in turn sent an impulse to the data computer as well as activated the External LED box. The computer recorded the impulses and the time at which each occurred. The speed was then calculated using the spacing between the retro-reflective targets and the time between the impulses. LED lights and high-speed digital video analysis are only used as a backup in the event that vehicle speeds cannot be determined from the electronic data.

3.2.4 Digital Photography

Three AOS X-PRI high-speed digital video cameras and three JVC digital video cameras were used to document test no. HTCT-2. Two AOS X-PRI high-speed digital video cameras and three JVC digital video cameras were used to document test no. HTCT-3. The cameras used and

their respective locations are shown in Table 1. The AOS high-speed camera had a frame rate of 500 frames per second and the JVC digital video camera had a frame rate of 29.97 frames per second. Both cameras were placed laterally from the post, with a view perpendicular to the bogie's direction of travel. A Nikon D50 digital still camera was also used to document pre- and post-test conditions for all tests.

Table 1. Video Cameras and Locations in Dynamic Component Tests

Test No.	Digital Video Cameras	
	Description	**Location**
HTCT-2	AOS X-PRI	Lateral – Left Side of Bogie
	AOS X-PRI	Lateral – Right Side of Bogie
	AOS X-PRI	Lateral –Left Side of Bogie
	JVC	Lateral – Left Side of Bogie
	JVC	Lateral – Right Side of Bogie
	JVC	Lateral –Left Side of Bogie
HTCT-3	AOS X-PRI	Oblique – Right Side of Bogie
	AOS X-PRI	Lateral – Right Side of Bogie
	JVC	Lateral – Left Side of Bogie
	JVC	Oblique – Right Side of Bogie
	JVC	Lateral – Right Side of Bogie

3.3 Data Processing

The electronic accelerometer data obtained in dynamic testing was filtered using the SAE Class 60 Butterworth filter conforming to the SAE J211/1 specifications [9]. The pertinent acceleration signal was extracted from the bulk of the data signals. The processed acceleration data was then multiplied by the mass of the bogie to get the impact force using Newton's Second Law. Next, the acceleration trace was integrated to find the change in velocity versus time. Initial velocity of the bogie, calculated from the pressure tape switch data, was then used to determine the bogie velocity, and the calculated velocity trace was integrated to find the bogie's displacement.

The accelerometer data for each test was processed in order to obtain acceleration, velocity, and deflection curves. The values described herein were calculated from the SLICE data curves. Test results for all transducers are provided in Appendix B.

4 COMPONENT TESTING RESULTS AND DISCUSSION

4.1 Results

4.1.1 Test No. HTCT-2

The 1,861-lb (844-kg) bogie impacted the high-tension cable terminal system at a speed of 52.8 mph (85.0 km/h) and at an angle of 0 degrees. The impact location is shown in Figure 22. The cables were tensioned to approximately 4,300 lb (19 kN). The cables were numbered from 1 to 4 as shown in Figure 23. Cable no. 1 corresponded to the bottom cable, and cable no. 4 corresponded to the top cable. A sequential description of the impact events is contained in Table 2. The times are approximate as the bogie wheel obstructed the view of the cable releases. Sequential photographs are shown in Figures 24 through 26.

Figure 22. Impact Location, Test No. HTCT-2

Figure 23. Cable Numbers at Upstream Cable Anchor Bracket, Test No. HTCT-2

Table 2. Sequential Description of Impact Events, Test No. HTCT-2

TIME (sec)	EVENT
0.000	The bogie impacted the cable release lever.
0.014-0.018	Cable nos. 1, 3, and 4 released.
0.038	The impact tubes had rotated and impacted the ground.
0.094	The bogie impacted post no. 2.
0.104	The front tires became airborne.
0.180	The bogie impact post no. 3.
0.256	The left-rear tire became airborne.
0.266	The bogie impacted the top of post no. 4.
0.342	The right-rear tire became airborne.
0.352	The bogie impacted the top of post no. 5.
0.422	The right-rear tire contacted the ground.
0.440	The bogie impacted the top of post no. 6.
0.530	The bogie impacted the top of post no. 7.

0.576	The left-rear tire contacted the ground.
0.624	The bogie impacted post no. 8.
0.676	The front tires contacted the ground.
0.724	The bogie impacted post no. 9.
0.784	Cable no. 2 released.
0.860	The bogie impacted the downstream cable release terminal.

Damage to the end terminal system was moderate, as shown in Figures 27 through 30. The cable release lever was retained in the upstream cable anchor bracket. The kick plate had some minor permanent deformation. Post nos. 2 through 9 were all bent downstream. Posts with holes in the flanges at groundline all buckled at the holes, and the flanges tore from the upstream edge to the location of the weakening holes.

Cable nos. 1, 3, and 4 released from the upstream cable anchor bracket early on the event, However cable no. 2 did not release until the cable lost tension and the stress wave propagation caused the cable to lift out, which occurred very late in the event. Cable no. 2 not releasing and post no. 2 bending downstream may have contributed to the bogie becoming airborne during most of the event.

The cable release lever released from the downstream cable anchor bracket. Cable nos. 1, 3, and 4 released from the downstream cable anchor bracket. Gouging was found in the steel plate around the second cable notch on the downstream cable anchor bracket. The kick plate had some minor permanent deformation. The bogie also sustained minor damaged to the tires and tow pin.

The force vs. time is shown in Figure 31 and the peak forces from each post impact are shown in Table 3. A peak force of 11.5 k (51.2 kN) occurred during the initial impact with the cable release lever. Three combinations of post type and weakening hole size were explored, but it was difficult to draw any conclusions about which combination performed the best. The peak

forces from the accelerometer data varied significantly, even for the same post type, because the bogie was airborne during much of the event, which changed the impact type and direction on each post.

0.000 sec

0.490 sec

0.024 sec

0.644 sec

0.118 sec

0.854 sec

0.324 sec

1.080 sec

Figure 24. Sequential Photographs, Test No. HTCT-2

0.000 sec

0.062 sec

0.008 sec

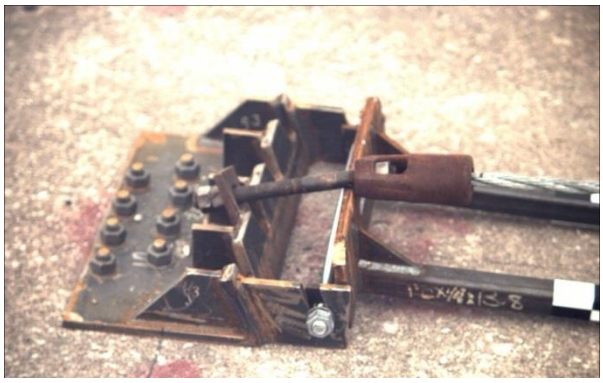
0.738 sec

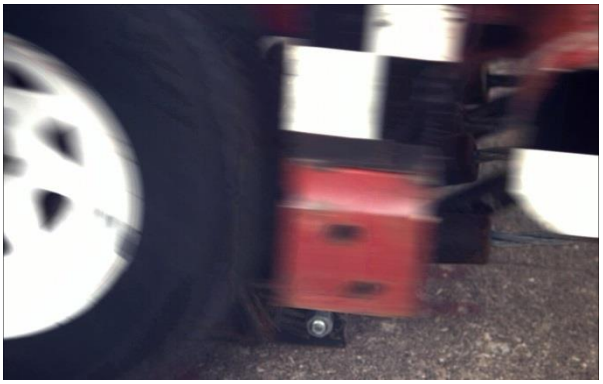
0.020 sec

0.810 sec

0.052 sec

1.036 sec

Figure 25. Sequential Photographs, Test No. HTCT-2

0.000 sec

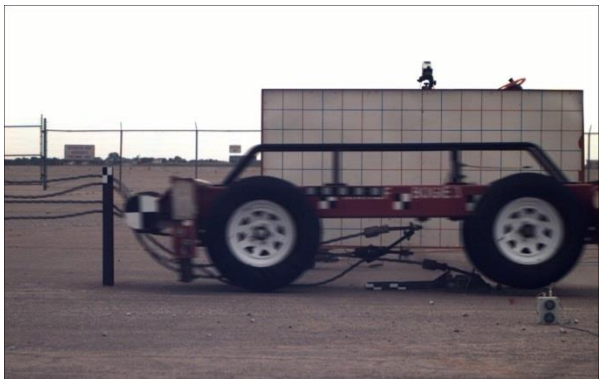
0.090 sec

0.018 sec

0.134 sec

0.040 sec

0.170 sec

0.058 sec

0.796 sec

Figure 26. Sequential Photographs, Test No. HTCT-2

Figure 27. System Damage – Upstream Cable Anchor Bracket, Test No. HTCT-2

Figure 28. System Damage – Post Nos. 2 through 5, Test No. HTCT-2

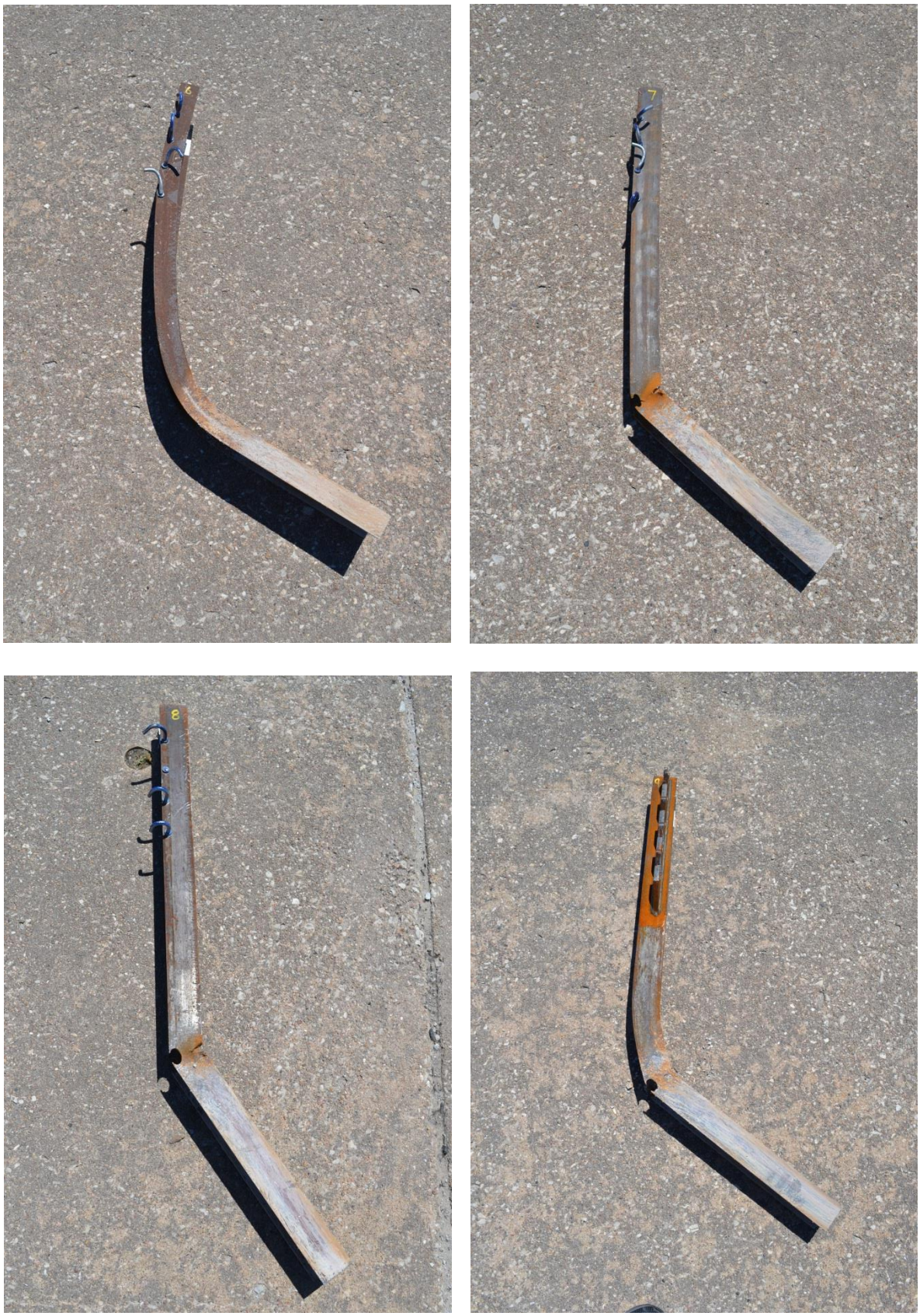

Figure 29. System Damage – Post nos. 6 through 9, Test No. HTCT-2

Figure 30. System Damage – Downstream Cable Anchor Bracket, Test No. HTCT-2

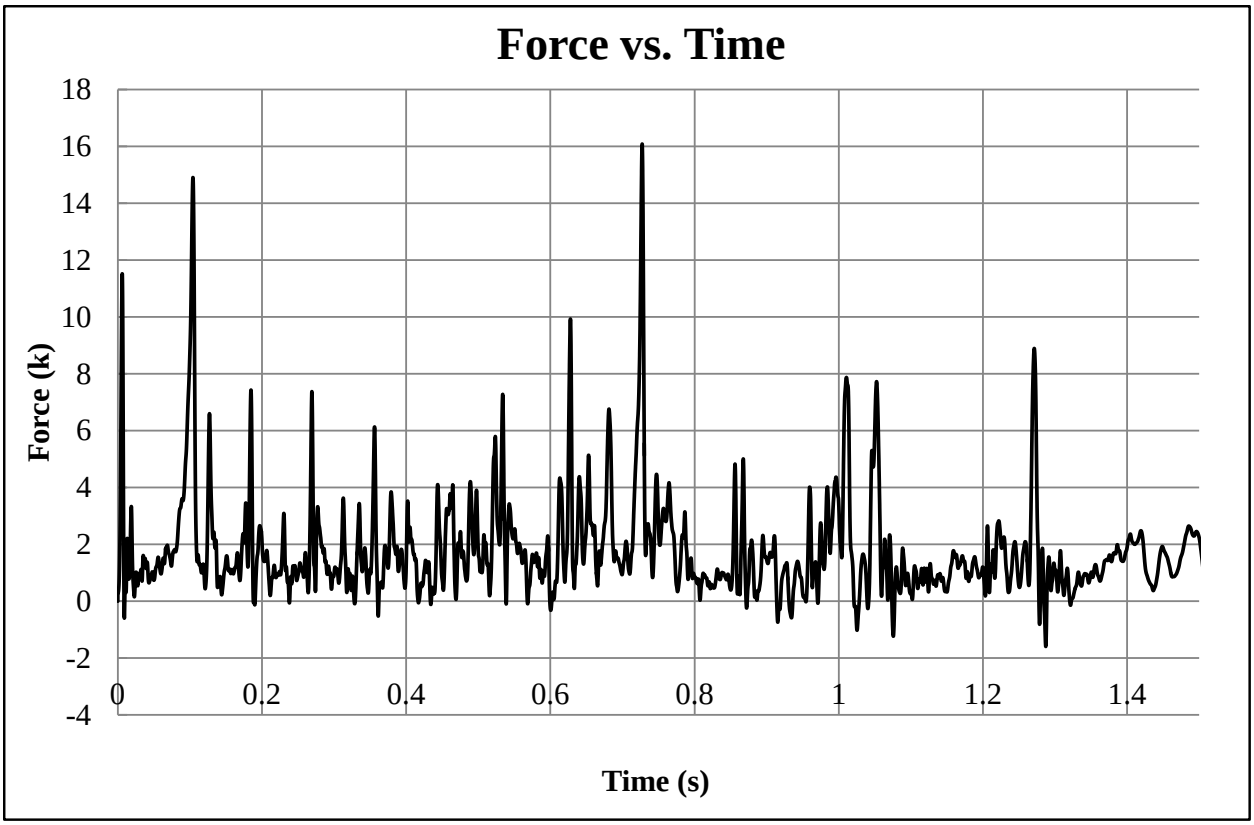

Figure 31. Force vs. Time, Test No. HTCT-2

Table 3. Peak Forces During Post Impacts, Test No. HTCT-2

Post Type	Post Number	Peak Force
M6x4.4 (M152x6.5)	3	7.4 k (33.0 kN)
	6	4.1 k (18.3 kN)
S3x5.7 with ⅜" diameter weakening holes	2	14.9 k (66.3 kN)
	4	7.4 k (32.8 kN)
	7	7.3 k(32.4 kN)
S3x5.7 with ⅝" diameter weakening holes	5	6.1 k (27.3 kN)
	8	9.9 k (44.2 kN)
	9	16.1 k (71.5 kN)

4.1.2 Test No. HTCT-3

The 1,853-lb (841-kg) bogie impacted the high-tension cable terminal at a speed of 51.1 mph (82.2 km/h) and at an angle of 25 degrees. The impact location is shown in Figure 32. The cables were tensioned to approximately 4,300 lb (19 kN). The cables were numbered from 1 to 4 as shown in Figure 33. Opposite of the previous test, cable no. 1 corresponded to the top cable, and cable no. 4 corresponded to the bottom cable. A sequential description of the impact events is contained in Table 4. The times are approximate as the bogie wheel obstructed the view of the cable releases. Sequential photographs are shown in Figures 34 and 35. Documentary photographs are shown in Figures 36 and 37.

Figure 32. Impact Location, Test No. HTCT-3

Figure 33. Cable Numbers at Upstream End Terminal, Test No. HTCT-3

Table 4. Sequential Description of Impact Events, Test No. HTCT-3

TIME (sec)	EVENT
0.000	The bogie impacted the cable release lever.
0.026	Cable no. 4 released.
0.048	Cable no. 3 released.
0.056	Cable nos. 1 and 2 released.
0.069	Left side tires became airborne.
0.121	Bogie tow pin impacted post no. 2.
0.172	Cable no. 4 released at the downstream end terminal.
0.828	The bogie had rolled 90 degrees.

Damage to the cable end terminal system was moderate, as shown in Figures 38 and 39. The cable release lever was retained in the upstream cable anchor bracket. The kick plate had

significant permanent deformation, which may have contributed to a slow cable release time. The vertical tube that was initially impacted was bent slightly. Post no. 2 was bent downstream.

No damage occurred to the downstream cable anchor bracket or cable release lever. Cable no. 1 released from the downstream cable anchor bracket as the cables wrapped around the bogie tow pin, and the stress wave propagation lifted the cable.

The left-front tire of the bogie became airborne as it drove over the lower cables, which had not yet released by that time. After the cables released, they wrapped around the tow pin, the tow pin impacted post no. 2, and the roll motion of the bogie was accentuated. Minor damage occurred to the bogie when the vehicle rolled and subsequently impacted a temporary concrete barrier, as shown in Figure 40.

The force vs. time is shown in Figure 41. A peak force of 4.8 k (21.3 kN) occurred when the bogie impacted the cable release lever. A peak force of 6.3 k (28.2 kN) occurred at 0.044 seconds, or between 0.026 seconds and 0.056 seconds when the cables were releasing.

0.000 sec

0.074 sec

0.010 sec

0.126 sec

0.020 sec

0.0174 sec

0.046 sec

0.254 sec

Figure 34. Sequential Photographs, Test No. HTCT-3

0.000 sec

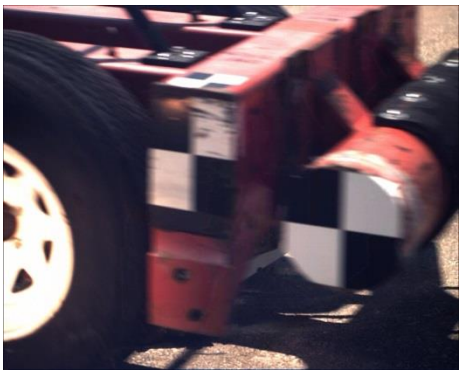
0.036 sec

0.008 sec

0.052 sec

0.014 sec

0.094 sec

0.024 sec

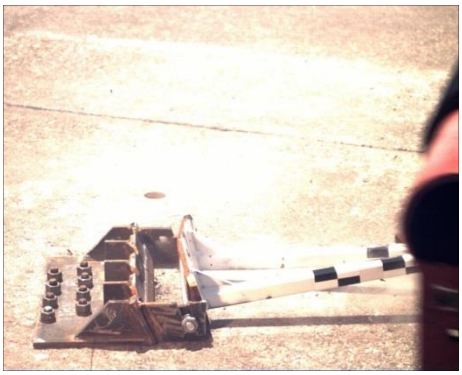
0.172 sec

Figure 35. Sequential Photographs, Test No. HTCT-3

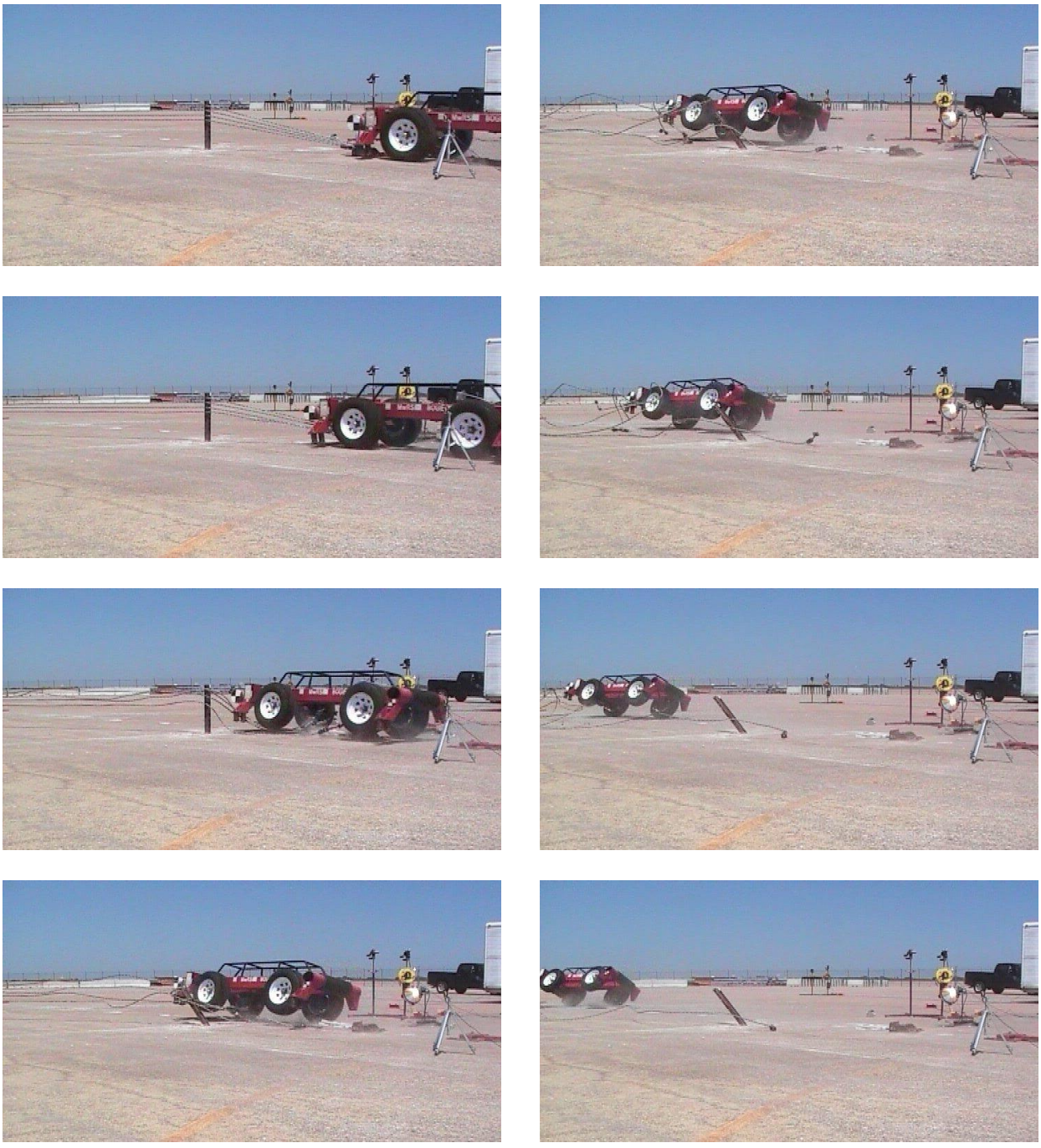

Figure 36. Documentary Photographs, Test No. HTCT-3

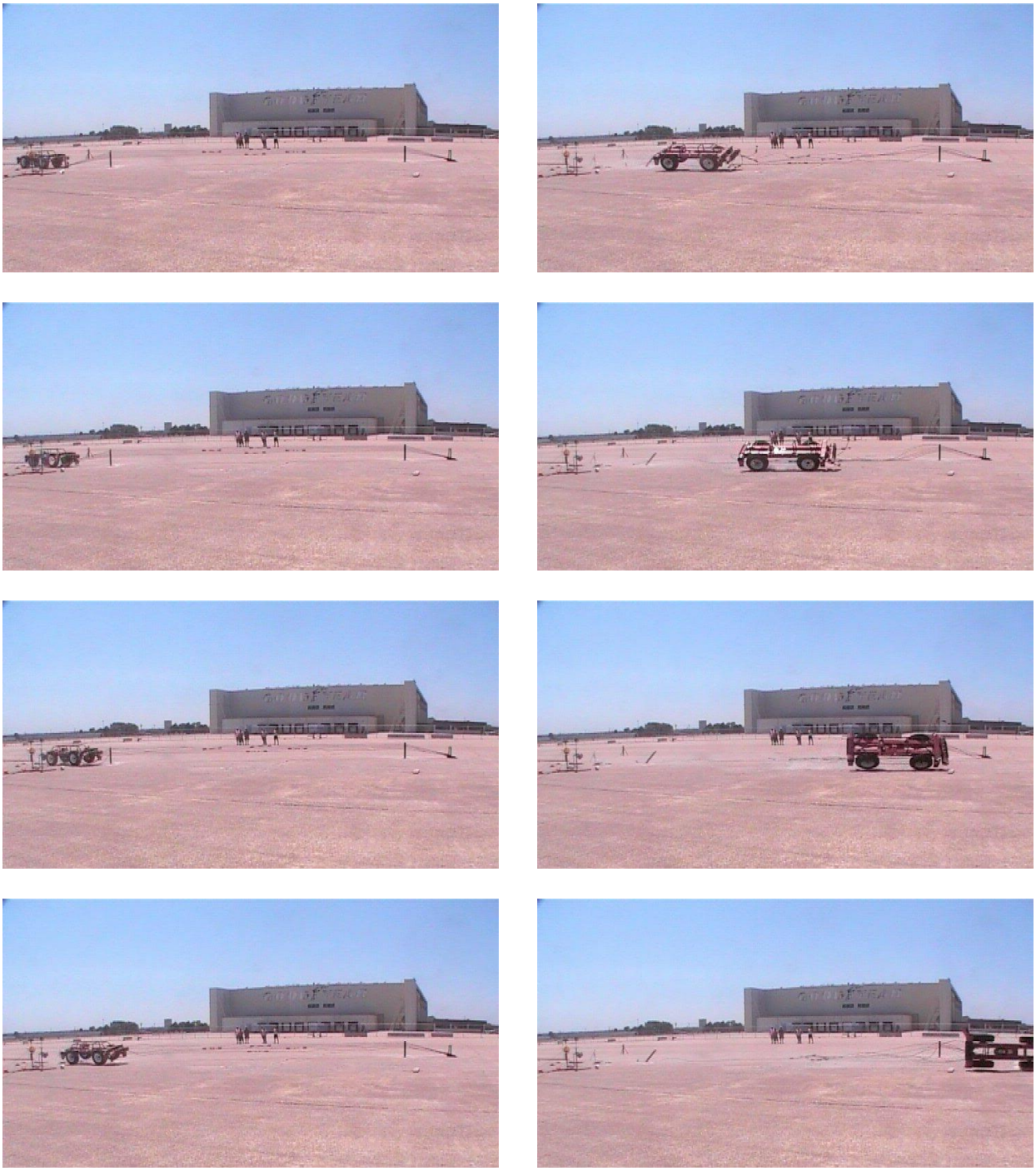

Figure 37. Documentary Photographs, Test No. HTCT-3

Figure 38. System Damage – Overall and Upstream Cable Anchor Bracket, Test No. HTCT-3

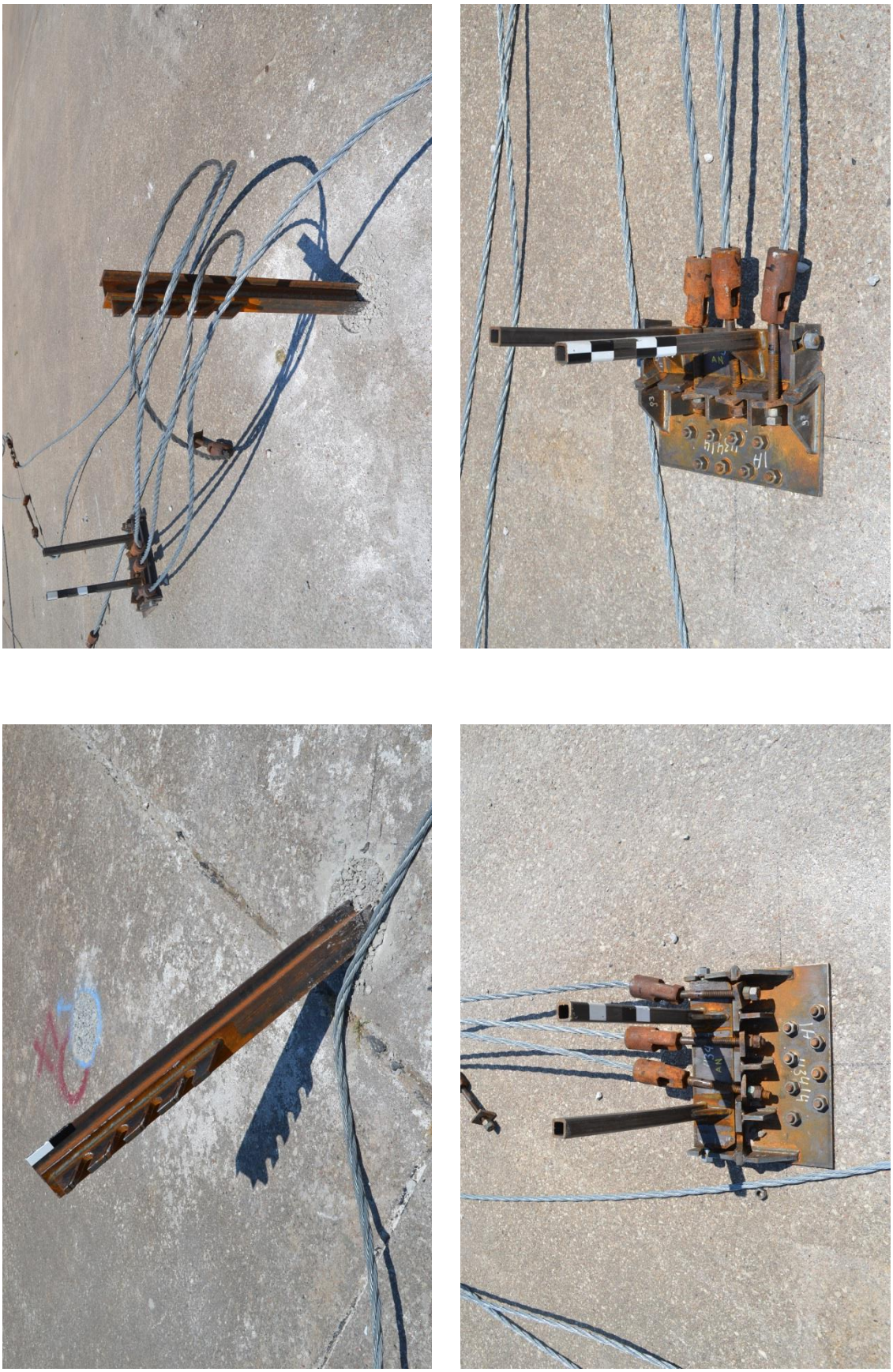

Figure 39. System Damage – Posts and Downstream Cable Anchor Bracket, Test No. HTCT-3

Figure 40. Bogie Damage, Test No. HTCT-3

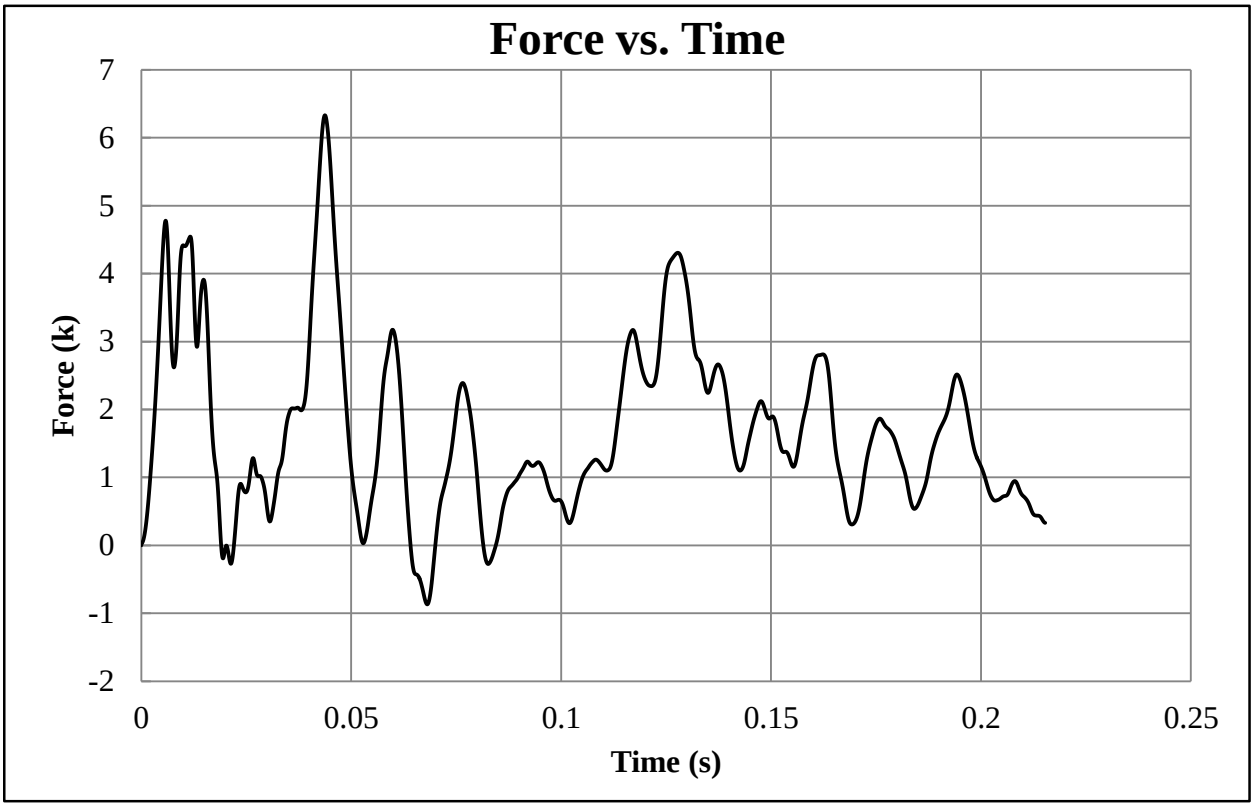

Figure 41. Force vs. Time, Test No. HTCT-3

4.2 Discussion

In test no. HTCT-2, cable nos. 1, 3, and 4 released quickly from the end terminal as desired. However, the second cable did not release until 0.766 seconds after the first three cables, and cable no. 2 only lifted out due to the stress wave that propagated through the cable after tension was released. Some slight permanent bending was found in the kick plate, which may have contributed to cable no. 2 not releasing as quickly as the other cables. The washer snagging on the cable plate notch may have also contributed to the delayed release.

The cable release lever rotated to the ground and was retained with the rotational bolt. It did not show any potential to penetrate a vehicle floorpan or cause undesirable rotations of the vehicle when impacted end-on. When the bogie impacted post nos. 2 through 9, the bogie vehicle pitched up some, but these rotations did not adversely affect the system performance. There were no clear effects of varying the post shape or adding weakening holes. When the bogie vehicle impacted the downstream end terminal in the reverse direction, the cable release lever disengaged as desired and did not affect the trajectory of the vehicle.

In test no. HTCT-3, all cables were nearly released from their respective slots by 26 ms. However, the washers snagged on the cable plate notches at this time, which delayed the release for cable nos. 1 through 3. The kick plate and vertical tubes had permanent deformation, which may have contributed to the delayed release of the cables. The delayed release allowed the left side of the bogie to ride up the bottom cables, which contributed to the bogie becoming airborne. The cables wrapping around the tow pin and the tow pin impacting post no. 2 induced additional roll motion in the bogie, which contributed to the bogie subsequently rolling on its side.

The cable release lever was retained with the rotational bolt and did not show the potential to penetrate a vehicle floorpan. Post no. 2 was bent downstream, and there were no clear effects of adding the weakening holes in the post.

5 SUMMARY, CONCLUSIONS, AND RECOMMENDATIONS

Two bogie tests were conducted on the redesigned high-tension cable end terminal. In test no. HTCT-2, the target impact conditions were a speed of 45 mph (72 km/h) and an angle of 0 degrees, which is end-on to the terminal. In test no. HTCT-3, the target impact conditions were a speed of 45 mph (72 km/h) and an angle of 25 degrees.

The cable release lever rotated to the ground and was retained with the rotational bolt in both the 0-degree and 25-degree impacts. Therefore, the cable release lever did not show the potential to penetrate a vehicle floorpan or cause undesirable rotations of the vehicle that was seen in prior testing [1].

The cables released between 0.014 seconds to 0.018 seconds after impact in the end-on impact. However, the second cable did not release from the cable anchor bracket as desired. The cables released between 0.026 seconds to 0.056 seconds after impact in the 25-degree impact. These release times were later than desired, and were believed to be due in part to the washers snagging on the cable plate notches. The delayed release contributed to the bogie becoming airborne and subsequently rolling over.

Minimal permanent deformation was found in the kick plate in test no. HTCT-2, which may have contributed to the second cable not releasing from the terminal as desired. More significant permanent deformation was found in the kick plate and vertical tubes in test no. HTCT-3. However, no permanent deformation was found in the fixed portion of the cable anchor bracket.

Due to the delayed release time, the terminal needs to be redesigned and evaluated according to MASH to promote a quick release of all cables and to minimize vehicle instabilities. The overall height of the cable anchor bracket was less than 4 in. (102 mm). However, when the

cable release lever rotated and was retained by the rotational bracket, the stub height of the kick plate was greater than 4 in. (102 mm), which was not desired.

6 REFERENCES

1. Hitz, R.A., Molacek, K.J., Stolle, C.S., Polivka, K.A., Faller, R.K., Rohde, J.R., Sicking, D.L., and Reid, J.D., *Design and Evaluation of a Low-Tension Cable Guardrail End Terminal System*, Final Report submitted to the Midwest States Regional Pooled Fund Program, MwRSF Research Report No. TRP-03-131-08, Midwest Roadside Safety Facility, University of Nebraska-Lincoln, Lincoln, Nebraska, July 15, 2008.

2. Ross, H.E., Sicking, D.L., Zimmer, R.A., and Michie, J.D., *Recommended Procedures for the Safety Performance Evaluation of Highway Features*, National Cooperative Highway Research Program (NCHRP) Report 350, Transportation Research Board, Washington, D.C., 1993.

3. Wiebelhaus, M.J., Johnson, E.A., Sicking, D.L., Faller, R.K., Lechtenberg, K.A., Rohde, J.R., Bielenberg, R.W., Reid, J.D., and Rosenbaugh, S.K., *Phase I Development of a Non-Proprietary, Four-Cable, High Tension Median Barrier*, Final Report submitted to the Midwest States Regional Pooled Fund Program, MwRSF Research Report No. TRP-03-213-11, Midwest Roadside Safety Facility, University of Nebraska-Lincoln, Lincoln, Nebraska, December 28, 2011.

4. Schmidt, J.D., Sicking, D.L., Faller, R.K., Lechtenberg, K.A., Bielenberg, R.W., Reid, J.D., and Rosenbaugh, S.K., *Phase II Development of a Non-Proprietary, Four-Cable, High Tension Median Barrier*, Final Report submitted to the Midwest States Regional Pooled Fund Program, MwRSF Research Report No. TRP-03-253-12, Midwest Roadside Safety Facility, University of Nebraska-Lincoln, Lincoln, Nebraska, March 21, 2012.

5. Kampschneider, L.R., Homan, D.M., Lechtenberg, K.A., Faller, R.K., Bielenberg, R.W., Sicking, D.L., Reid, J.D., and Rosenbaugh, S.K., *Evaluation of a Non-Proprietary, High-Tension, Four-cable Median Barrier on Level Terrain*, Final Report submitted to the Midwest States Regional Pooled Fund Program, MwRSF Research Report No. TRP-03-253-12, Midwest Roadside Safety Facility, University of Nebraska-Lincoln, Lincoln, Nebraska, March 21, 2012.

6. *Manual for Assessing Safety Hardware (MASH)*, American Association of State Highway and Transportation Officials (AASHTO), Washington, D.C., 2009.

7. Terpsma, R.J., Reid, J.D., Faller, R.K., and Sicking, D.L., *Development and Recommendations for a Non-Proprietary, High-Tension, Cable End Terminal System*, Final Report submitted to the Midwest States Regional Pooled Fund Program, MwRSF Research Report No. TRP-03-268-12, Midwest Roadside Safety Facility, University of Nebraska-Lincoln, Lincoln, Nebraska, July 17, 2012.

8. *Standard Specifications for Structural Supports for Highway Signs, Luminaires, and Traffic Signals*, American Association of State Highway and Transportation Officials, Washington D.C., 2009.

9. Society of Automotive Engineers (SAE), *Instrumentation for Impact Test – Part 1 – Electronic Instrumentation*, SAE J211/1 MAR95, New York City, NY, July, 2007.

7 APPENDICES

Appendix A. Material Specifications

Item No.	QTY.	Description	Material Specifications	Hardware Guide	Reference
a1	2	Cable Anchor Bracket Base Plate, 19 3/4" x 10 1/4" x **1/2"** [502 x 260 x 12.7]	**ASTM A36 Steel**	-	H# 051257 Req# 12-0438
a2	4	Cable Release Lever Impact Tube, 1 1/2" x 1 1/2" x **1/4"** [38 x 38 x 6.4]	**ASTM A500 Grade B**	-	H# 804674 Req# 12-0438
a3	2	Cable Release Lever Base Plate, 17 1/2" x 4 7/16" x **5/8"** [445 x 113 x 15.9]	**ASTM A36 Steel**	-	H# AN0650-04 Req# 12-0438
a4	4	Cable Release Lever Support Gusset, 3 11/16" x 2 3/8" x **1/2"** [93 x 60 x 12.7]	**ASTM A36 Steel**	-	H# 051257 Req# 12-0438
a5	4	Cable Release Lever Rotation Bracket, 2" x 2" x **1/2"** [51 x 51 x 12.7]	**ASTM A36 Steel**	-	H# V913789 Req# 12-0438
a6	4	Cable Anchor Bracket Exterior Gusset, 6" x 3 1/4" x **1/2"** [152 x 83 x 12.7]	**ASTM A36 Steel**	-	H# 051257 Req# 12-0438
a7	6	Cable Anchor Bracket Interior Gusset, 3 5/16" x 3 1/4" x **1/2"** [84 x 83 x 12.7]	**ASTM A36 Steel**	-	H# 051257 Req# 12-0438
a8	2	Cable Anchor Bracket Cable Plate, 19 3/4" x 3 5/8" x **5/8"** [502 x 92 x 15.9]	**ASTM A36 Steel**	-	H# AN0650-04 Req# 12-0438
a9	4	Cable Anchor Bracket Rotation Bracket, 5 5/8" x 3 1/2" x **1/2"** [142 x 89 x 12.7]	**ASTM A36 Steel**	-	H# 051257 Req# 12-0438
a10	2	3/4"-UNC 10 x 20" [M19x508] Long Hex Bolt and Nut	**ASTM A307**	-	Nut: 3/4"-10 A563GR.DGHvyHexNut Lot#170277 / Bolt: 3/4" UNC-10 Threaded Rod ASTM A449 Gr. 2
a11	16	3/4" [19] Hex Nut	**ASTM A563M**	-	Lot#133507 12-0364
a12	16	3/4"-UNC 10 x 13 3/4" [19x349] Long Threaded Rod	**ASTM A449**	-	Lot# 032677 Heat# 9476653 Req# 12-0428
a13	20	3/4" [19] Flat Washer	**ASTM F844 SAE Grade 2**	**FWC20a**	PFC Lot#10072310 12-0364
b1	2	Cable Hanger	**ASTM A36 Steel**	-	N/A
b2	1	S3x5.7 [S76x8.5] Post, 49" [1778] Long (Cable Hangar and 3/8" [10] Weakening Holes)	**ASTM A572 GR50-07, ASTM A709 GR50-09A, ASTM A992-06A**	-	Post: blue paint
b3	2	M6x4.4 [M152x6.5] Post, 49" [1778] Long	**ASTM A572 GR50-07, ASTM A709 GR50-09A, ASTM A992-06A**	-	N/A
b4	2	S3x5.7 [S76x8.5] Post, 49" [1778] Long (With 3/8" [10] Weakening Holes)	**ASTM A572 GR50-07, ASTM A709 GR50-09A, ASTM A992-06A**	-	Post: blue paint
b5	2	S3x5.7 [S76x8.5] Post, 49" [1778] Long (With 5/8" [16] Weakening Holes)	**ASTM A572 GR50-07, ASTM A709 GR50-09A, ASTM A992-06A**	-	Post: blue paint
b6	1	S3x5.7 [S76x8.5] Post, 49" [1778] Long (Cable Hangar and 5/8" [16] Weakening Holes)	**ASTM A572 GR50-07, ASTM A709 GR50-09A, ASTM A992-06A**	-	Post: blue paint
b7	24	5/16" [8] Hex Nut	**ASTM A307**	-	Red Paint 12-0368
b8	24	Low-Tension, Cable Hook Bolt	**ASTM F568 Class 4.6 or ASTM A307**	**FBH01**	Red Paint 12-0368
c1	8	CMB High Tension Anchor Plate Washer, 3" x 2 3/8" x 1/2" [76 x 60 x 12.7]	**ASTM A36 Steel**	-	Req# 11-0341
c2	4	3/4" [19] 3x7 Cl A Galvanized High Strength Pre-Stretched Cable Guiderail	**AASHTO M30 Type 1 Class A**	-	"C-2"
c3	16	7/8" [22] Hex Nut	**ASTM A563M**	**RCE03**	4CMB Supply
c4	16	7/8"-UNF 14 x 11" [22x279] Threaded Rod	**ASTM A449**	**RCE03**	4CMB Supply
c5	16	Bennet Cable End Fitter	**ASTM A47**	**RCE03**	4CMB Supply
c6	16	7/8" [22] Square Nut	**SAE Grade 5**	**FNS20**	REGULAR NUT SAME AS c3_4CMB SUPPLY
c7	4	Bennet Short Threaded Turnbuckle	**As Supplied**	-	4CMB Supply
-	-	Powers Fasteners Epoxy	AC100+Gold	-	C222/ APR13 and C293/ MAY12

Figure A-1. Bill of Materials, Test No. HTCT-2

Item No.	QTY.	Description	Material Specifications	Hardware Guide	Reference
a1	2	Cable Anchor Bracket Base Plate, 19 3/4" x 10 1/4" x **1/2"** [502 x 260 x 12.7]	**ASTM A36 Steel**	-	H# 051257 Req# 12-0438
a2	4	Cable Release Lever Impact Tube, 1 1/2" x 1 1/2" x **1/4"** [38 x 38 x 6.4]	**ASTM A500 Grade B**	-	H# 804674 Req# 12-0438
a3	2	Cable Release Lever Base Plate, 17 1/2" x 4 7/16" x **5/8"** [445 x 113 x 15.9]	**ASTM A36 Steel**	-	H# AN0650-04 Req# 12-0438
a4	4	Cable Release Lever Support Gusset, 3 11/16" x 2 3/8" x **1/2"** [93 x 60 x 12.7]	**ASTM A36 Steel**	-	H# 051257 Req# 12-0438
a5	4	Cable Release Lever Rotation Bracket, 2" x 2" x **1/2"** [51 x 51 x 12.7]	**ASTM A36 Steel**	-	H# V913789 Req# 12-0438
a6	4	Cable Anchor Bracket Exterior Gusset, 6" x 3 1/4" x **1/2"** [152 x 83 x 12.7]	**ASTM A36 Steel**	-	H# 051257 Req# 12-0438
a7	6	Cable Anchor Bracket Interior Gusset, 3 5/16" x 3 1/4" x **1/2"** [84 x 83 x 12.7]	**ASTM A36 Steel**	-	H# 051257 Req# 12-0438
a8	2	Cable Anchor Bracket Cable Plate, 19 3/4" x 3 5/8" x **5/8"** [502 x 92 x 15.9]	**ASTM A36 Steel**	-	H# AN0650-04 Req# 12-0438
a9	4	Cable Anchor Bracket Rotation Bracket, 5 5/8" x 3 1/2" x **1/2"** [142 x 89 x 12.7]	**ASTM A36 Steel**	-	H# 051257 Req# 12-0438
a10	2	3/4"-UNC 10 x 20" [M19x508] Long Hex Bolt and Nut	**ASTM A307**	-	Nut: 3/4"-10 A563GR.DGHvyHexNut Lot#170277 / Bolt: 3/4" UNC-10 Threaded Rod ASTM A449 Gr. 2
a11	16	3/4" [19] Hex Nut	**ASTM A563M**	-	Lot#133507 12-0364
a12	16	3/4"-UNC 10 x 13 3/4" [19x349] Long Threaded Rod	**ASTM A449**	-	Lot# 032677 Heat# 9476653 Req# 12-0428
a13	20	3/4" [19] Flat Washer	**ASTM F844 SAE Grade 2**	**FWC20a**	PFC Lot#10072310 12-0364
b1	2	Cable Hanger	**ASTM A36 Steel**	-	N/A
b2	1	S3x5.7 [S76x8.5] Post, 49" [1778] Long (Cable Hangar and 3/8" [10] Weakening Holes)	**ASTM A572 GR50-07, ASTM A709 GR50-09A, ASTM A992-06A**	-	Post: blue paint
b6	1	S3x5.7 [S76x8.5] Post, 49" [1778] Long (Cable Hangar and 5/8" [16] Weakening Holes)	**ASTM A572 GR50-07, ASTM A709 GR50-09A, ASTM A992-06A**	-	Post: blue paint
c1	8	CMB High Tension Anchor Plate Washer, 3" x 2 3/8" x 1/2" [76 x 60 x 12.7]	**ASTM A36 Steel**	-	Req# 11-0341
c2	4	3/4" [19] 3x7 Cl A Galvanized High Strength Pre-Stretched Cable Guiderail	**AASHTO M30 Type 1 Class A**	-	"C-2"
c3	16	7/8" [22] Hex Nut	**ASTM A563M**	**RCE03**	4CMB Supply
c4	16	7/8"-UNF 14 x 11" [22x279] Threaded Rod	**ASTM A449**	**RCE03**	4CMB Supply
c5	16	Bennet Cable End Fitter	**ASTM A47**	**RCE03**	4CMB Supply
c6	16	7/8" [22] Square Nut	**SAE Grade 5**	**FNS20**	REGULAR NUT SAME AS c3_4CMB SUPPLY
c7	4	Bennet Short Threaded Turnbuckle	**As Supplied**	-	4CMB Supply
-	-	Powers Fasteners Epoxy	AC100+Gold	-	C293/ MAY13

Figure A-2. Bill of Materials, Test No. HTCT-3

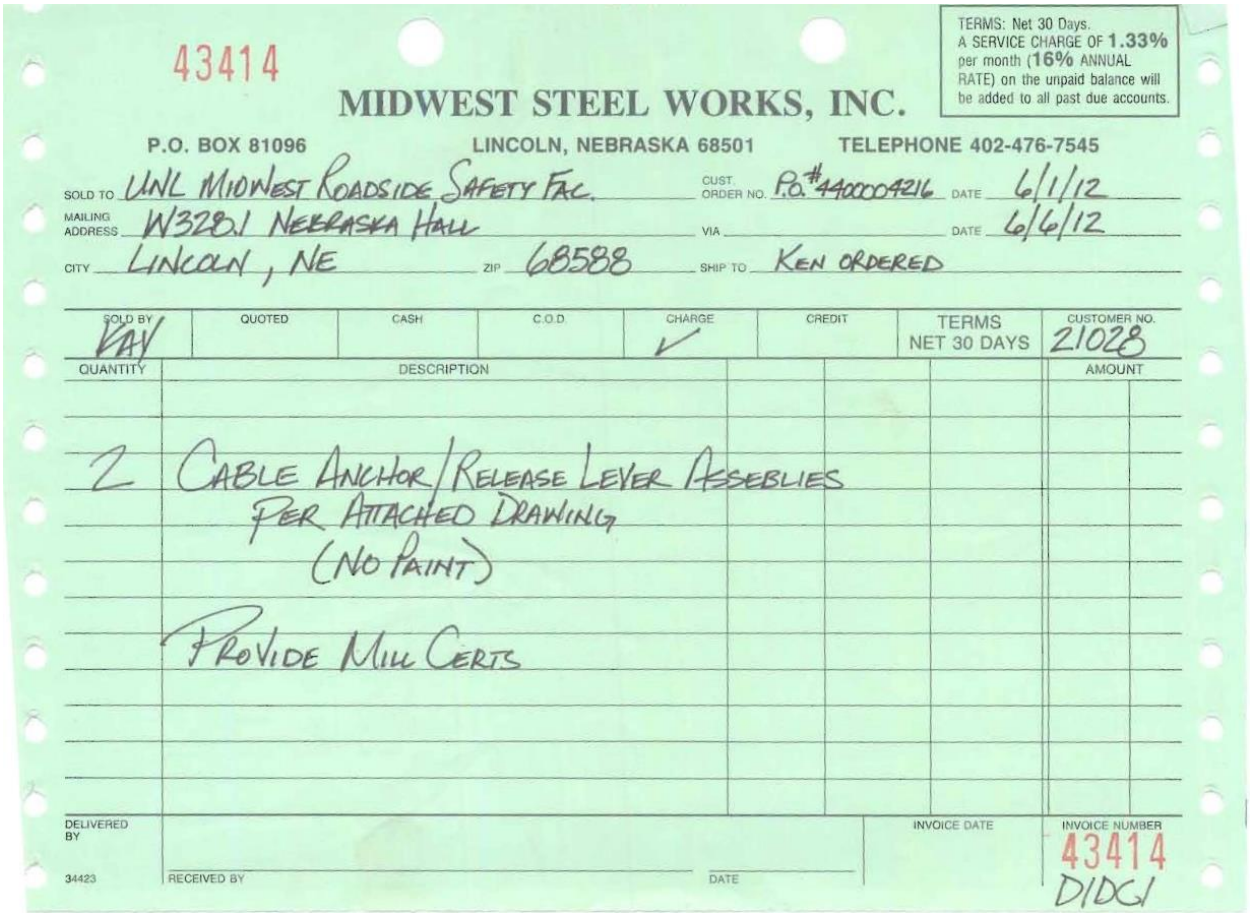

43414

MIDWEST STEEL WORKS, INC.

TERMS: Net 30 Days. A SERVICE CHARGE OF 1.33% per month (16% ANNUAL RATE) on the unpaid balance will be added to all past due accounts.

P.O. BOX 81096 LINCOLN, NEBRASKA 68501 TELEPHONE 402-476-7545

SOLD TO UNL MIDWEST ROADSIDE SAFETY FAC. CUST. ORDER NO. P.O.#4400004216 DATE 6/1/12

MAILING ADDRESS W328.1 NEBRASKA HALL VIA DATE 6/6/12

CITY LINCOLN, NE ZIP 68588 SHIP TO KEN ORDERED

SOLD BY	QUOTED	CASH	C.O.D.	CHARGE	CREDIT	TERMS	CUSTOMER NO.
KAY				✓		NET 30 DAYS	21028

QUANTITY	DESCRIPTION	AMOUNT
2	CABLE ANCHOR/RELEASE LEVER ASSEBLIES PER ATTACHED DRAWING (NO PAINT)	
	PROVIDE MILL CERTS	

DELIVERED BY

34423

RECEIVED BY

DATE

INVOICE DATE

INVOICE NUMBER 43414 DIDG

Figure A-3. Anchor Bracket and Release Lever Assemblies, Test Nos. HTCT-2 and HTCT-3

Atlas Tube Canada ULC
200 Clark St.
Harrow, Ontario, Canada
N0R 1G0
Tel: 519-738-3541
Fax: 519-738-3537

Atlas Tube
JMC STEEL GROUP

Ref.B/L: 80435711
Date: 06.30.2011
Customer: 179

MATERIAL TEST REPORT

Sold to

Steel & Pipe Supply Compan
PO Box 1688
MANHATTAN KS 66505
USA

Shipped to

Steel & Pipe Supply Compan
401 New Century Parkway
NEW CENTURY KS 66031
USA

Material: 1.5x1.5x250x24'0"0(8x8)NMHGRC-D Material No: 0150152502400-DNMH Made in: USA
Melted in: Canada
Sales order: 642469 Purchase Order: 45-160445 Cust Material #: 6511625024Y2

Heat No	C	Mn	P	S	Si	Al	Cu	Cb	Mo	Ni	Cr	V	Ti	B	N
804674	0.190	0.800	0.010	0.006	0.011	0.048	0.047	0.000	0.005	0.018	0.050	0.002	0.002	0.000	0.000

Bundle No	PCs	Yield	Tensile	Eln.2in	Certification	CE:
M300560894	64	077700 Psi	084600 Psi	31.5 %	ASTM A500-10A GRADE C	0.34

Material Note:
Sales Or.Note:

Material: 8.625x250x42'0"0(7x1). Material No: R086252504200 Made in: Canada
Melted in: Canada
Sales order: 646571 Purchase Order: 45-161741 Cust Material #: 6482025042

Heat No	C	Mn	P	S	Si	Al	Cu	Cb	Mo	Ni	Cr	V	Ti	B	N
760532	0.190	0.760	0.012	0.009	0.011	0.039	0.056	0.005	0.004	0.015	0.042	0.002	0.000	0.000	0.000

Bundle No	PCs	Yield	Tensile	Eln.2in	Certification	CE:
M101043254	7	056240 Psi	066730 Psi	30.1 %	ASTM A500-10A GRADE B&C	0.33

Material Note:
Sales Or.Note:

Material: 8.625x322x42'0"0(7x1). Material No: R086253224200 Made in: Canada
Melted in: Canada
Sales order: 646575 Purchase Order: 45-161742 Cust Material #: 648204042

Heat No	C	Mn	P	S	Si	Al	Cu	Cb	Mo	Ni	Cr	V	Ti	B	N
805493	0.180	0.830	0.004	0.005	0.013	0.064	0.035	0.004	0.004	0.013	0.029	0.002	0.000	0.000	0.000

Bundle No	PCs	Yield	Tensile	Eln.2in	Certification	CE:
M200752965	7	064370 Psi	076170 Psi	33.5 %	ASTM A500-10A GRADE B&C	0.33

Material Note:
Sales Or.Note:

Authorized by Quality Assurance:
The results reported on this report represent the actual attributes of the material furnished and indicate full compliance with all applicable specification and contract requirements.
Conforms to AWS D1.1 method.

Steel Tube Institute OF NORTH AMERICA

Page : 3 Of 5

Metals Service Center Institute

Figure A-4. Anchor Bracket and Release Lever Assemblies, Test Nos. HTCT-2 and HTCT-3

NUCOR
NUCOR STEEL TUSCALOOSA, INC.

MILL TEST CERTIFICATE

1700 HOLT RD N.E.
Tuscaloosa, AL 35404-1000
800-827-8872

Page #:1 of 1

Load Number	Tally	MTT Order Number	P.O. Number	Part Number	Certificate Number	Date
382702	00000000402491	N-104874-001	4500153739		L318572-1	03/07/2011 16:36

Grade — **Customer:**

Order Description:
A36, 0.6250 IN x 96.000 IN x 240.000 IN
Quality Plan Description:
A36/SA36/A70936: ASTM A36-08/ASME SA36-03/A709-36-08

Sold TO:
STEEL & PIPE SUPPLY CO., INC. MANHATTAN KS
Ship TO:
KANSAS CITY WAREHOUSE Gardner KS

Shipped Item	Heat/Slab Number	Certified By	C	Mn	P	S	Si	Cu	Ni	Cr	Mo	Cb	V	Al	Ti	N2	B	Ca	Sn	CEV
1B2708D	A1N0650-04 ***	A1N0650	0.07	1.30	0.014	0.004	0.05	0.23	0.08	0.06	0.019	0.015	0.002	0.028	0.001	0.008	0.0002	0.0026	0.009	0.32

Shipped Item	Certified By	Heat Number	Yield ksi	Tensile ksi	Y/T %	ELONGATION % 2"	ELONGATION % 8"	Bend OK?	Hard HB	Charpy Impacts (ft-lbf) Size	mm	1	2	3	Avg	Shear % 1	2	3	Avg	Test Temp
1B2708D	S1B2708FTT	A1N0650 ***	58.1	67.6	85.9	39.7														
1B2708D	S1B2708MTT	A1N0650 ***	55.3	64.8	85.3	31.8														

Items: 1 PCS: 5 Weight: 20419 LBS

Mercury has not come in contact with this product during the manufacturing process not has any mercury been used by the manufacturing process. Certified in accordance with EN 10204 3.1. No weld repair has been performed on this material. Manufactured to a fully killed fine grain practice. ** Produced from Coil **
ISO 9001:2008 Registered, PED Certified

*** indicates Heats melted and Manufactured in the U.S.A.

We hereby certify that the product described above passed all of the tests required by the specifications.

April Pitts - QA Engineer

Figure A-5. Anchor Bracket and Release Lever Assemblies, Test Nos. HTCT-2 and HTCT-3

SPS Coil Processing Tulsa
5275 Bird Creek Ave.
Port of Catoosa, OK 74015

SOLD TO

SHIP TO
13716
Warehouse 0040
401 New Century Parkway
New Century KS 66031

METALLURGICAL TEST REPORT

PAGE 1 of 1
DATE 04/26/2012
TIME 13:29:25
USER WILLIAMR

Order	Material No.	Description	Quantity	Weight	Customer Part	Customer PO	Ship Date
40178813-0020	701672120TM	1/2 72 X 120 A36 TEMPERPASS STPMLPL	5	6,126			04/26/2012

Chemical Analysis

Heat No. 051257 Vendor THYSSENKRUPP STEEL USA-LLC Mill THYSSENKRUPP STEEL USA-LLC
Batch 0001620056 5 EA 6,126 LB

Carbon	Manganese	Phosphorus	Sulphur	Silicon	Nickel	Chromium	Molybdenum	Boron	Copper	Aluminum	Titanium	Vanadium	Columbium	Nitrogen	Tin
0.1910	0.8590	0.0100	0.0045	0.0200	0.0070	0.0170	0.0000	0.0001	0.0060	0.0360	0.0010	0.0020	0.0000	0.0025	0.0000

Mechanical/ Physical Properties

Mill Coil No. 1108731200

Tensile	Yield	Elong	Rckwl	Grain	Charpy	Charpy Dr	Charpy Sz	Temperature	Olsen
66000.000	41000.000	37.58	0	0.000	0	NA		61.50	
65900.000	41200.000	36.50	0	0.000	0	NA			

Chemical Analysis

Heat No. 051257 Vendor THYSSENKRUPP STEEL USA-LLC Mill THYSSENKRUPP STEEL USA-LLC
Batch 0001620057 4 EA 4,900.800 LB

Carbon	Manganese	Phosphorus	Sulphur	Silicon	Nickel	Chromium	Molybdenum	Boron	Copper	Aluminum	Titanium	Vanadium	Columbium	Nitrogen	Tin
0.1910	0.8590	0.0100	0.0045	0.0200	0.0070	0.0170	0.0000	0.0001	0.0060	0.0360	0.0010	0.0020	0.0000	0.0025	0.0000

Mechanical/ Physical Properties

Mill Coil No. 1108731200

Tensile	Yield	Elong	Rckwl	Grain	Charpy	Charpy Dr	Charpy Sz	Temperature	Olsen
66000.000	41000.000	37.58	0	0.000	0	NA		61.50	
65900.000	41200.000	36.50	0	0.000	0	NA			

THE CHEMICAL, PHYSICAL, OR MECHANICAL TESTS REPORTED ABOVE ACCURATELY REFLECT INFORMATION AS CONTAINED IN THE RECORDS OF THE CORPORATION.

Figure A-6. Anchor Bracket and Release Lever Assemblies, Test Nos. HTCT-2 and HTCT-3

GERDAU

*JACKSON STEEL MILL
801 AMERISTEEL ROAD
JACKSON TN 38305 USA
(731) 424-5600

Chemical and Physical Test Report
MADE IN UNITED STATES

V-703980

SHIP TO	INVOICE TO	SHIP DATE
STEEL AND PIPE SUPPY CO INC 401 NEW CENTURY PARKWAY 785-587-5185 NEW CENTURY, KS 66031	STEEL AND PIPE SUPPLY CO. INC. PO BOX 1688 MANHATTAN, KS 66505-1688	10/06/11 CUST. ACCOUNT NO 40130833

PRODUCED IN: JACKSON TN

SHAPE + SIZE	GRADE	SPECIFICATION	SALES ORDER	CUST P.O. NUMBER
F1/2 X 2	A36	ASTM A36-08, A709-10-36,ASME SA-36;CSA G40.21-44W-04,	2639163-19	G450007728

HEAT I.D.	C	Mn	P	S	Si	Cu	Ni	Cr	Mo	V	Nb	B	Sn	Al	Ti	C Eqv					
V913789	.12	.83	.016	.024	.23	.31	.11	.14	.040	.003	<.008	.0004	.010	.001	.00100	.288					

Mechanical Test: Yield 49490 PSI, 341.22 MPA Tensile: 70640 PSI, 487.05 MPA %El: 28.0/8in, 28.0/200MM Red R 27.35
Customer Requirements CASTING: STRAND CAST
Mechanical Test: Yield 49090 PSI, 338.46 MPA Tensile: 70560 PSI, 486.49 MPA %El: 28.0/8in, 28.0/200MM Red R 27.35
Customer Requirements CASTING: STRAND CAST
CUST ITEM NUMBER: 000000000101620020

PRODUCED IN: JACKSON TN

SHAPE + SIZE	GRADE	SPECIFICATION	SALES ORDER	CUST P.O. NUMBER
F3/4 X 2 1/2	A36	ASTM A36-08, A709-10-36,ASME SA-36;CSA G40.21-44W-04,	2639163-20	G450007728

HEAT I.D.	C	Mn	P	S	Si	Cu	Ni	Cr	Mo	V	Nb	B	Sn	Al	Ti	C Eqv					
V913817	.13	.72	.019	.038	.23	.30	.09	.11	.030	.024	.001	.0004	.010	.002	.00100	.274					

Mechanical Test: Yield 51722 PSI, 356.61 MPA Tensile: 70930 PSI, 489.05 MPA %El: 29.0/8in, 29.0/200MM Red R 14.58
Customer Requirements CASTING: STRAND CAST
Mechanical Test: Yield 51888 PSI, 357.76 MPA Tensile: 71180 PSI, 490.77 MPA %El: 29.0/8in, 29.0/200MM Red R 14.58
Customer Requirements CASTING: STRAND CAST
CUST ITEM NUMBER: 000000000102421620

Customer Notes
NO WELD REPAIRMENT PERFORMED. STEEL NOT EXPOSED TO MERCURY.

This material, including the billets, was melted and manufactured in the United States of America

THE ABOVE FIGURES ARE CERTIFIED CHEMICAL AND PHYSICAL TEST RECORDS AS CONTAINED IN THE PERMANENT RECORDS OF COMPANY.

Bhaskar Yalamanchili
Quality Director
Gerdau

Metallurgical Services Manager
JACKSON STEEL MILL

Seller warrants that all material furnished shall comply with specifications subject to standard published manufacturing variations. NO OTHER WARRANTIES, EXPRESSED OR IMPLIED, ARE MADE BY THE SELLER, AND SPECIFICALLY EXCLUDED ARE WARRANTIES OF MERCHANTABILITY AND FITNESS FOR A PARTICULAR PURPOSE.
In no event shall seller be liable for indirect, consequential or punitive damages arising out of or related to the materials furnished by seller.
Any claim for damages for materials that do not conform to specifications must be made from buyer to seller immediately after delivery of same in order to allow the seller the opportunity to inspect the material in question.

Figure A-7. Anchor Bracket and Release Lever Assemblies, Test Nos. HTCT-2 and HTCT-3

Dear KEN KRENK
As you requested, we are providing you with the following information. We certify that, to the best of Grainger's actual knowledge, the products described below conform to the respective manufacturer's specifications as described and approved by the manufacturer.

Item #	Description	Vendor Part #	Catalog Page #
4FGZ8	Threaded Rod,Gr 2,3/4-10 x 6 Ft,RH,UNC	4FGZ8	3060
1AY84	Hex Nut,Heavy,3/4-10,1 1/8 In,PK20	1AY84	2931
1TA40	Structural Bolt,5/8-11,5 L,Pk10	1TA40	2916

If you need any additional information, please contact our Compliance Team at 847-647-4649 or prod_mgmt_support@grainger.com.

Gary Figiel
Engineering Technician
Compliance Team
Grainger Industrial Supply

Dear KEN KRENK
As you requested, we are providing you with the following information. We certify that, to the best of Grainger's actual knowledge, the products described below conform to the respective manufacturer's specifications as described and approved by the manufacturer.

Item #	Description	Vendor Part #	Catalog Page #
1XA48	Hex Nut,Heavy,3/4-10,1 1/4 In,PK25	1XA48	2931
2DA67	Flat Washer,SAE,Steel,Fits 3/4 In,Pk 100	2DA67	0000

If you need any additional information, please contact our Compliance Team at 847-647-4649 or prod_mgmt_support@grainger.com.

Gary Figiel
Engineering Technician
Compliance Team
Grainger Industrial Supply

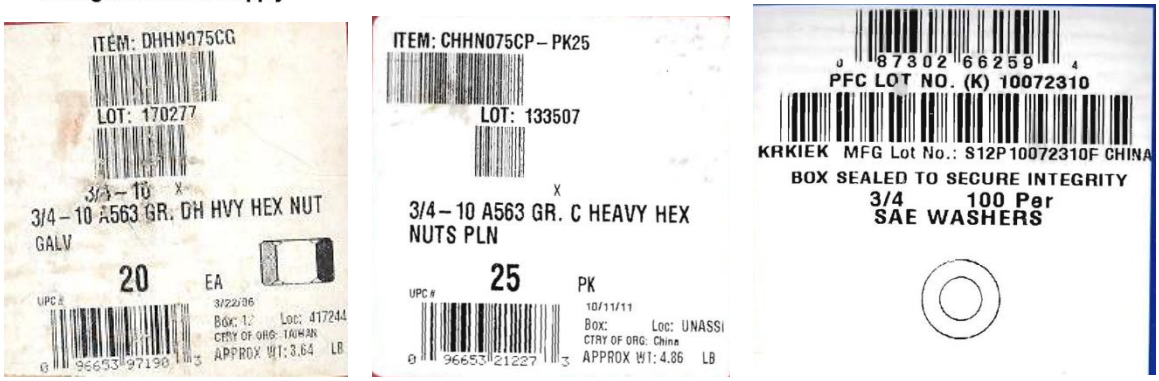

Figure A-8. ¾-in. (19-mm) Diameter Nuts and Washers, Test Nos. HTCT-2 and HTCT-3

NingBo ZhongJiang High Strength Bolts Co.,Ltd

Address: XiJingTang LuoTuo NingBo, ZheJiang, China
Tel: +86-574-86530577
Fax: +86-574-86530877
Web: www.zhongjiangfstn.com

TEST CERTIFICATE

Customer: YAMSHIN INDUSTRY CO.INC	Order No: 019767		Lot No.: WB92-3293	
	Product Description: 3/4"-10X12FT 73 PCS			
	Specification ASTM A449 TYPE 1 THREADED STUD		Heat No.: WB92-3293	
	Material AISI 5140		Head Marks:--------	
	Surface Finish	Black ☐	ZP ☐	HDG ☑ Bright ☐

Chemical Analysis

Element	C	Mn	P	S	Si	Cr	Ni	Cu	Mo
%	0.41	0.59	0.017	0.013	0.27	0.92	0.015	0.013	----

Mechanical Properties

Test Item	Test method	Standard	Results	Sampling	Pass
Core Hardness (HRC)	ASTM F606	25-34	28	4	OK
Tensile Strength (KSI)	ASTM F606	120	131	3	OK
Yield load (KSI)	ASTM F606	92	115	3	OK
Elongation (%)	ASTM F606	14	15	3	OK
Reduction of Area (%)	ASTM F606	35 (min)	39	3	OK

Dimensions of Spec

Test Item	Spec.	Inspection Results	Sampling	Remark
Major diameter	0.735"-0.748"	0.740"-0.742"	32	OK
Nominal length	144"-146"	144.7"-144.9"	32	OK
Go Gauge	/	/	/	/
No-Go Gauge	/	/	/	/
Appearance				OK

We hereby certify that all the above results are original from our actual testing, and the products have proved to comply with the relevant standards.
Signed on Behalf of NingBo ZhongJiang High Strength Bolts Co., Ltd.
Date:2009-11-25

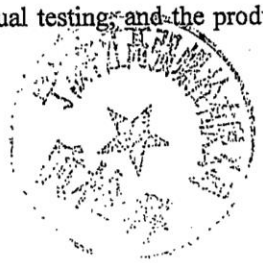

Figure A-9. ¾-in. (19-mm) Diameter Threaded Rod, Test Nos. HTCT-2 and HTCT-3

潍坊钢铁集团有限公司

WEIFANG IRON&STEEL CO., LTD.

Certificate No.: Quality Record No.:

Customer: Contract No.:

Delivery Spate: List No.:

Material: 40Cr 質量證明表Quality Certificate

Steel Size: Φ 20 Length: Date Of Delivery:

Lot No.	Steel Grade	Q.T.Y.	Weight	Heat No.	Chemical Composition(%)										
					C	Mn	P	S	Si	Cr	Ni	Cu	Mo	Alt	
					x100	x100	x1000	x1000	x100	x1000	x1000	x1000	x1000	x1000	
WB92-3293	40Cr	14	31.520	WB92-3293	41	59	17	13	27	920	15	13	/	/	

Yield strength	Tensile strength	Elongation	Reduction	Charpy(AKv)		Hardness	Macroetch Meet			Hot Forging
				°C	J	HRC	surface Condition(S	Random Condition(R	Center Segregation(C	
Mpa	Mpa	%	%							Hot Working
1070	995	12	56		≥47		1	1.5	0.5	
1080	995	12	52				1.5	1.5	0.5	

Figure A-10. ¾-in. (19-mm) Diameter Threaded Rod, Test Nos. HTCT-2 and HTCT-3

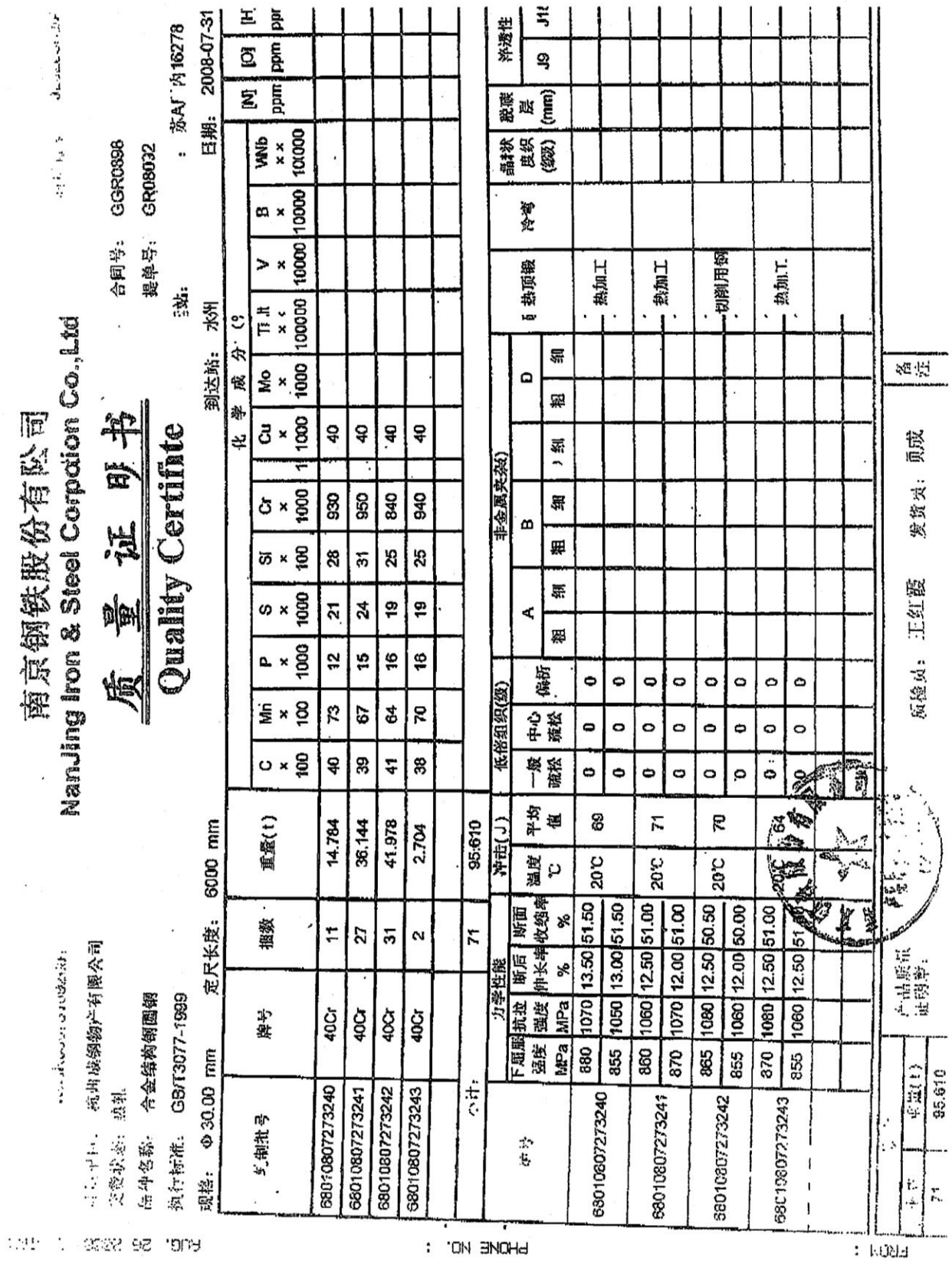

Figure A-11. ¾-in. (19-mm) Diameter Threaded Rod, Test Nos. HTCT-2 and HTCT-3

Revised

20903

NINGBO ZHENGHAI YONGDING FASTENER CO.,LTD
TEST CERTIFICATE

Product产品名称 : THREAD ROD 牙条
Standard No产品标准: ASTM A449-07b
Grades of Strength 性能等级: TYPE1
Size规格 :3/4"-10*12FT
Material 材质: 45#
P/O No合同号:020903

序 号	项目 TESTING ITEM		实际值 TESTING RESULTS	备注: "√" 表示合格
	名 称	标准要求 Standard		
1	Thread Diameter 螺纹外径	18.677-19.004	18.78-18.88	√
2	NO go gauge 止规 2A	OK	OK	√
3	GO gauge 通规 2A	OK	OK	√
4	Screw Length 螺钉长度L	3654.552-3660.648	3656-3658	√
5	Surface finished 表面处理	BLACK	OK	√
6	Head Marking 标记	NO	OK	√
7	Visual 外观	OK	OK	√
Quantity 批量	330 (Pcs)	抽样数 Testing Quantity:	20 (Pcs)	

化学成份Chemical Composition Heat No.9476653 Dia.20mm

Cast No.	C (%)≥	Si (%)≤	Mn(%)≤	P (%)≤	S (%)≤	Cr (%) ≤
Requirement Standerd	0.40	0.40	1.00	0.035	0.035	1.25
Testresults	0.46	0.28	0.63	0.016	0.019	1.26

机械性能Mechanical property

机加工试样				
抗拉强度 Tensile Strength (Stress) σb≥120 (Ksi)	屈服强度 Yield Strength (Stress) σp≥92 (Ksi)	断面收缩率 Contraction ψ≥35 %	延伸率 Elongation δ≥14 %	硬度 Test HRC19-30
139	112	41	17.0	27
140	114	41.2	17.6	28
142	119	41.6	17.2	28.5
判定JUDGEMENT	OK			

Organizer编制 : Chen ju gang
Auditing审核 : Guo feng shu

Date : Sep.13.2010
Date : Sep.13.2010

品管部
QUALITY CONTROL DEPT.

Figure A-12. ¾-in. (19-mm) Diameter Threaded Rod, Test Nos. HTCT-2 and HTCT-3

NO. : 460574

QINGDAO YUYE DEVELOPING GROUP CO.,LTD
INSPECTION CERTIFICATE

Customer: Ningbo Economic & Trading Co.,Ltd
Delivery Date.: Jun.19, 2010
Contract No. 29019930522009391

Steel: Excellent Round Carbon Steel
Specification (mm): Ø20
Steel grade.: 45#

Licence Cert. ISO9001
Approved No.:107
QG-QR-01-8.2.4-16

Heat No.	Weight:(t)	Qty	Chemical Composition (%)											Mechanical capability				
			C	Si	Mn	P	S	Ni	Cr	Cu	V	Mo		Y.S Mpa	T.S Mpa	EL. %	RA. %	HB
9476647	5.66	2	0.46	0.23	0.61	0.015	0.012		1.25									
9476653	28	11	0.46	0.28	0.63	0.016	0.019		1.26									
9476655	33.24	13	0.46	0.21	0.61	0.022	0.016		1.26									
9476660	30	12	0.46	0.23	0.59	0.015	0.014		1.28									
Total:	96.9	38																

Remarks: 1.Sort of Steel: using for pressing and machining
2. Delivery status: Hot forged
3.Surface & size of exterior: ok
4.Producing licence No. GB/T699-1999
5.Perform Standrad: GB/T702-2004

Add: No.5, Zunyi Rd, Qingdao, Shandong
Tel: 0532-84816761

Zip Code: 266043
Fax: 0532-84816057

Made by Jufeng Zhang

Date: Jun.28, 2010

TESTING → No
→ cut losses
→ ~~chad~~ → scrap material

→ Pull out threaded Rod
→ Scrap the → 449

Figure A-13. ¾-in. (19-mm) Diameter Threaded Rod, Test Nos. HTCT-2 and HTCT-3

Chemical and Physical Test Report
Made and Melted in USA

G-163740

SHIP TO	INVOICE TO	SHIP DATE
SIOUX CITY FOUNDRY INC 801 DIVISION STREET 800-831-0874 SIOUX CITY, IA 51102	SIOUX CITY FOUNDRY INC ACCTS PAYABLE PO BOX 3067 SIOUX CITY, IA 51102	11/08/10 CUST. ACCOUNT NO 60044062

PRODUCED IN: CARTERSVILLE

SHAPE + SIZE	GRADE	SPECIFICATION	SALES ORDER	CUST P.O. NUMBER
W3 X 5.7# S-BEAM	A572/50/992	ASTM A572 GR50-07, ASTM A992 -06A, ASTM A709 GR50-09A	0123380-05	129309W-05

HEAT I.D.	C	Mn	P	S	Si	Cu	Ni	Cr	Mo	V	Nb	B	N	Sn	Al	Ti	Ca	Zn	C Eqv				
G104598	14	.91	012	.020	.22	.30	.09	.05	.022	.016	.002	.0003	.0100	.010	.002	.00100	.00030	.00710	.374				

Mechanical Test: Yield 53300 PSI, 367.49 MPA Tensile: 74200 PSI, 511.59 MPA %El: 19.2/8in, 19.2/200MM
Customer Requirements: CASTING: STRAND CAST
Comment: NO WELD REPAIRMENT PERFORMED. STEEL NOT EXPOSED TO MERCURY.
Mechanical Test: Yield 53900 PSI, 371.63 MPA Tensile: 73300 PSI, 505.39 MPA %El: 20.0/8in, 20.0/200MM
Customer Requirements: CASTING: STRAND CAST
Comment: NO WELD REPAIRMENT PERFORMED. STEEL NOT EXPOSED TO MERCURY.

PRODUCED IN: CARTERSVILLE

SHAPE + SIZE	GRADE	SPECIFICATION	SALES ORDER	CUST P.O. NUMBER
W3 X 5.7# S-BEAM	A572/50/992	ASTM A572 GR50-07, ASTM A992 -06A, ASTM A709 GR50-09A	0123380-05	129309W-05

HEAT I.D.	C	Mn	P	S	Si	Cu	Ni	Cr	Mo	V	Nb	B	N	Sn	Al	Ti	Ca	Zn	C Eqv				
G104599	14	.92	014	.023	.22	.28	.09	.05	.025	.016	.002	.0003	.0095	.010	.002	.00100	.00050	.00740	.373				

Mechanical Test: Yield 54800 PSI, 377.83 MPA Tensile: 74700 PSI, 515.04 MPA %El: 19.5/8in, 19.5/200MM
Customer Requirements: CASTING: STRAND CAST
Comment: NO WELD REPAIRMENT PERFORMED. STEEL NOT EXPOSED TO MERCURY.
Mechanical Test: Yield 53800 PSI, 370.94 MPA Tensile: 73700 PSI, 508.14 MPA %El: 21.3/8in, 21.3/200MM
Customer Requirements: CASTING: STRAND CAST
Comment: NO WELD REPAIRMENT PERFORMED. STEEL NOT EXPOSED TO MERCURY.

Customer Notes
NO WELD REPAIRMENT PERFORMED. STEEL NOT EXPOSED TO MERCURY.

All manufacturing processes including melt and cast, occurred in USA. MTR complies with EN10204 3.1B

THE ABOVE FIGURES ARE CERTIFIED EXTRACTS FROM THE ORIGINAL CHEMICAL AND PHYSICAL TEST RECORDS AS CONTAINED IN THE PERMANENT RECORDS OF COMPANY.

Bhaskar Yalamanchili
Quality Director
Gerdau Ameristeel

Metallurgical Services Manager
CARTERSVILLE STEEL MILL

Seller warrants that all material furnished shall comply with specifications subject to standard published manufacturing variations. NO OTHER WARRANTIES, EXPRESSED OR IMPLIED, ARE MADE BY THE SELLER, AND SPECIFICALLY EXCLUDED ARE WARRANTIES OF MERCHANTABILITY AND FITNESS FOR A PARTICULAR PURPOSE.
In no event shall seller be liable for indirect, consequential or punitive damages arising out of or related to the materials furnished by seller.
Any claim for damages for materials that do not conform to specifications must be made from buyer to seller immediately after delivery of same in order to allow the seller the opportunity to inspect the material in question

Figure A-14. S3x5.7 Line Posts, Test Nos. HTCT-2 and HTCT-3

From: 281-391-2044 To: The Boulder Company Date: 5/24/2012 Time: 3:34:00 PM Page 2 of 2

May 24, 2012

K-T Bolt Manufacturing Company, Inc.®
1150 Katy Fort-Bend Road
Katy, Texas 77494
Ph: 281-391-2196 Fax: 281-391-2673
shirley@k-tbolt.com

Date: May 24,2012

Original Mill Test Report

Company:	The Boulder Company
Part Description:	125 pcs ⅞ - 11X 9 ½"Finish Hex Bolts
Material Specification:	A307 A
Coating Specification	ASTM F2329-05
Purchase Order Number:	161005
Lot Number:	08334-1
Comments:	None
Material Heat Number:	JK1110419701
Testing Laboratory:	Nucor

Chemical Analysis – Weight Percent

C	Mn	P	S	Si	Cu	Cr	Ni	Mo	V	Cb	Sn	Al	B	Ti	Ca	Co	N
.13	.69	.018	.030	.20	.26	.12	.09	.020	.003	.002	-	-	-	-	-	-	-

100% Melted & Manufactured in the USA. Values reflect originating Steel Mill

Tensile and Hardness Test Results

Property	#1 psi
Tensile:	70,550
Proof/Yield:	52,360
Elongation:	27.5
ROA:	-
Hardness:	149 HBN

Comments

Test results meet mechanical requirements of specification.

All reports are the exclusive property of K-T Bolt Manufacturing Company, Inc.® Any reproduction must be in their entirety and at the permission of same.

Figure A-15. Cable Hook Bolts, Test No. HTCT-2

Customer Part No
MFG SMP No AST3043SE10S Customer Spec No ASTM A 741

nished g#	Diameter in	Lay Length (in.)	Breaking Load lbf	Adherence Appearance of Wires	Steel Ductility
609409	0.79	6	46525	Pass	Pass
609459	0.75	7	46548	Pass	Pass
609513	0.75	7.3	49219	Pass	Pass

terial was melted and made in the U.S.A.
e undersigned certifies that the results are actual results and conform to the specification indicated
contained in the records of this Corporation.

ocess Control Manager Notary Public Commission Expires

BEKAERT
EXTRA HIGH STRENGTH

LENGTH	DIAM.	CONST.	CLASS	REEL #	SPECIFICATION
1966	3/04	21	CL A	95609409	ASTM A 741

3/4" 3X7 CL A GALV GUIDERAIL SHORTS
AST3043SE10S
GROSS WT 2009.85 Lbs. NET WT 1684.88 Lbs.
nc Hot NON-FLOODED

Figure A-16. ¾-in. (19-mm) Dia. 3x7 Cable Guiderail, Test Nos. HTCT-2 and HTCT-3

BENNETT BOLT WORKS, INC.

12 Elbridge Street
P.O. Box 922
Jordan, New York 13080

PH 315-689-3981
FX 315-689-3999

MIDWEST ROADSIDE SAFETY FACILITY
UNIV. OF NEBRASKA
1901 Y STREET BLDG C
LINCOLN, NE 68588-0601
(402) 472-9064
ATTN: BOB BIELENBERG

SEPT 21,2007

CABLE FITTINGS FOR TL3-TL4 GUARDRAIL CABLE CRASH TEST

4 EA CG 198N-H 87M
TURNBUCKLE CABLE ASSEMBLY W/ 2 WEDGES
7/8-9 X 11" FLATTENED RODS A449

16 EA CG 184N-H 87M
CABLE END ASSEMBLY W/ WEDGE
7/8-9 X 11" FLATTENED ROD A449

James Lemieux
MANAGER QUALITY ASSURANCE

HT NO 734281 7/8-9 x 11" Flattened Rods A449
Mfg. - Southeastern Bolt & Screw, Birmingham, AL

Order NO 75410-75590 Malleable Iron Casting ASTM - A47 Grade 32510
Mfg. - Buck Co., Inc., Quarryville, PA

Order NO 6002236 Malleable Iron Casting Wedge ASTM - A47
Grade 32510
Mfg. - Buck Co., Inc., Quarryville, PA

Figure A-17. ⅞-in. (22.2-mm) Dia. Cable End Assembly, Test Nos. HTCT-2 and HTCT-3

Southeastern Bolt & Screw, Inc
1037 16th Avenue West
Birmingham, AL 35204
(205) 328-4551

MATERIAL TEST REPORT

DATE: July 7, 2004
CUSTOMER: Bennett Bolt Works, Inc.
CUSTOMER P.O.: 013218
QUANITY: 57
LAB REPORT NO.: 11065
SPECIFICATION: A449 Type 1
SIZE: 7/8-9 X 48 Double End Rod
SURFACE COATING: A153 Class C
LOT NO.: L15532 (296489-01)
MARKINGS: SBS, Three Radial Lines

CHEMISTRY

C	MN	P	S	SI	V	Cb	CR	MO
.47	.75	.010	.030	.20	.013			

MATERIAL GRADE: 1045
HEAT NO.: 734281

MECHANICAL PROPERTIES

PROOF LOAD

Applied Tensile Force, lbf	39,250
Length Measurement Differential, in	-0.0005

AXIAL TENSILE

Axial Tensile Load, lbf	60,600
Failure Location	Threads

WEDGE TENSILE

10 Degree Wedge Tensile Load, lbf	
Failure Location	

HARDNESS MEASUREMENTS

Rockwell C Scale	28

TEST METHODS: ASTM F606

We certify that the above test results do conform to the requirements of the specifications as shown. These test results relate only to the item tested. This document may be reproduced, but only in its entirety. All material was melted and manufactured in the USA.

Jim Waddell, Quality Assurance Manager

Figure A-18. ⅞-in. (22.2-mm) Dia. Cable End Assembly, Test Nos. HTCT-2 and HTCT-3

BUCK COMPANY, INC.

897 Lancaster Pike, Quarryville, PA 17566-9738

Phone (717) 284-4114 Fax (717) 284-4321

www.buckcompany.com greatcastings@buckcompany.com

MATERIAL CERTIFICATION

Date 8-30-07 Form# CERT-7A Rev C 4-21-06

CUSTOMER Bennett Bolt, Inc.

ORDER NUMBER 75590

PATTERN NUMBER CGBBWTH REV. —

This is to certify that the castings listed conform to the following specifications and comply in all respects with the drawing or ordered requirements. All Quality Assurance provisions and / or Quality Assurance requirements and / or supplementary Quality Assurance provisions have been completed and accepted. SPC data is on file and available upon request.

Type Material: Malleable Iron

Specifications: Astm-A47

Grade or Class: 32510

Heat Number: 904

MECHANICAL PROPERTIES

Tensile Str. PSI 47502

Yield Str. PSI 45,032

Elongation 22

PHYSICAL PROPERTIES

Brinell Hardness 163

PCS SHIPPED 20

1 of 1

CHEMICAL ANALYSIS

Total Carbon 3.10

Silicon 2.86

Manganese .34

Sulfur .016

Phosphorus .020

Chrome .045

Magnesium .049

Copper .052

DATE SHIPPED 8-30-07

Quality Assurance Representative

Quality Castings

ISO 9001: 2000 CERTIFIED

Ferritic and Pearlitic Malleable Iron, Gray and Ductile Iron, Brass, Aluminum

Figure A-19. ⅞-in. (22.2-mm) Dia. Cable End Assembly, Test Nos. HTCT-2 and HTCT-3

BUCK COMPANY, INC.

897 Lancaster Pike, Quarryville, PA 17566-9738
Phone (717) 284-4114 Fax (717) 284-4321
www.buckcompany.com greatcastings@buckcompany.com

MATERIAL CERTIFICATION

Date 11/14/06 Form Number CERT-7C REV. A

CUSTOMER: Bennett Bolt Works

ORDER NUMBER 75410

PATTERN NUMBER CGBBHT REV. —

This is to certify that the castings listed conform to the following specifications and comply in all respects with the drawing or ordered requirements. All Quality Assurance provisions and / or Quality Assurance requirements and / or supplementary Quality Assurance provisions have been completed and accepted. SPC data is on file and available upon request. Melted & Manufactured in the USA.

Type Material: Malleable Iron

Specifications: ASTM-A47

Grade or Class: 32510

Heat Number: OP5

MECHANICAL PROPERTIES

Tensile Str. PSI 52,112

Yield Str. PSI 35,584

Elongation 15

PHYSICAL PROPERTIES

Brinell Hardness 121

PCS SHIPPED 105

CHEMICAL ANALYSIS

Total Carbon 2.53

Silicon 1.57

Manganese .33

Sulfur .130

Phosphorus .015

Chrome .030

Magnesium .001

Copper .15

DATE SHIPPED 11/14/06

1 of 1

Quality Assurance Representative

Quality Castings

ISO 9002 CERTIFIED

Ferritic and Pearlitic Malleable Iron, Gray and Ductile Iron • Brass • Aluminum

Figure A-20. ⅞-in. (22.2-mm) Dia. Cable End Assembly, Test Nos. HTCT-2 and HTCT-3

BUCK COMPANY, INC.

897 Lancaster Pike, Quarryville, PA 17566-9738

Phone (717) 284-4114 Fax (717) 284-4321

www.buckcompany.com greatcastings@buckcompany.com

MATERIAL CERTIFICATION

Date 6-8-07 Form# CERT-7A Rev C 4-21-06

CUSTOMER Bennett Bolt Works, Inc.

ORDER NUMBER 6002236

PATTERN NUMBER Wedge REV. Orig

This is to certify that the castings listed conform to the following specifications and comply in all respects with the drawing or ordered requirements. All Quality Assurance provisions and / or Quality Assurance requirements and / or supplementary Quality Assurance provisions have been completed and accepted. SPC data is on file and available upon request.

Type Material: Malleable Iron

Specifications: ASTM-A47

Grade or Class: 32510

Heat Number: 109

MECHANICAL PROPERTIES

Tensile Str. PSI 38,592

Yield Str. PSI 39,273

Elongation 16

PHYSICAL PROPERTIES

Brinell Hardness 121

PCS SHIPPED 10,951

1 of 1

CHEMICAL ANALYSIS

Total Carbon 2.64

Silicon 1.54

Manganese .30

Sulfur .111

Phosphorus .030

Chrome .035

Magnesium .08

Copper .134

DATE SHIPPED 6-8-07

Lisa M Bidwell

Quality Assurance Representative

Quality Castings

ISO 9001: 2000 CERTIFIED

Ferritic and Pearlitic Malleable Iron, Gray and Ductile Iron, Brass, Aluminum

Figure A-21. ⅞-in. (22.2-mm) Dia. Cable End Assembly, Test Nos. HTCT-2 and HTCT-3

Appendix B. Bogie Test Results

The results of the recorded data from each accelerometer for every dynamic bogie test are provided in the summary sheets found in this appendix. Summary sheets include acceleration, velocity, and deflection vs. time plots as well as force vs. deflection and energy vs. deflection plots.

MIDWEST ROADSIDE SAFETY FACILITY

Bogie Test Summary

Test Information	4 Cable Terminal Release Bracket	
Test Number:	HTCT-2	
Test Date:	20-Jun-2012	
Failure Type:	Multiple	
Post Properties		
Post Type:	Multiple	
Post Size:	Multiple	Multiple
Post Length:	Multiple in.	
Embedment Depth:	Multiple in.	
Orientation:	Weak Axis	
Soil Properties		
Gradation:	NA	
Moisture Content:	NA	
Compaction Method:	NA	
Soil Density, γd:	NA	
Bogie Properties		
Impact Velocity:	52.84 mph (77.5 fps)	23.62 m/s
Impact Height:	19 in.	48.3 cm
Bogie Mass:	1861 lbs	844.1 kg
Data Acquired		
Acceleration Data:	EDR-3	
Camera Data:	0	

Test Results Summary		
Max. Deflection:	793.6	in.
Peak Force:	15.9	k
Initial Linear Stiffness:	NA	k/in.
Total Energy:	1534.4	k-in.

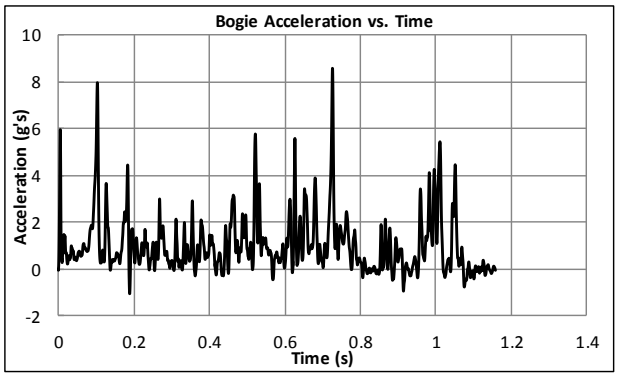

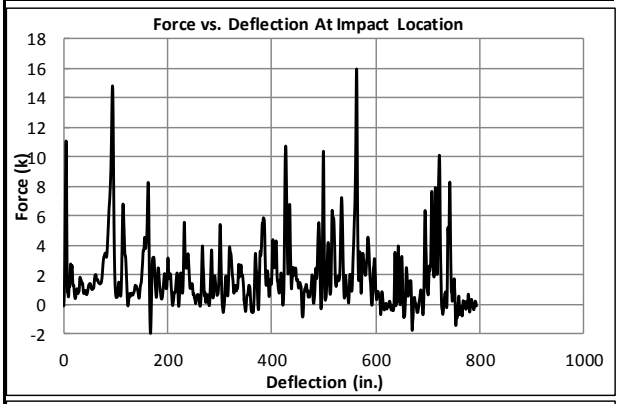

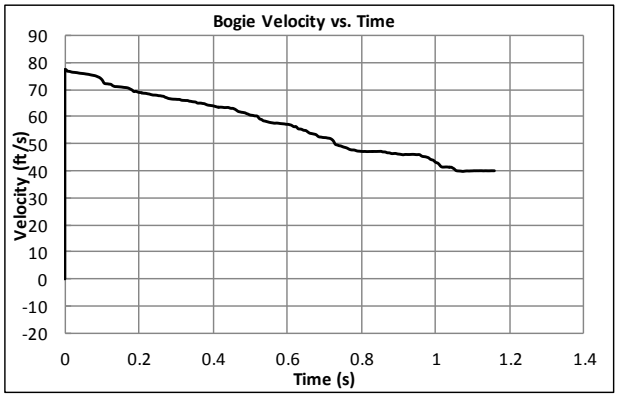

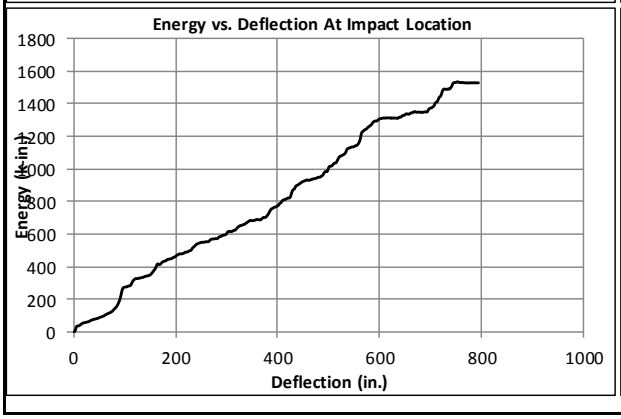

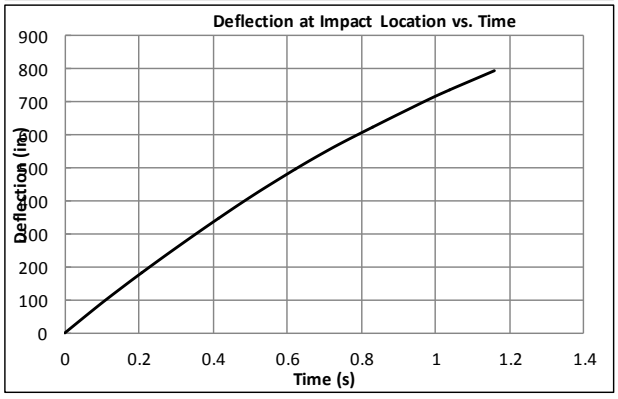

Figure B-1. Test No. HTCT-2 Results (EDR-3)

MIDWEST ROADSIDE SAFETY FACILITY

Bogie Test Summary

Test Information	4 Cable Terminal Release Bracket	
Test Number:	HTCT-2	
Test Date:	20-Jun-2012	
Failure Type:	Multiple	
Post Properties		
Post Type:	Multiple	
Post Size:	Multiple	Multiple
Post Length:	Multiple in.	
Embedment Depth:	Multiple in.	
Orientation:	Weak Axis	
Soil Properties		
Gradation:	NA	
Moisture Content:	NA	
Compaction Method:	NA	
Soil Density, γd:	NA	
Bogie Properties		
Impact Velocity:	52.84 mph (77.5 fps)	23.62 m/s
Impact Height:	19 in.	48.3 cm
Bogie Mass:	1861 lbs	844.1 kg
Data Acquired		
Acceleration Data:	SLICE	
Camera Data:	0	

Test Results Summary

Max. Deflection:	1197.8	in.
Peak Force:	16.1	k
Initial Linear Stiffness:	#DIV/0!	k/in.
Total Energy:	2083.0	k-in.

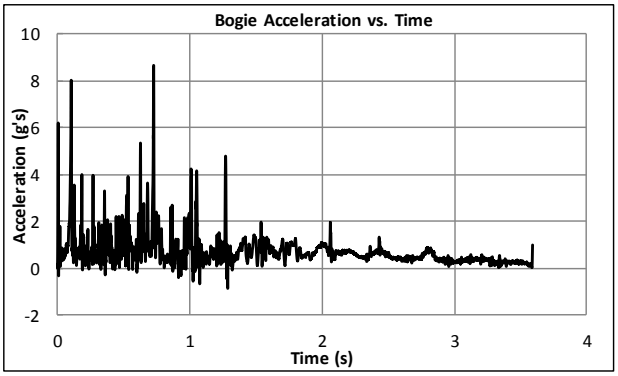

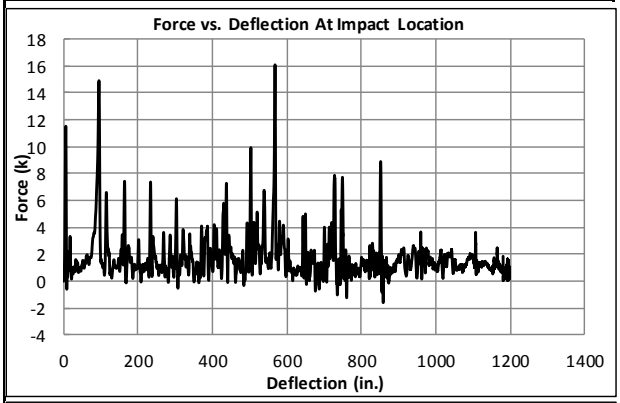

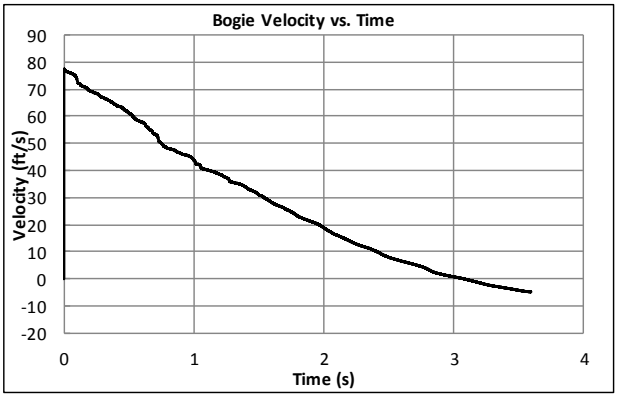

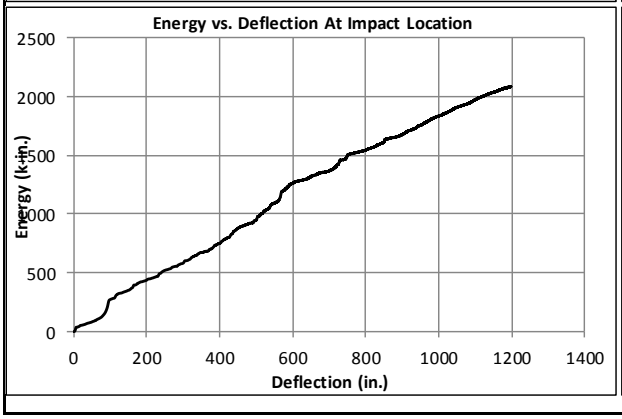

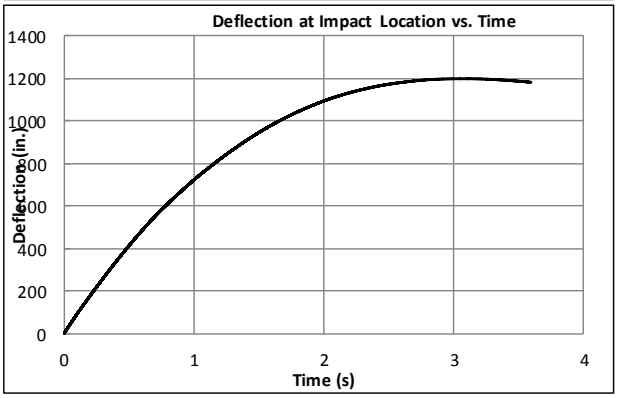

Figure B-2. Test No. HTCT-2 Results (SLICE)

MIDWEST ROADSIDE SAFETY FACILITY

Bogie Test Summary

Test Information	4 Cable Terminal Release Bracket		
Test Number:	HTCT-3		
Test Date:	26-Jun-2012		
Failure Type:	NA		
Post Properties			
Post Type:	See Drawings		
Post Size:	See Drawings		
Post Length:	See Drawings		
Embedment Depth:	NA		
Orientation:	25 degrees		
Soil Properties			
Gradation:	NA		
Moisture Content:	NA		
Compaction Method:	NA		
Soil Density, γd:	NA		
Bogie Properties			
Impact Velocity:	51.14 mph (75 fps)	22.86 m/s	
Impact Height:	19 in.	48.3 cm	
Bogie Mass:	1853 lbs	840.5 kg	
Data Acquired			
Acceleration Data:	EDR-3		
Camera Data:	0		

Test Results Summary			
Max. Deflection:	197.4	in.	
Peak Force:	6.8	k	
Initial Linear Stiffness:	NA	k/in.	
Total Energy:	310.2	k-in.	

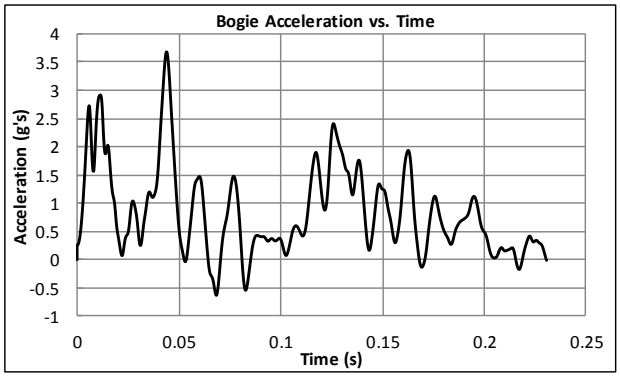

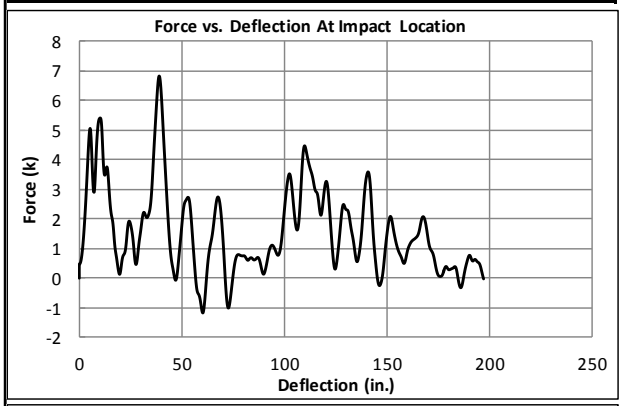

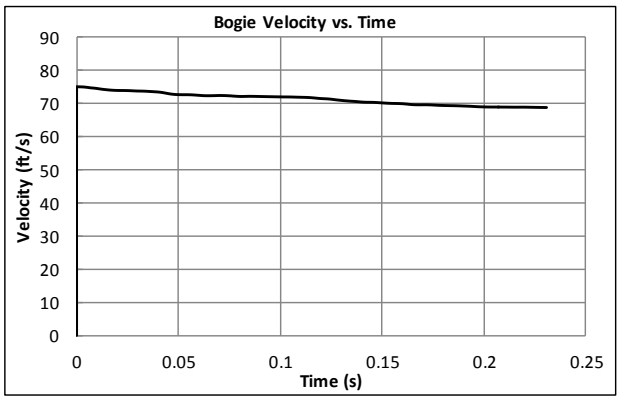

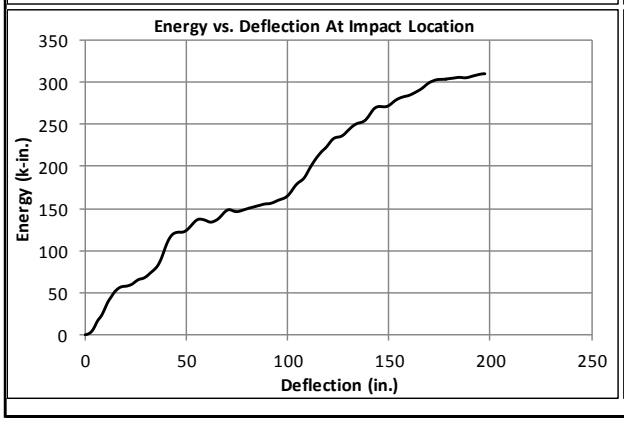

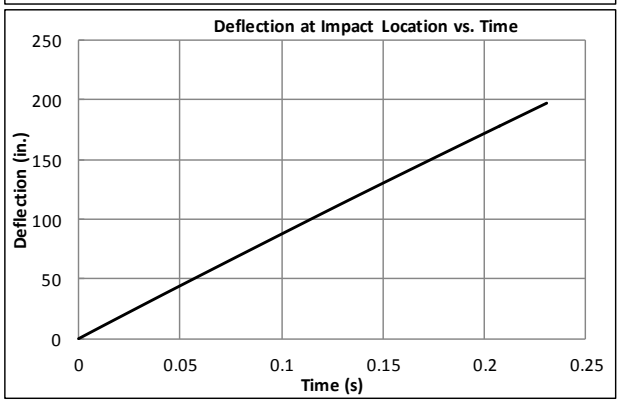

Figure B-3. Test No. HTCT-3 Results (EDR-3)

MIDWEST ROADSIDE SAFETY FACILITY

Bogie Test Summary

Test Information	4 Cable Terminal Release Bracket	
Test Number:	HTCT-3	
Test Date:	26-Jun-2012	
Failure Type:	Multiple	
Post Properties		
Post Type:	See Drawings	
Post Size:	See Drawings	
Post Length:	See Drawings	
Embedment Depth:	NA	
Orientation:	25 degrees	
Soil Properties		
Gradation:	NA	
Moisture Content:	NA	
Compaction Method:	NA	
Soil Density, γd:	NA	
Bogie Properties		
Impact Velocity:	51.14 mph (75 fps)	22.86 m/s
Impact Height:	19 in.	48.3 cm
Bogie Mass:	1853 lbs	840.5 kg
Data Acquired		
Acceleration Data:	SLICE	
Camera Data:	0	

Test Results Summary		
Max. Deflection:	185.1	in.
Peak Force:	6.3	k
Initial Linear Stiffness:	NA	k/in.
Total Energy:	310.6	k-in.

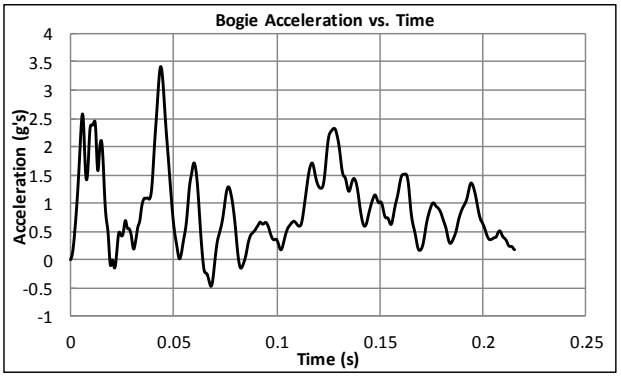

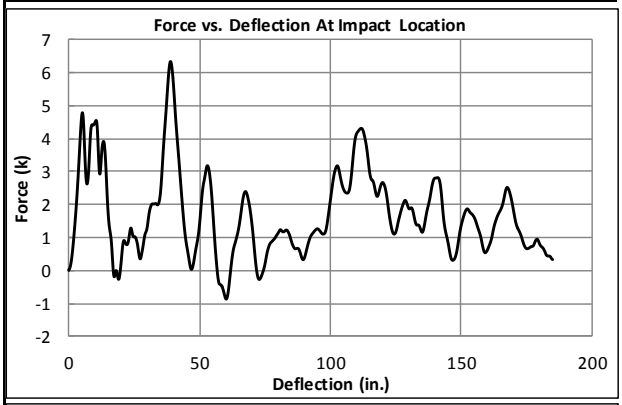

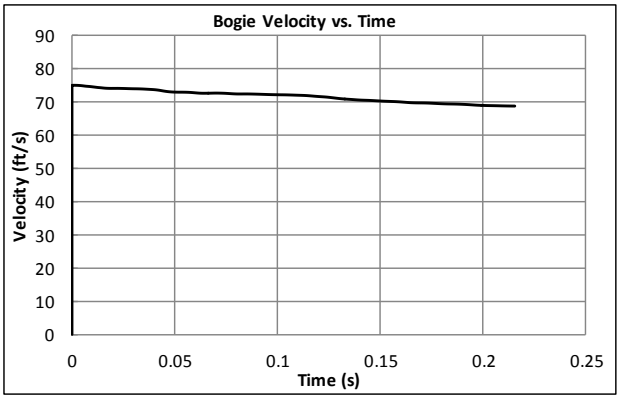

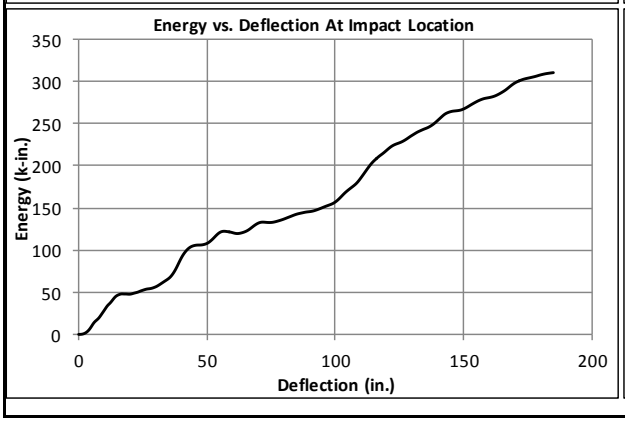

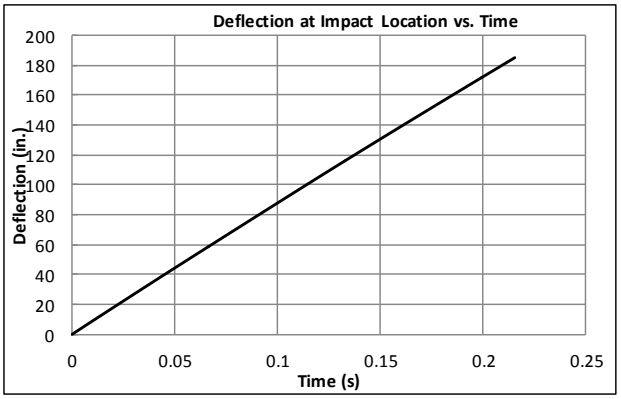

Figure B-4. Test No. HTCT-3 Results (SLICE)

END OF DOCUMENT