TESTING CERT # 2937.01

Midwest States Regional Pooled Fund Research Program
Fiscal Years 2011 (Year 21)
Research Project Number TPF-5(193) Supplemental #33
NDOR Sponsoring Agency Code RPFP-11-MGS-3

SAFETY PERFORMANCE EVALUATION OF THE NON-BLOCKED MIDWEST GUARDRAIL SYSTEM (MGS)

Submitted by

Kevin D. Schrum, M.S.C.E., E.I.T.
Graduate Research Assistant

Karla A. Lechtenberg, M.S.M.E., E.I.T.
Research Associate Engineer

Robert W. Bielenberg, M.S.M.E., E.I.T.
Research Associate Engineer

Scott K. Rosenbaugh, M.S.C.E., E.I.T.
Research Associate Engineer

Ronald K. Faller, Ph.D., P.E.
Research Assistant Professor
Interim MwRSF Director

John D. Reid, Ph.D., P.E.
Professor

Dean L. Sicking, Ph.D., P.E.
Emeritus Professor
Former MwRSF Director

MIDWEST ROADSIDE SAFETY FACILITY
Nebraska Transportation Center
University of Nebraska-Lincoln
130 Whittier Research Center
2200 Vine Street
Lincoln, Nebraska 68583-0853
(402) 472-0965

Submitted to

MIDWEST STATES REGIONAL POOLED FUND PROGRAM
Nebraska Department of Roads
1500 Nebraska Highway 2
Lincoln, Nebraska 68502

MwRSF Research Report No. TRP-03-262-12

January 24, 2013

TECHNICAL REPORT DOCUMENTATION PAGE

1. Report No. TRP-03-262-12	2.	3. Recipient's Accession No.
4. Title and Subtitle Safety Performance Evaluation of the Non-Blocked Midwest Guardrail System (MGS)		5. Report Date January 24, 2013 6.
7. Author(s) Schrum, K.D., Lechtenberg, K.A., Bielenberg, R.W., Rosenbaugh, S.K., Faller, R.K., Reid, J.D., and Sicking, D.L.		8. Performing Organization Report No. TRP-03-262-12
9. Performing Organization Name and Address Midwest Roadside Safety Facility (MwRSF) Nebraska Transportation Center University of Nebraska-Lincoln 130 Whittier Research Center 2200 Vine Street Lincoln, Nebraska 68583-0853		10. Project/Task/Work Unit No. 11. Contract © or Grant (G) No. TPF-5(193) Supplemental #33
12. Sponsoring Organization Name and Address Midwest States Regional Pooled Fund Program Nebraska Department of Roads 1500 Nebraska Highway 2 Lincoln, Nebraska 68502		13. Type of Report and Period Covered Final Report: 2011-2012 14. Sponsoring Agency Code RPFP-11-MGS-3
15. Supplementary Notes Prepared in cooperation with U.S. Department of Transportation, Federal Highway Administration.		

16. Abstract (Limit: 200 words)

The roadway width required to install a guardrail system with a 12-in. (305-mm) blockout is not always available. In response, proprietary non-blocked W-beam guardrail systems were developed and successfully crash tested. However, the use of proprietary systems requires the State Departments of Transportation to maintain inventory of specialized components. Therefore, a non-proprietary, non-blocked W-beam guardrail system was developed.

The Midwest Guardrail System (MGS), with a 31-in. (787-mm) nominal top rail height, was chosen for modification due to its exceptional redirective capacity. For this research, the 12-in. (305-mm) blockout was removed, and a 12-in. (305-mm) long section of 12-gauge (2.66-mm) W-beam guardrail was utilized as a backup plate at rail-to-post connections. This design was successfully tested using a small car (test no. 3-10) and a pickup truck (test no. 3-11) according to the testing standards established in the *Manual for Assessing Safety Hardware* (MASH). As a result, the non-blocked MGS was recommended for use when roadway width was a limiting parameter. If width is not restricted, it is still recommended to use a 12-in. (305-mm) blockout as designated in the design drawings of the standard MGS.

17. Document Analysis/Descriptors Highway Safety, Crash Test, Roadside Appurtenances, Compliance Test, MASH, MGS, Guardrail, Non-blocked, Non-proprietary		18. Availability Statement No restrictions. Document available from: National Technical Information Services, Springfield, Virginia 22161	
19. Security Class (this report) Unclassified	20. Security Class (this page) Unclassified	21. No. of Pages 236	22. Price

DISCLAIMER STATEMENT

This report was completed with funding from the Federal Highway Administration, U.S. Department of Transportation. The contents of this report reflect the views and opinions of the authors who are responsible for the facts and the accuracy of the data presented herein. The contents do not necessarily reflect the official views or policies of the state highway departments participating in the Midwest States Regional Pooled Fund Program nor the Federal Highway Administration, U.S. Department of Transportation. This report does not constitute a standard, specification, regulation, product endorsement, or an endorsement of manufacturers.

UNCERTAINTY OF MEASUREMENT STATEMENT

The Midwest Roadside Safety Facility (MwRSF) has determined the uncertainty of measurements for several parameters involved in standard full-scale crash testing and non-standard testing of roadside safety features. Information regarding the uncertainty of measurements for critical parameters is available upon request by the sponsor and the Federal Highway Administration.

The Independent Approving Authority (IAA) for the data contained herein was Mario Mongiardini, Ph.D., Post-Doctoral Research Assistant.

ACKNOWLEDGEMENTS

The authors wish to acknowledge several sources that made a contribution to this project: (1) the Midwest States Regional Pooled Fund Program funded by the Illinois Department of Transportation, Iowa Department of Transportation, Kansas Department of Transportation, Minnesota Department of Transportation, Missouri Department of Transportation, Nebraska Department of Roads, Ohio Department of Transportation, South Dakota Department of Transportation, Wisconsin Department of Transportation, and Wyoming Department of Transportation for sponsoring this project; and (2) MwRSF personnel for constructing the barriers and conducting the crash tests.

Acknowledgement is also given to the following individuals who made a contribution to the completion of this research project.

Midwest Roadside Safety Facility

J.C. Holloway, M.S.C.E., E.I.T., Test Site Manager
C.L. Meyer, B.S.M.E., E.I.T., Former Research Associate Engineer
A.T. Russell, B.S.B.A., Shop Manager
K.L. Krenk, B.S.M.A., Maintenance Mechanic
Undergraduate and Graduate Research Assistants

Illinois Department of Transportation

David Piper, P.E., Safety Implementation Engineer
Priscilla A. Tobias, P.E., State Safety Engineer/Bureau Chief

Iowa Department of Transportation

David Little, P.E., Assistant District Engineer
Deanna Maifield, P.E., Methods Engineer
Chris Poole, P.E., Roadside Safety Engineer

Kansas Department of Transportation

Ron Seitz, P.E., Bureau Chief
Rod Lacy, P.E., Metro Engineer
Scott King, P.E., Road Design Leader

Minnesota Department of Transportation

Michael Elle, P.E., Design Standard Engineer

Missouri Department of Transportation

Joseph G. Jones, P.E., Engineering Policy Administrator

Nebraska Department of Roads

Amy Starr, P.E., Research Engineer
Phil TenHulzen, P.E., Design Standards Engineer
Jodi Gibson, Research Coordinator

Ohio Department of Transportation

Michael Bline, P.E., Standards and Geometrics Engineer
Maria Ruppa, P.E., Roadway Standards Engineer

South Dakota Department of Transportation

David Huft, Research Engineer
Bernie Clocksin, Lead Project Engineer

Wisconsin Department of Transportation

Jerry Zogg, P.E., Chief Roadway Standards Engineer
John Bridwell, P.E., Standards Development Engineer
Erik Emerson, P.E., Standards Development Engineer

Wyoming Department of Transportation

William Wilson, P.E., Architectural and Highway Standards Engineer

Federal Highway Administration

John Perry, P.E., Nebraska Division Office
Danny Briggs, Nebraska Division Office

TABLE OF CONTENTS

TECHNICAL REPORT DOCUMENTATION PAGE i

DISCLAIMER STATEMENT ii

UNCERTAINTY OF MEASUREMENT STATEMENT ii

ACKNOWLEDGEMENTS iii

TABLE OF CONTENTS v

LIST OF FIGURES vii

LIST OF TABLES xiii

1 INTRODUCTION 1
- 1.1 Problem Statement 1
- 1.2 Objective 2
- 1.3 Scope 2

2 DESIGN DETAILS 3

3 TEST REQUIREMENTS AND EVALUATION CRITERIA 28
- 3.1 Test Requirements 28
- 3.2 Evaluation Criteria 28
- 3.3 Soil Strength Requirements 29

4 TEST CONDITIONS 31
- 4.1 Test Facility 31
- 4.2 Vehicle Tow and Guidance System 31
- 4.3 Test Vehicles 31
- 4.4 Simulated Occupant 39
- 4.5 Data Acquisition Systems 39
  - 4.5.1 Accelerometers 39
  - 4.5.2 Rate Transducers 40
  - 4.5.3 Pressure Tape Switches 40
  - 4.5.4 Digital Cameras 41

5 FULL SCALE CRASH TEST NO. MGSNB-1 44
- 5.1 Static Soil Test 44
- 5.2 Test No. MGSNB-1 44
- 5.3 Weather Conditions 44
- 5.4 Test Description 45
- 5.5 Barrier Damage 46
- 5.6 Vehicle Damage 47
- 5.7 Occupant Risk 49
- 5.8 Discussion 50

6 FULL SCALE CRASH TEST NO. MGSNB-2 65
6.1 Static Soil Test 65
6.2 Test No. MGSNB-2 65
6.3 Weather Conditions 65
6.4 Test Description 66
6.5 Barrier Damage 67
6.6 Vehicle Damage 69
6.7 Occupant Risk 70
6.8 Discussion 71

7 COMPARISON BETWEEN BLOCKOUT AND NON-BLOCKOUT MGS TESTING 86
7.1 Discussion 87
7.2 Rail-Post Attachment 94
7.3 Importance of the Blockout 96

8 SUMMARY, CONCLUSIONS, AND RECOMMENDATIONS 99

9 IMPLEMENTATION GUIDANCE 104
9.1 Background 104
9.2 MGS Long-Span Guardrail 104
9.3 MGS Adjacent to 2:1 Fill Slopes 106
9.4 MGS on 8:1 Approach Slopes 109
9.5 MGS Adjacent to Curb 109
9.6 MGS Stiffness Transition to Approach Guardrail Transitions 110
9.7 MGS with Reduced Post Spacing 112
9.8 MGS with Various Wood Posts 112

10 REFERENCES 114

11 APPENDICES 116
Appendix A. Material Specifications 117
Appendix B. Vehicle Center of Gravity Determination 162
Appendix C. Static Soil Tests 165
Appendix D. Vehicle Deformation Records 170
Appendix E. Accelerometer and Rate Transducer Data Plots, Test No. MGSNB-1 ... 184
Appendix F. Accelerometer and Rate Transducer Data Plots, Test No. MGSNB-2 ... 200
Appendix G. Summary of Test Results 224

LIST OF FIGURES

Figure 1. Test Installation Layout, Test No. MGSNB-1 5
Figure 2. Post and Splice Details, Test No. MGSNB-1 6
Figure 3. End Rail Details, Test No. MGSNB-1 7
Figure 4. Anchorage Component Details, Test No. MGSNB-1 8
Figure 5. Line Posts, Test No. MGSNB-1 9
Figure 6. BCT Timber Post and Foundation Tube Details, Test No. MGSNB-1 10
Figure 7. BCT Anchor Cable Details, Test No. MGSNB-1 11
Figure 8. Ground Strut and Anchor Bracket Details, Test No. MGSNB-1 12
Figure 9. Rail Section Details, Test No. MGSNB-1 13
Figure 10. Bill of Materials, Test No. MGSNB-1 14
Figure 11. Test Installation Photographs, Test No. MGSNB-1 15
Figure 12. Test Installation Photographs, Test No. MGSNB-1 16
Figure 13. System Layout, Test No. MGSNB-2 17
Figure 14. Post and Splice Details, Test No. MGSNB-2 18
Figure 15. Anchorage Layout, Test No. MGSNB-2 19
Figure 16. Anchorage Component Details, Test No. MGSNB-2 20
Figure 17. Posts 3 through 27, Test No. MGSNB-2 21
Figure 18. BCT Timber Post and Foundation Tube Details, Test No. MGSNB-2 22
Figure 19. BCT Anchor Cable Details, Test No. MGSNB-2 23
Figure 20. Ground Strut and Anchor Bracket Details, Test No. MGSNB-2 24
Figure 21. Rail Section Details, Test No. MGSNB-2 25
Figure 22. Bill of Materials, Test No. MGSNB-2 26
Figure 23. Test Installation Photographs, Test No. MGSNB-2 27
Figure 24. Test Vehicle, Test No. MGSNB-1 33
Figure 25. Vehicle Dimensions, Test No. MGSNB-1 34
Figure 26. Test Vehicle, Test No. MGSNB-2 35
Figure 27. Vehicle Dimensions, Test No. MGSNB-2 36
Figure 28. Target Geometry, Test No. MGSNB-1 37
Figure 29. Target Geometry, Test No. MGSNB-2 38
Figure 30. Camera Locations, Speeds, and Lens Settings, Test No. MGSNB-1 42
Figure 31. Camera Locations, Speeds, and Lens Settings, Test No. MGSNB-2 43
Figure 32. Summary of Test Results and Sequential Photographs, Test No. MGSNB-1 51
Figure 33. Additional Sequential Photographs, Test No. MGSNB-1 52
Figure 34. Additional Sequential Photographs, Test No. MGSNB-1 53
Figure 35. Documentary Photographs, Test No. MGSNB-1 54
Figure 36. Documentary Photographs, Test No. MGSNB-1 55
Figure 37. Impact Location, Test No. MGSNB-1 56
Figure 38. Vehicle Final Position and Trajectory Marks, Test No. MGSNB-1 57
Figure 39. System Damage, Test No. MGSNB-1 58
Figure 40. Guardrail Damage between Post Nos. 13 and 17, Test No. MGSNB-1 59
Figure 41. Guardrail Damage between Post Nos. 13 and 17, Test No. MGSNB-1 60
Figure 42. Post Damage between Post Nos. 13 and 15, Test No. MGSNB-1 61
Figure 43. Post Damage between Post Nos. 16 and 17, Test No. MGSNB-1 62
Figure 44. Vehicle Damage, Test No. MGSNB-1 63
Figure 45. Vehicle Damage, Test No. MGSNB-1 64

Figure 46. Summary of Test Results and Sequential Photographs, Test No. MGSNB-2.....72
Figure 47. Additional Sequential Photographs, Test No. MGSNB-2.....73
Figure 48. Additional Sequential Photographs, Test No. MGSNB-2.....74
Figure 49. Additional Sequential Photographs, Test No. MGSNB-2.....75
Figure 50. Documentary Photographs, Test No. MGSNB-2.....76
Figure 51. Documentary Photographs, Test No. MGSNB-2.....77
Figure 52. Impact Location, Test No. MGSNB-2 78
Figure 53. Vehicle Final Position and Trajectory, Test No. MGSNB-2.....79
Figure 54. System Barrier Damage, Test No. MGSNB-2 80
Figure 55. Guardrail Damage between Posts 13 and 17, Test No. MGSNB-2.....81
Figure 56. Post Damage between Posts 15 and 17, Test No. MGSNB-2 82
Figure 57. Vehicle Damage, Test No. MGSNB-2 83
Figure 58. Vehicle Damage, Test No. MGSNB-2 84
Figure 59. Vehicle Damage, Test No. MGSNB-2 85
Figure 60. Rear View of 2270P Truck Tests – 2214MG-2 (left) and MGSNB-1 (right).....89
Figure 61. Rear View of 1100C Car Tests – 2214MG-3 (left) and MGSNB-2 (right) 90
Figure 62. Barrier Damage 91
Figure 63. Vehicle Damage 92
Figure 64. Longitudinal and Lateral Change in Velocity 93
Figure 65. Bolt Located in Worst Case Location – Pull-Through Behavior Still Occurred.....95
Figure 66. Blockout Holds Rail Up 96
Figure 67. 1100C Crash Tests at Post No. 14 – Blockout Reduces Wheel Snag 98
Figure 68. MGS Long-Span System with Non-Blocked Steel Posts.....107
Figure 69. MGS Adjacent to 2:1 Fill-Slope with Non-Blocked Steel Posts.....108
Figure 70. Use of Non-Blocked Steel Post MGS Upstream of MGS Stiffness Transition 111
Figure A-1. Bill of Materials, Test No. MGSNB-1 118
Figure A-2. Bill of Materials, Test No. MGSNB-2 119
Figure A-3. W6x8 [W152x12.6] Steel Post Material Specifications, Test Nos. MGSNB-1 and MGSNB-2 120
Figure A-4. W6x9 [W152x13.4] Steel Post Material Specifications, Test Nos. MGSNB-1 and MGSNB-2 121
Figure A-5. 6-ft 3-in. (1,905-mm) Long W-Beam MGS Section Material Specifications, Test Nos. MGSNB-1 and MGSNB-2 122
Figure A-6. 12-ft 6-in. (3.8 m) Long W-Beam MGS Section and End Section Material Specifications, Test Nos. MGSNB-1 and MGSNB-2.....123
Figure A-7. 10-in. (254-mm) Long Guardrail Bolt Material Specifications, Test Nos. MGSNB-1 and MGSNB-2.....124
Figure A-8. 10-in (254-mm) Long Guardrail Bolt Material Specifications (cont.), Test Nos. MGSNB-1 and MGSNB-2 125
Figure A-9. 10-in (254-mm) Long Guardrail Bolt Material Specifications (cont.), Test Nos. MGSNB-1 and MGSNB-2 126
Figure A-10. 10-in (254-mm) Long Guardrail Bolt Material Specifications (cont.), Test Nos. MGSNB-1 and MGSNB-2 127
Figure A-11. 10-in (254-mm) Long Guardrail Bolt Material Specifications (cont.), Test Nos. MGSNB-1 and MGSNB-2 128

Figure A-12. 10-in (254-mm) Long Guardrail Bolt Material Specifications (cont.), Test Nos. MGSNB-1 and MGSNB-2 129
Figure A-13. 10-in (254-mm) Long Guardrail Bolt Material Specifications (cont.), Test Nos. MGSNB-1 and MGSNB-2 130
Figure A-14. 5/8-in (16-mm) Diameter Guardrail Nut Material Specifications (cont.), Test Nos. MGSNB-1 and MGSNB-2 131
Figure A-15. 5/8-in (16-mm) Diameter Guardrail Nut Material Specifications (cont.), Test Nos. MGSNB-1 and MGSNB-2 132
Figure A-16. 5/8-in (16-mm) Diameter Guardrail Nut Material Specifications (cont.), Test Nos. MGSNB-1 and MGSNB-2 133
Figure A-17. 5/8-in (16-mm) Diameter Guardrail Nut Material Specifications (cont.), Test Nos. MGSNB-1 and MGSNB-2 134
Figure A-18. 5/8-in (16-mm) Diameter x 1 ½-in (38-mm) Guardrail Bolt Material Specifications (cont.), Test Nos. MGSNB-1 and MGSNB-2 135
Figure A-19. 5/8-in (16-mm) Diameter x 1 ½-in. (38-mm) Guardrail Bolt Material Specifications (cont.), Test Nos. MGSNB-1 and MGSNB-2 136
Figure A-20. 5/8-in (16-mm) Diameter x 1 ½" (38 mm) Guardrail Bolt Material Specifications (cont.), Test Nos. MGSNB-1 and MGSNB-2 137
Figure A-21. 5/8-in (16-mm) Diameter Guardrail Nut, Material Specifications (cont.), Test Nos. MGSNB-1 and MGSNB-2 138
Figure A-22. 5/8-in (16-mm) Diameter Guardrail Nut Material Specifications (cont.), Test Nos. MGSNB-1 and MGSNB-2 139
Figure A-23. 5/8-in (16-mm) Diameter Guardrail Nut Material Specifications (cont.), Test Nos. MGSNB-1 and MGSNB-2 140
Figure A-24. 5/8-in (16-mm) Diameter Guardrail Nut Material Specifications (cont.), Test Nos. MGSNB-1 and MGSNB-2 141
Figure A-25. 5/8-in (16-mm) Diameter Flat Washer Material Specifications, Test Nos. MGSNB-1 and MGSNB-2....142
Figure A-26. W-Beam Backup Plate Material Specifications, Test Nos. MGSNB-1 and MGSNB-2....143
Figure A-27. W-Beam Backup Plate Material Specifications (cont.), Test Nos. MGSNB-1 and MGSNB-2....144
Figure A-28. BCT Timber Post – MGS Height SYP Grade No. 1 or Better, Test Nos. MGSNB-1 and MGSNB-2....145
Figure A-29. Foundation Tube Material Specifications, Test Nos. MGSNB-1 and MGSNB-2....146
Figure A-30. Strut and Yoke Assembly Material Specifications, Test Nos. MGSNB-1 and MGSNB-2 147
Figure A-31. Anchor Bearing Plate Material Specifications, Test Nos. MGSNB-1 and MGSNB-2....148
Figure A-32. BCT Anchor Cable Assembly 3/4-in. (19-mm) Galvanized Wire Rope Material Specifications, Test Nos. MGSNB-1 and MGSNB-2 149
Figure A-33. BCT Anchor Cable Assembly 3/4-in. (19-mm) Galvanized Wire Rope Material Specifications (cont.), Test No. MGSNB-1 150
Figure A-34. Anchor Bracket Assembly Material Specifications, Test Nos. MGSNB-1 and MGSNB-2 151

Figure A-35. 6-in. (152-mm) Long BCT Post Sleeve Material Specifications, Test Nos. MGSNB-1 and MGSNB-2 152
Figure A-36. 5/8-in. (16-mm) Diameter Hex Head Nut Material Specifications, Test Nos. MGSNB-1 and MGSNB-2 153
Figure A-37. 10-in. (254-mm) Long Hex Head Bolt Material Specifications, Test Nos. MGSNB-1 and MGSNB-2 154
Figure A-38. 5/8-in (16-mm) Diameter x 1 ½-in (38-mm) Long Hex Head Bolt Material Specifications, Test Nos. MGSNB-1 and MGSNB-2 155
Figure A-39. 5/8-in (16-mm) Diameter x 1 ½-in (38-mm) Long Hex Head Bolt Material Specifications (cont.), Test Nos. MGSNB-1 and MGSNB-2 156
Figure A-40. 5/8-in (16-mm) Diameter x 1 ½-in (38-mm) Long Hex Head Bolt Material Specifications (cont.), Test Nos. MGSNB-1 and MGSNB-2 157
Figure A-41. 5/8-in (16-mm) Diameter x 1 ½-in (38-mm) Long Hex Head Bolt Material Specifications (cont.), Test Nos. MGSNB-1 and MGSNB-2 158
Figure A-42. 5/8-in (16-mm) Diameter x 1 ½-in (38-mm) Long Hex Head Bolt Material Specifications (cont.), Test Nos. MGSNB-1 and MGSNB-2 159
Figure A-43. 7/8-in. (22-mm) Diameter Hex Head Nut Material Specifications, Test Nos. MGSNB-1 and MGSNB-2 160
Figure A-44. 7/8-in (22-mm) Diameter x 7 ½-in. (191-mm) Long Hex Head Bolt Material Specifications, Test Nos. MGSNB-1 and MGSNB-2 160
Figure A-45. 7/8-in. (22-mm) Diameter Flat Washer Material Specifications, Test Nos. MGSNB-1 and MGSNB-2 160
Figure A-46. Cable Anchor Assembly Black Paint, Test No. MGSNB-2 161
Figure B-1. Vehicle Mass Distribution, Test No. MGSNB-1 163
Figure B-2. Vehicle Mass Distribution, Test No. MGSNB-2 164
Figure C-1. Summary Sheet for Strong Soil Test Results, Test No. MGSNB-1 166
Figure C-2. Test Day Static Soil Strength, Test No. MGSNB-1 167
Figure C-3. Summary Sheet for Strong Soil Test Results, Test No. MGSNB-2 168
Figure C-4. Test Day Static Soil Strength, Test No. MGSNB-2 169
Figure D-1. Floor Pan Deformation Data – Set 1, Test No. MGSNB-1 171
Figure D-2. Floor Pan Deformation Data – Set 2, Test No. MGSNB-1 172
Figure D-3. Occupant Compartment Deformation Data – Set 1, Test No. MGSNB-1 173
Figure D-4. Occupant Compartment Deformation Data – Set 2, Test No. MGSNB-1 174
Figure D-5. Exterior Vehicle Crush (NASS) - Front, Test No. MGSNB-1 175
Figure D-6. Exterior Vehicle Crush (NASS) - Side, Test No. MGSNB-1 176
Figure D-7. Floor Pan Deformation Data – Set 1, Test No. MGSNB-2 177
Figure D-8. Floor Pan Deformation Data – Set 2, Test No. MGSNB-2 178
Figure D-9. Occupant Compartment Deformation Data – Set 1, Test No. MGSNB-2 179
Figure D-10. Occupant Compartment Deformation Data – Set 2, Test No. MGSNB-2 180
Figure D-11. Exterior Vehicle Crush (NASS) - Front, Test No. MGSNB-2 181
Figure D-12. Exterior Vehicle Crush (NASS) - Side, Test No. MGSNB-2 182
Figure D-13. Roof Crush Measurement, Test No. MGSNB-2 183
Figure E-1. 10-ms Average Longitudinal Deceleration (DTS), Test No. MGSNB-1 185
Figure E-2. Longitudinal Occupant Impact Velocity (DTS), Test No. MGSNB-1 186
Figure E-3. Longitudinal Occupant Displacement (DTS), Test No. MGSNB-1 187
Figure E-4. 10-ms Average Lateral Deceleration (DTS), Test No. MGSNB-1 188
Figure E-5. Lateral Occupant Impact Velocity (DTS), Test No. MGSNB-1 189

Figure E-6. Lateral Occupant Displacement (DTS), Test No. MGSNB-1 190
Figure E-7. Vehicle Angular Displacements (DTS), Test No. MGSNB-1.....191
Figure E-8. Acceleration Severity Index (DTS), Test No. MGSNB-1.....192
Figure E-9. 10-ms Average Longitudinal Deceleration (EDR-3), Test No. MGSNB-1 193
Figure E-10. Longitudinal Occupant Impact Velocity (EDR-3), Test No. MGSNB-1 194
Figure E-11. Longitudinal Occupant Displacement (EDR-3), Test No. MGSNB-1 195
Figure E-12. 10-ms Average Lateral Deceleration (EDR-3), Test No. MGSNB-1.....196
Figure E-13. Lateral Occupant Impact Velocity (EDR-3), Test No. MGSNB-1 197
Figure E-14. Lateral Occupant Displacement (EDR-3), Test No. MGSNB-1 198
Figure E-15. Acceleration Severity Index (EDR-3), Test No. MGSNB-1 199
Figure F-1. 10-ms Average Longitudinal Deceleration (DTS), Test No. MGSNB-2 201
Figure F-2. Longitudinal Occupant Impact Velocity (DTS), Test No. MGSNB-2 202
Figure F-3. Longitudinal Occupant Displacement (DTS), Test No. MGSNB-2 203
Figure F-4. 10-ms Average Lateral Deceleration (DTS), Test No. MGSNB-2.....204
Figure F-5. Lateral Occupant Impact Velocity (DTS), Test No. MGSNB-2 205
Figure F-6. Lateral Occupant Displacement (DTS), Test No. MGSNB-2 206
Figure F-7. Vehicle Angular Displacements (DTS), Test No. MGSNB-2.....207
Figure F-8. Acceleration Severity Index (DTS), Test No. MGSNB-2 208
Figure F-9. 10-ms Average Longitudinal Deceleration (EDR-4), Test No. MGSNB-2.....209
Figure F-10. Longitudinal Occupant Impact Velocity (EDR-4), Test No. MGSNB-2 210
Figure F-11. Longitudinal Occupant Displacement (EDR-4), Test No. MGSNB-2 211
Figure F-12. 10-ms Average Lateral Deceleration (EDR-4), Test No. MGSNB-2.....212
Figure F-13. Lateral Occupant Impact Velocity (EDR-4), Test No. MGSNB-2.....213
Figure F-14. Lateral Occupant Displacement (EDR-4), Test No. MGSNB-2.....214
Figure F-15. Vehicle Angular Displacements (EDR-4), Test No. MGSNB-2 215
Figure F-16. Acceleration Severity Index (EDR-4), Test No. MGSNB-2 216
Figure F-17. 10-ms Average Longitudinal Deceleration (EDR-3), Test No. MGSNB-2.....217
Figure F-18. Longitudinal Occupant Impact Velocity (EDR-3), Test No. MGSNB-2 218
Figure F-19. Longitudinal Occupant Displacement (EDR-3), Test No. MGSNB-2 219
Figure F-20. 10-ms Average Lateral Deceleration (EDR-3), Test No. MGSNB-2.....220
Figure F-21. Lateral Occupant Impact Velocity (EDR-3), Test No. MGSNB-2.....221
Figure F-22. Lateral Occupant Displacement (EDR-3), Test No. MGSNB-2.....222
Figure F-23. Acceleration Severity Index (EDR-3), Test No. MGSNB-2 223
Figure G-1. Summary of Test Results and Sequential Photographs, Test No. 220570-4 (T-31), NCHRP 350 Test 3-10 [8].....225
Figure G-2. Summary of Test Results and Sequential Photographs, Test No. GMS-2, NCHRP 350 Test 3-10 [9] 226
Figure G-3. Summary of Test Results and Sequential Photographs, Test No. MGSNB-2, MASH Test 3-10.....227
Figure G-4. Summary of Test Results and Sequential Photographs, Test No. NPG-1, NCHRP 350 Test 3-10 [3] 228
Figure G-5. Summary of Test Results and Sequential Photographs, Test No. 2214MG-3, MASH Test 3-10 [3] 229
Figure G-6. Summary of Test Results and Sequential Photographs, Test No. 420020-5, MASH Test 3-10 [15] 230
Figure G-7. Summary of Test Results and Sequential Photographs, Test No. 220570-2 (T-31), MASH Test 3-11 [8].....231

Figure G-8. Summary of Test Results and Sequential Photographs, Test No. GMS-1, MASH Test 3-11 [9] 232
Figure G-9. Summary of Test Results and Sequential Photographs, Test No. MGSNB-1, MASH Test 3-10 233
Figure G-10. Summary of Test Results and Sequential Photographs, Test No. NPG-4, NCHRP 350 Test 3-11 [1] 234
Figure G-11. Summary of Test Results and Sequential Photographs, Test No. 2214MG-2, MASH Test 3-11 [2] 235

LIST OF TABLES

Table 1. MASH TL-3 Crash Test Conditions 28
Table 2. MASH Evaluation Criteria for Longitudinal Barrier 30
Table 3. Weather Conditions, Test No. MGSNB-1 44
Table 4. Sequential Description of Impact Events, Test No. MGSNB-1 45
Table 5. Maximum Occupant Compartment Deformations by Location 48
Table 6. Summary of OIV, ORA, THIV, PHD, and ASI Values, Test No. MGSNB-1 49
Table 7. Weather Conditions, Test No. MGSNB-2 65
Table 8. Sequential Description of Impact Events, Test No. MGSNB-2 66
Table 9. Maximum Occupant Compartment Deformations by Location 69
Table 10. Summary of OIV, ORA, THIV, PHD, and ASI Values, Test No. MGSNB-2 71
Table 11. Test Comparisons 88
Table 12. Summary of Safety Performance Evaluation Results 101
Table 13. 31-in. (787-mm) Tall Guardrail Systems Test Designation No. 3-10 Result Comparison 102
Table 14. 31-in. (787-mm) Tall Guardrail Systems Test Designation No. 3-11 Result Comparison 103

1 INTRODUCTION

1.1 Problem Statement

The Midwest Guardrail System (MGS) is a non-proprietary, strong-post, W-beam guardrail system consisting of standard steel or wood guardrail posts, 12-gauge (2.66-mm) W-beam rail, and a 12-in. (305-mm) deep blockout [1-3]. The MGS has been successfully full-scale crash tested according to the Test Level 3 (TL-3) safety performance evaluation criteria of the National Cooperative Highway Research Program (NCHRP) Report No. 350 [4] and the *Manual for Assessing Safety Hardware* (MASH) [5]. Subsequently, the Federal Highway Administration (FHWA) has deemed the MGS eligible for reimbursement under the Federal-Aid Highway Program [6-7]. Unfortunately, the roadway space required to install a blocked guardrail system is not always available. Three propriety, strong-post, non-blocked W-beam guardrail systems have been recently developed and successfully crash tested. One was developed by Trinity Industries and was called the T-31 Guardrail [8]. The second was developed by Gregory Industries and was called the Gregory Mini Spacer (GMS) Guardrail [9]. The third was developed by Nucor Steel Marion Inc. and was called Nucor Strong Post W-Beam Guardrail System [10]. Since a non-proprietary, non-blocked alternative did not exist, states utilized one of the proprietary systems in areas where space was limited.

The proprietary, non-blocked W-beam guardrail systems use unique components, such as post-rail attachment hardware or variations to the standard guardrail post [8-10]. State Departments of Transportation (DOT) would be required to maintain an inventory of specialized components for replacement. Thus, these proprietary components would create maintenance problems, especially if multiple proprietary systems were permitted to be used in a given jurisdiction. Improper repairs could create tort liability issues if a serious accident occurred in an area where proprietary components were omitted during repair. A non-proprietary alternative to

the existing non-blocked W-beam guardrail systems could eliminate and/or reduce these concerns. Based on the historical performance of the standard MGS and the proprietary systems outlined in the preceding section, the MGS should function satisfactorily without a blockout.

1.2 Objective

The objective of this research was to evaluate the performance of a non-blocked version of the MGS. The barrier system was to be evaluated according to the TL-3 full-scale safety performance criteria set forth in MASH.

1.3 Scope

The research objective was achieved through the completion of several tasks. First, two full-scale vehicle crash tests were performed on the non-blocked MGS. The crash tests utilized a pickup truck and a small car, weighing approximately 5,000 lb (2,268 kg) and 2,425 lb (1,100 kg), respectively. The target impact conditions for both tests were an impact speed of 62 mph (100 km/h) and an impact angle of 25 degrees. Next, the test results were analyzed, evaluated, and documented. Finally, conclusions and recommendations were made that pertain to the safety performance of the non-blocked MGS.

2 DESIGN DETAILS

The test installation consisted of 181 ft-3 in (55.25 m) of standard 12-gauge (2.66-mm thick) W-beam supported by steel posts, as shown in Figure 1. Anchorage systems similar to those used on tangent guardrail terminals were utilized on both the upstream and downstream ends of the guardrail system. Design details are shown in Figures 1 through 10. Photographs of the test installations are shown in Figures 11 and 12 . Material specifications, mill certifications, and certificates of conformity for the system materials are shown in Appendix A.

The system was constructed with twenty-nine guardrail posts spaced 75 in. (1,905 mm) on center, as shown in Figures 1 and 2. Post nos. 3 through 27 were galvanized ASTM A992 steel W6x8.5 (W152x12.6) sections measuring 6 ft (1.8 m) long with a soil embedment depth of 40 in. (1,016 mm). Post nos. 1, 2, 28, and 29 were breakaway cable terminal (BCT) timber posts measuring 5½ in. wide x 7½ in. deep x 46 in. long (140 mm x 191 mm x 1,168 mm) and were placed in 6-ft (1.8-m) long foundation tubes, as shown in Figure 6. The BCT timber posts and foundation tubes were part of anchor systems designed to replicate the capacity of a tangent guardrail terminal. All posts were placed in a compacted coarse, crushed limestone material as recommended in MASH. For post nos. 3 through 27, 12-in. (305-mm) long, 12-gauge (2.66-mm thick) back up plates were used to block the rail away from the front face of the steel posts, as shown in Figure 3.

Standard 12-gauge (2.66-mm thick) W-beam rails with additional post bolt slots at half post spacing intervals were placed between post nos. 1 and 29, as shown in Figures 1, 2, and 9. Standard slice bolts, 5/8 x 1 ½ in. (M16x38) long guardrail bolt and nuts, were used to attach the rail to the posts. The top mounting height of the W-beam was 31 in. (787 m) above the ground with a $24^{7}/_{8}$ in. (632-mm) center mounting height. Rail splices were placed at the midspan locations between guardrail posts as shown in Figures 1and 2. All lap splice connections between

the rail sections were configured with the upstream segment in front to reduce vehicle snag at the splice during the crash test.

The installation for test no. MGSNB-2 was only raised 1 in. (25 mm) such that the height to the top of the guardrail was 32 in. (813 mm) as shown in Figures 13 through 22. Photographs of the test installations for test no. MGSNB-2 are shown in Figure 23.

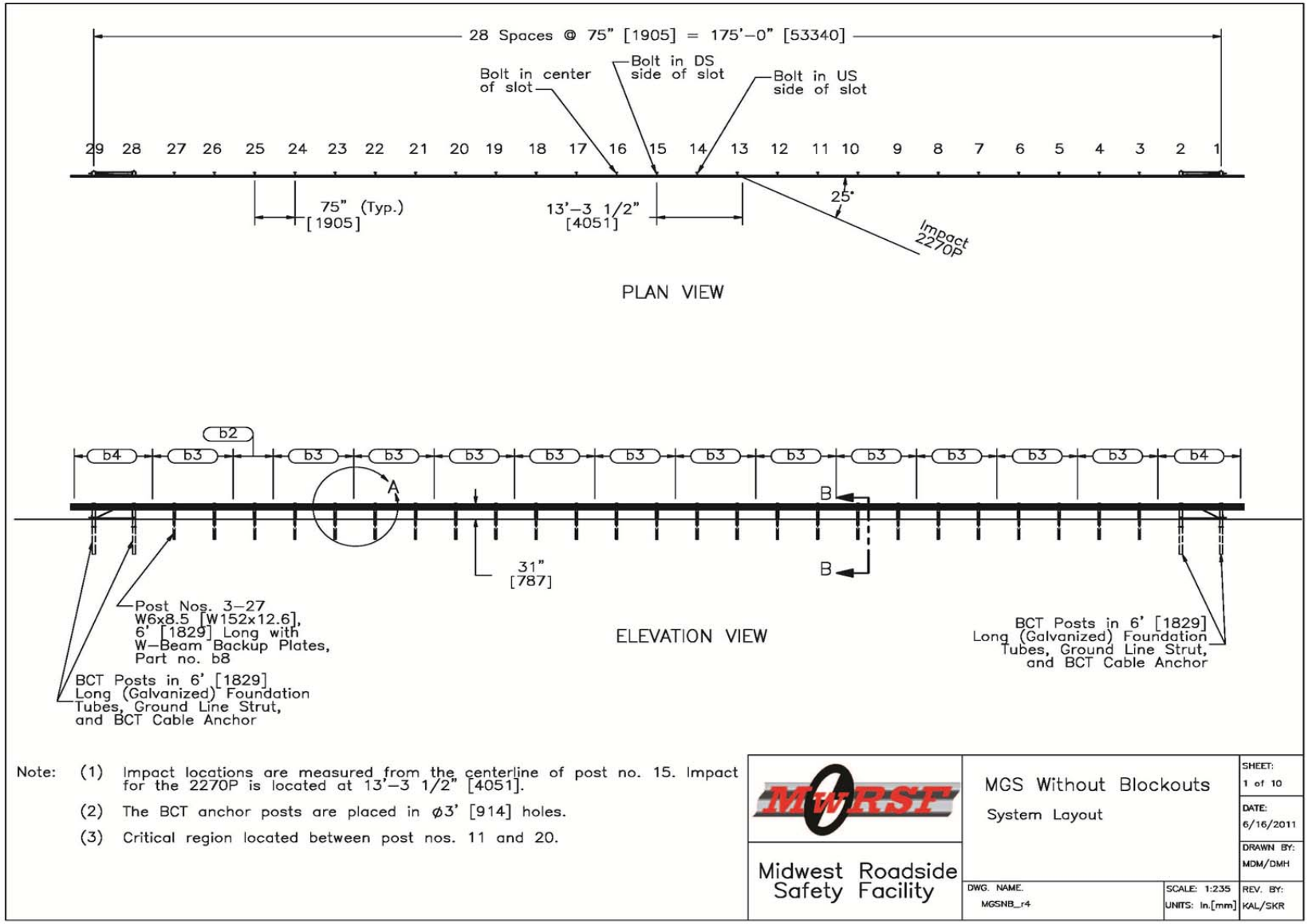

Figure 1. Test Installation Layout, Test No. MGSNB-1

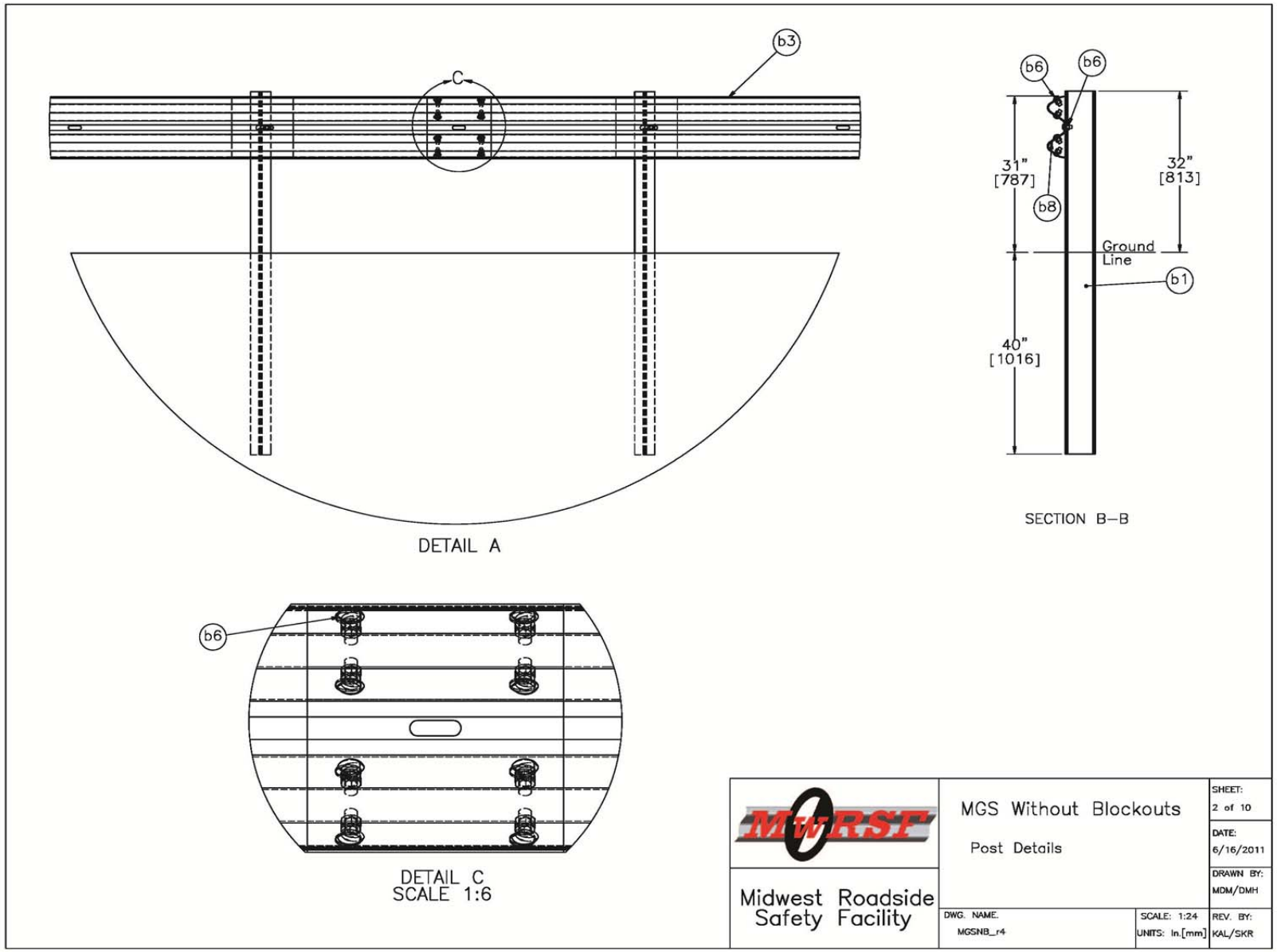

Figure 2. Post and Splice Details, Test No. MGSNB-1

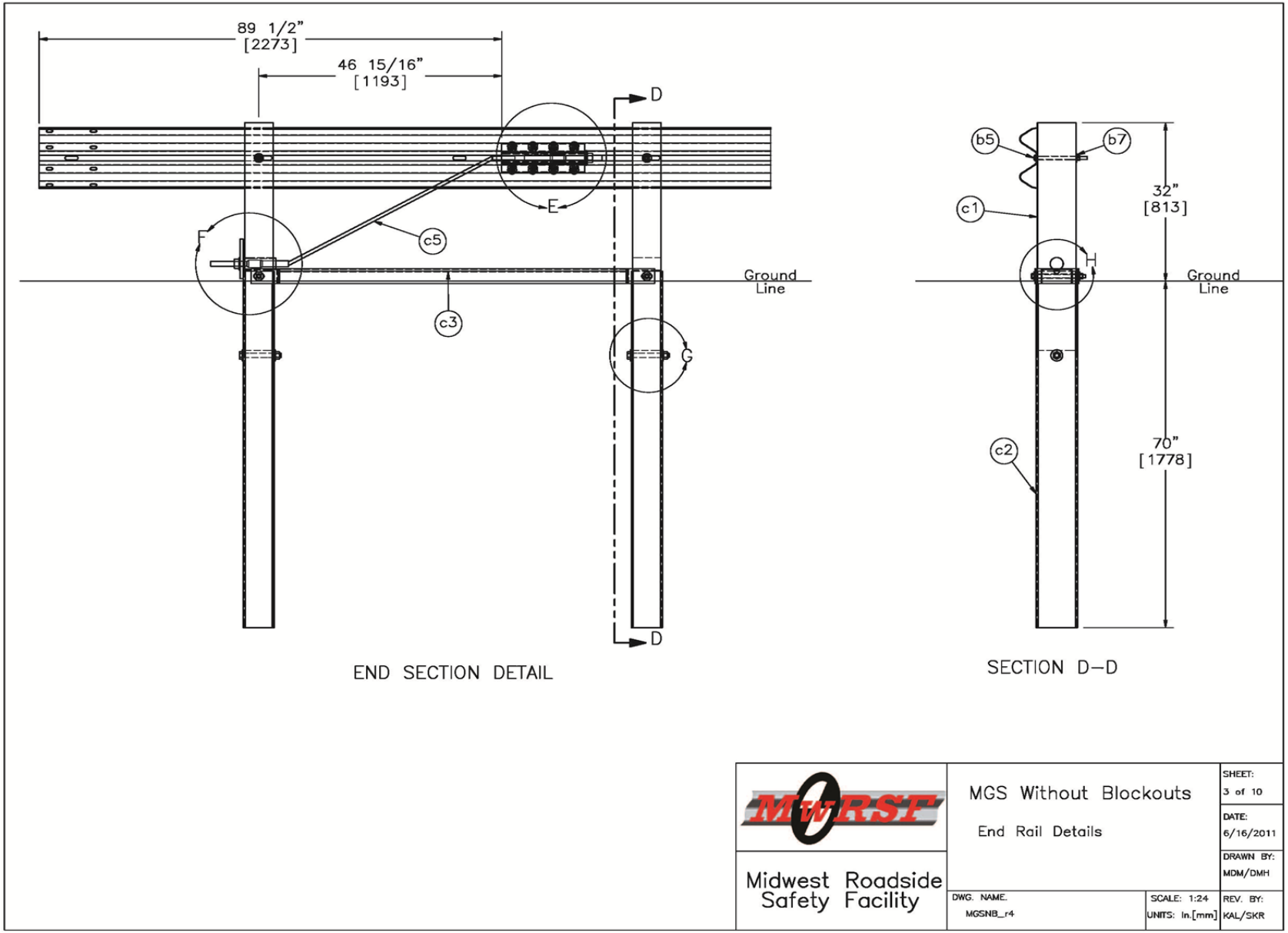

Figure 3. End Rail Details, Test No. MGSNB-1

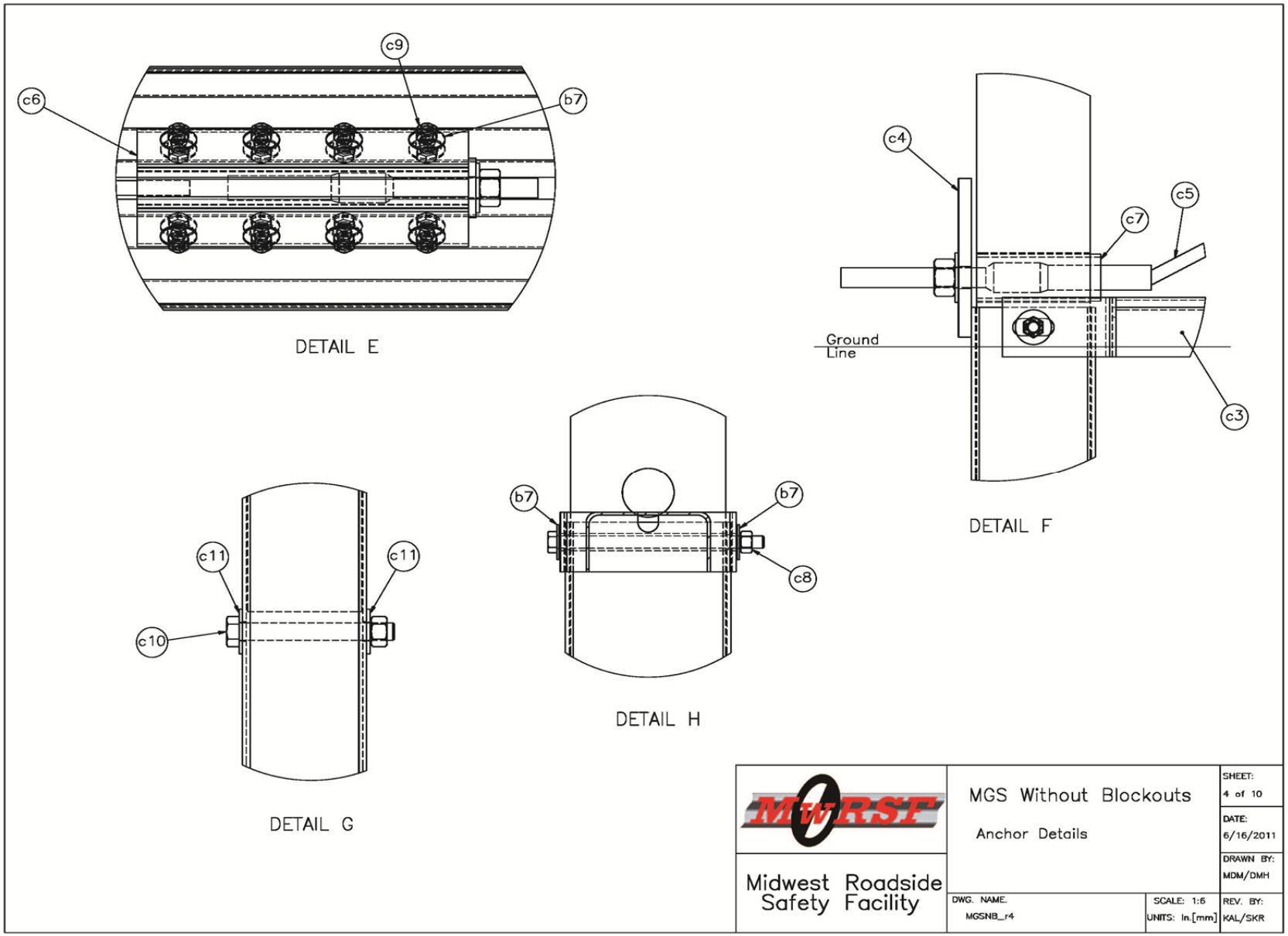

Figure 4. Anchorage Component Details, Test No. MGSNB-1

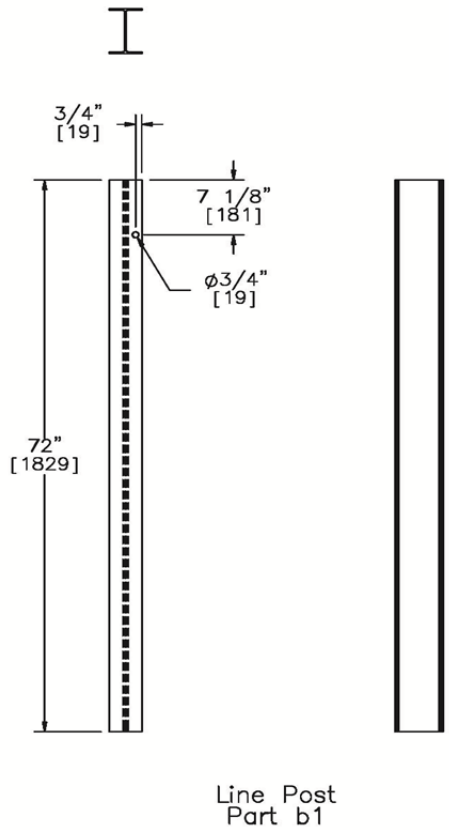

MwRSF
Midwest Roadside Safety Facility

MGS Without Blockouts
Post Nos. 3–27 Details

SHEET: 5 of 10
DATE: 6/16/2011
DRAWN BY: MDM/DMH
DWG. NAME. MGSNB_r4
SCALE: 1:20
UNITS: In.[mm]
REV. BY: KAL/SKR

Figure 5. Line Posts, Test No. MGSNB-1

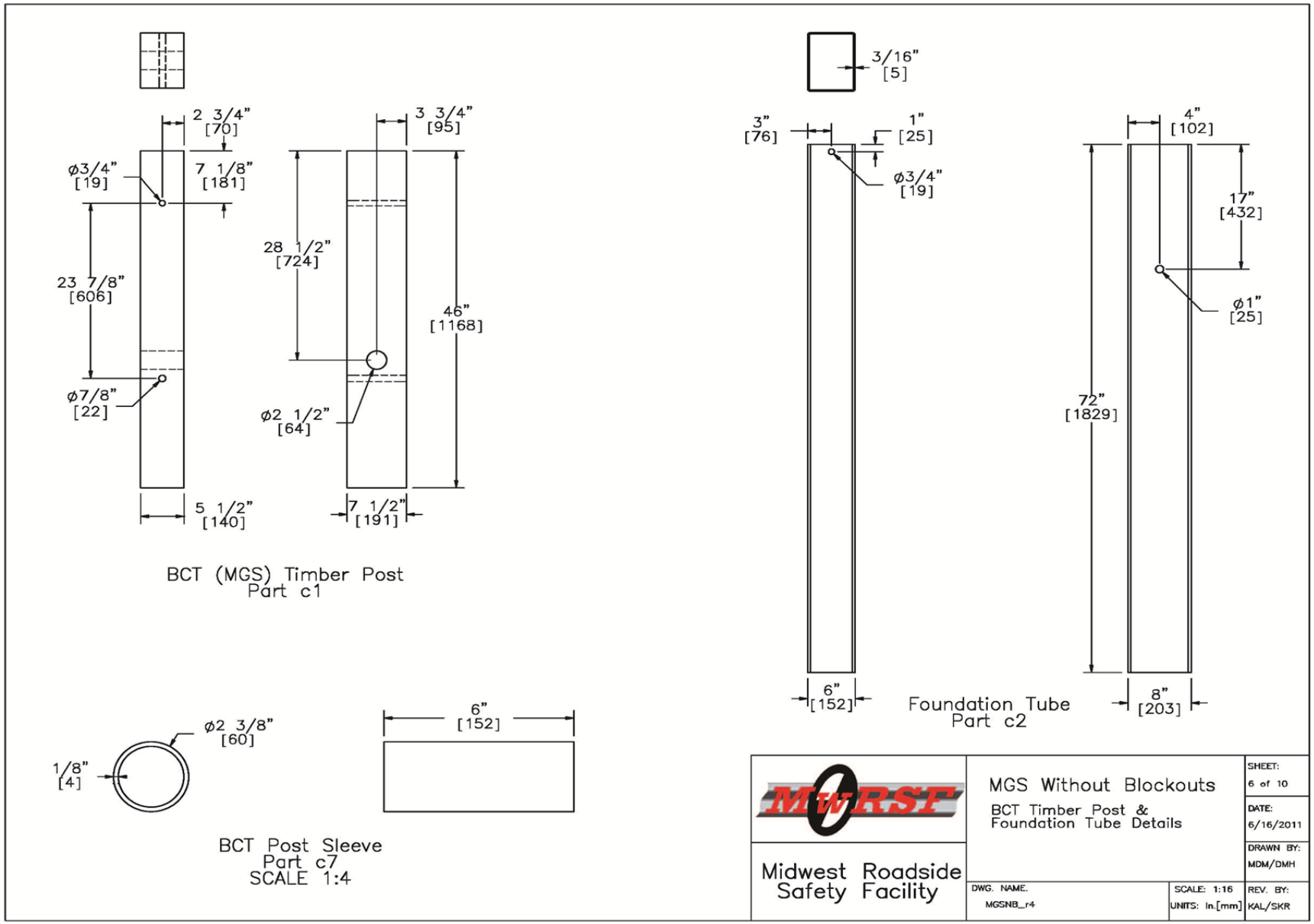

Figure 6. BCT Timber Post and Foundation Tube Details, Test No. MGSNB-1

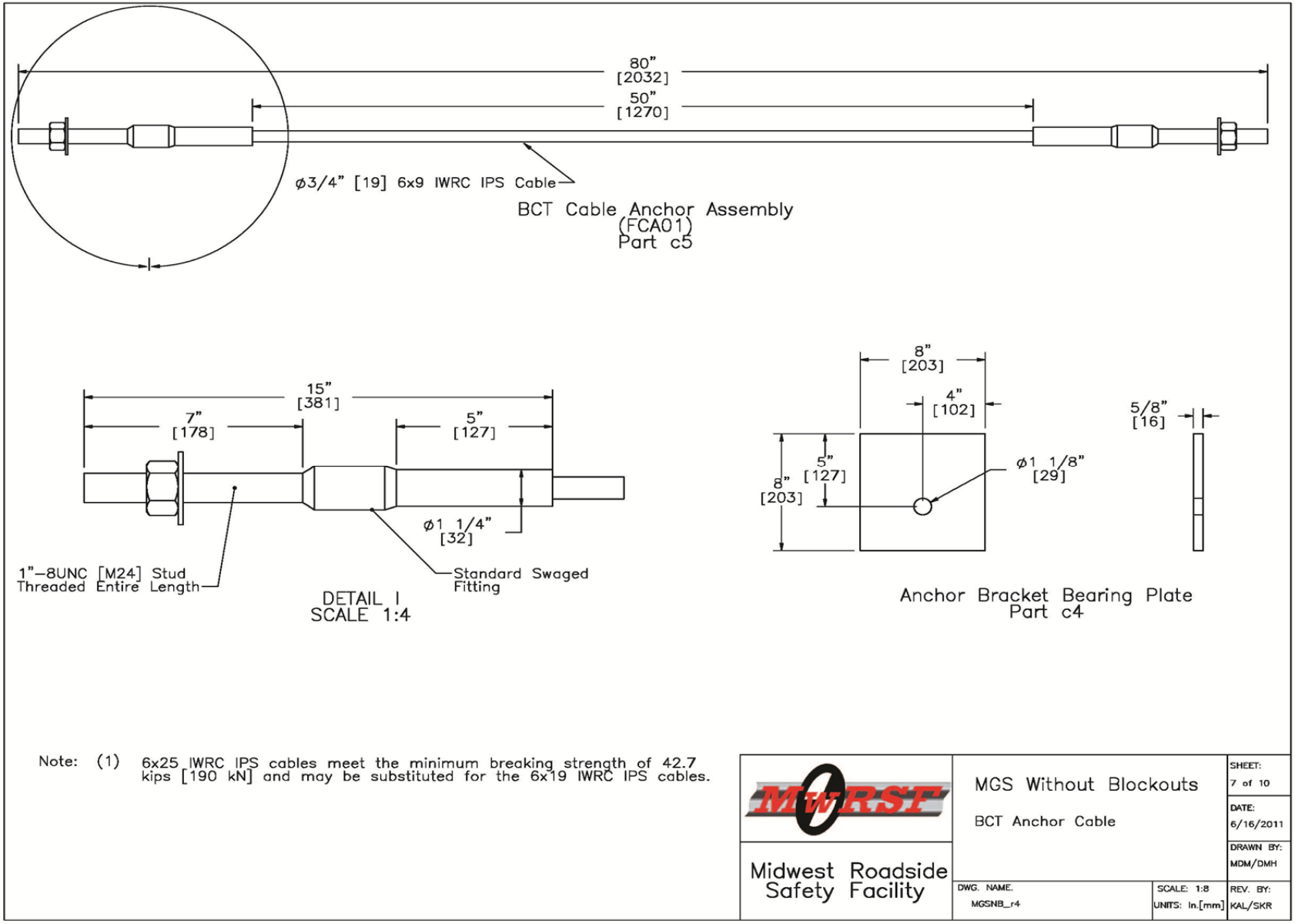

Figure 7. BCT Anchor Cable Details, Test No. MGSNB-1

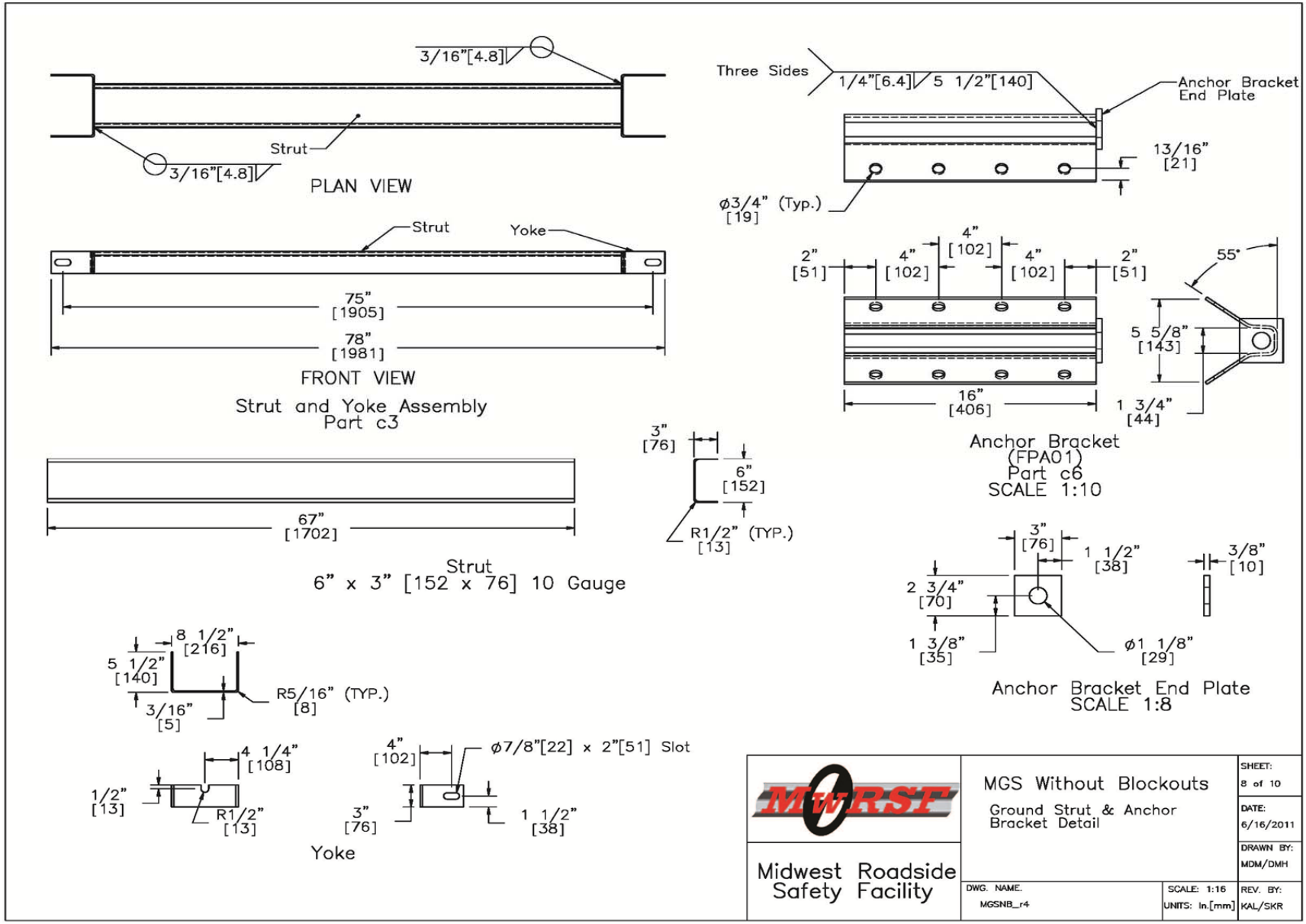

Figure 8. Ground Strut and Anchor Bracket Details, Test No. MGSNB-1

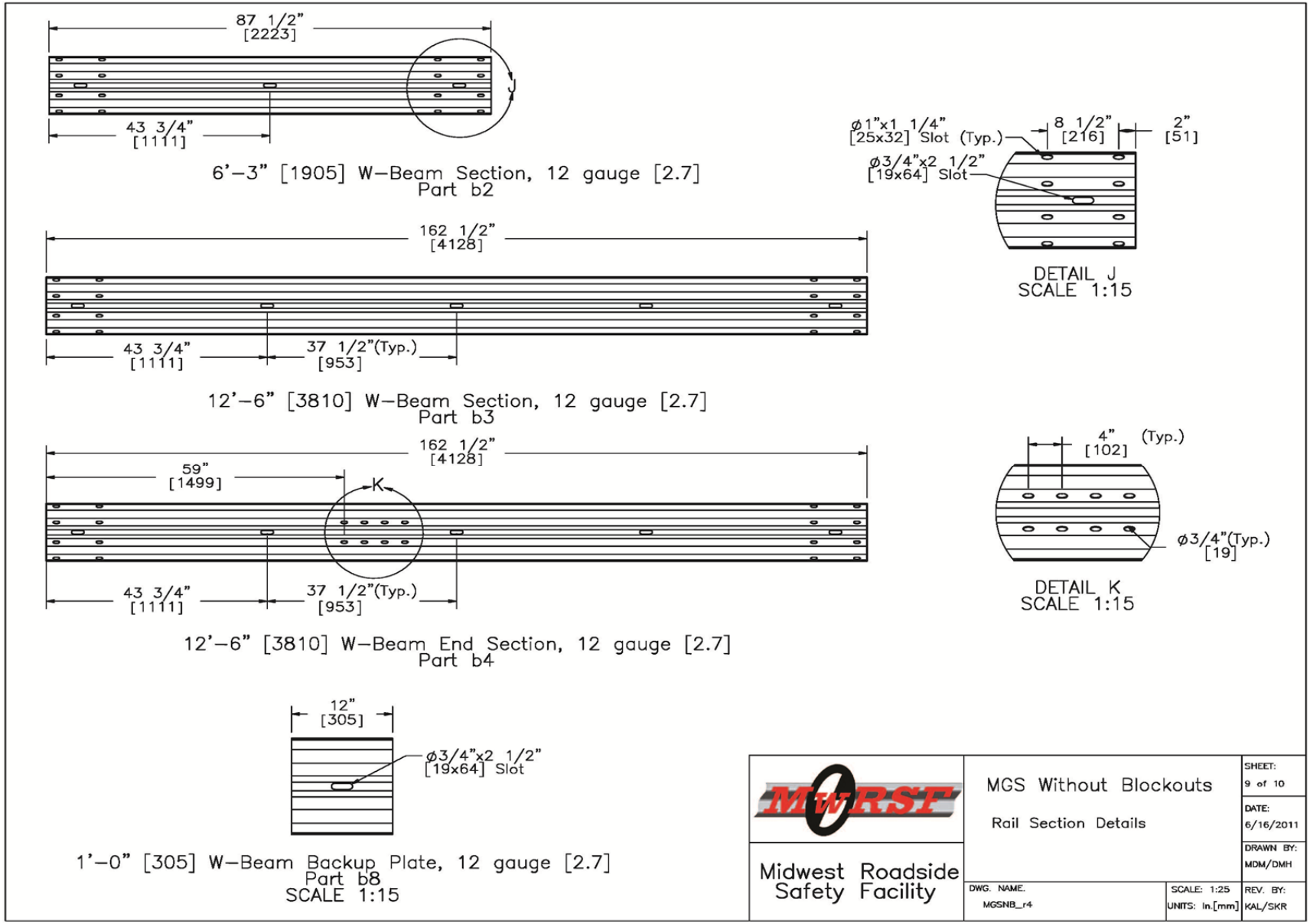

Figure 9. Rail Section Details, Test No. MGSNB-1

Item No.	QTY.	Description	Material Specifications and/or Grade	Hardware Guide
b1	25	W6x8.5 6' [W152x12.6 1829] Long Steel Post	ASTM A992 [345 MPa] (W6x9 A36 [248 Mpa])	–
b2	1	6'–3" W–Beam MGS Section	12 gauge [2.7] AASHTO M180	RWM01a
b3	12	12'–6" W–Beam MGS Section	12 gauge [2.7] AASHTO M180	RWM04a
b4	2	12'–6" W–Beam MGS End Section	12 gauge [2.7] AASHTO M180	RWM04a
b5	4	5/8" Dia. x 10" [M16x254] long Guardrail Bolt and Nut	ASTM A307	FBB03
b6	137	5/8" Dia. x 1 1/2" [M16x38] Long Guardrail Bolt and Nut	ASTM A307	FBB01
b7	44	5/8" [16] Dia. Flat Washer	ASTM A153	FWC16a
b8	25	W–Beam Backup Plate	12 ga. [2.7] AASHTO M180	RWB01a
c1	4	BCT Timber Post – MGS Height	SYP Grade No. 1 or better	PDF01
c2	4	72" [1829] Long Foundation Tube	ASTM A53 Grade B	PTE06
c3	2	Strut and Yoke Assembly	ASTM A36 Steel Galvanized	–
c4	2	8x8x5/8" [127x203x16] Anchor Cable Bearing Plate	ASTM A36 Steel	FPB01
c5	2	BCT Anchor Cable Assembly	ø3/4" [19] 6x19 IWRC IPS Galvanized Wire Rope	FCA01–02
c6	2	Anchor Bracket Assembly	ASTM A36 Steel	FPA01
c7	2	2 3/8" [60] O.D. x 6" [152] Long BCT Post Sleeve	ASTM A53 Grade B Schedule 40	FMM02
c8	4	5/8" Dia. x 10" [M16x254] Long Hex Head Bolt and Nut	ASTM A307	FBX16a
c9	16	5/8" Dia. x 1 1/2" [M16x38] Long Hex Head Bolt and Nut	ASTM A307	FBX16a
c10	4	7/8" Dia. x 7 1/2" [M22x191] Long Hex Head Bolt and Nut	ASTM A307	FBX22a
c11	8	7/8" [22] Dia. Flat Washer	ASTM A153	FWC22a

MwRSF Midwest Roadside Safety Facility	MGS Without Blockouts Bill of Materials		SHEET: 10 of 10 DATE: 6/16/2011 DRAWN BY: MDM/DMH
	DWG. NAME. MGSNB_r4	SCALE: None UNITS: In.[mm]	REV. BY: KAL/SKR

Figure 10. Bill of Materials, Test No. MGSNB-1

Figure 11. Test Installation Photographs, Test No. MGSNB-1

Figure 12. Test Installation Photographs, Test No. MGSNB-1

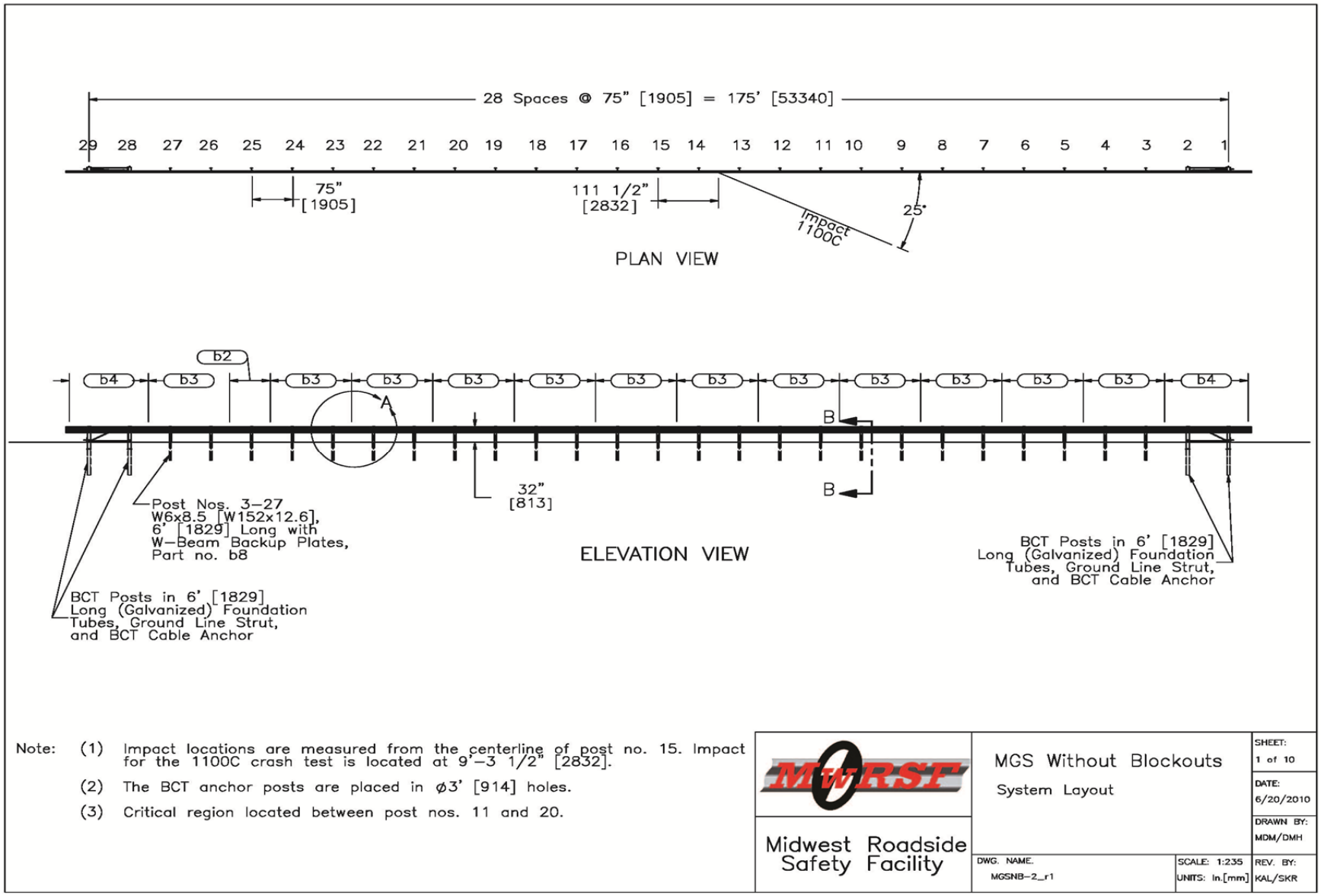

Figure 13. System Layout, Test No. MGSNB-2

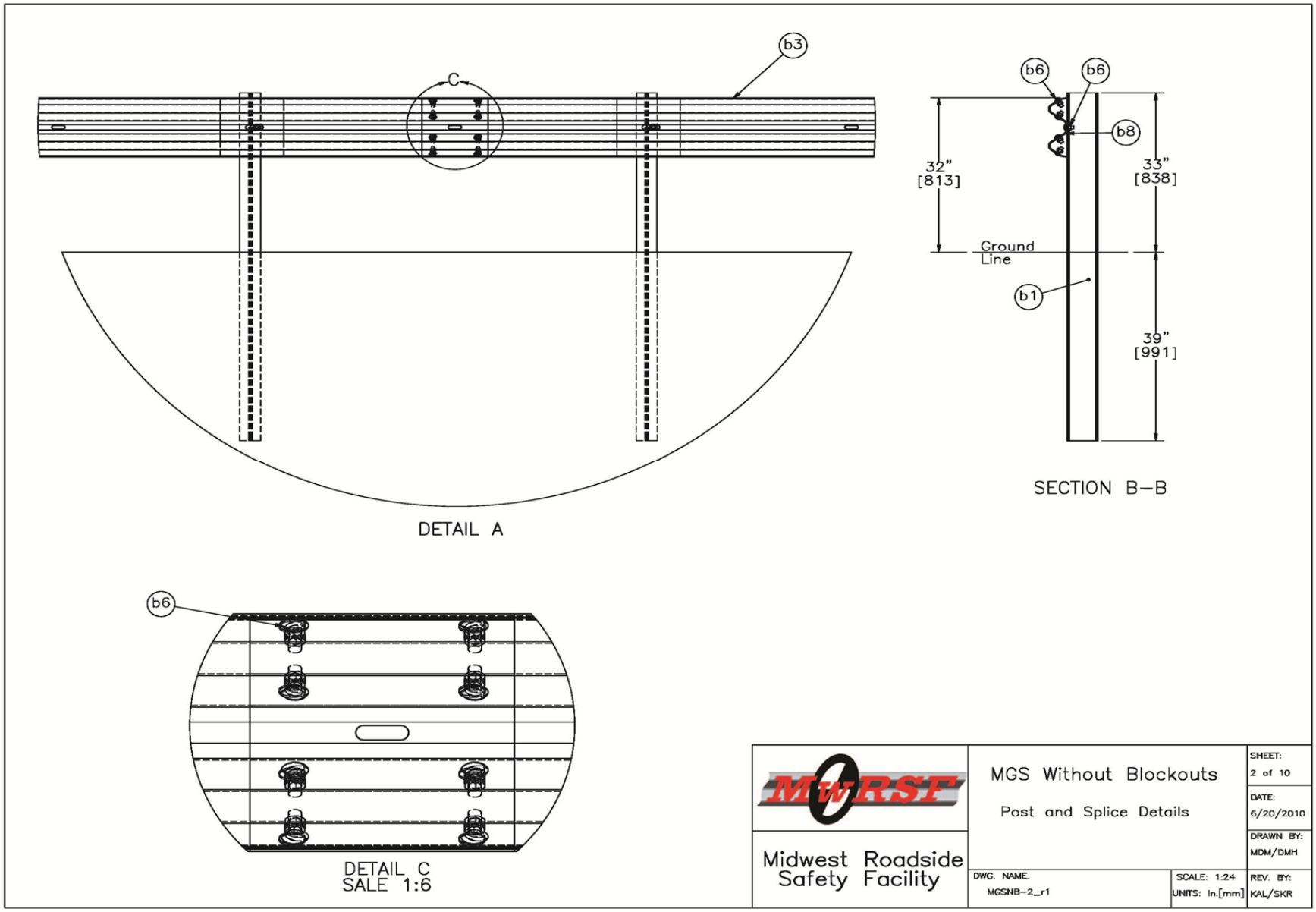

Figure 14. Post and Splice Details, Test No. MGSNB-2

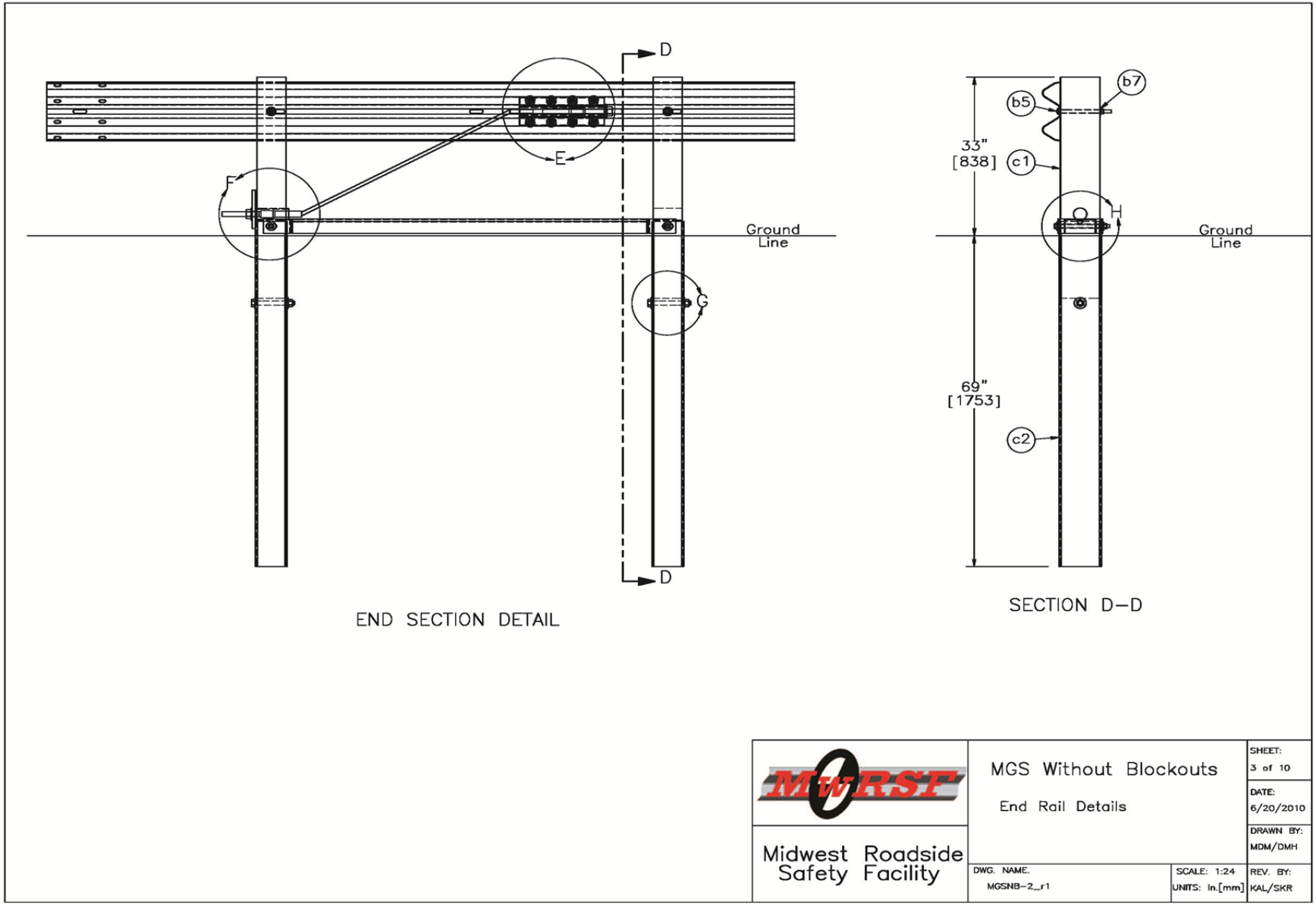

Figure 15. Anchorage Layout, Test No. MGSNB-2

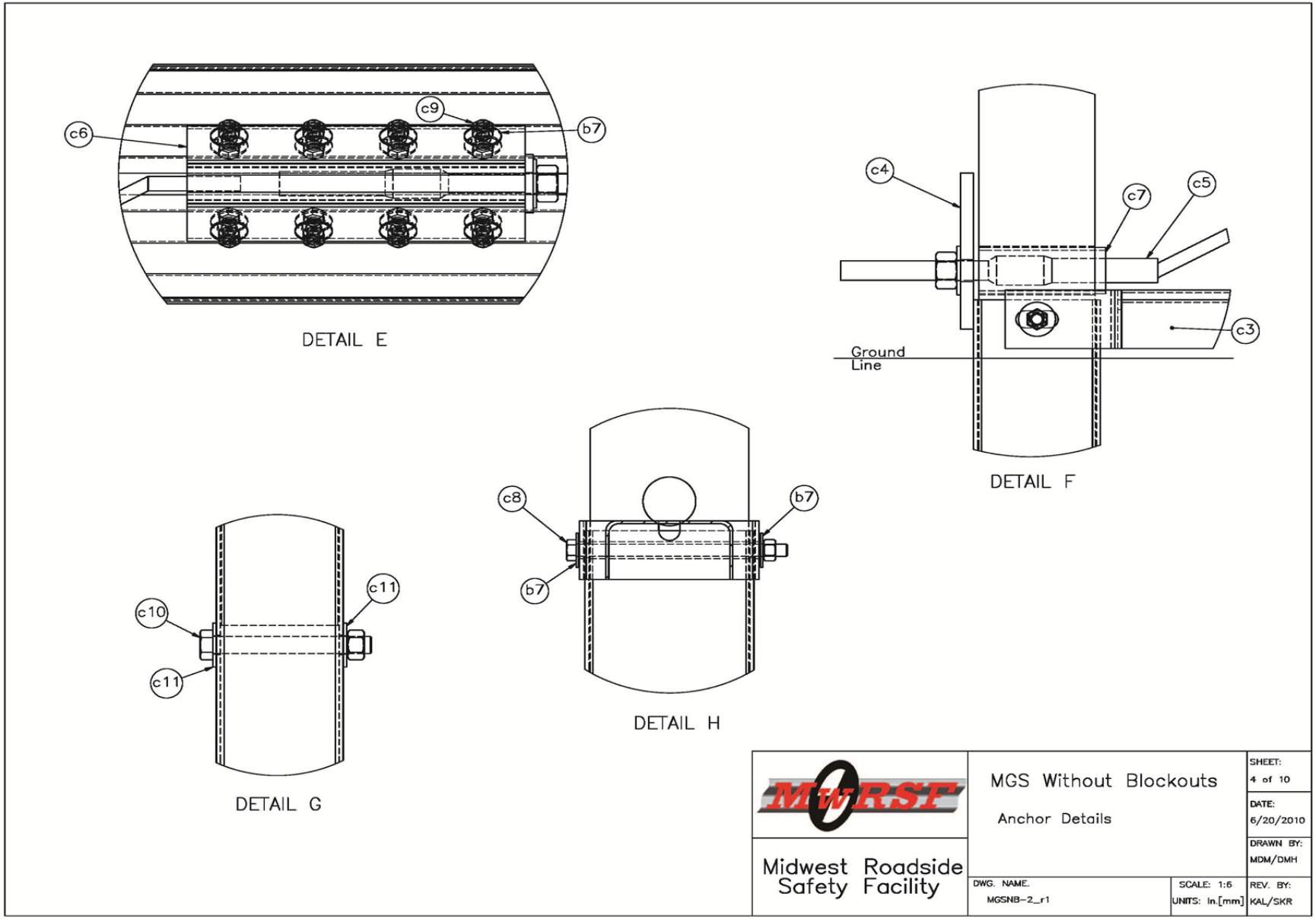

Figure 16. Anchorage Component Details, Test No. MGSNB-2

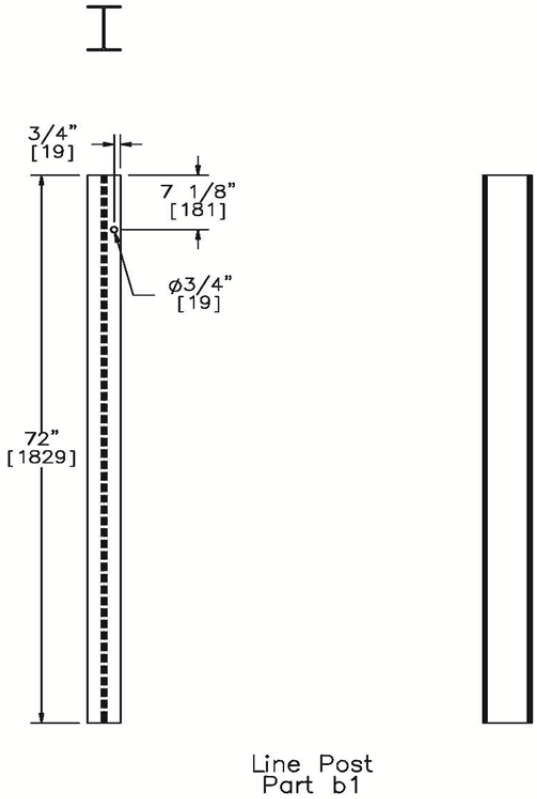

MwRSF
Midwest Roadside Safety Facility

MGS Without Blockouts
Post Nos. 3–27 Details

SHEET: 5 of 10
DATE: 6/20/2010
DRAWN BY: MDM/DMH
DWG. NAME. MGSNB–2_r1
SCALE: 1:20
UNITS: In.[mm]
REV. BY: KAL/SKR

Figure 17. Posts 3 through 27, Test No. MGSNB-2

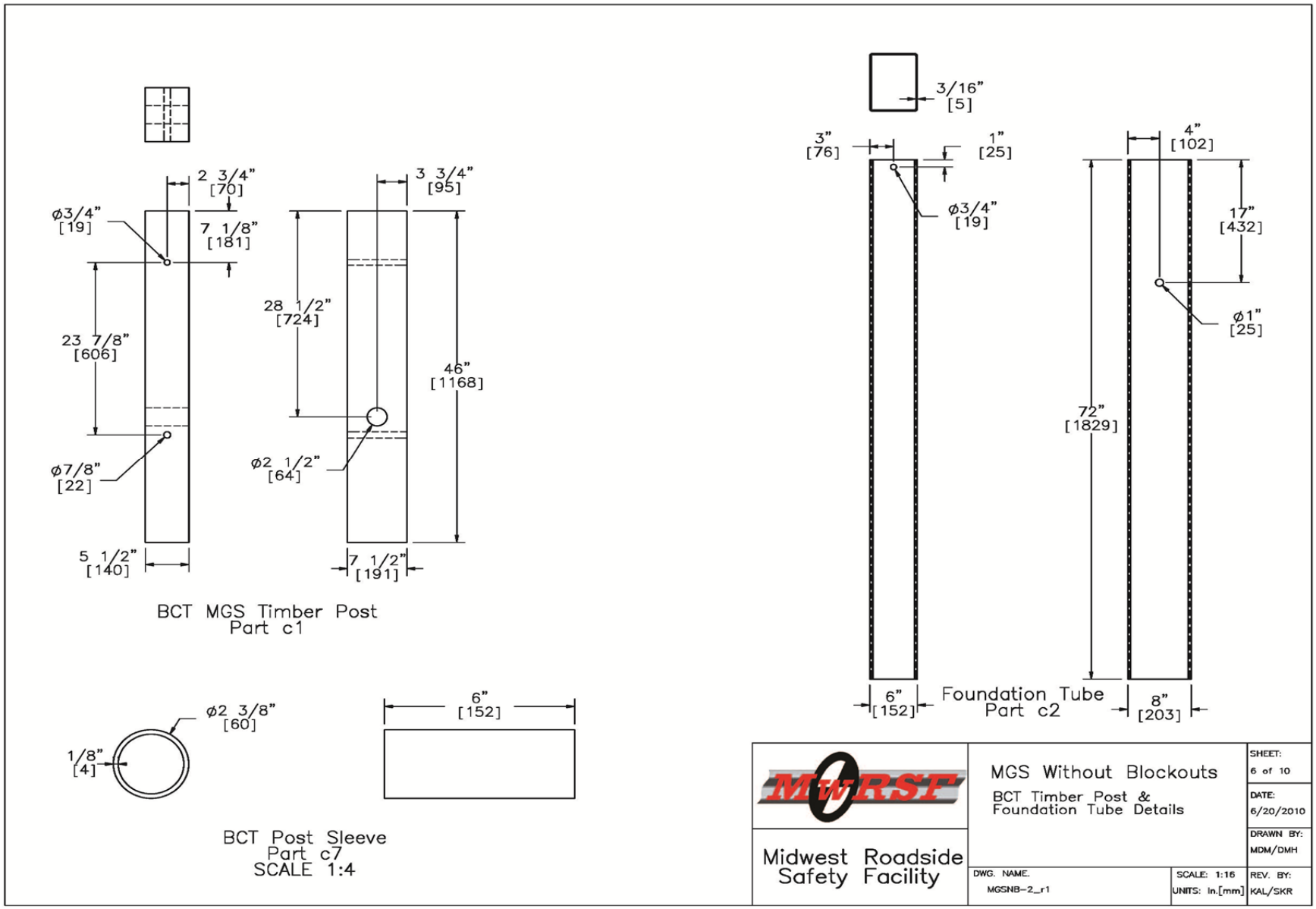

Figure 18. BCT Timber Post and Foundation Tube Details, Test No. MGSNB-2

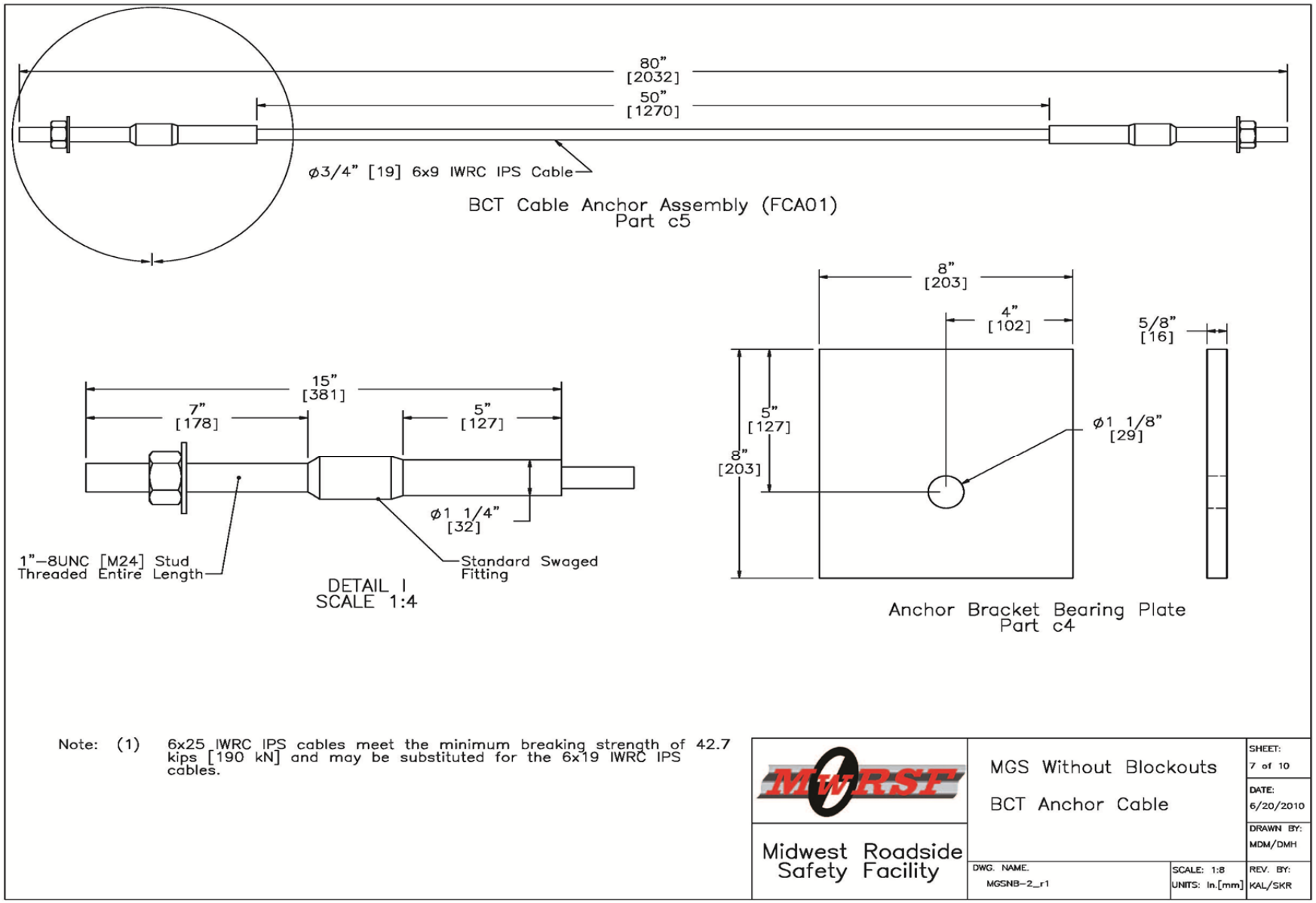

Figure 19. BCT Anchor Cable Details, Test No. MGSNB-2

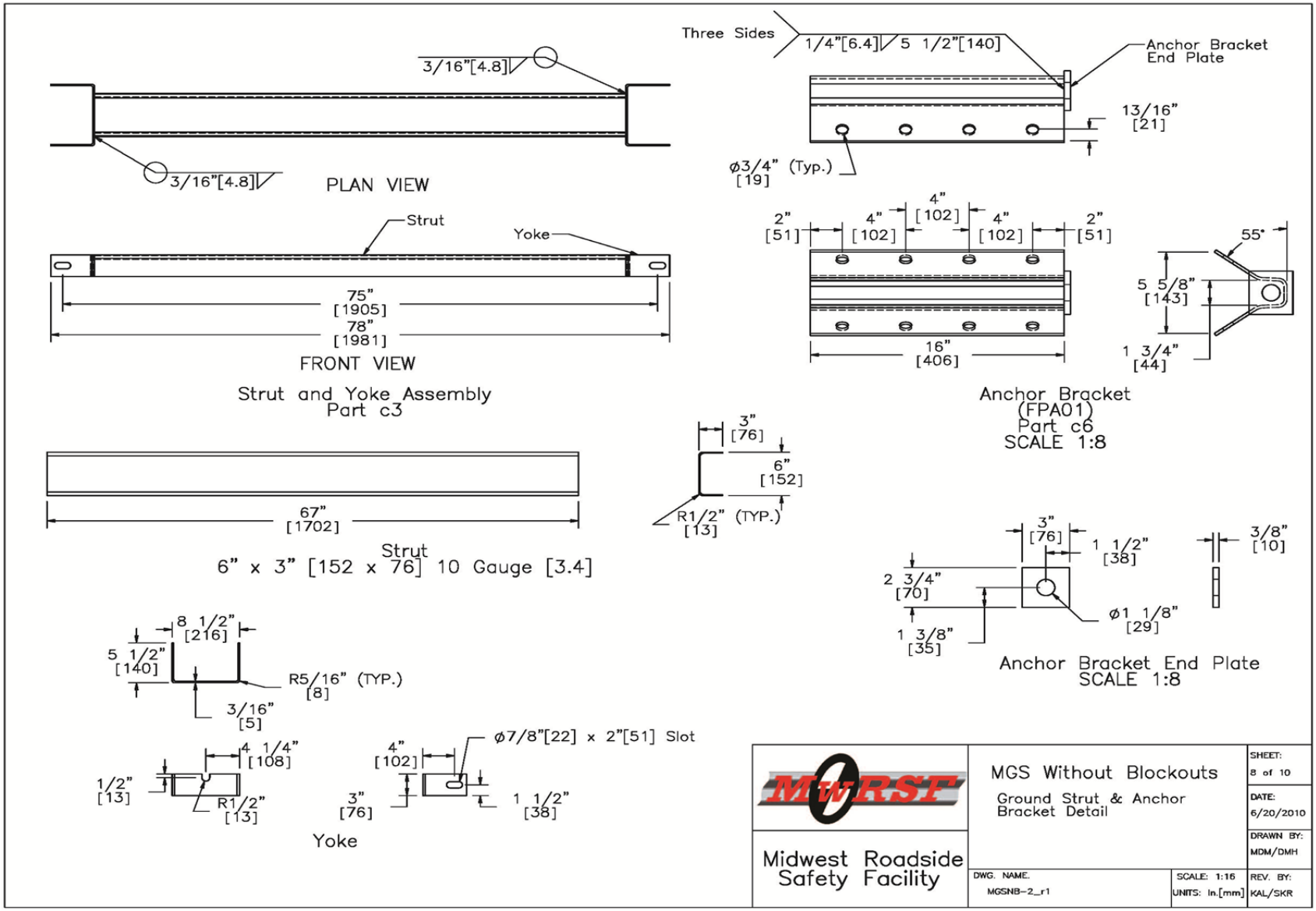

Figure 20. Ground Strut and Anchor Bracket Details, Test No. MGSNB-2

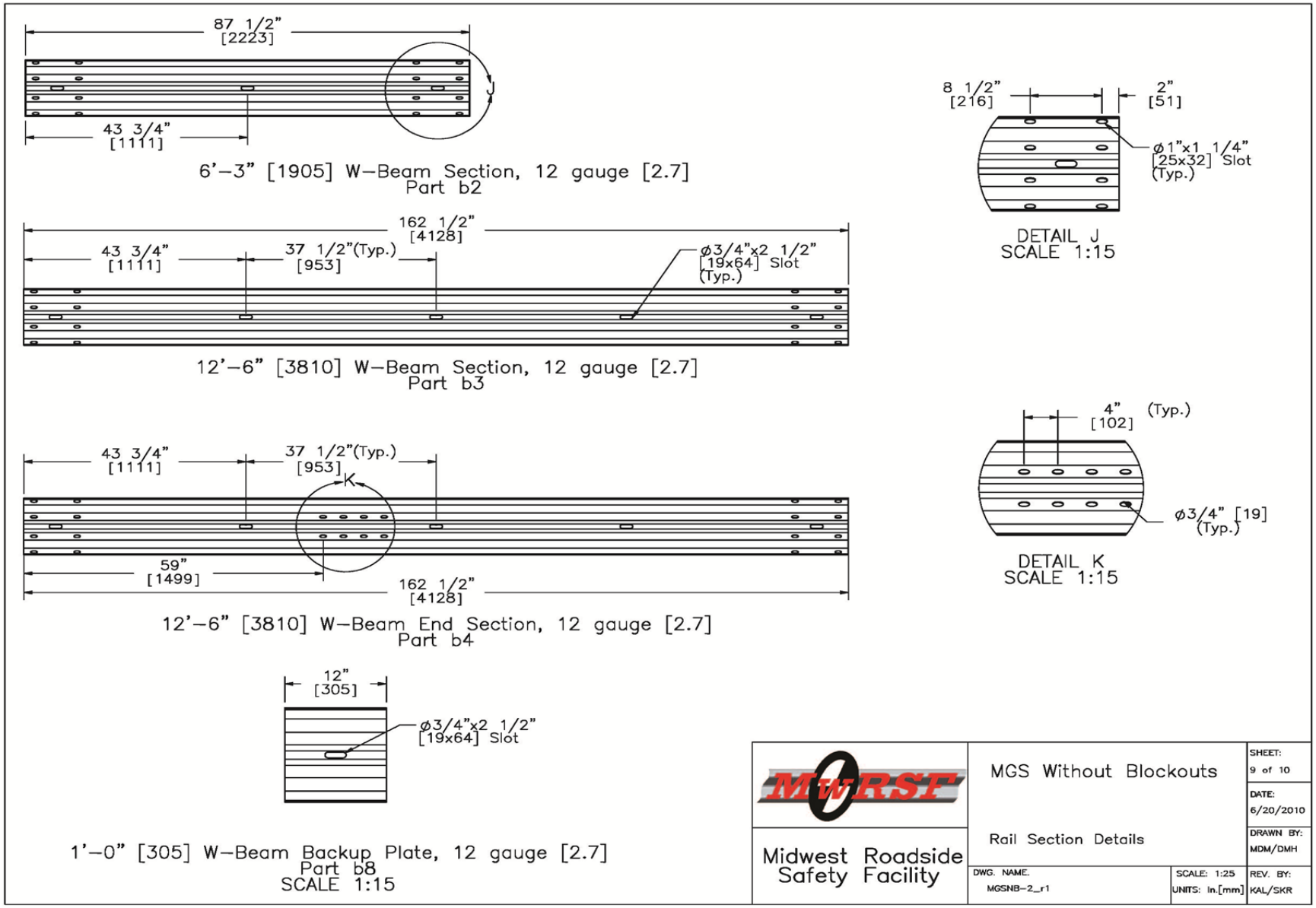

Figure 21. Rail Section Details, Test No. MGSNB-2

Item No.	QTY.	Description	Material Specifications and/or Grade	Hardware Guide
b1	25	W6x8.5 6' [W152x12.6 1829] Long Steel Post	ASTM A992 [345 MPa] (W6x9 A36 [248 Mpa])	–
b2	1	6'–3" W–Beam MGS Section	12 gauge [2.7] AASHTO M180	RWM01a
b3	12	12'–6" W–Beam MGS Section	12 gauge [2.7] AASHTO M180	RWM04a
b4	2	12'–6" W–Beam MGS End Section	12 gauge [2.7] AASHTO M180	RWM04a
b5	4	5/8" Dia. x 10" [M16x254] Long Guardrail Bolt and Nut	ASTM A307	FBB03
b6	137	5/8" Dia. x 1 1/2" [M16x38] Long Guardrail Bolt and Nut	ASTM A307	FBB01
b7	44	5/8" [16] Dia. Flat Washer	ASTM A153	FWC16a
b8	25	W–Beam Backup Plate	12 ga. [2.7] AASHTO M180	RWB01a
c1	4	BCT Timber Post – MGS Height	SYP Grade No. 1 or better	PDF01
c2	4	72" [1829] Long Foundation Tube	ASTM A53 Grade B	PTE06
c3	2	Strut and Yoke Assembly	ASTM A36 Steel Galvanized	–
c4	2	8x8x5/8" [127x203x16] Anchor Cable Bearing Plate	ASTM A36 Steel	FPB01
c5	2	BCT Anchor Cable Assembly	ø3/4" [19] 6x19 IWRC IPS Galvanized Wire Rope	FCA01–02
c6	2	Anchor Bracket Assembly	ASTM A36 Steel	FPA01
c7	2	2 3/8" [60] O.D. x 6" [152] Long BCT Post Sleeve	ASTM A53 Grade B Schedule 40	FMM02
c8	4	5/8" Dia. x 10" [M16x254] Long Hex Head Bolt and Nut	ASTM A307	FBX16a
c9	16	5/8" Dia. x 1 1/2" [M16x38] Long Hex Head Bolt and Nut	ASTM A307	FBX16a
c10	4	7/8" Dia. x 7 1/2" [M22x191] Long Hex Head Bolt and Nut	ASTM A307	FBX22a
c11	8	7/8" [22] Dia. Flat Washer	ASTM A153	FWC22a

MwRSF Midwest Roadside Safety Facility	MGS Without Blockouts Bill of Materials	SHEET: 10 of 10 DATE: 6/20/2010 DRAWN BY: MDM/DMH
	DWG. NAME. MGSNB–2_r1 SCALE: None UNITS: In.[mm]	REV. BY: KAL/SKR

Figure 22. Bill of Materials, Test No. MGSNB-2

Figure 23. Test Installation Photographs, Test No. MGSNB-2

3 TEST REQUIREMENTS AND EVALUATION CRITERIA

3.1 Test Requirements

Longitudinal barriers, such as W-beam guardrails, must satisfy impact safety standards in order to be accepted by the Federal Highway Administration (FHWA) for use on National Highway System (NHS) new construction projects or as a replacement for existing designs not meeting current safety standards. According to TL-3 of MASH, longitudinal barrier systems must be subjected to two full-scale vehicle crash tests. The two full-scale crash tests are noted below:

1. Test Designation No. 3-10 consists of a 2,425-lb (1,100-kg) passenger car impacting the system at a nominal speed and angle of 62 mph (100 km/h) and 25 degrees, respectively.

2. Test Designation No. 3-11 consists of a 5,000-lb (2,268-kg) pickup truck impacting the system at a nominal speed and angle of 62 mph (100 km/h) and 25 degrees, respectively.

The test conditions of TL-3 longitudinal barriers are summarized in Table 1.

Table 1. MASH TL-3 Crash Test Conditions

Test Article	Test Designation No.	Test Vehicle	Impact Conditions			Evaluation Criteria [1]
			Speed		Angle (deg)	
			mph	km/h		
Longitudinal Barrier	3-10	1100C	62	100	25	A,D,F,H,I
	3-11	2270P	62	100	25	A,D,F,H,I

[1] Evaluation criteria explained in Table 2.

3.2 Evaluation Criteria

Evaluation criteria for full-scale vehicle crash testing are based on three appraisal areas: (1) structural adequacy; (2) occupant risk; and (3) vehicle trajectory after collision. Criteria for structural adequacy are intended to evaluate the ability of the longitudinal barrier to contain and

redirect impacting vehicles. In addition, controlled lateral deflection of the test article is acceptable. Occupant risk evaluates the degree of hazard to occupants in the impacting vehicle. Vehicle trajectory after collision is a measure of the potential for the post-impact trajectory of the vehicle to result in a secondary collision with other vehicles and/or fixed objects, thereby increasing the risk of injury to the occupant of the impacting vehicle and/or other vehicles. These evaluation criteria are summarized in Table 2 and defined in greater detail in MASH. The full-scale vehicle crash tests were conducted and reported in accordance with the procedures provided in MASH.

In addition to the standard occupant risk measures, the Post-Impact Head Deceleration (PHD), the Theoretical Head Impact Velocity (THIV), and the Acceleration Severity Index (ASI) were determined and reported on the test summary sheet. Additional discussion on PHD, THIV and ASI is provided in MASH.

3.3 Soil Strength Requirements

In order to limit the variation of soil strength among testing agencies, foundation soil must satisfy the recommended performance characteristics set forth in Chapter 3 and Appendix B of MASH. Testing facilities must first subject the designated soil to a dynamic post test to demonstrate a minimum dynamic load of 7.5 kips (33.4 kN) at deflections between 5 and 20 in. (127 and 508 mm). If satisfactory results are observed, a static test is conducted using an identical test installation. The results from this static test become the baseline requirement for soil strength in future full-scale crash testing in which the designated soil is used. An additional post installed near the impact point is statically tested on the day of the full-scale crash test in the same manner as used for the baseline static test. The full-scale crash test can be conducted only if the static test results show a soil resistance equal to or greater than 90 percent of the baseline test

at deflections of 5, 10, and 15 in. (127, 254, and 381 mm). Otherwise, the crash test must be postponed until the soil demonstrates adequate post-soil strength.

Table 2. MASH Evaluation Criteria for Longitudinal Barrier

<table>
<tr><td>Structural Adequacy</td><td>A.</td><td colspan="3">Test article should contain and redirect the vehicle or bring the vehicle to a controlled stop; the vehicle should not penetrate, underride, or override the installation although controlled lateral deflection of the test article is acceptable.</td></tr>
<tr><td rowspan="6">Occupant Risk</td><td>D.</td><td colspan="3">Detached elements, fragments or other debris from the test article should not penetrate or show potential for penetrating the occupant compartment, or present an undue hazard to other traffic, pedestrians, or personnel in a work zone. Deformations of, or intrusions into, the occupant compartment should not exceed limits set forth in Section 5.3 and Appendix E of MASH.</td></tr>
<tr><td>F.</td><td colspan="3">The vehicle should remain upright during and after collision. The maximum roll and pitch angles are not to exceed 75 degrees.</td></tr>
<tr><td rowspan="4">H.</td><td colspan="3">Occupant Impact Velocity (OIV) (see Appendix A, Section A5.3 of MASH for calculation procedure) should satisfy the following limits:</td></tr>
<tr><td colspan="3">Occupant Impact Velocity Limits</td></tr>
<tr><td>Component</td><td>Preferred</td><td>Maximum</td></tr>
<tr><td>Longitudinal and Lateral</td><td>30 ft/s
(9.1 m/s)</td><td>40 ft/s
(12.2 m/s)</td></tr>
<tr><td rowspan="4">I.</td><td colspan="3">The Occupant Ridedown Acceleration (ORA) (see Appendix A, Section A5.3 of MASH for calculation procedure) should satisfy the following limits:</td></tr>
<tr><td colspan="3">Occupant Ridedown Acceleration Limits</td></tr>
<tr><td>Component</td><td>Preferred</td><td>Maximum</td></tr>
<tr><td>Longitudinal and Lateral</td><td>15.0 g’s</td><td>20.49 g’s</td></tr>
</table>

4 TEST CONDITIONS

4.1 Test Facility

The testing facility is located at the Lincoln Air Park on the northwest side of the Lincoln Municipal Airport and is approximately 5 miles (8.0 km) northwest of the University of Nebraska-Lincoln.

4.2 Vehicle Tow and Guidance System

A reverse cable tow system with a 1:2 mechanical advantage was used to propel the test vehicle. The distance traveled and the speed of the tow vehicle was one-half that of the test vehicle. The test vehicle was released from the tow cable before impact with the barrier system. A digital speedometer on the tow vehicle increased the accuracy of the test vehicle impact speed.

A vehicle guidance system developed by Hinch [11] was used to steer the test vehicle. A guide flag, attached to the left-front wheel and the guide cable, was sheared off before impact with the barrier system. The ⅜-in. (9.5-mm) diameter guide cable was tensioned to approximately 3,500 lb (15.6 kN) and supported both laterally and vertically every 100 ft (30.5 m) by hinged stanchions. The hinged stanchions stood upright while holding up the guide cable, but as the vehicle was towed down the line, the guide flag struck and knocked each stanchion to the ground.

4.3 Test Vehicles

For test no. MGSNB-1, a 2004 Dodge Ram Quad Cab 1500 was used as the test vehicle. The curb, test inertial, and gross static vehicle weights were 4,955 lb (2,248 kg), 5,011 lb (2,273 kg), and 5,181 lb (2,350 kg), respectively. The test vehicle is shown in Figure 24, and vehicle dimensions are shown in Figure 25.

For test no. MGSNB-2, a 2005 Kia Rio was used as the test vehicle. The curb, test inertial, and gross static vehicle weights were 2,375 lb (1,077 kg), 2,408 lb (1,092 kg), and 2,578

lb (1,169 kg), respectively. The test vehicle is shown in Figure 26, and vehicle dimensions are shown in Figure 27.

The longitudinal component of the center of gravity (c.g.) was determined using measured axle weights. The Suspension Method [12] was used to determine the vertical component of the c.g. for the pickup truck. This method is based on the principle that the c.g. of any freely suspended body is in the vertical plane through the point of suspension. The vehicle was suspended successively in three positions, and the respective planes containing the c.g. were established. The intersection of these planes pinpointed the final c.g. location for the test inertial condition. The location of the final centers of gravity are shown in Figures 24 through 29. Data used to calculate the location of the c.g. and ballast information are shown in Appendix B.

Square, black and white-checkered targets were placed on the vehicle to aid in the analysis of the high-speed videos, as shown in Figures 28 and 29. Round, checkered targets were placed on the center of gravity on the left-side door, the right-side door, and the roof of the vehicle. The remaining targets were located so that they could be viewed from the high-speed cameras and used as reference points for video analysis.

The front wheels of the test vehicle were aligned for camber, caster, and toe-in values of zero so that the vehicles would track properly along the guide cable. A 5B flash bulb was mounted under the right-side windshield wiper and was fired by a pressure tape switch mounted at the impact corner of the bumper. The flash bulb was fired upon initial impact with the test article to create a visual indicator of the precise time of impact on the high-speed videos. A remote controlled brake system was installed in the test vehicle so the vehicle could be brought safely to a stop after the test.

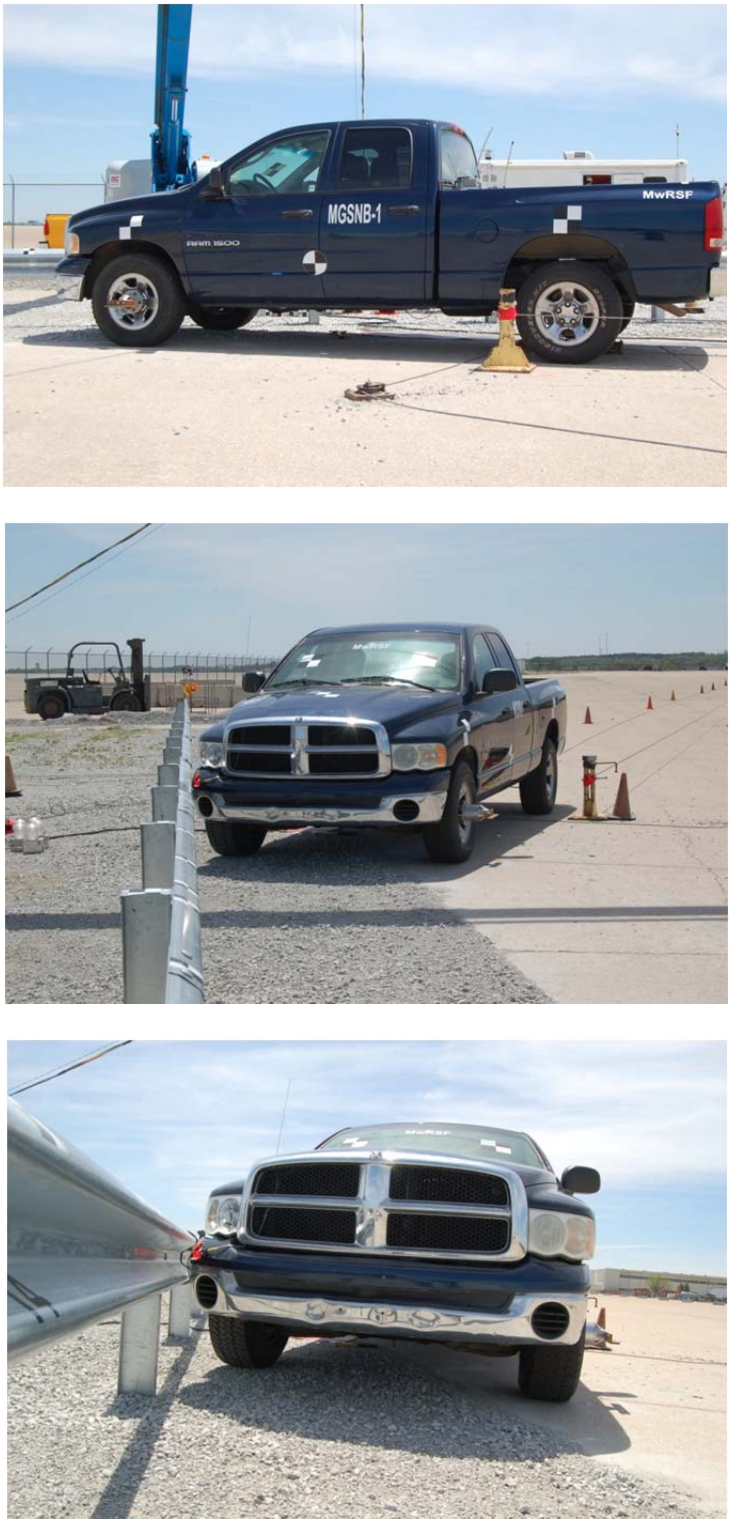

Figure 24. Test Vehicle, Test No. MGSNB-1

Date: 5/17/2011 | Test Number: MGSNB-1 | Model: 2270P/Ram 1500

Make: Dodge | Vehicle I.D.#: 1D7HA18N44S736459

Tire Size: 265/70 R17 | Year: 2004 | Odometer: 107664

Tire Inflation Pressure: 35psi.

*(All Measurements Refer to Impacting Side)

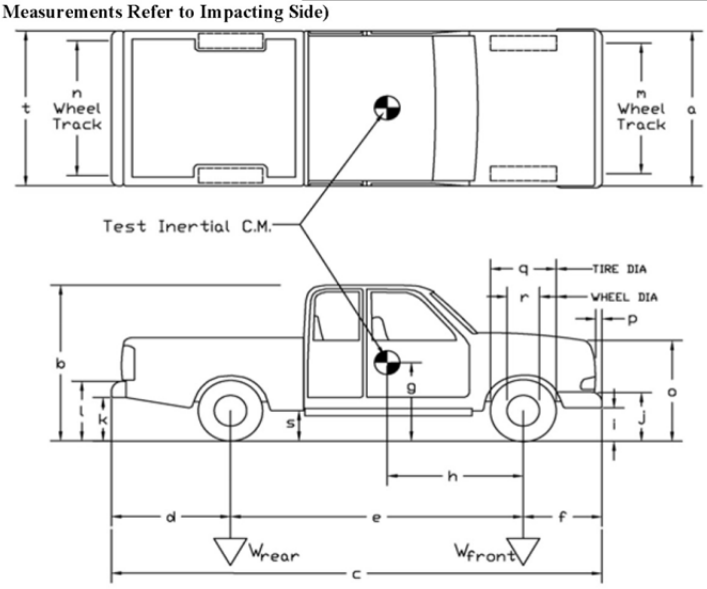

Vehicle Geometry -- in. (mm)

a	77 3/4	(1975)	b	74 1/2	(1892)
c	227	(5766)	d	47 1/2	(1207)
e	140 1/4	(3562)	f	39 1/4	(997)
g	28 2/5	(721)	h	63	(1600)
i	15	(381)	j	25 1/4	(641)
k	21	(533)	l	28 1/2	(724)
m	68 1/8	(1730)	n	67 5/8	(1718)
o	43	(1092)	p	2 3/4	(70)
q	31 1/4	(794)	r	18 1/2	(470)
s	16 1/8	(410)	t	75	(1905)
Wheel Center Height Front				14 3/4	(375)
Wheel Center Height Rear				14 7/8	(378)
Wheel Well Clearance (F)				35	(889)
Wheel Well Clearance (R)				37 1/2	(953)
Frame Height (F)				17 1/2	(445)
Frame Height (R)				24 1/2	(622)

Mass Distribution lb (kg)

Gross Static	LF	1421	(645)	RF	1443	(655)
	LR	1159	(526)	RR	1158	(525)

Engine Type: 8cyl gas

Engine Size: 4.7L

Transmition Type: Automatic Manual

FWD RWD 4WD

Weights lb (kg)	Curb		Test Inertial		Gross Static	
W-front	2778	(1260)	2760	(1252)	2864	(1299)
W-rear	2177	(987)	2251	(1021)	2317	(1051)
W-total	4955	(2248)	5011	(2273)	5181	(2350)

GVWR Ratings

Front	3650
Rear	3900
Total	6650

Dummy Data

Type: Hybrid II

Mass: 170 lbs

Seat Position: passenger

Note any damage prior to test: dent in passenger side cab corner, front bumper dents in center

Figure 25. Vehicle Dimensions, Test No. MGSNB-1

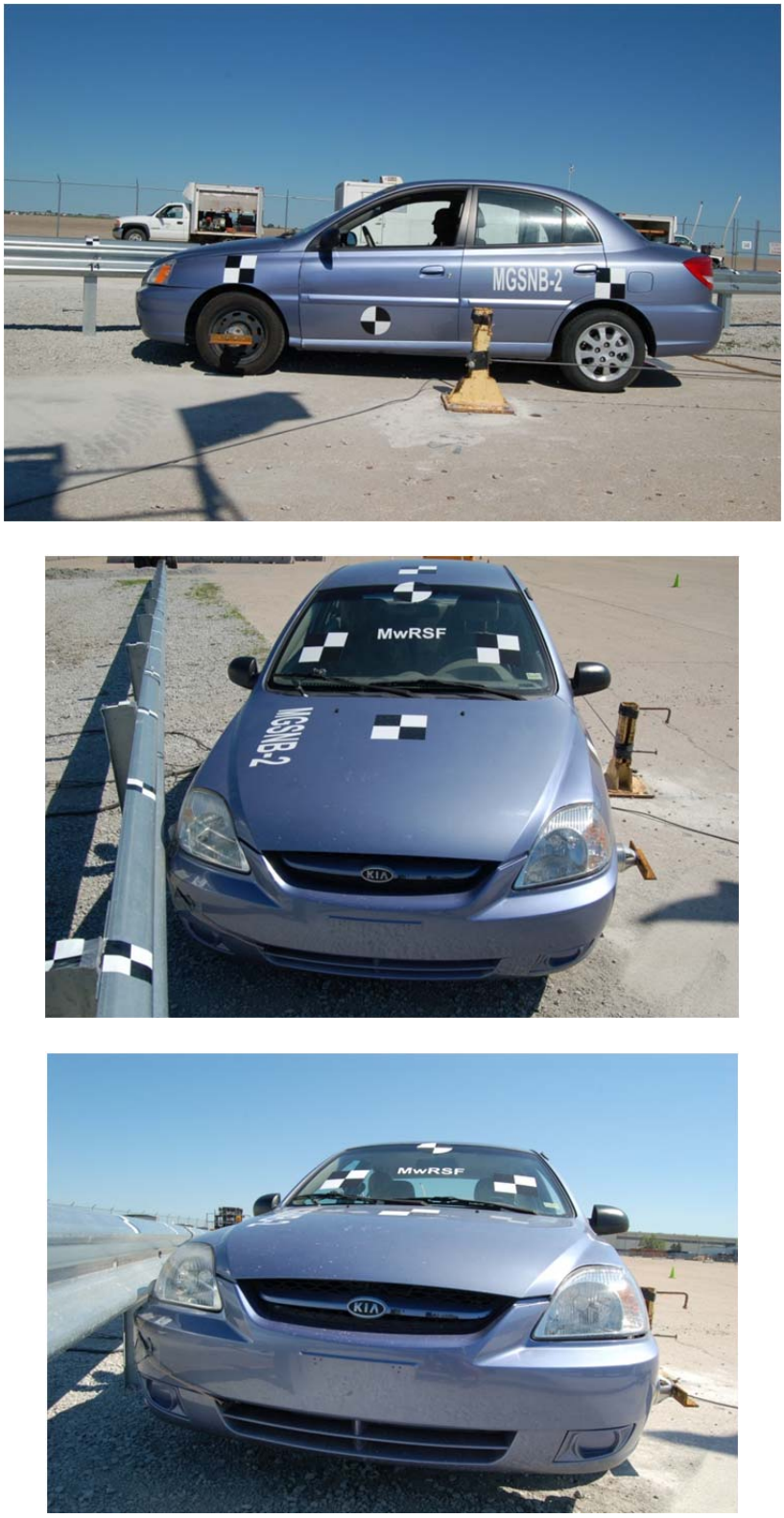

Figure 26. Test Vehicle, Test No. MGSNB-2

Date: 6/15/2011 **Test Number:** MGSNB-2 **Model:** Rio

Make: Kia **Vehicle I.D.#:** KNADC125556380669

Tire Size: 175/65R14 **Year:** 2005 **Odometer:** 58668

Tire Inflation Pressure: 30 psi

*(All Measurements Refer to Impacting Side)

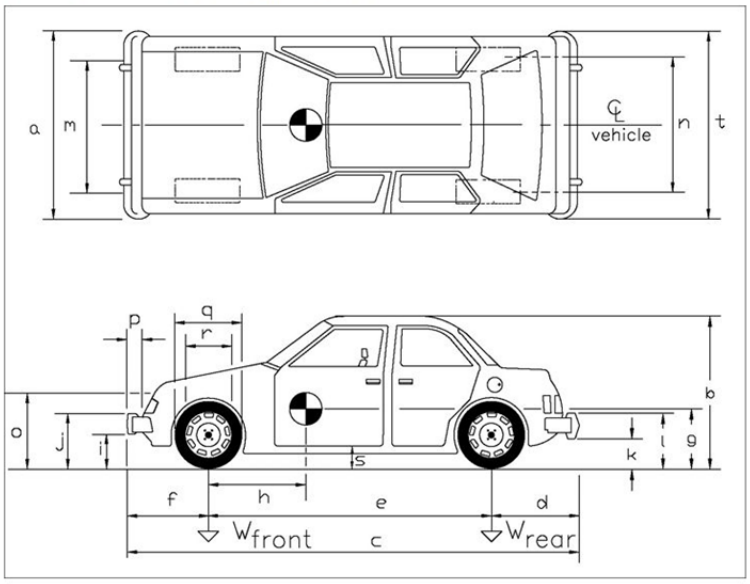

Vehicle Geometry -- in. (mm)

a	65 1/2	(1664)	b	55 3/4	(1416)
c	166 1/2	(4229)	d	37	(940)
e	95 1/4	(2419)	f	34 1/4	(870)
g	16 1/2	(419)	h	35 5/9	(903)
i	9	(229)	j	21	(533)
k	11 1/4	(286)	l	22 1/2	(572)
m	56 3/4	(1441)	n	57	(1448)
o	27 1/2	(699)	p	3	(76)
q	23	(584)	r	15 1/2	(394)
s	12 1/2	(318)	t	64	(1626)
Wheel Center Height Front				10 1/2	(267)
Wheel Center Height Rear				11	(279)
Wheel Well Clearance (F)				24 1/2	(622)
Wheel Well Clearance (R)				24 3/4	(629)
Frame Height (F)				7 3/4	(197)
Frame Height (R)				16 1/4	(413)

Mass Distribution lb (kg)

Gross Static	LF	771	(350)	RF	797 (362)
	LR	489	(222)	RR	520 (236)

Engine Type 4 cyl.

Engine Size 1.6

Transmition Type: Automatic Manual

FWD RWD 4WD

Weights lb (kg)	Curb		Test Inertial		Gross Static	
W-front	1538	(698)	1478	(670)	1569	(712)
W-rear	837	(380)	930	(422)	1010	(458)
W-total	2375	(1077)	2408	(1092)	2578	(1169)

GVWR Ratings

Front	1808
Rear	1742
Total	3399

Dummy Data

Type: Hybrid II

Mass: 170 lbs.

Seat Position: passenger

Note any damage prior to test: None

Figure 27. Vehicle Dimensions, Test No. MGSNB-2

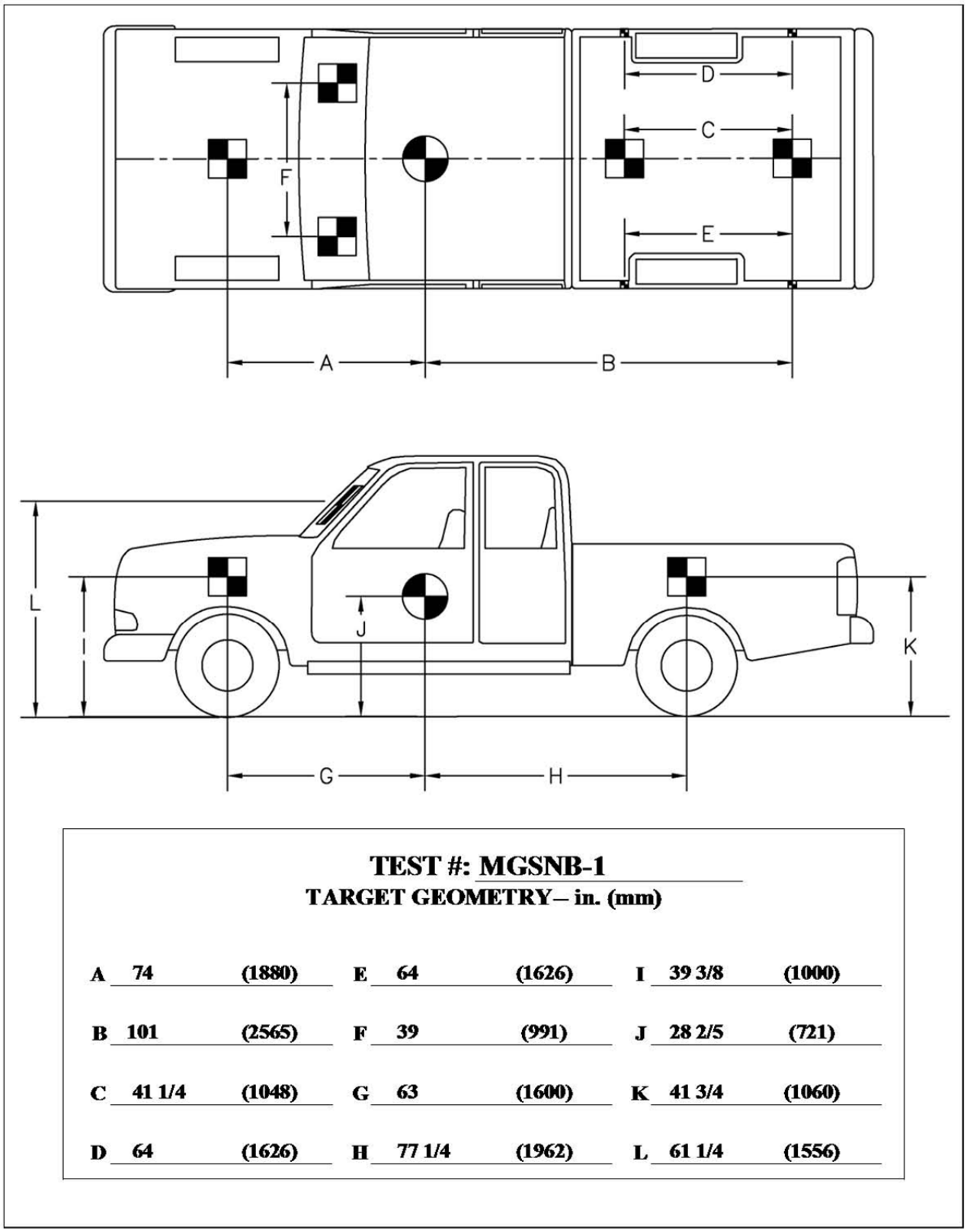

Figure 28. Target Geometry, Test No. MGSNB-1

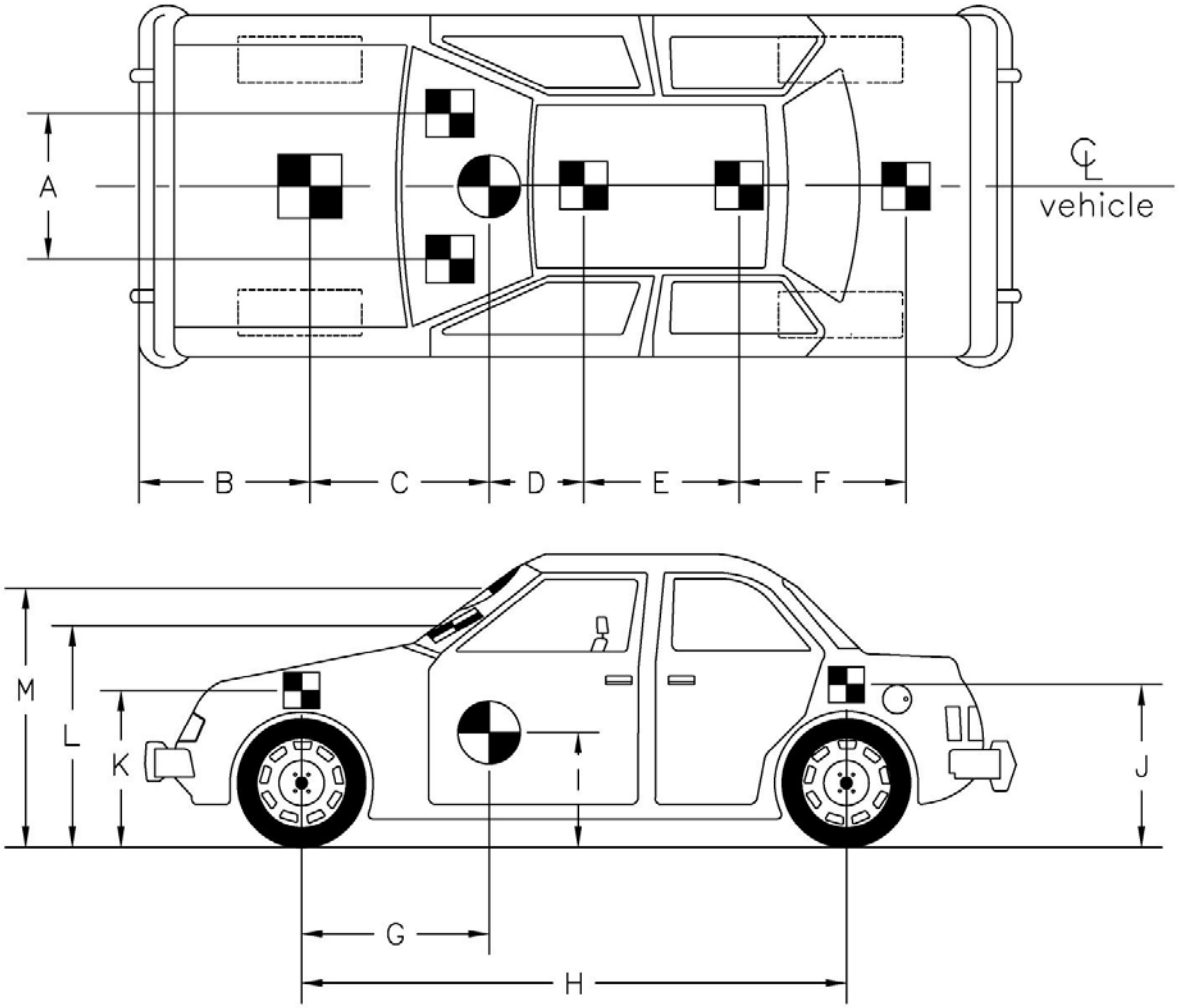

TEST #: MGSNB-2

TARGET GEOMETRY-- in. (mm)

A	**32 1/4**	**(819)**	**E**	**39**	**(991)**	**I**	**16 1/2**	**(419)**
B	**27 1/2**	**(699)**	**F**	**36 1/2**	**(927)**	**J**	**28 3/4**	**(730)**
C	**39 3/4**	**(1010)**	**G**	**35**	**(889)**	**K**	**28 1/4**	**(718)**
D	**12**	**(305)**	**H**	**95**	**(2413)**	**L**	**42 1/2**	**(1080)**
						M	**50 3/4**	**(1289)**

Figure 29. Target Geometry, Test No. MGSNB-2

4.4 Simulated Occupant

For test no. MGSNB-1 and MGSNB-2, a Hybrid II 50th Percentile Adult Male Dummy, equipped with clothing and footwear, was placed in the right-front seat of the test vehicle with the seat belt fastened. The dummy, which had a final weight of 170 lb (77 kg), was represented by model no. 572, serial no. 451, and was manufactured by Android Systems of Carson, California. As recommended by MASH, the weight of the dummy was not included in calculating the c.g location.

4.5 Data Acquisition Systems

4.5.1 Accelerometers

Three environmental shock and vibration sensor/recorder systems were used to measure the accelerations in the longitudinal, lateral, and vertical directions. All of the accelerometers were mounted near the center of gravity of the test vehicles.

The first accelerometer system was a two-arm piezoresistive accelerometer system manufactured by Endevco of San Juan Capistrano, California. Three accelerometers were used to measure each of the longitudinal, lateral, and vertical accelerations independently at a sample rate of 10,000 Hz. The accelerometers were configured and controlled using a system developed and manufactured by Diversified Technical Systems, Inc. (DTS) of Seal Beach, California. More specifically, data was collected using a DTS Sensor Input Module (SIM), Model TDAS3-SIM-16M. The SIM was configured with 16 MB SRAM and 8 sensor input channels with 250 kB SRAM/channel. The SIM was mounted on a TDAS3-R4 module rack. The module rack was configured with isolated power/event/communications, 10BaseT Ethernet and RS232 communication, and an internal backup battery. Both the SIM and module rack were crashworthy. The “DTS TDAS Control” computer software program and a customized Microsoft Excel worksheet were used to analyze and plot the accelerometer data.

The second system, Model EDR-3, was a triaxial piezoresistive accelerometer system manufactured by IST of Okemos, Michigan. The EDR-3 was configured with 256 kB of RAM, a range of ±200 g's, a sample rate of 3,200 Hz, and a 1,120 Hz low-pass filter. The "DynaMax 1 (DM-1)" computer software program and a customized Microsoft Excel worksheet were used to analyze and plot the accelerometer data.

4.5.2 Rate Transducers

An angular rate sensor, the ARS-1500, with a range of 1,500 degrees/sec in each of the three directions (roll, pitch, and yaw) was used to measure the rates of rotation of the test vehicles. The angular rate sensor was mounted on an aluminum block inside the test vehicle near the center of gravity and recorded data at 10,000 Hz to the SIM. The raw data measurements were then downloaded, converted to the proper Euler angles for analysis, and plotted. The "DTS TDAS Control" computer software program and a customized Microsoft Excel worksheet were used to analyze and plot the angular rate sensor data.

A second system, an Analog Systems 3-axis rate transducer with a range of 1,200 degrees/sec in each of the three directions (roll, pitch, and yaw), was used to measure the rates of motion of the test vehicles. The rate transducer was mounted inside the body of the EDR-4 6DOF-500/1200 and recorded data at 10,000 Hz to a second data acquisition board inside the EDR-4 6DOF-500/1200 housing. The raw data measurements were then downloaded, converted to the appropriate Euler angles for analysis, and plotted. The "EDR4COM" and "DynaMax Suite" computer software programs and a customized Microsoft Excel worksheet were used to analyze and plot the angular rate transducer data.

4.5.3 Pressure Tape Switches

For test nos. MGSNB-1 and MGSNB-2, five pressure-activated tape switches, spaced at approximately 6.56 ft (2 m) intervals, were used to determine the speed of the vehicle before

impact. Each tape switch fired a strobe light, which sent an electronic timing signal to the data acquisition system as the right-front tire of the test vehicle passed over it. Test vehicle speeds were determined from electronic timing mark data recorded using TestPoint and LabVIEW computer software programs. Strobe lights and high-speed video analysis are used only as a backup in the event that vehicle speed cannot be determined from the electronic data.

4.5.4 Digital Cameras

Three AOS VITcam high-speed digital video cameras, three AOS X-PRI high-speed digital video cameras, four JVC digital video cameras, and two Canon digital video cameras were utilized to film test no. MGSNB-1. Camera details, camera operating speeds, lens information, and a schematic of the camera locations relative to the system are shown in Figure 30.

Four AOS VITcam high-speed digital video cameras, three AOS X-PRI high-speed digital video cameras, four JVC digital video cameras, and two Canon digital video cameras were utilized to film test no. MGSNB-2. Camera details, camera operating speeds, lens information, and a schematic of the camera locations relative to the system are shown in Figure 31.

The high-speed videos were analyzed using the ImageExpress MotionPlus and RedLake MotionScope software programs. Actual camera speed and camera divergence factors were considered in the analysis of the high-speed digital videos. A Nikon D50 digital still camera was also used to document pre-test and post-test conditions for the tests.

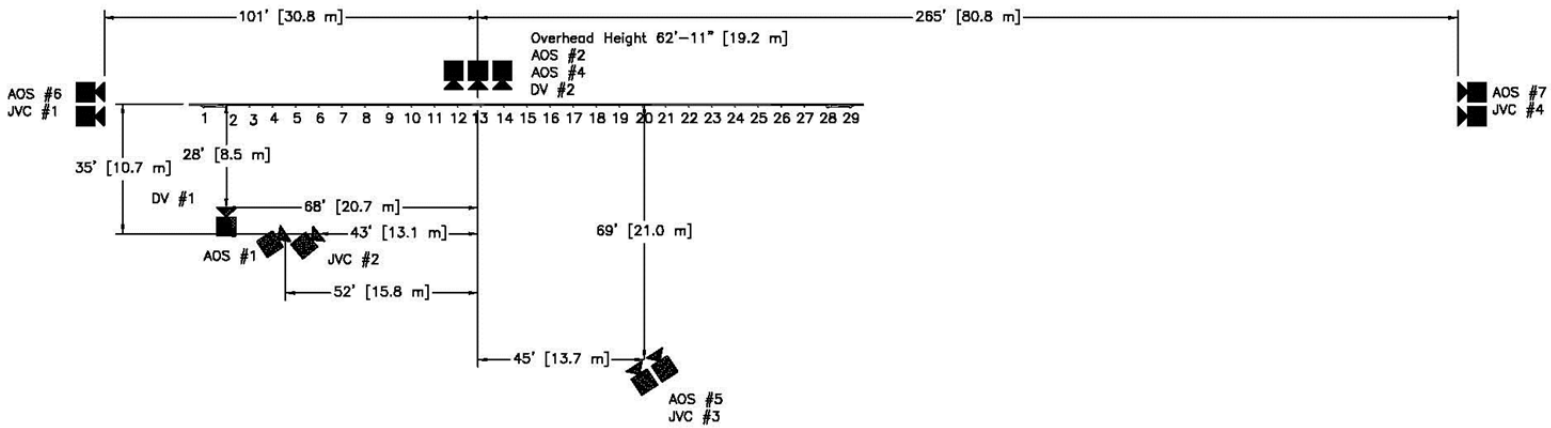

	No.	Type	Operating Speed (frames/sec)	Lens	Lens Setting
High-Speed Video	1	AOS Vitcam CTM	500	Osawa 28-80	80
	2	AOS Vitcam	500	Cosmicar 12.5 mm fixed	-
	4	AOS Vitcam	500	Cannon 17-102 mm	20
	5	AOS X-PRI	500	Fujinon 50 mm fixed	-
	6	AOS X-PRI	500	Sigma 50 mm fixed	-
	7	AOS X-PRI	500	Sigma 24-135	135
Digital Video	1	JVC – GZ-MC500 (Everio)	29.97		
	2	JVC – GZ-MG27u (Everio)	29.97		
	3	JVC – GZ-MG27u (Everio)	29.97		
	4	JVC – GZ-MG27u (Everio)	29.97		
	1	Canon ZR90	29.97		
	2	Canon ZR10	29.97		

Figure 30. Camera Locations, Speeds, and Lens Settings, Test No. MGSNB-1

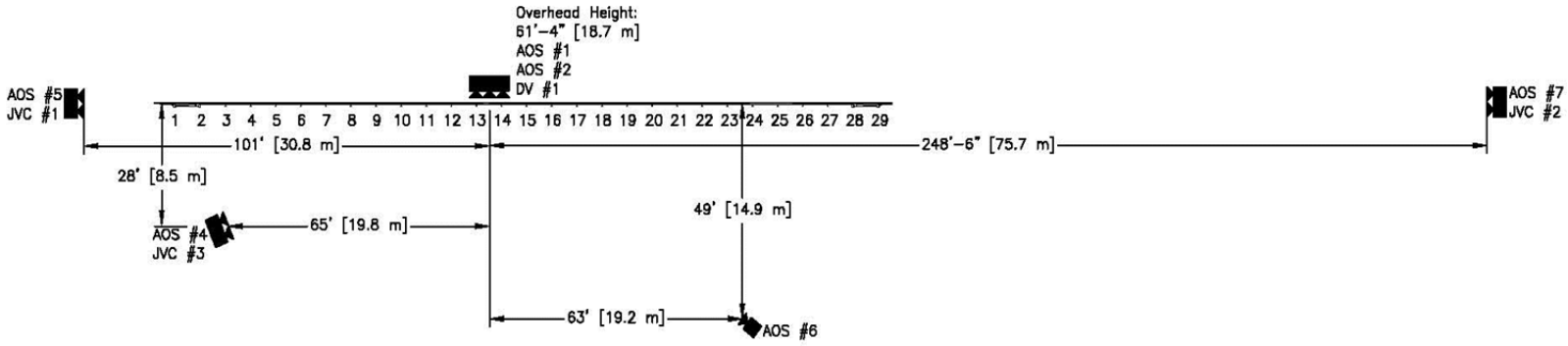

	No.	Type	Operating Speed (frames/sec)	Lens	Lens Setting
High-Speed Video	1	Vitcam CTM	500	Cosmicar 12.5 mm fixed	-
	2	AOS Vitcam	500	Kowa 8 mm fixed	-
	4	AOS Vitcam	500	Sigma 24 mm-135 mm	100
	5	AOS X-PRI	500	Fuji 50 mm fixed	-
	6	AOS X-PRI	500	Sigma 50 mm fixed	-
	7	AOS X-PRI	500	Canon 17 mm – 102 mm	102
Digital Video	1	JVC – GZ-MC500 (Everio)	29.97		
	2	JVC – GZ-MG27u (Everio)	29.97		
	3	JVC – GZ-MG27u (Everio)	29.97		
	4	JVC – GZ-MG27u (Everio)	29.97		
	1	Canon ZR90	29.97		
	2	Canon ZR10	29.97		

Figure 31. Camera Locations, Speeds, and Lens Settings, Test No. MGSNB-2

5 FULL SCALE CRASH TEST NO. MGSNB-1

5.1 Static Soil Test

Before full-scale test no. MGSNB-1 was conducted, the strength of the foundation soil was evaluated with a static test, as described in MASH. The static test results, as shown in Appendix C, demonstrated a soil resistance above the baseline test limits. Thus, the soil provided adequate strength, and full-scale crash testing could be conducted on the barrier system.

5.2 Test No. MGSNB-1

The 5,181-lb (2,350-kg) pickup truck impacted the non-blocked MGS at a speed of 62.7 mph (100.9 km/h) and at an angle of 24.7 degrees. A summary of the test results and sequential photographs are shown in Figure 32. Additional sequential photographs are shown in Figures 33 through 34. Documentary photographs of the crash test are shown in Figures 35 and 36.

5.3 Weather Conditions

Test no. MGSNB-1 was conducted on May 17, 2011 at approximately 2:30 pm. The weather conditions as per the National Oceanic and Atmospheric Administration (station 14939/LNK) were reported as shown in Table 3.

Table 3. Weather Conditions, Test No. MGSNB-1

Temperature	71° F
Humidity	93%
Wind Speed	7.6 mph
Wind Direction	130° from True North
Sky Conditions	Overcast
Visibility	10 miles
Pavement Surface	Dry
Previous 3-Day Precipitation	0.00 in.
Previous 7-Day Precipitation	0.77 in.

5.4 Test Description

Initial vehicle impact was to occur 13 ft – 3½ in. (4.1 m) upstream of the centerline of post no. 15, as shown in Figure 37, which was selected using the critical impact point (CIP) plots found in Section 2.3 of MASH. The actual point of impact was the intended impact point. A sequential description of the impact events is contained in Table 4. The vehicle came to rest located 190 ft – 4 in. (58.0 m) downstream from impact and 51 ft (15.6 m) laterally behind the traffic-side face of the rail. The vehicle trajectory and final position are shown in Figures 32 and 38.

Table 4. Sequential Description of Impact Events, Test No. MGSNB-1

Time (sec)	EVENT
0.000	The right-front corner of the vehicle impacted the traffic-side face of the guardrail at the intended impact location.
0.008	Post no. 13 deflected backward, and the right-front fender deformed.
0.014	The right-front quarter panel deformed inward, and post no. 14 deflected downstream and backward.
0.016	Vehicle right front tire contacted backside of Post no. 13
0.022	A buckle point formed in the rail upstream of post no. 14, the rail began to deform downstream of post no. 13, and post no. 15 deflected downstream and backward.
0.028	The rail flattened at the midspan between post nos. 13 and 14, and the vehicle began to redirect.
0.034	A buckle point formed in the rail at the midspan of post nos. 14 and 15 and downstream of post no. 14, post nos. 9 through 12 deflected downstream, and post nos. 16 through 18 deflected upstream.
0.044	The rail deflected forward at the end terminal, and post no. 14 twisted upstream.
0.052	A buckle point formed in the rail upstream of post no. 15.
0.066	Post no. 14 separated from rail.
0.068	A buckle point in the rail downstream of post nos. 13 and 15 and post no. 15 twisted upstream.
0.076	The right-side door contacted the rail.
0.080	Vehicle right front tire overlapped Post no. 14
0.092	The right-front tire was contacting Post no. 14; a buckle point formed in the rail upstream of post no. 16, and the vehicle began to yaw away from the barrier.
0.100	The right-front tire contacted with post no. 14 and snagged, causing disconnection.
0.112	Post no. 14 bent to the ground as the right-front tire overrode it.
0.122	The right-front door became ajar.

0.128	The right-front window shattered due to contact of the surrogate occupant's head.
0.134	Post no. 15 separated from rail.
0.138	A buckle point formed in the rail downstream of post no. 16.
0.176	The right-front tire contacted post no. 15 and the rail disengaged from post no. 15.
0.186	The right-front tire disengaged from the vehicle.
0.192	The right-rear quarter panel contacted the rail.
0.200	The vehicle yawed away from the system.
0.224	The left-rear tire became airborne as the vehicle rolled toward the barrier.
0.238	The left-front tire was airborne.
0.248	The vehicle became parallel to the system with a velocity of 47.9 mph (77.1 km/h).
0.300	The vehicle continued to yaw away from the barrier.
0.400	The tires on the left side remained airborne as the vehicle began to exit the system.
0.500	The vehicle ceased ds yaw and began to roll away from the barrier.
0.504	The vehicle exited the system at a speed of 47.4 mph (76.3 km/h) and at an angle of 14.4 degrees.
0.600	The vehicle pitched downward.
0.646	The left-front tire contacted the ground.
0.792	The left-rear tire contacted the ground.

5.5 Barrier Damage

Damage to the barrier was moderate, as shown in Figures 39 through 42. Barrier damage consisted of deformed W-beam rail, deformed posts, and contact marks on sections of guardrail and posts. The length of vehicle contact along the barrier was approximately 23 ft – 6 in. (7.2 m) which spanned from 21 in. (533 mm) upstream of the centerline of post no. 13 to 41¾ in. (1,060 mm) downstream of the centerline of post no. 16.

Deformation, flattening, and kinking of the W-beam guardrail occurred between post nos. 12 and 16. The splices located between post nos. 12 and 13 and post nos. 14 and 15 encountered slip of $^{3}/_{8}$ in. (10 mm) and less than $^{1}/_{8}$ in. (3 mm), respectively. The W-beam guardrail was detached from post nos. 14 and 15 as the bolt head was pulled through the rail. Vertical tears occurred on both the upstream and downstream sides of the post bolt slots at post nos. 14 and 15. The post bolt slot at post no. 16 yielded around the post bolt.

Post nos. 12 through 17 rotated backward. Post no. 14 also bent downstream, and post no. 15 rotated downstream. Tire marks and scratches were observed on the front face of post nos. 13 and 14 just below the rail. The front flange of post no. 14 buckled 15 in. (381 mm) from the top, and the post twisted such that the front flange faced upstream. The upstream edge of the front flange of post no. 15 encountered tire marks and buckle points at 15 in. (381 mm) and 24 in. (610 mm) from the top of the post. The front flange of post no. 16 twisted upstream. A gouge was found on the upstream edge of the front flange of post no. 16 at 22 ¾ in. (578 mm) from the top of the post.

The W-beam backup plate at post no. 14 disengaged and the top corrugation was deformed. The bottom corrugation of the W-beam backup plate at post no. 15 was buckled. A 1¼-in. (32-mm) gap between the top of the backup plate and the rail section was formed at post no. 16. A ½-in (13-mm) gap between the backup plate and the top of the rail section was found at post no. 17.

The maximum lateral permanent set rail and deflections were 19 ⅜ in. (492 mm) at the midspan between post nos. 14 and 15 and 19 ⅜ in. (492 mm) at post no. 15, respectively, as measured at the test site. The maximum lateral dynamic rail and post deflections were 34.1 in. (867 mm) at the midspan between post nos. 14 and 15 and 30.5 in (775 mm) at post no. 14, respectively, as determined from high-speed digital video analysis. The working width of the system was 43.2 in. (1,097 mm), also determined from high-speed digital video analysis.

5.6 Vehicle Damage

Damage to the vehicle was moderate, as shown in Figures 44 and 45. The maximum occupant compartment deformations are listed in Table 5 along with the deformation limits established in MASH for various areas of the occupant compartment. None of the MASH

established deformation limits were violated. Complete occupant compartment and vehicle deformations and the corresponding locations are provided in Appendix D.

Table 5. Maximum Occupant Compartment Deformations by Location

LOCATION	MAXIMUM DEFORMATION in. (mm)	MASH ALLOWABLE DEFORMATION in. (mm)
Wheel Well & Toe Pan	¾ (19)	≤ 9 (229)
Floor Pan & Transmission Tunnel	¾ (19)	≤ 12 (305)
Side Front Panel (in Front of A-Pillar)	½ (13)	≤ 12 (305)
Side Door (Above Seat)	1¼ (32)	≤ 9 (229)
Side Door (Below Seat)	1 (25)	≤ 12 (305)
Roof	NA	≤ 4 (102)
Windshield	NA	≤ 3 (76)

The majority of the damage was concentrated on the right-front corner and right side of the vehicle. The right-front tire was detached from the vehicle at the ball joint. The right-front tire was torn, and the steel rim was scratched and deformed. The right-front lower control arm fractured at the tie rod. The right-front tie rod and sway bar linkage were bent. The right-front wheel well was deformed inward and downward, and the right-front fender was bent inward. The right-side headlight was disengaged from the vehicle and fractured. The right-side of the front bumper was deformed inward toward the engine compartment. The left side of the front bumper was scraped, and a 1¾-in. (44-mm) gap was found between the front bumper and the left-side headlight. The lower portion of the center of the grill was fractured. The left side of the hood was ajar 1 in. (25 mm). The left-front wheel well was torn. The right side of the rear bumper was deformed and deflected downward 3½ in. (89 mm). The right side of the box rotated outward at the top and crushed inward at the bottom. The right-rear tire was torn and deflated. Deformations and contact marks extended along the entire right side of the vehicle. Both right-side doors were

ajar at the top. The right-front door was crushed inward at the bottom. The right-front door window was shattered, and the mirror glass was disengaged. All other window glass remained undamaged.

5.7 Occupant Risk

The calculated occupant impact velocities (OIVs) and maximum 0.010-sec occupant ridedown accelerations (ORAs) in both the longitudinal and lateral directions are shown in Table 6. Note that the OIVs and ORAs were within the suggested limits provided in MASH. The calculated THIV, PHD, and ASI values are also shown in Table 6. The results of the occupant risk analysis, as determined from the accelerometer data, are summarized in Figure 32. The recorded data from the accelerometers and the rate transducers are shown graphically in Appendix E. Due to technical difficulties, the EDR-4 unit did not collect acceleration data, but the EDR-4 did collect angular data from the rate transducer.

Table 6. Summary of OIV, ORA, THIV, PHD, and ASI Values, Test No. MGSNB-1

Evaluation Criteria		**Transducer**		**MASH Limits**
		EDR-3	**DTS**	
OIV ft/s (m/s)	Longitudinal	-19.40 (-5.91)	-17.13 (-5.22)	≤ 40 (12.2)
	Lateral	-17.22 (-5.25)	-18.67 (-5.69)	≤40 (12.2)
ORA g's	Longitudinal	-11.20	-11.49	≤ 20.49
	Lateral	-8.51	-12.91	≤ 20.49
THIV ft/s (m/s)		NA	24.09 (7.34)	not required
PHD g's		NA	14.0	not required
ASI		0.86	0.90	not required

5.8 Discussion

The analysis of the test results for test no. MGSNB-1 showed that the non-blocked MGS adequately contained and redirected the 2270P vehicle with controlled lateral displacements of the barrier. There were no detached elements nor fragments which showed potential for penetrating the occupant compartment nor presented undue hazard to other traffic. Deformations of, or intrusions into, the occupant compartment that could have caused serious injury did not occur. The test vehicle did not penetrate nor ride over the barrier and remained upright during and after the collision. Vehicle roll, pitch, and yaw angular displacements, as shown in Appendix E, were deemed acceptable because they did not adversely influence occupant risk safety criteria nor cause rollover. After impact, the vehicle exited the barrier at an angle of 14.4 degrees and its trajectory did not violate the bounds of the exit box. Therefore, test no. MGSNB-1 conducted on the non-blocked MGS was determined to be acceptable according to the MASH safety performance criteria for test designation no. 3-11.

0.000 sec 0.060 sec 0.120 sec 0.180 sec 0.240 sec

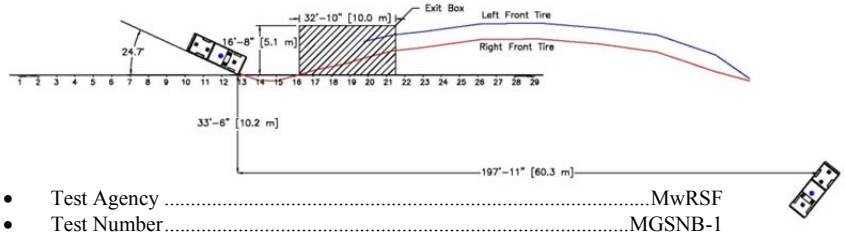

- Test Agency ..... MwRSF
- Test Number MGSNB-1
- Date 5/17/2011
- MASH Test Designation 3-11
- Test Article ..... Non-Blocked MGS
- Total Length ..... 181 ft - 3 in. (55.3 m)
- Key Component – Steel MGS Rail
  - Thickness ..... 12 gauge (2.66 mm)
  - Top Mounting Height ..... 31 in. (787 mm)
- Key Component – Steel Posts
  - Post Type ..... W6x8.5 by 6' (W152x12.6 by 1,829 mm)
  - Post Spacing ..... 75 in. (1,905 mm)
- Key Component – Steel W-beam Backup Plates
  - Thickness ..... 12 gauge (2.66 mm)
  - Length ..... 12 in. (305 mm)
- Soil Type ..... Grading B - AASHTO M 147-65 (1990)
- Vehicle Make /Model ..... 2004 Dodge Ram 1500 Quad Cab
  - Curb ..... 4,955 lb (2,248 kg)
  - Test Inertial ..... 5,011 lb (2,273 kg)
  - Gross Static ..... 5,181 lb (2,350 kg)
- Impact Conditions
  - Speed ..... 62.7 mph (100.9 km/h)
  - Angle ..... 24.7 deg
  - Impact Location ..... 14 ft - 3 in. (4.3 m) upstream of Post No. 15
- Exit Conditions
  - Speed ..... 47.4 mph (76.3 km/h)
  - Angle ..... 14.4 deg
- Exit Box Criterion ..... Pass
- Vehicle Stability ..... Satisfactory
- Vehicle Stopping Distance ..... 197 ft – 11 in. (60.3 m) downstream
  33 ft – 6 in. (10.2 m) laterally behind

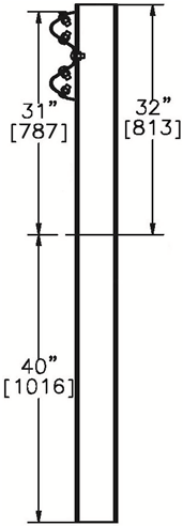

- Vehicle Damage ..... Moderate
  - VDS[13] 01-RFQ-4
  - CDC[14] 01-RYEW-3
  - Maximum Interior Deformation ..... 1¼ in. (32 mm)
- Test Article Damage ..... Moderate
- Test Article Deflections
  - Permanent Set ..... 19 3/8 in. (492 mm)
  - Dynamic ..... 34.1 in. (867 mm)
  - Working Width ..... 43.2 in. (1,097 mm)
- Maximum Angular Displacements
  - Roll ..... 15.7° < 75°
  - Pitch ..... 5.3° < 75°
  - Yaw ..... 50.6°
- Impact Severity (IS) ..... 115.1 kip-ft (156.1 kJ) > 106 kip-ft (144 kJ)
- Transducer Data

Evaluation Criteria		Transducer		MASH
		EDR-3	DTS	Limit
OIV ft/s (m/s)	Longitudinal	-19.40 (-5.91)	-17.13 (-5.22)	≤ 40 (12.2)
	Lateral	-17.22 (-5.25)	-18.67 (-5.69)	≤ 40 (12.2)
ORA g's	Longitudinal	-11.20	-11.49	≤ 20.49
	Lateral	-8.51	-12.91	≤ 20.49
THIV – ft/s (m/s)		NA	24.09 (7.34)	not required
PHD – g's		NA	14.0	not required
ASI		0.86	0.90	not required

Figure 32. Summary of Test Results and Sequential Photographs, Test No. MGSNB-1

0.000 sec

0.130 sec

0.260 sec

0.390 sec

0.520 sec

0.650 sec

0.000 sec

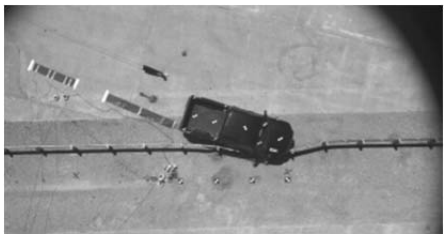
0.130 sec

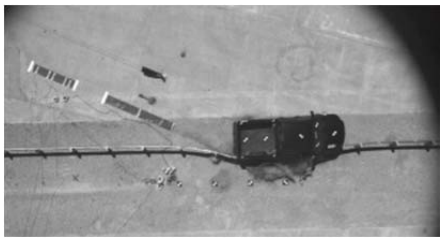
0.260

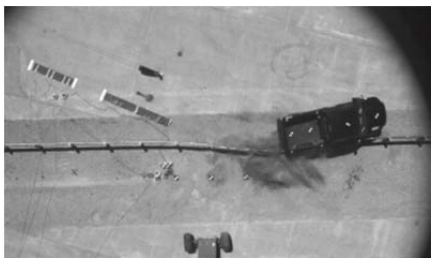
0.390 sec

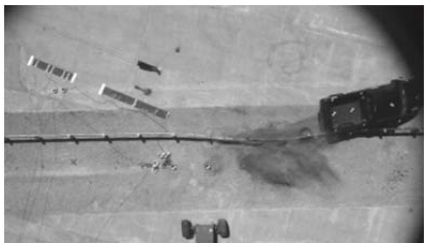
0.520 sec

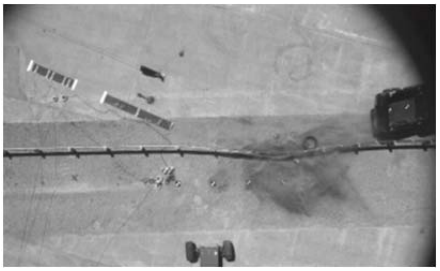
0.650 sec

Figure 33. Additional Sequential Photographs, Test No. MGSNB-1

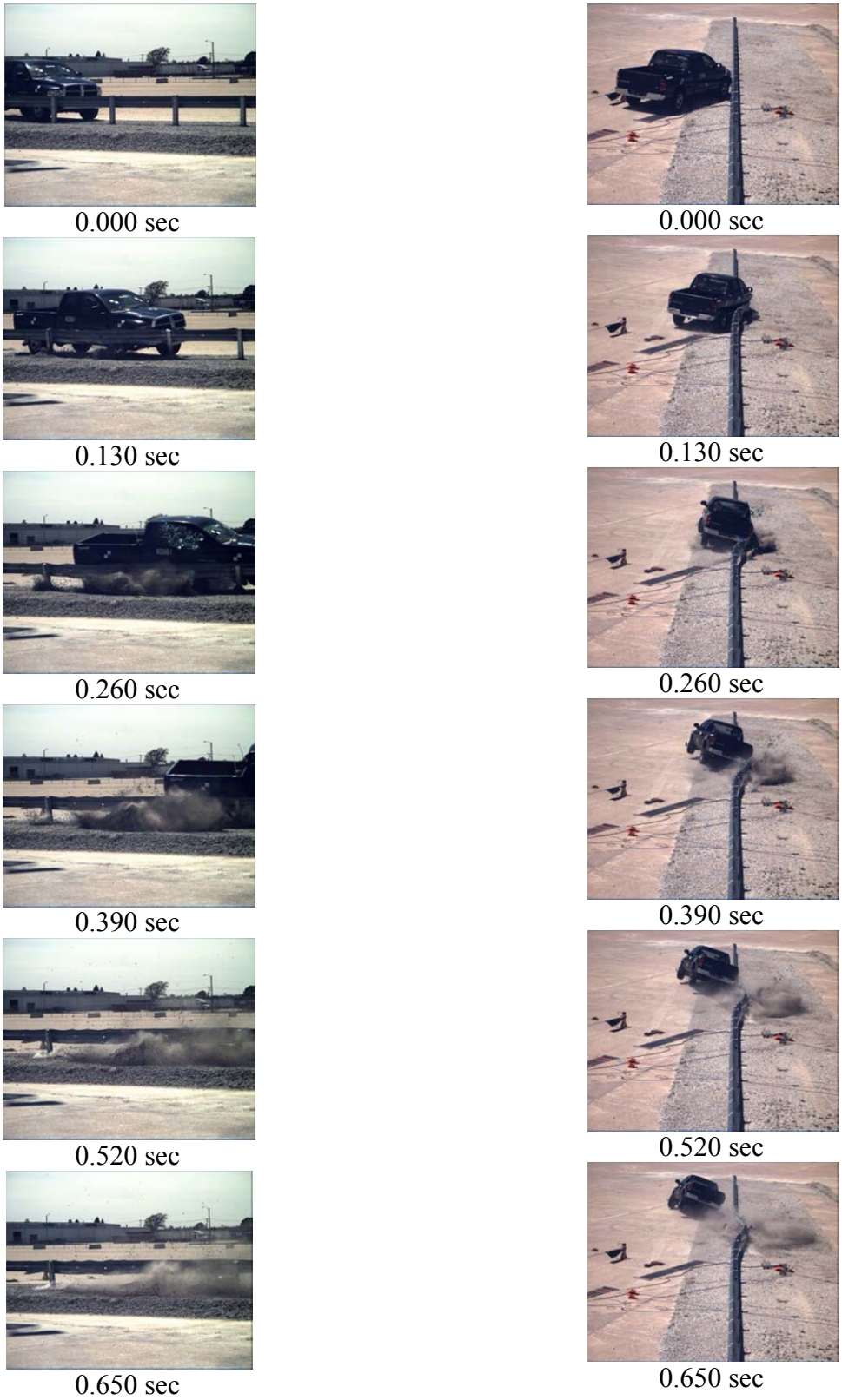

Figure 34. Additional Sequential Photographs, Test No. MGSNB-1

0.000 sec

0.170 sec

0.330 sec

0.500 sec

0.670 sec

0.830 sec

1.000 sec

0.000 sec

0.200 sec

0.400 sec

0.600 sec

0.800 sec

1.000 sec

1.200 sec

Figure 35. Documentary Photographs, Test No. MGSNB-1

0.000 sec

0.130 sec

0.270 sec

0.400 sec

0.530 sec

0.670 sec

0.000 sec

0.100 sec

0.200 sec

0.300 sec

0.400 sec

0.500 sec

Figure 36. Documentary Photographs, Test No. MGSNB-1

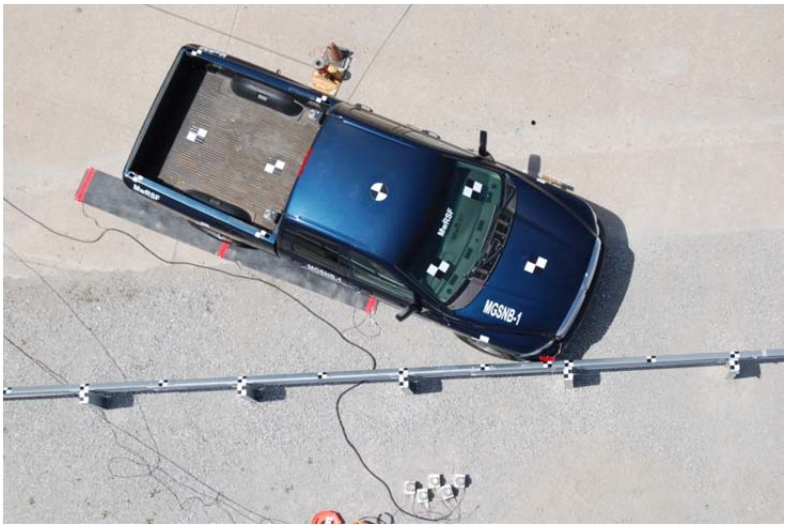

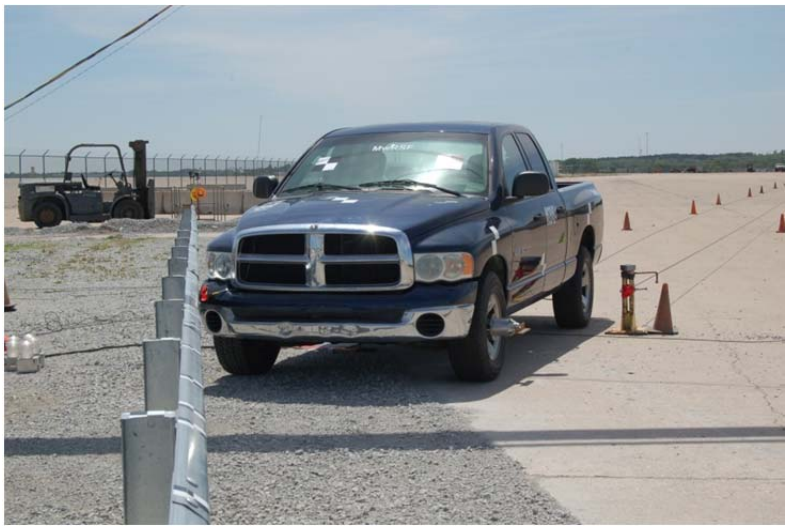

Figure 37. Impact Location, Test No. MGSNB-1

Figure 38. Vehicle Final Position and Trajectory Marks, Test No. MGSNB-1

Figure 39. System Damage, Test No. MGSNB-1

Figure 40. Guardrail Damage between Post Nos. 13 and 17, Test No. MGSNB-1

Figure 41. Guardrail Damage between Post Nos. 13 and 17, Test No. MGSNB-1

Figure 42. Post Damage between Post Nos. 13 and 15, Test No. MGSNB-1

Figure 43. Post Damage between Post Nos. 16 and 17, Test No. MGSNB-1

Figure 44. Vehicle Damage, Test No. MGSNB-1

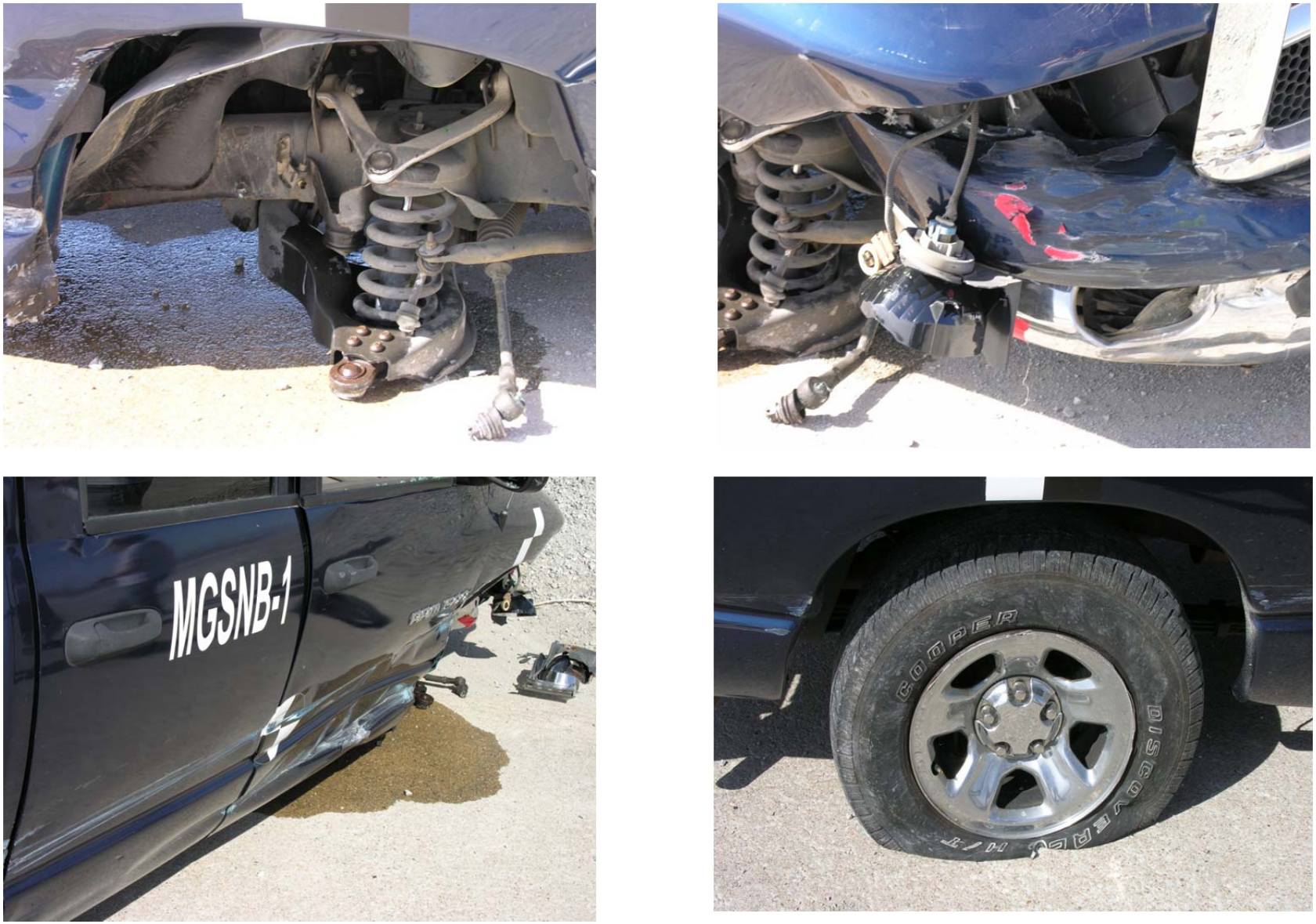

Figure 45. Vehicle Damage, Test No. MGSNB-1

6 FULL SCALE CRASH TEST NO. MGSNB-2

6.1 Static Soil Test

Before full-scale test no. MGSNB-2 was conducted, the strength of the foundation soil was evaluated with a static test, as described in MASH. The static test results, as shown in Appendix C, demonstrated a soil resistance above the baseline test limits. Thus, the soil provided adequate strength, and full-scale crash testing could be conducted on the barrier system.

6.2 Test No. MGSNB-2

The 2,578-lb (1,169-kg) small car impacted the non-blocked MGS at a speed of 63.0 mph (101.4 km/h) and at an angle of 25.5 degrees. A summary of the test results and sequential photographs are shown in Figure 46. Additional sequential photographs are shown in Figures 47 through 49. Documentary photographs of the crash test are shown in Figures 50 and 51.

6.3 Weather Conditions

Test no. MGSNB-2 was conducted on June 15, 2011 at approximately 5:00 pm. The weather conditions as per the National Oceanic and Atmospheric Administration (station 14939/LNK) were reported and are shown in Table 7.

Table 7. Weather Conditions, Test No. MGSNB-2

Temperature	86° F
Humidity	93 %
Wind Speed	8.3 mph
Wind Direction	310° from True North
Sky Conditions	Sunny
Visibility	10 miles
Pavement Surface	Dry
Previous 3-Day Precipitation	0.12 in.
Previous 7-Day Precipitation	0.21 in.

6.4 Test Description

Initial vehicle impact was to occur 9 ft – 3½ in. (2.8 m) upstream of the center line of post no. 15, as shown in Figure 52, which was selected using the CIP plots found in Section 2.3 of MASH. The actual point of impact was 4¼ in. (108 mm) downstream of the intended impact point. A sequential description of the impact events is contained in Table 8. The vehicle came to rest in contact with the barrier system 78 ft – 9 in. (24.0 m) downstream of the impact point. The vehicle trajectory and final position are shown in Figure 53.

Table 8. Sequential Description of Impact Events, Test No. MGSNB-2

Time (sec)	EVENT
0.000	The right-front fender impacted the bottom corrugation of the W-beam 4¼ in. (108 mm) downstream of the intended impact location.
0.008	Post no. 14 and the rail deflected backward at the point of impact, and the right-front corner of the hood protruded over the rail.
0.018	Post no. 13 deflected backward, and the right-front bumper contacted the upstream edge of the front flange of Post no. 14.
0.024	Post no. 15 deflected laterally backward.
0.028	Right side of the bumper shroud tore.
0.030	The right-front corner of the hood crushed inward, and Post no. 12 deflected downstream.
0.036	Post nos. 9 through 11 deflected downstream, and the right-front tire contacted the upstream edge of the front flange of Post no. 14.
0.046	Post no. 14 twisted upstream, and the right-front wheel rotated such that the front of the tire moved out and the rear of the tire moved in.
0.054	The rail disengaged from Post no. 14, the rail flattened at impact, the right side of the vehicle's roof dented inward, the right front tire contacted the rear of the wheel well, and the right-front quarter panel deformed outward behind the right-front wheel well.
0.064	The right-front tire became airborne.
0.074	The vehicle pitched downward and rolled away from the barrier.
0.080	Post no. 16 deflected laterally backward.
0.092	The center of the front bumper contacted the front flange of Post no. 15, and the left headlight disengaged.
0.096	Post no. 16 separated from rail; vehicle rolled toward the barrier.

0.102	The vehicle yawed away from the barrier. The rail disengaged from Post no. 15; vehicle right front tire was overriding Post no. 15.
0.112	Post no. 15 bent downstream.
0.120	The left side of the bumper shroud contacted the ground.
0.126	Post no. 17 deflected backward.
0.134	The right-rear tire became airborne, Post no. 16 began to be pulled out of the ground, and the vehicle pitched upward.
0.148	The right side of the windshield cracked.
0.176	The upper-right corner of the front windshield separated from the liner.
0.182	Post no. 18 deflected backward.
0.190	The left side of the bumper shroud lost contact with the ground.
0.208	The right side of the bumper contacted the upstream side of Post no. 16.
0.236	The vehicle ceased pitching, and Post no.16 was pulled out of the ground.
0.308	The right-rear tire contacted the ground.
0.336	The right-front corner of the vehicle contacted Post no. 17, and Post no. 17 twisted upstream.
0.358	The right-front tire contacted the ground, the vehicle ceased rolling, and the rail disengaged from Post no. 17.
0.404	The vehicle exited the system at a speed of 25.7 mph (41.4 km/h) and at an angle of 19.1 degrees as the right-front corner of the vehicle lost contact with the rail between Post nos. 17 and 18.
0.448	The vehicle yawed toward the barrier.
2.290	The right-front corner of the hood contacted the rail during a secondary impact just upstream of Post no. 25.
2.532	The vehicle yawed away from the barrier.
2.630	The right-front tire contacted Post no. 26 and disengaged from the vehicle.
2.736	The right-front quarter panel behind the right-front tire contacted the ground.
4.000	The vehicle came to rest 78 ft-9 in. (24.0 m) downstream of impact while still in contact with the barrier.

6.5 Barrier Damage

Damage to the barrier was moderate, as shown in Figures 54 through 56. Barrier damage consisted of deformed W-beam rail, deformed posts, and contact marks on sections of guardrail and posts. The length of vehicle contact along the barrier was approximately 20 ft – 7¼ in. (6.3 m) which spanned from 2 ft – 8¼ in. (0.8 m) upstream from the center of post no. 14 to 10 in. (254 mm) upstream from the center of post no. 17. Secondary vehicle contact was 9 ft – 10 in.

(3.0 m) long which spanned from 22 in. (559 mm) upstream of the centerline of post no. 25 to 21 in. (533 mm) downstream of the center line of post no. 26.

Deformations and flattening of the guardrail occurred between post nos. 12 and 18. The bottom corrugation of the rail was deformed upward between post nos. 14 and 17. The top corrugation was flattened between post nos. 14 and 16.

The W-beam guardrail was detached from post nos. 14 through 17. The guardrail bolt head was pulled through the rail at post nos. 14 through 16. However, the guardrail bolt at post no. 17 disengaged from the post and remained attached to the rail. Tears occurred on the downstream side of the post bolt slots at post nos. 14 and 16. The splices located between post nos. 12 and 13 and post nos. 14 and 15 encountered slip of ¾ and ¼ in. (19 and 6 mm), respectively.

Post nos. 11 and 12 twisted slightly downstream. Post no. 13 rotated backward leaving a 2½-in. (64-mm) wide soil gap at the front face of the post. The guardrail bolt tore through the front flange of post nos. 15 through 17. Post nos. 14 and 16 pulled completely out of the ground. Post no. 14 bent downstream to 60 degrees, encountered a 1½-in. (38-mm) long tear in the front flange, and came to rest against the base of post no. 15. Post no. 15 bent downstream to lying flat on the ground. Post no. 16 came to rest near the base of post no. 17. Post no. 17 bent and twisted downstream.

The W-beam backup plate at post nos. 14 through 16 disengaged from the system. The W-beam backup plate from post no. 14 was deformed about the middle of the corrugations. The W-beam backup plate from post no. 15 twisted. The bottom corrugation of the W-beam backup plate from post no. 16 was deformed and buckled. The W-beam backup plate at post no. 17 remained attached to the rail with the bottom corrugation buckled. The flange of post no. 17 tore and was found between the guardrail bolt head and the W-beam backup plate.

The maximum lateral permanent set rail and post deflections were $13^7/_8$ in. (352 mm) at post no. 15, and $13^7/_8$ in. (352 mm) at the midspan between post nos. 14 and 15, respectively as measured at the test site. The maximum lateral dynamic rail and post deflections were 29.1 in. (740 mm) at post no. 15, and 23.0 in. (584 mm) at the midspan between post nos. 14 and 15, respectively as determined from high-speed digital video analysis. The working width of the system was 34.5 in. (877 mm), also determined from high-speed digital video analysis.

6.6 Vehicle Damage

Damage to the vehicle was moderate, as shown in Figures 57 and 58. The maximum occupant compartment deformations are listed in Table 9 along with the deformation limits established in MASH for various areas of the occupant compartment. None of the MASH established deformation limits were violated. Complete occupant compartment and vehicle deformations and the corresponding locations are provided in Appendix D.

Table 9. Maximum Occupant Compartment Deformations by Location

LOCATION	MAXIMUM DEFORMATION in. (mm)	MASH ALLOWABLE DEFORMATION in. (mm)
Wheel Well & Toe Pan	¾ (19)	≤ 9 (229)
Floor Pan & Transmission Tunnel	1 (25)	≤ 12 (305)
Side Front Panel (in Front of A-Pillar)	0 (0)	≤ 12 (305)
Side Door (Above Seat)	¼ (6)	≤ 9 (229)
Side Door (Below Seat)	½ (13)	≤ 12 (305)
Roof	1¼ (32)	≤ 4 (102)
Windshield	0 (0)	≤ 3 (76)

The majority of the damage was concentrated on the right-front corner and right side of the vehicle. The right-front wheel assembly remained attached by only the brake line. The right-front steel rim was dented and encountered a 5-in. (127-mm) long tear on the inside. The right-

front tire was torn. The right-front fender was crushed inward, gouged, and buckled. Contact marks, 35-in. (889-m) long, extended along the right side of the vehicle beginning at the right-front door. The right-front corner of the hood folded underneath itself. The right-side headlight was disengaged from the vehicle. The right-side A-pillar was buckled at its base. The right-side of the roof was crushed downward 1¼ in. (32 mm). The right-front door was ajar at the top. The front bumper cover was partially disengaged. The left-side headlight was only attached by its power cord. The radiator and right-side floor pan were dented. The lower-right corner of the windshield was cracked. All other window glass remained undamaged.

6.7 Occupant Risk

The calculated occupant impact velocities (OIVs) and maximum 0.010-sec occupant ridedown accelerations (ORAs) in both the longitudinal and lateral directions are shown in Table 10. Note that the OIVs and ORAs were within the suggested limits provided in MASH. The calculated THIV, PHD, and ASI values are also shown in Table 10. The results of the occupant risk analysis, as determined from the accelerometer data, are summarized in Figure 46. The recorded data from the accelerometers and the rate transducers are shown graphically in Appendix F.

Table 10. Summary of OIV, ORA, THIV, PHD, and ASI Values, Test No. MGSNB-2

Evaluation Criteria		Transducer		MASH Limits
		EDR-3	DTS	
OIV ft/s (m/s)	Longitudinal	-31.17 (-9.81)	-31.26 (-9.53)	≤ 40 (12.2)
	Lateral	-15.46 (-4.71)	-15.83 (-4.82)	≤40 (12.2)
ORA g's	Longitudinal	-10.47	-10.20	≤ 20.49
	Lateral	-6.03	-6.30	≤ 20.49
THIV ft/s (m/s)		NA	34.65 (10.56)	not required
PHD g's		NA	10.21	not required
ASI		0.97	1.04	not required

6.8 Discussion

The analysis of the test results for test no. MGSNB-2 showed that the non-blocked MGS adequately contained and redirected the 1100C vehicle with controlled lateral displacements of the barrier. There were no detached elements or fragments which showed potential for penetrating the occupant compartment nor presented undue hazard to other traffic. Deformations of, or intrusions into, the occupant compartment that could have caused serious injury did not occur. The test vehicle did not penetrate nor ride over the barrier and remained upright during and after the collision. Vehicle roll, pitch, and yaw angular displacements, as shown in Appendix F, were deemed acceptable because they did not adversely influence occupant risk safety criteria nor cause rollover. After impact, the vehicle exited the barrier at an angle of 19.1 degrees and its trajectory did not violate the bounds of the exit box. Therefore, test no. MGSNB-2 conducted on the non-blocked MGS was deemed acceptable according to the MASH safety performance criteria for test designation no. 3-10.

0.000 sec 0.067 sec 0.167 sec 0.367 sec 0.734 sec

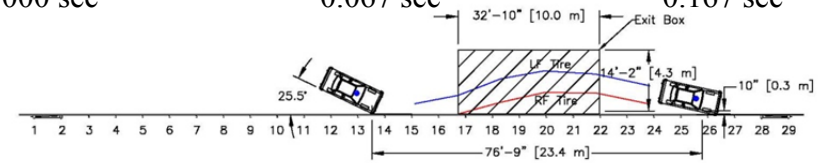

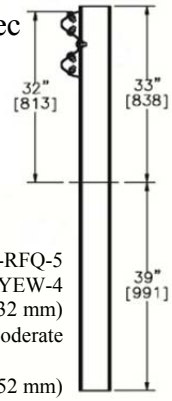

- Test Agency ..... MwRSF
- Test Number MGSNB-2
- Date 6/15/2011
- MASH Test Designation 3-10
- Test Article ..... Non-Blocked MGS
- Total Length ..... 181 ft - 3 in. (55.3 m)
- Key Component – Steel MGS
  - Thickness ..... 12 gauge (2.66 mm)
  - Top Mounting Height ..... 32 in. (813 mm)
- Key Component – Steel Posts
  - Post Type ..... W6x8.5 by 6' (W152x12.6 by 1,829 mm)
  - Post Spacing ..... 75 in. (1,905 mm)
- Key Component – Steel W-beam Backup Plates
  - Thickness ..... 12 gauge (2.66 mm)
  - Length ..... 12 in. (305 mm)
- Soil Type ..... Grading B - AASHTO M 147-65 (1990)
- Vehicle Make /Model ..... 2005 Kia Rio
  - Curb ..... 2,375 lb (1,077 kg)
  - Test Inertial ..... 2,408 lb (1,092 kg)
  - Gross Static ..... 2,578 lb (1,169 kg)
- Impact Conditions
  - Speed ..... 63.0 mph (101.4 km/h)
  - Angle ..... 25.5 deg
  - Impact Location ..... 8 ft - 11¼ in. (2.7 m) upstream of Post No. 15
- Exit Conditions
  - Speed ..... 25.7 mph (41.4 km/h)
  - Angle ..... 19.1 deg
- Exit Box Criterion ..... Pass
- Vehicle Stability ..... Satisfactory
- Vehicle Stopping Distance ..... 76 ft-9 in. (23.4 m) downstream
  10 in. (0.3 M) laterally in front
- Vehicle Damage
  - VDS[13] 01-RFQ-5
  - CDC[14] 01-RYEW-4
  - Maximum Interior Deformation ..... 1¼ in. (32 mm)
- Test Article Damage ..... Moderate
- Test Article Deflections
  - Permanent Set ..... 13 7/8 in. (352 mm)
  - Dynamic ..... 29.1 in. (740 mm)
  - Working Width ..... 34.5 in. (877 mm)
- Maximum Angular Displacements
  - Roll ..... 8.27° < 75°
  - Pitch ..... 3.98 ° < 75°
  - Yaw ..... 14.24°
- Impact Severity (IS) ..... 59.3 kip-ft (80.4 kJ) > 51 kip-ft (69.7 kJ)
- Transducer Data

Evaluation Criteria		Transducer		MASH Limit
		EDR-3	DTS	
OIV ft/s (m/s)	Longitudinal	-31.17 (-9.81)	-31.26 (-9.53)	≤ 40 (12.2)
	Lateral	-15.46 (-4.71)	-15.83 (-4.82)	≤ 40 (12.2)
ORA g's	Longitudinal	-10.47	-10.20	≤ 20.49
	Lateral	-6.03	-6.30	≤ 20.49
THIV – ft/s (m/s)		NA	34.65 (10.56)	not required
PHD – g's		NA	10.21	not required
ASI		0.97	1.04	not required

Figure 46. Summary of Test Results and Sequential Photographs, Test No. MGSNB-2

0.000 sec

0.018 sec

0.058 sec

0.176 sec

0.604 sec

1.300 sec

0.000 sec

0.032 sec

0.104 sec

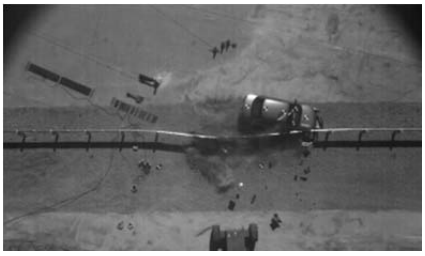
0.404 sec

0.840 sec

1.196 sec

Figure 47. Additional Sequential Photographs, Test No. MGSNB-2

0.000 sec

0.106 sec

0.212 sec

0.336 sec

0.404 sec

0.550 sec

0.000 sec

0.130 sec

0.260 sec

0.390 sec

0.520 sec

0.650 sec

Figure 48. Additional Sequential Photographs, Test No. MGSNB-2

0.000 sec

0.001 sec

0.003 sec

0.008 sec

0.120 sec

0.310 sec

0.600 sec

Figure 49. Additional Sequential Photographs, Test No. MGSNB-2

0.000 sec

0.001 sec

0.003 sec

0.008 sec

0.120 sec

0.310 sec

0.600 sec

0.000 sec

0.070 sec

0.130 sec

0.170 sec

0.300 sec

0.430 sec

Figure 50. Documentary Photographs, Test No. MGSNB-2

0.000 sec

0.070 sec

0.130 sec

0.200 sec

0.300 sec

0.400 sec

0.400 sec

0.000 sec

0.070 sec

0.130 sec

0.200 sec

0.270 sec

0.330 s

Figure 51. Documentary Photographs, Test No. MGSNB-2

Figure 52. Impact Location, Test No. MGSNB-2

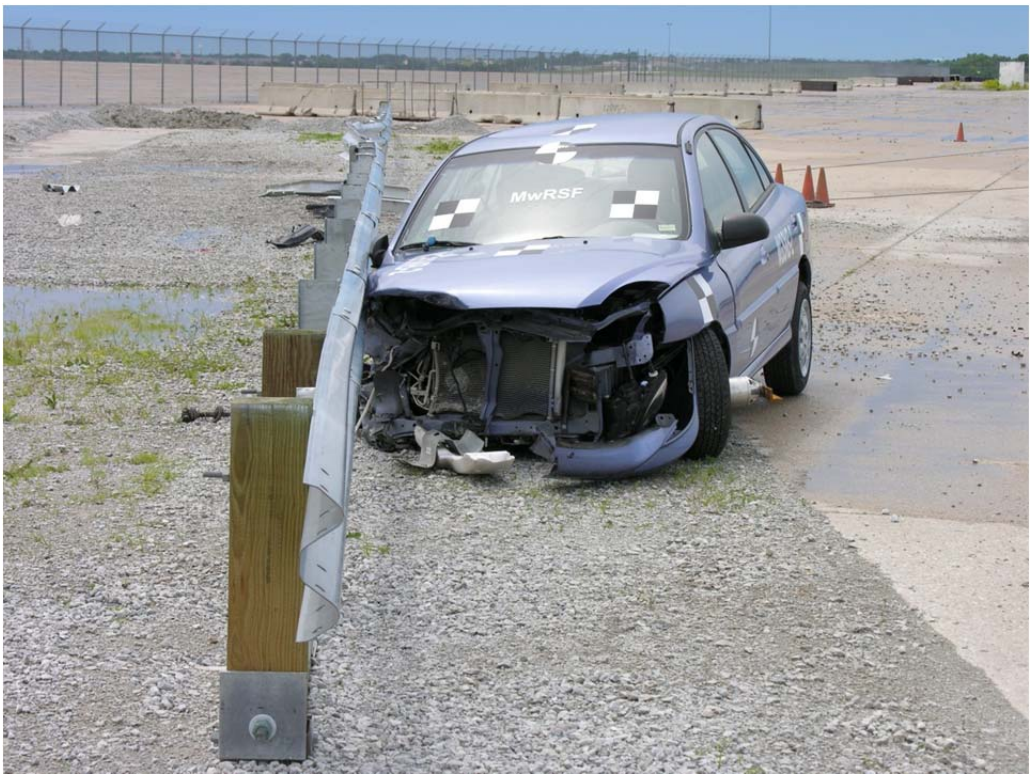

Figure 53. Vehicle Final Position and Trajectory, Test No. MGSNB-2

Figure 54. System Barrier Damage, Test No. MGSNB-2

Figure 55. Guardrail Damage between Posts 13 and 17, Test No. MGSNB-2

Figure 56. Post Damage between Posts 15 and 17, Test No. MGSNB-2

Figure 57. Vehicle Damage, Test No. MGSNB-2

Figure 58. Vehicle Damage, Test No. MGSNB-2

Figure 59. Vehicle Damage, Test No. MGSNB-2

7 COMPARISON BETWEEN BLOCKOUT AND NON-BLOCKOUT MGS TESTING

A comparison between the blocked and non-blocked MGS for both the 2270P truck and 1100C small car is presented in Table 11. Rear-view sequentials for the 2270P and 1100C tests are shown in Figures 60 and 61, respectively. Barrier damage and vehicle damage are shown in Figures 62 and 63, respectively. Longitudinal and lateral change in velocity plots are shown in Figure 64.

Each test successfully passed all criteria set forth by MASH. In fact, all data, photos, and videos showed that none of the conducted tests were in any danger of failing any of the criteria. However, there were some noteworthy differences between the blocked and non-blocked results for the respective vehicles.

For the 2270P vehicle, the non-blocked test when compared to the blocked test had significantly reduced rail deflections, a roll into the barrier as opposed to away from the barrier, fewer posts detached from the rail, and fewer posts snagged by the tire. The ORDs and OIVs were, percentage wise, much higher for the non-blocked system; these differences are also somewhat evident by examining the change in velocity plots. However, the occupant risk measures for both systems were small enough to not cause undue concern. In general, the blocked MGS had higher rail deflections and lower occupant risk numbers.

For the 1100C vehicle, the non-blocked test as compared to the blocked test had significantly reduced rail deflections, a yaw that was essentially stopped due to wheel snag, more posts detached from the rail, and more posts snagged by the tire. The ORDs were much lower for the non-blocked system. But the longitudinal OIV was significantly higher for the non-blocked system due to a large wheel snag early in the non-blocked test. Again, these occupant differences are somewhat evident by examining the change in velocity plots. In general, the blocked MGS

had higher rail deflections and prevented an early wheel snag that essentially controlled the occupant risk measures for the non-blocked system.

Much of the rail deflection differences can probably be attributed to the soil conditions. The more recent non-blocked MGS testing was performed in soil that used a relatively new compaction method, which has been determined to provide a somewhat stiffer soil condition. This, most likely, reduced dynamic deflections. Soil conditions for all tests were well within MASH recommendations.

7.1 Discussion

Based on the full-scale testing results, the main advantages of using a blockout for the MGS are threefold: (1) there is improved stability for both vehicles, lower roll and pitch for the pickup truck partially due to an effective rail height increase during post rotation, and smoother redirection for the small car as seen by the consistent/smooth yaw motion; (2) reduced snag on posts which provides for lower longitudinal velocity change for the small car, smoother yaw motion of the small car, and lower longitudinal decelerations for both vehicles, and (3) reduced occupant risk measures, all are better for the truck, while the small car's longitudinal OIV is much better. Additionally for the small car, the non-blocked test did have lower lateral ORD but that was due to lack of yaw caused by wheel snag, and its lower longitudinal ORD was due to high initial longitudinal decelerations, as seen in the early steep drop of longitudinal change in velocity (see Figure 64). Overall, it was concluded that the blocked system performed better than the non-blocked system.

Table 11. Test Comparisons

Comparison of Results		MASH Test 3-11		MASH Test 3-10	
		Standard MGS	Non-Blocked MGS	Standard MGS	Non-Blocked MGS
Test Number		2214MG-2	MGSNB-1	2214MG-3	MGSNB-2
Reference Number		[2]	[this report]	[3]	[this report]
Vehicle	Designation	2270P	2270P	1100C	1100C
	Test Inertial, lb (kg)	5,000 (2,268)	5,011 (2,273)	2,423 (1,099)	2,407 (1,092)
Impact Conditions	Speed, mph (km/h)	62.8 (101.1)	62.7 (100.9)	60.8 (97.8)	63.0 (101.4)
	Angle, deg	25.5	24.7	25.4	25.5
Exit Conditions	Speed, mph (km/h)	39.6 (63.7)	47.4 (76.3)	30.1 (48.4)	25.7 (41.4)
	Trajectory Angle, deg	13.5	14.4	14.1	19.1
ORD, g's	Longitudinal	8.2	11.5	16.1	10.2
	Lateral	6.9	12.9	8.4	6.3
OIV, ft/s (m/s)	Longitudinal	15.3 (4.7)	17.1 (5.2)	14.8 (4.5)	31.3 (9.5)
	Lateral	15.6 (4.8)	18.7 (5.7)	17.1 (5.2)	15.8 (4.8)
Test Article Deflections, ft (m)	Dynamic	3.6 (1.1)	2.8 (0.9)	3.0 (0.9)	2.4 (0.7)
	Permanent	2.6 (0.8)	1.6 (0.5)	1.7 (0.5)	1.2 (0.4)
	Working Width	4.1 (1.2)	3.6 (1.1)	4.0 (1.2)	2.9 (0.9)
Impact Severity, kip-ft (kN-m)		122 (166)	115 (156)	55 (75)	59 (80)
Max. Occupant Compart. Deformation, in. (mm)		0.8 (19)	1.3 (32)	0.2 (6)	1.3 (32)
Max. Yaw Angle, deg		-46	51	-29	-14
Max. Roll Angle, deg		-5	16	-13	8
Max. Pitch Angle, deg		-2	-5	-6	4
Impact Point		18" upstream post 12	10" upstream post 13	46" upstream post 14	32" upstream post 14
Posts detached from rail during impact		posts 13-16	posts 14-15	posts 15-17	posts 14-17
Posts hit by leading tire (wheel snag)		posts 13-15	posts 14-15	posts 15-16	posts 14-17
Posts pulled out of ground		none	none	none	posts 14 and 16
Leading tire/wheel disengaged		mostly	yes	tire debeaded	yes

Figure 60. Rear View of 2270P Truck Tests – 2214MG-2 (left) and MGSNB-1 (right)

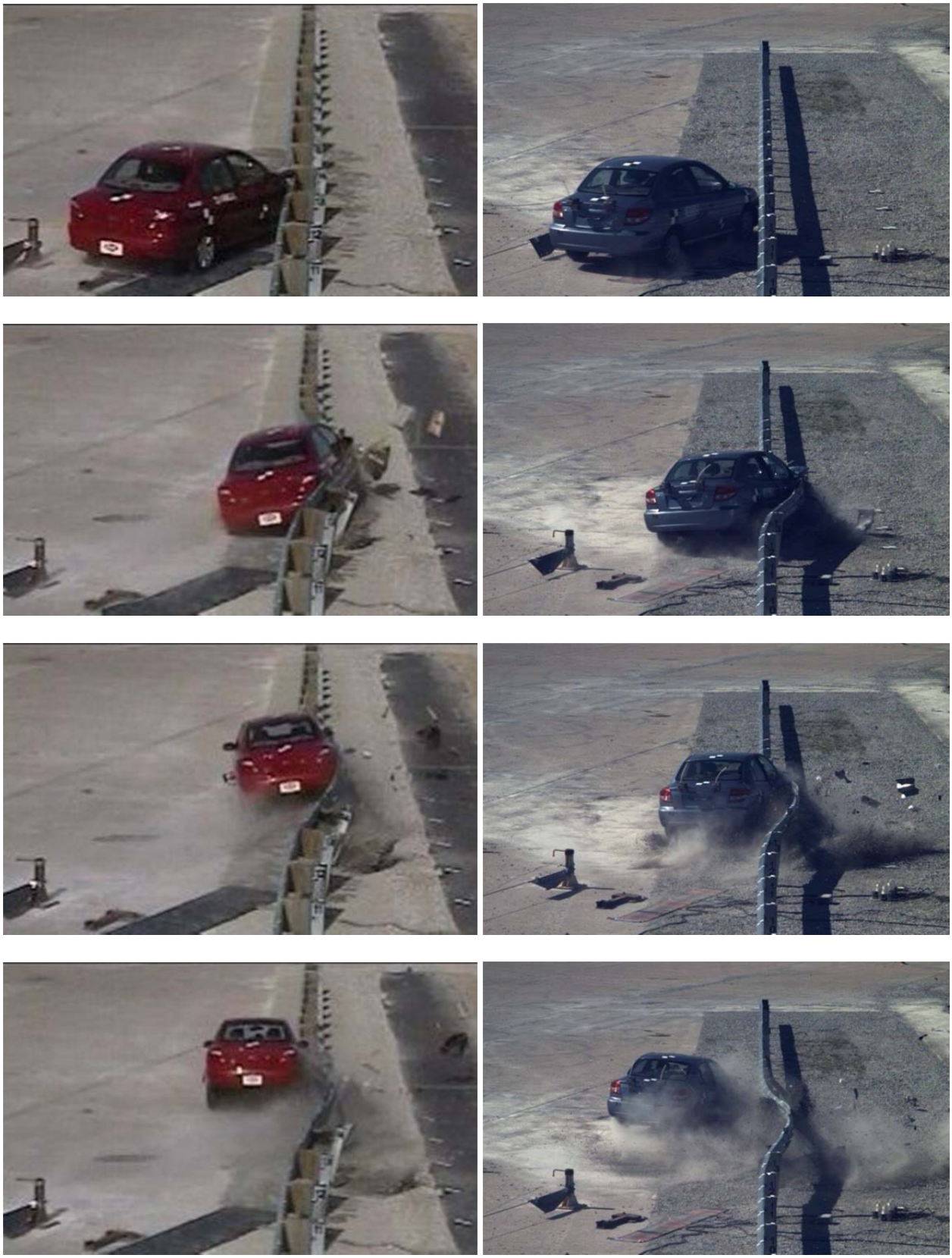

Figure 61. Rear View of 1100C Car Tests – 2214MG-3 (left) and MGSNB-2 (right)

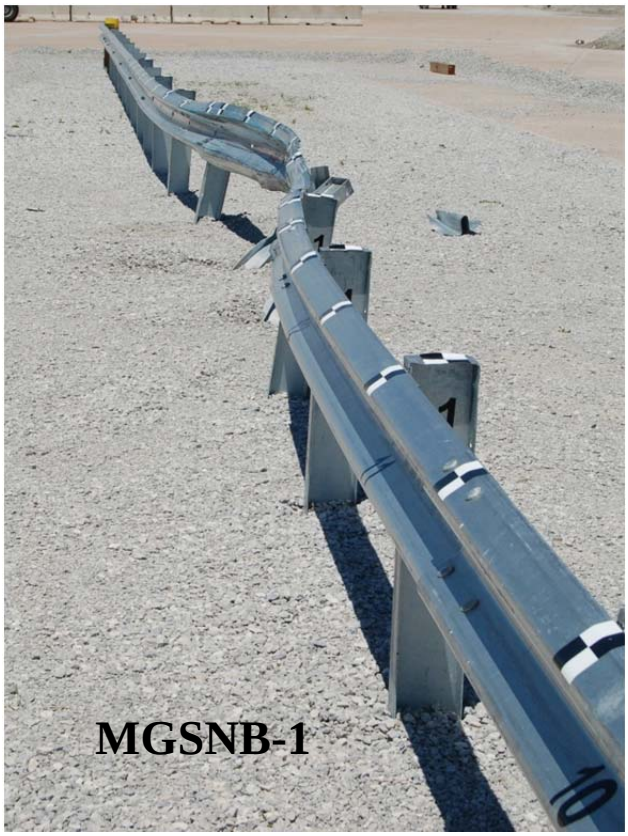

Figure 62. Barrier Damage

Figure 63. Vehicle Damage

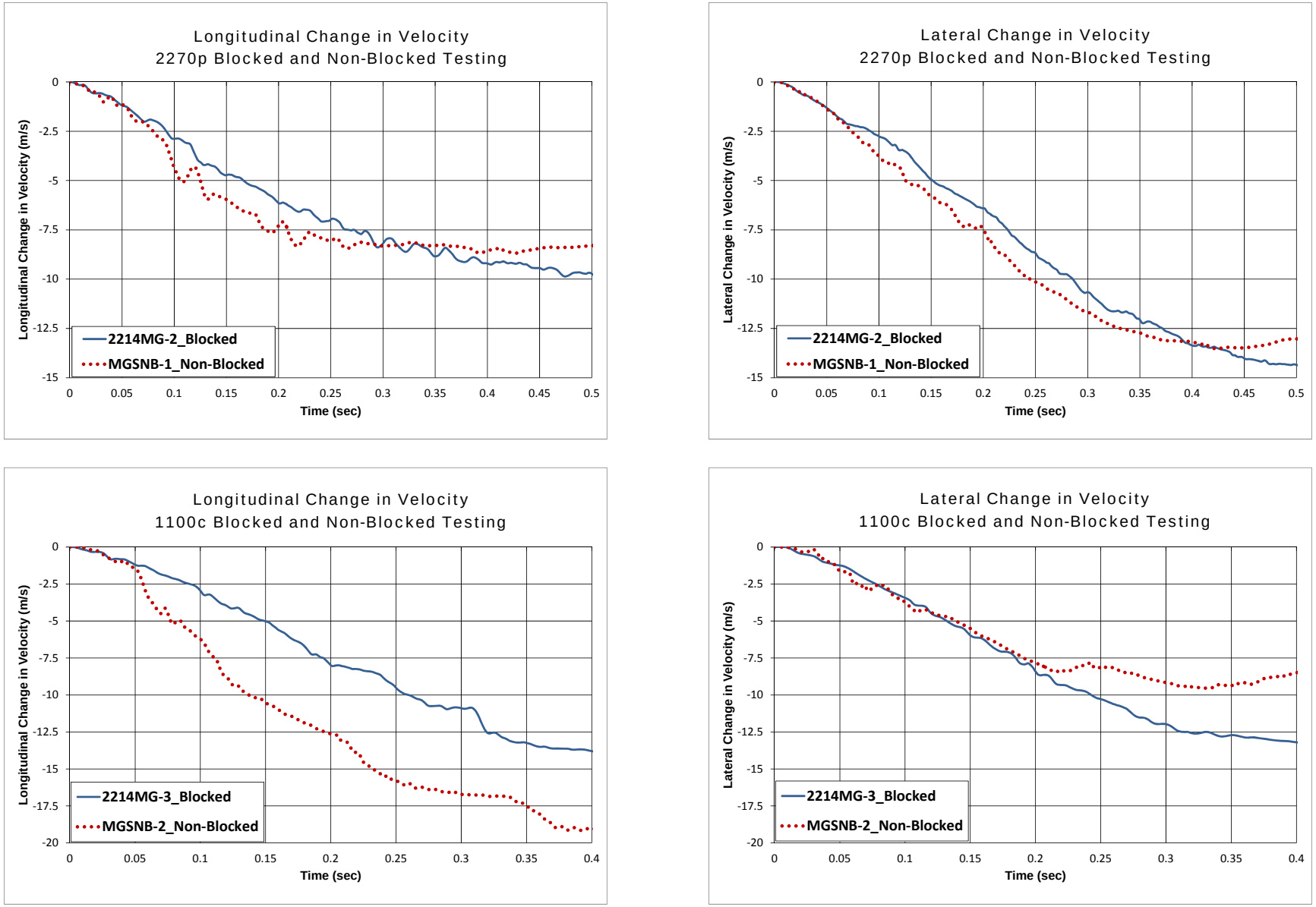

Figure 64. Longitudinal and Lateral Change in Velocity

7.2 Rail-Post Attachment

During test nos. MGSNB-1 and MGSNB-2, the locations of the post bolts were varied within the rail slots in order to investigate rail release away from the posts, as indicated in Figure 1 and shown in Figure 65. Post no. 15 was most likely the worst case scenario if the rail did not release from the post during impact. As a result, the post bolt was located at the downstream end of the rail slot. For both the pickup and small car tests, the guardrail detached from post no. 15 as the bolt head was pulled through the rail. Slight tearing of the rail was evident around the rail bolt hole, but nothing of significance was observed to cause concern for rail rupture. Video analysis also showed that the release of the rail occurred considerably before the post could pull the rail down as the posts rotated in the soil.

Further, for both tests, the post bolt at post no. 16 was initially in the center of the slot. For the truck test, test no. MGSNB-1, post no. 16 rotated in the soil, the rail did not release from the post, and the tire did not snag on the post. Although in the impact zone, release of the rail for this post was not required for good redirection performance. For the small car test, test no. MGSNB-2, the rail slipped along the bolt, causing the bolt to butt up against the end of the slot. The bolt head was then pulled through the rail in a timely manner, this time without any tearing of the rail around the bolt hole.

Similar behavior for rail release under worst case scenarios occurred during testing of the non-blocked MGS for MSE walls. That performance was documented in Reference 14.

In order to prevent the rail from being pulled down as a post rotates in the soil as well as a possible vehicle override of the barrier during an impact event, the rail may need to detach away from the post. Fortunately, it has been shown that the bolt attachment mechanism used for the MGS, the same one used for standard W-beam guardrail systems for several decades, provides for satisfactory rail detachment.

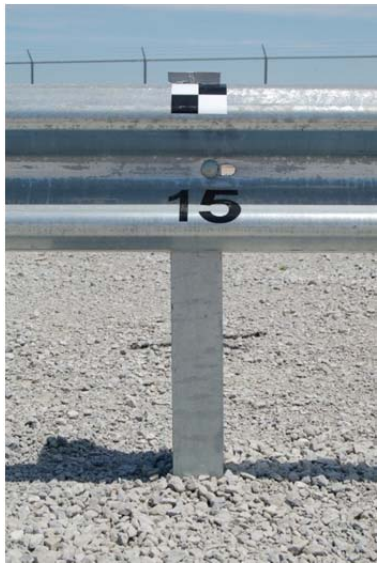

(a) MGSNB-1

(b) MGSNB-2

Figure 65. Bolt Located in Worst Case Location – Pull-Through Behavior Still Occurred

7.3 Importance of the Blockout

The 31-in. (787-mm) mounting height is only one component which contributes to the enhanced performance of the MGS. It is well acknowledged that blockouts serve two primary purposes in the strong-post system. The first, and most important, is causing the rail to rise during an impact. As illustrated in Figure 66, during an impact, the rotation of the posts in conjunction with the blockout causes the rail to rise in the MGS (as well as in Standard W-Beam Guardrail Systems). This is not the case for the 31-in. (787-mm) W-Beam guardrail system without blockouts; where the rail immediately begins to drop as the post rotates in the soil. The deeper blockout on the MGS has significantly improved performance in concert with the increased mounting height.

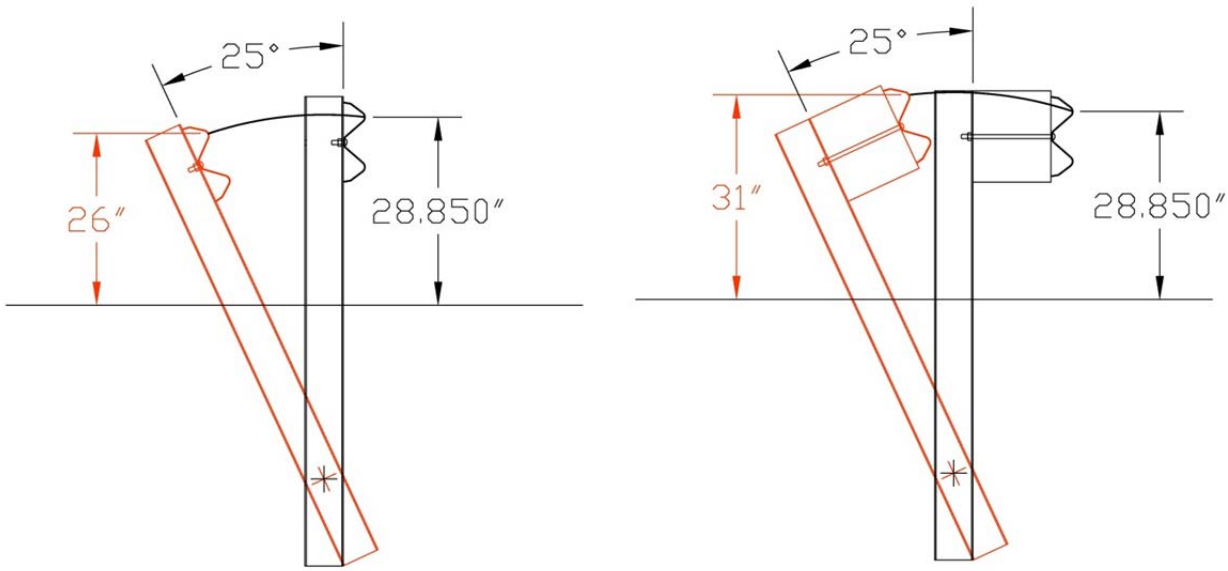

Figure 66. Blockout Holds Rail Up

A comparison of the rotated rails in the schematic above would not lead one to conclude that the non-blocked MGS system is unsafe; since, successful crash testing was performed. Even though the rail is dropping upon post rotation in the non-blocked system, it is not dropping below a critical height during the initial 25 degrees of rotation. In fact, the rail of the 31-in. (787-mm)

height MGS with no blockout after 25 degrees of rotation is approximately at the initial height of standard metric W-beam guardrail system. Post-in-soil rotation of 25 degrees is considered a reasonable amount for absorbing a significant amount of energy of the impacting vehicle. However, the larger blockout depth clearly increases the effective guardrail height.

The second function of the blockout is to keep vehicles away from the posts, thus reducing both the potential for wheel snag and the amount of wheel snag if it were to occur. Although in all of the testing of the MGS and its' variations over the past decade, wheel snag has never proven to be a problem. However, it is prudent to avoid unnecessary impacts of major components. While our surrogate test vehicles may allow the MGS to function without blockouts, many other vehicles on the road may suffer from degraded guardrail performance when interacting with a no-blockout system.

A significant wheel snag occurred at post 14 during test no. MGSNB-2, which did not occur during test no. 2214MG-3, as shown in Figure 67. Initial impact for both tests was just upstream of post no. 13, and each vehicle easily cleared post no. 13 without tire-post overlap. The wheel snag at post no. 14 during test no. MGSNB-1 was the cause for the relatively abrupt change in longitudinal velocity (see Figure 64), as well as the relatively high OIV compared to the blocked test, test no. 2214MG-3 (31.3 ft/s versus 14.8 ft/s). It also helped pull post no. 14 out-of-the-ground as well as helped disengage the tire/wheel during the test.

2214MG-3 – Blocked

MGSNB-2 – Non-Blocked

Figure 67. 1100C Crash Tests at Post No. 14 – Blockout Reduces Wheel Snag

8 SUMMARY, CONCLUSIONS, AND RECOMMENDATIONS

A non-proprietary, non-blocked, strong-post, W-beam guardrail system was developed and crash tested according to MASH. The non-blocked MGS system consisted of a 12-in. (305-mm) W-beam backup plate instead of blockouts at each post location to prevent rail tearing. Two full-scale crash tests were performed according to the TL-3 safety performance criteria, as defined in MASH. Test no. MGSNB-1 (test designation no. 3-11) consisted of a 5,181-lb (2,350-kg) pickup truck impacting the non-blocked MGS at a speed of 62.7 mph (100.9 km/h) and at an angle of 24.7 degrees, resulting in an impact severity of 115.1 kip-ft (156.1 kJ). The vehicle was contained and smoothly redirected. Test no. MGSNB-2 (test designation no. 3-10) consisted of a 2,578-lb (1,169-kg) small car impacting the non-blocked MGS at a speed of 63.0 mph (101.4 km/h) and at an angle of 25.5 degrees, resulting in an impact severity of 63.5 kip-ft (86.1 kJ). The vehicle was contained and smoothly redirected. Thus, the non-blocked MGS was judged to be acceptable according to the safety performance criteria presented in MASH. A summary of the safety performance evaluation is provided in Table 12.

The non-proprietary, non-blocked MGS as well as the proprietary, non-blocked, strong-post W-beam guardrail systems have been developed and successfully crash tested according to the safety performance criteria presented in MASH. Results of test designation nos. 3-10 and 3-11 for each of the 31-in. (787-mm) tall W-beam guardrail systems are summarized in Tables 13 and 14. A summary of the test results and sequential photographs for each test is show in Appendix G. As a result, any of the 31-in. (787-mm) tall W-beam (non-blocked) systems would be a viable option for use in areas where the roadway space required to install a blocked guardrail system is limited. However, the proprietary, non-blocked W-beam systems require the State DOTs to maintain an inventory of specialized components for replacement. This, in turn, may create maintenance issues, especially if multiple proprietary systems are permitted to be

used in one area. Potential improper repairs could also create tort liability issues. Therefore, the non-proprietary, non-blocked MGS would be an alternative to use when roadway space is limited and would also eliminate tort liability concerns.

Previously, wood blockouts used in conjunction with the MGS greatly increases barrier capacity, reduces occupant risk, and improves the vehicle's post-impact trajectory. Thus, the researchers recommend that 12-in. (305-mm) deep wood blockouts, or acceptable alternatives, be used with the MGS when the roadside geometry can accommodate a guardrail system with increased width.

Table 12. Summary of Safety Performance Evaluation Results

Evaluation Factors	Evaluation Criteria	Test No. MGSNB-1	Test No. MGSNB-2
Structural Adequacy	A. Test article should contain and redirect the vehicle or bring the vehicle to a controlled stop; the vehicle should not penetrate, underride, or override the installation although controlled lateral deflection of the test article is acceptable.	S	S
Occupant Risk	D. Detached elements, fragments or other debris from the test article should not penetrate or show potential for penetrating the occupant compartment, or present an undue hazard to other traffic, pedestrians, or personnel in a work zone. Deformations of, or intrusions into, the occupant compartment should not exceed limits set forth in Section 5.3 and Appendix E of MASH.	S	S
	F. The vehicle should remain upright during and after collision. The maximum roll and pitch angles are not to exceed 75 degrees.	S	S
	H. Occupant Impact Velocity (OIV) (see Appendix A, Section A5.3 of MASH for calculation procedure) should satisfy the following limits:	S	S
	Occupant Impact Velocity Limits		
	Component: Longitudinal and Lateral; Preferred: 30 ft/s (9.1 m/s); Maximum: 40 ft/s (12.2 m/s)		
	I. The Occupant Ridedown Acceleration (ORA) (see Appendix A, Section A5.3 of MASH for calculation procedure) should satisfy the following limits:	S	S
	Occupant Ridedown Acceleration Limits		
	Component: Longitudinal and Lateral; Preferred: 15.0 g's; Maximum: 20.49 g's		
MASH Test Designation Number		3-11	3-10
Pass/Fail		Pass	Pass

S – Satisfactory U – Unsatisfactory

Table 13. 31-in. (787-mm) Tall Guardrail Systems Test Designation No. 3-10 Result Comparison

Comparison of Results		Test No. 3-10						
		T-31	GMS	NU-GUARD-31™	Non-Blocked MGS	Standard MGS	Standard MGS	8-in. Block MGS
Test Criteria		NCHRP 350	NCHRP 350	NCHRP 350	MASH	NCHRP 350	MASH	MASH
Reference Number		[8]	[9]	[10]	[this report]	[1]	[3]	[2]
Test Number		220570-4	GMS-2	057073101	MGSNB-2	NPG-1	2214MG-3	420020-5
Blockout depth, in. (mm)		none	none	none	none	12(305)	12(305)	8(203)
Vehicle	Designation	820C	820C	820C	1100C	820C	1100C	1100C
	Test Inertial, lb (kg)	1,819 (825)	1,808 (820)	1,845 (837)	2,408 (1,092)	1,790 (812)	2,423 (1,099)	2,434 (1,104)
Impact Conditions	Speed, mph (km/h)	63.4 (102.1)	66.0 (106.3)	63.5 (102.2)	63.0 (101.4)	63.9 (102.9)	60.8 (97.8)	60.4 (97.2)
	Angle, deg	20.3	18.8	20.3	25.5	20.0	25.4	25.6
ORD, g's	Longitudinal**	-12.9	-8.1	-6.3	-10.2	6.1	16.1	8.8
	Lateral**	7.6	7.1	7.8	-6.3	8.0	8.4	6.8
OIV, ft/s (m/s)	Longitudinal**	21.0 (6.4)	24.9 (7.6)	22.3(6.8)	-31.3(-9.5)	11.5(3.5)	14.8 (4.5)	21.0(6.4)
	Lateral**	19.0 (5.8)	-15.7 (-4.8)	-11.5(-3.5)	-15.8(-4.8)	18.6(5.7)	17.1 (5.2)	17.4(5.3)
Test Article Deflections, ft (m)	Dynamic	1.61 (0.49)	2.17 (0.66)	(0.68)	2.43(0.74)	1.42(.44)	3.00 (0.91)	2.38(0.73)
	Permanent	1.02 (0.31)	1.84 (0.56)	(0.29)	1.16(0.35)	0.78(.24)	1.66 (0.51)	1.58(0.48)
	Working Width	4.40 (1.34)	NA*	NA*	2.88(0.88)	3.36(1.02)	4.03 (1.23)	2.38(0.73)
Impact Severity, kip-ft (kN-m)		29.5 (39.9)	27.4 (37.1)	NA*	59.2(80.3)	28.6(38.8)	55.0 (74.6)	55.4(75.1)
Max. Occupant Compartment Deformation in. (mm)		3.3 (85)	0.0 (0)	(2)	1.3(32)	NA*	0.2 (6)	0.0(0)
Max. Yaw Angle, deg.		-35	-97.1	-164.7	-14.2	106.5	-28.6	49
Max. Roll Angle, deg.		-3	7.8	-11.8	8.3	-8.1	-12.8	-16
Max. Pitch Angle, deg.		-7	-5.2	14.5	4.0	-7.7	-5.8	-11

*NA: Not available

**Depending on sign convention of accelerometer data, magnitudes will be comparable

Table 14. 31-in. (787-mm) Tall Guardrail Systems Test Designation No. 3-11 Result Comparison

Comparison of Results		Test No. 3-11					
		T-31	GMS	NU-GUARD-31™	Non-Blocked MGS	Standard MGS	Standard MGS
Test Criteria		MASH	MASH	NCHRP 350	MASH	NCHRP 350	MASH
Reference Number		[8]	[9]	[10]	[this report]	[4]	[5]
Test Number		220570-2	GMS-1	057073112	MGSNB-1	NPG-4	2214MG-2
Blockout depth, in. (mm)		none	none	none	none	12(305)	12(305)
Vehicle	Designation	2270P	2270P	2270P	2270P	2000P	2270P
	Test Inertial, lb (kg)	5,068 (2,299)	4,844 (2,197)	4,921 (2,232)	5,011 (2,273)	4,378 (1,986)	5,000 (2,268)
Impact Conditions	Speed, mph (km/h)	60.6 (97.6)	60.7 (97.7)	60.9 (98.0)	62.7 (100.9)	60.9 (98.1)	62.8 (101.1)
	Angle, deg	26.8	25.9	24.5	24.7	25.6	25.5
ORD, g's	Longitudinal**	-6.1	-10.7	-6.2	-11.5	9.5	8.2
	Lateral**	7.4	11.5	6.4	-12.9	6.9	6.9
OIV, ft/s (m/s)	Longitudinal**	16.4 (5.0)	16.4 (5.0)	11.2(3.4)	-17.1 (-5.2)	18.3 (5.6)	15.3 (4.7)
	Lateral**	16.7 (5.1)	-10.5 (-3.2)	-13.8(-4.2)	-18.7 (-5.7)	12.8 (3.9)	15.6 (4.8)
Test Article Deflections, ft (m)	Dynamic	3.41 (1.04)	2.92 (0.89)	3.6(1.1)	2.84 (0.87)	3.60 (1.09)	3.65 (1.11)
	Permanent	2.40 (0.73)	1.84 (0.56)	2.6(0.8)	1.61 (0.49)	2.14 (0.65)	2.63 (0.80)
	Working Width	3.67 (1.12)	NA*	NA*	3.60 (1.10)	4.13 (1.26)	4.05 (1.23)
Impact Severity, kip-ft (kN-m)		126.7 (171.8)	113.9 (154.4)	NA*	115.0 (155.9)	101.6 (137.7)	122.3 (165.8)
Max. Occupant Compartment Deformation in. (mm)		0.0 (0)	0.0 (0)	0.03(1)	1.3 (32)	1.25(31.8)	0.8 (19)
Max. Yaw Angle, deg.		42	35.9	-30.7	50.6	31.8	-45.7
Max. Roll Angle, deg.		-14	-12.3	-11.8	15.7	-4.9	-4.8
Max. Pitch Angle, deg.		-22	-6.2	-8.6	-5.3	NA*	-1.8

*NA: Not Available

**Depending on sign convention of accelerometer data, magnitudes will be comparable

9 IMPLEMENTATION GUIDANCE

9.1 Background

As previously noted, the research detailed herein demonstrated that the non-blocked version of the MGS with W6x8.5 (W152x12.6) steel posts performed in an acceptable manner according to test designation no. 3-11 of the MASH impact safety standards. However, several variations of the MGS system have been developed for special applications, which may be more sensitive to the elimination of the blockouts. These special applications would include the MGS long-span system, MGS adjacent to 2:1 fill slopes, MGS on 8:1 approach slopes, MGS adjacent to curb, MGS stiffness transition to approach guardrail transitions, MGS with reduced post spacing, and MGS with various wood posts. Since several MGS variations are available, recommendations regarding the use of a blockout will likely vary depending on the nature and behavior of the special applications listed above. Implementation guidance and/or recommendations regarding the use or omission of blockouts in these special applications are discussed below.

9.2 MGS Long-Span Guardrail

The MGS long-span guardrail system was successfully full-scale crash tested using an unsupported length of 25 ft (7.62 m) and three CRT posts with 12-in. (305-mm) deep blockouts adjacent to each end of the unsupported span. These CRT posts were incorporated into the system in order to mitigate concerns for wheel snag on posts adjacent to the unsupported span when traversing from the unsupported span to the downstream standard guardrail. Adjacent to the CRT posts, the standard MGS utilized 12-in. (305-mm) deep blockouts. The MGS long-span guardrail system was installed with the back of the CRT posts positioned flush with the front face of the culvert headwall. The posts upstream and downstream from the culvert were installed 2 ft (610 mm) away from the slope break point of a 3:1 fill slope.

Occasionally, it may be desirable to attach a non-blocked version of the MGS to the MGS long-span guardrail system as there may be limited roadway width near concrete box culverts. However, there are concerns regarding the removal of the blockouts in the MGS long-span guardrail system. First, the removal of the blockouts on the six CRT posts would increase the likelihood for wheel snag on these posts. In addition, removal of the blockouts adjacent to the unsupported span would cause rail height to decrease immediately upon impact and through subsequent lateral post deflections, which could potentially reduce vehicle containment within the unsupported span. Finally, removal of the blockouts on the CRT posts would effectively move the front face of the guardrail closer to the culvert, thus allowing an impacting vehicle to deflect farther past the exterior edge of the headwall. This increased vehicle and barrier deflection beyond the exterior face of the headwall could increase the potential for vehicle instabilities upon redirection, promote excessive vehicle/wheel snag on the downstream wingwall, allow for excessive vehicle decelerations, and/or reduce the safety performance of the barrier system. Based on these concerns, it is recommended that 12-in. (305-mm) deep blockouts be retained on the six CRT posts.

However, it is believed to be acceptable to allow for the removal of the blockouts away from the steel support posts located adjacent to the CRT posts. The non-blocked version of the MGS performed in an acceptable manner when (1) using the standard post spacing on level terrain and (2) placed at the slope break point of a 3:1 fill slope positioned above a wire-face mechanically-stabilized earth (MSE) wall. Both full-scale crash testing programs were successful under the MASH TL-3 safety performance criteria using both the 1100C and 2270P vehicles. Based on these test results, a non-blocked MGS installed with the back of the posts positioned 2 ft (305 mm) laterally away from the slope break point of a 3:1 fill slope should not cause safety concerns. As such, the non-blocked MGS system would not be expected to significantly degrade

the safety performance of the MGS long-span guardrail system when attached to guardrail beyond the upstream and downstream CRT wood posts. Therefore, it would seem reasonable to allow for the non-blocked MGS to be attached to the MGS long-span guardrail system as shown in Figure 68.

9.3 MGS Adjacent to 2:1 Fill Slopes

Previously, the 31-in. (787-mm) tall Midwest Guardrail System with 9-ft (2.74-m) long W6x8.5 (W152x12.6) steel posts was successfully crash tested under the MASH TL-3 criteria when installed at the slope break point of a 2:1 fill slope using standard post spacing and blockouts. However, similar crash testing was not successful for the minimum recommended MGS mounting height of 27¾ in. (705 mm). As such, the minimum recommended top mounting height is unknown for the MGS adjacent to 2:1 fill slopes.

As noted previously, full-scale crash testing was successful on a non-blocked MGS installed at the slope break point of a 3:1 fill slope positioned on top of an MSE wall. This testing program was performed under the MASH TL-3 safety criteria for both the 1100C and 2270P vehicles.

Using the results from these successful crash testing programs, it is believed that satisfactory performance would also be provided by a non-blocked version of the MGS when installed adjacent to a 2:1 fill slope as shown in Figure 69. Thus, the use of non-blocked MGS guardrail installed adjacent to a 2:1 slope would likely be acceptable. However, it should be noted that no crash tests have been performed on this exact variation and that the minimum recommended top mounting height would likely be affected, similar to the blocked version of the MGS adjacent to 2:1 fill slopes. As such, it is highly recommended that a non-blocked version of the MGS adjacent to 2:1 fill slopes utilize a minimum top mounting height of 31 in. (787 mm) in combination with longer steel posts.

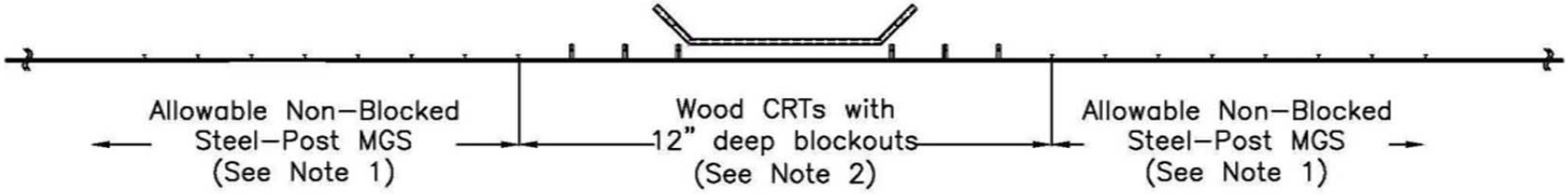

Note: (1) Posts can be installed at the slope break point of a 2:1 or flatter fill slope and a minimum rail height equal to 31 in. (787 mm).

(2) Back of post must be installed on level or mostly level soil grading 2 ft (0.6 m) away from the slope break point of a 3:1 or steeper fill slope. The back of the CRT posts can be flush with the headwall. The headwall cannot extend higher than 2 in. (51mm) above the ground line. The wingwall must match the fill slope.

Figure 68. MGS Long-Span System with Non-Blocked Steel Post MGS

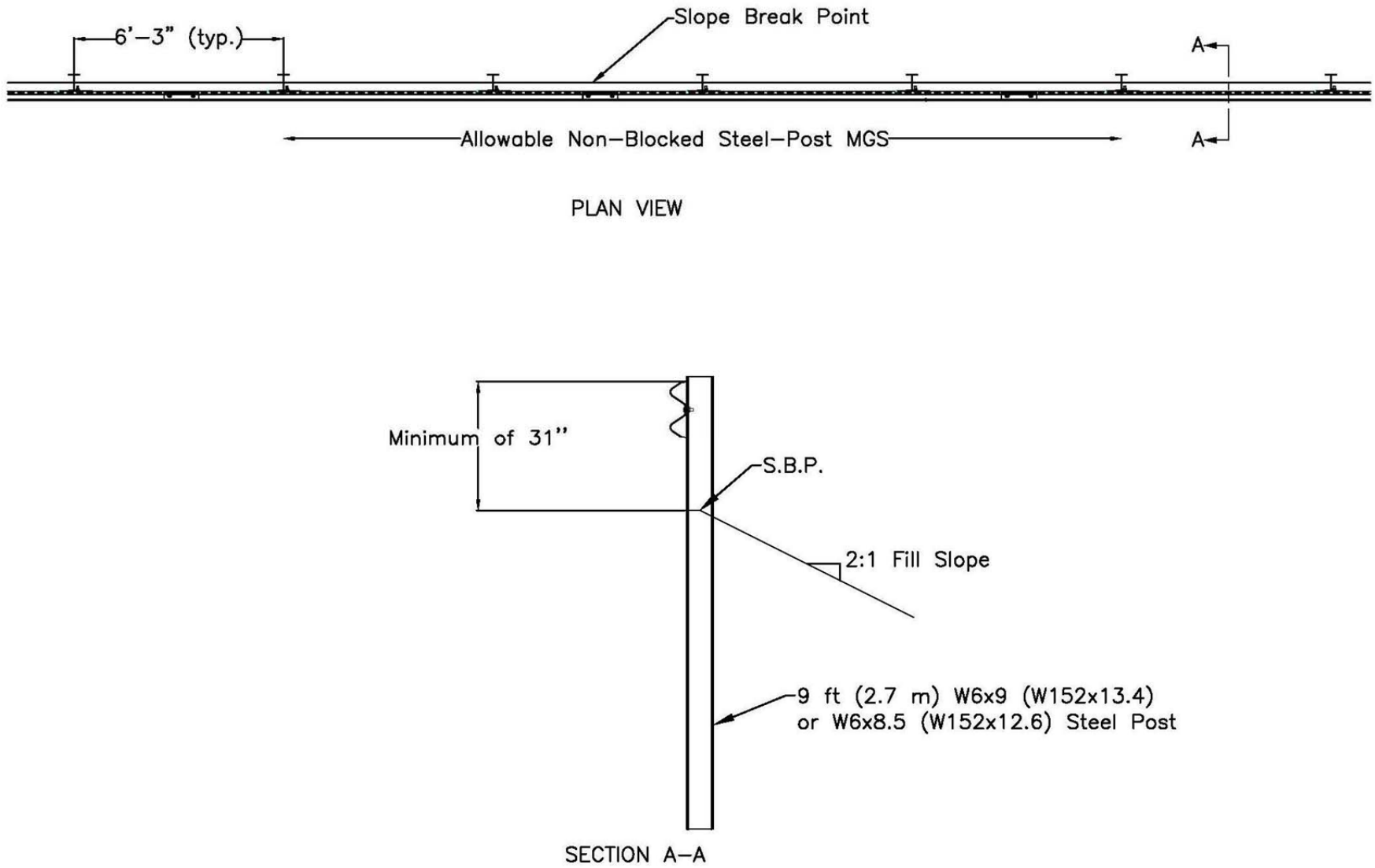

Figure 69. Non-Blocked Steel-Post MGS Adjacent to 2:1 Fill-Slope

9.4 MGS on 8:1 Approach Slopes

Previously, full-scale crash testing was successfully performed on the MGS installed on an 8:1 approach slope with the steel posts positioned 5 ft (1.52 m) laterally behind the slope break point. This testing program was conducted according to the NCHRP Report No. 350 impact safety standards using both an 820C small car and a 2000P pickup truck. From the crash testing program, the mounting height of the blocked MGS relative to the airborne trajectory of the front bumper and impact-side wheels was deemed critical for satisfactorily containing the 2000P pickup truck. Arguably, the test results may have also demonstrated that the 31-in. (787-mm) top railing height greatly contributed to adequate vehicle containment and stable redirection. Historically, blockouts have been shown to improve the safety performance of strong-post, W-beam guardrail systems by providing increased rail height through the initial stages of barrier deflection and reduced wheel to post contact.

MwRSF researchers have concerns that the removal of the blockout may negatively affect the ability for the MGS on 8:1 approach slopes to adequately contain and redirect high center-of-mass vehicles when considering the known dynamic motion of a non-blocked rail section during post rotation. Therefore, a non-blocked MGS on an 8:1 approach slope is not recommended for use without further analysis and crash testing.

9.5 MGS Adjacent to Curb

The MGS was successfully crash tested and evaluated with the front face of the W-beam rail placed 6 in. (152 mm) behind the front face of a 6-in. (152-mm) tall concrete curb according to the NCHRP Report No. 350 TL-3 criteria using a 2000P pickup truck. However, vehicular impacts into guardrail placed adjacent to curbs may contact the barrier face with an increased bumper height and trajectory. As noted above, the mounting height of a blocked MGS can be critical for satisfactorily containing and redirecting a 2000P pickup truck, especially when the

front bumper and impact-side wheels become airborne early in the impact event. Further, it has been noted that a non-blocked guardrail system will allow the top rail height to decrease immediately after post rotation. Therefore, a non-blocked MGS adjacent to a concrete curb is not recommended for use without further analysis and crash testing.

9.6 MGS Stiffness Transition to Approach Guardrail Transitions

Historically, spacer blocks have been used in approach guardrail transition systems to laterally offset the face of the support posts away from the face of the stiffened guardrail sections. This lateral offset has been used to reduce or eliminate severe wheel snag on the closely-spaced, deeply-embedded, transition posts. Severe wheel snag on transition posts can contribute to vehicular instabilities and/or rapid vehicle decelerations. In addition, these transition posts often utilize increased section size in conjunction with thicker gauge rail segments or nested rail. Based on these factors, it is very difficult to anticipate the effect of blockout removal for the transition posts within approach guardrail transitions. Thus, MwRSF researchers do not recommend the removal of the blockouts in the transition region without further analysis and crash testing.

While removal of blockouts is not recommended in common approach guardrail transition systems or within the MGS stiffness transition, it is believed that blockouts can be removed from the posts in locations farther upstream from the stiffness transition. However, it is recommended that a minimum of 25 ft (7.62 m) of standard MGS with spacer blocks be placed adjacent to the new stiffness transition prior to transitioning to any of the non-blocked, 31-in. (787-mm) tall, W-beam guardrail systems, as shown in Figure 70.

Note: (1) See report TRP-03-210-10 for general details for adapting the MGS stiffness transition to various thrie beam approach guardrail transitions. However, it should be noted that not all specific details are reported there in. Instead, additional details should be obtained from the research reports corresponding with the desired approach guardrail transition.

(2) A recommended minimum length of 25 ft (7.62 m) of MGS is to be installed between the upstream end of the asymmetrical W-beam to thrie beam transition section and the interior end of an acceptable, 31-in. (787-mm) tall, non-blocked steel-post MGS.

Figure 70. Use of Non-Blocked Steel-Post MGS with the MGS Stiffness Transition

9.7 MGS with Reduced Post Spacing

A blocked version of the MGS with quarter post spacing was successfully full-scale crash tested and evaluated using a 2000P pickup truck according to the TL-3 criteria found in NCHRP Report No. 350. The noted blockouts were incorporated to serve the same function in the ¼-post spacing design as well as in the standard MGS. As observed in the crash testing of the MGS with ¼-post spacing, the blockouts helped to reduce and/or mitigate wheel snag on the closely-spaced steel posts, thus reducing the potential for vehicle instabilities or rapid vehicle decelerations. In addition, no crash tests have been performed on a non-blocked version of a 31-in. (787-mm) tall, W-beam guardrail system supported by steel posts at a reduced spacing. Based on these facts, it is not recommended to remove the blockouts from the MGS systems with reduced post spacing without further analysis and crash testing.

9.8 MGS with Various Wood Posts

Over the years, MwRSF has crash tested several wood-post MGS systems with blockouts. Round wood posts were manufactured from Ponderosa pine (PP) and Douglas fir (DF). Rectangular posts were fabricated from White pine (WP) and Southern Yellow pine (SYP). The round wood-post MGS was successfully evaluated according to the NCHRP Report No. 350 criteria using 2000P vehicles. Another wood-post MGS was configured with 6-in. x 8-in. x 72-in. (152-mm x 203-mm x 1.83-m) rectangular WP posts and successfully evaluated according to the MASH impact safety standards using a 2270P pickup truck. Finally, MwRSF successfully evaluated the wood-post MGS with 6-in. x 8-in. x 72-in. (152-mm x 203-mm x 1.83-m) rectangular SYP posts according to the MASH impact safety standards using both the 1100C and 2270P vehicles. Similar to the steel-post MGS, these wood-post MGS systems provided acceptable safety performance without concerns for vehicular instabilities, excessive occupant ridedown decelerations, or critical occupant impact velocities.

Based on the similar performance observed for the wood- and steel-post MGS systems with blockouts, there may be a desire for end users to install a non-blocked, wood post MGS. Unfortunately, no crash tests have been performed on non-blocked versions of the wood-post MGS.

Wood and steel guardrail posts can provide slightly different behaviors when loaded through the W-beam rail and about the strong and weak axis of bending. Typical steel guardrail posts may rotate in soil, bend about one of the strong and weak axes near the ground line, or plastically deform from a combination of eccentric loading and/or lateral torsional buckling. Typical wood posts may also rotate in soil or fracture near the ground line. Based on these slight differences in post-soil behavior, there are some concerns that the removal of the blockout from the wood-post MGS may potentially lead to: (1) increased propensity for wheel snag on wood posts; (2) increased vehicle decelerations; and/or (3) greater risk of vehicular instabilities upon redirection. Thus, these outcomes could potentially result in degraded barrier performance. As such, it is not recommended to remove the blockouts from the wood-post MGS without further analysis and crash testing.

10 REFERENCES

1. Polivka, K.A., Faller, R.K., Sicking, D.L., Reid, J.D., Rohde, J.R., Holloway, J.C., Bielenberg, B.W., Kuipers, B.D., *Development of the Midwest Guardrail System (MGS) for Standard and Reduced Post Spacing and in Combination with Curbs*, Final Report to the Midwest States' Regional Pooled Fund Program, MwRSF Research Report No. TRP-03-139-04, Midwest Roadside Safety Facility, University of Nebraska-Lincoln, September 1, 2004.

2. Polivka, K.A., Faller, R.K., Sicking, D.L., Rohde, J.R., Beilenberg, B.W., and Reid, J.D., *Performance Evaluation of the Midwest Guardrail System – Update to NCHRP 350 Test No. 3-11 with 28" C.G. Height (2214MG-2)*, Final Report to the National Cooperative Highway Research Program, MwRSF Research Report No. TRP-03-171-06, Midwest Roadside Safety Facility, University of Nebraska-Lincoln, October 11, 2006.

3. Polivka, K.A., Faller, R.K., Sicking, D.L., Rohde, J.R., Beilenberg, B.W., and Reid, J.D., *Performance Evaluation of the Midwest Guardrail System – Update to NCHRP 350 Test No. 3-10 (2214MG-3)*, Final Report to the National Cooperative Highway Research Program, MwRSF Research Report No. TRP-03-172-06, Midwest Roadside Safety Facility, University of Nebraska-Lincoln, October 11, 2006.

4. Ross, H.E., Sicking, D.L., Zimmer, R.A., and Michie, J.D., *Recommended Procedures for the Safety Performance Evaluation of Highway Features*, National Cooperative Highway Research Program (NCHRP) Report 350, Transportation Research Board, Washington, D.C., 1993.

5. *Manual for Assessing Safety Hardware (MASH)*, American Association of State Highway and Transportation Officials (AASHTO), Washington, D.C., 2009.

6. Baxter, J.R., Federal Highway Administration (FHWA), *Acceptance Letter – NCHRP Report 350 Testing of the Midwest Guardrail System (MGS),* HSA-10/B-133, March 1, 2005.

7. Griffith, M. S., Federal Highway Administration (FHWA), *Acceptance Letter –AASHTO Manual for Assessing Safety Hardware (MASH) Test Level 3 Testing of the Midwest Guardrail System (MGS),* HSST/B-212, December, 2010.

8. Baxter, J.R., Federal Highway Administration (FHWA), *Acceptance Letter – NCHRP Report 350 TL-3 Testing of the T-31 W-beam Guardrail,* HSA-10/B-140, November 3, 2005.

9. Baxter, J.R., Federal Highway Administration (FHWA), *Acceptance Letter – Gregory Mini Spacer (GMS),* HSA-10/B-150, October 27, 2006.

10. Rice, G.E., Federal Highway Administration (FHWA), *Acceptance Letter – Nucor Strong Post W-Beam Guardrail System with no blockouts*, HSSD/B-162, September 11, 2007

11. Hinch, J., Yang, T.L., and Owings, R., *Guidance Systems for Vehicle Testing,* ENSCO, Inc., Springfield, Virginia, 1986.

12. *Center of Gravity Test Code - SAE J874 March 1981,* SAE Handbook Vol. 4, Society of Automotive Engineers, Inc., Warrendale, Pennsylvania, 1986.

13. *Vehicle Damage Scale for Traffic Investigators*, Second Edition, Technical Bulletin No. 1, Traffic Accident Data (TAD) Project, National Safety Council, Chicago, Illinois, 1971.

14. *Collision Deformation Classification – Recommended Practice J224 March 1980*, Handbook Volume 4, Society of Automotive Engineers (SAE), Warrendale, Pennsylvania, 1985.

15. Bligh, R.P., Abu-Odeh, A.Y., and Menges, W.L., *MASH Test 3-10 on 31-inch W-Beam Guardrail With Standard Offset Blocks,* FHWA/TX-11/9-1002-4, Texas Transportation Institute, The Texas A&M University Sytem, March 2011.

16. Society of Automotive Engineers (SAE), *Instrumentation for Impact Test – Part 1 – Electronic Instrumentation*, SAE J211/1 MAR95, New York City, NY, July, 2007.

11 APPENDICES

Appendix A. Material Specifications

Item No.	QTY.	Description Material Specifications and/or Grade	Hardware Guide	Mat Certs
b1	25	W6x8.5 x 6' long [W152x12.6 1829 long] Steel Post ASTM A992 [345 MPa] (W6x9 A36 [248 Mpa])	-	002/100142-1/100144-2
b2	1	6'-3" W-Beam MGS Section 12 gauge [2.7] AASHTO M180	RWMO1a	100142-5
b3	12	12'-6" W-Beam MGS Section 12 gauge [2.7] AASHTO M180	RWM04a	4614
b4	2	12'-6" W-Beam MGS End Section 12 gauge [2.7] AASHTO M180	RWM04a	4614
b5	4	5/8" [15.9] Dia. x 10" [254] long Guardrail Bolt and Nut ASTM A307	FBB03	090453-2/100144-3
b6	137	5/8" [15.9] Dia. x 1 1/2" [38] Guardrail Bolt and Nut ASTM A307	FBB01	100144-1/100144-3
b7	44	5/8" [15.9] Dia. Flat Washer ASTM A153	FWC16a	090453-15
b8	25	W-Beam Backup Plate 12 ga. [2.7] AASHTO M180	RWB01a	4614, 3390
c1	4	BCT Timber Post - MGS Height SYP Grade No. 1 or better	PDF01	10-0282(White)
c2	4	72" [1829] Foundation Tube ASTM A53 Grade B	PTE06	09-0468
c3	2	Strut and Yoke Assembly ASTM A36 Steel Galvanized	-	090453-8
c4	2	5x8x5/8" [127x203x15.9] Anchor Bearing Plate ASTM A36 Steel	FPB01	090453-9
c5	2	BCT Anchor Cable Assembly 3/4" [19] 6x19 IWRC IPS Galvanized Wire Rope	FCA01-02	090453-6/10-0142-3
c6	2	Anchor Bracket Assembly ASTM A36 Steel	FPA01	090453-10
c7	2	2 3/8" [60] O.D. x 6" [152] Long BCT Post Sleeve ASTM A53 Grade B Schedule 40	FMM02	09-0458
c8	4	5/8" [15.9] Dia. x 10" [254] Long Hex Head Bolt and Nut ASTM A307	FBX16a	090543-11/090-0452
c9	16	5/8" [15.9] Dia. x 1 1/2" [38] Long Hex Head Bolt and Nut ASTM A307	FBX16a	090453-1/09-0452
c10	4	7/8" [22.2] Dia. x 7 1/2" [191] Long Hex Head Bolt and Nut ASTM A307	FBX22a	100259-3/100259-1
c11	8	7/8" [22.2] Dia. Flat Washer ASTM A153	FWC22a	100259-2
		Soil		5052010

Figure A-1. Bill of Materials, Test No. MGSNB-1

Item No.	QTY.	Description Material Specifications and/or Grade	Hardware Guide	Mat Certs
b1	25	W6x8.5 x 6' long [W152x12.6 1829 long] Steel Post ASTM A992 [345 MPa] (W6x9 A36 [248 Mpa])	-	002/100142-1/100144-2
b2	1	6'-3" W-Beam MGS Section 12 gauge [2.7] AASHTO M180	RWMO1a	100142-5
b3	12	12'-6" W-Beam MGS Section 12 gauge [2.7] AASHTO M180	RWM04a	4614
b4	2	12'-6" W-Beam MGS End Section 12 gauge [2.7] AASHTO M180	RWM04a	4614
b5	4	5/8" [15.9] Dia. x 10" [254] long Guardrail Bolt and Nut ASTM A307	FBB03	090453-2/100144-3
b6	137	5/8" [15.9] Dia. x 1 1/2" [38] Guardrail Bolt and Nut ASTM A307	FBB01	100144-1/100144-3
b7	44	5/8" [15.9] Dia. Flat Washer ASTM A153	FWC16a	090453-15
b8	25	W-Beam Backup Plate 12 ga. [2.7] AASHTO M180	RWB01a	4614, 3390
c1	4	BCT Timber Post - MGS Height SYP Grade No. 1 or better	PDF01	10-0282(White)
c2	4	72" [1829] Foundation Tube ASTM A53 Grade B	PTE06	09-0468
c3	2	Strut and Yoke Assembly ASTM A36 Steel Galvanized	-	090453-8
c4	2	5x8x5/8" [127x203x15.9] Anchor Bearing Plate ASTM A36 Steel	FPB01	090453-9
c5	2	BCT Anchor Cable Assembly 3/4" [19] 6x19 IWRC IPS Galvanized Wire Rope	FCA01-02	Black Paint
c6	2	Anchor Bracket Assembly ASTM A36 Steel	FPA01	090453-10
c7	2	2 3/8" [60] O.D. x 6" [152] Long BCT Post Sleeve ASTM A53 Grade B Schedule 40	FMM02	09-0458
c8	4	5/8" [15.9] Dia. x 10" [254] Long Hex Head Bolt and Nut ASTM A307	FBX16a	090543-11/090-0452
c9	16	5/8" [15.9] Dia. x 1 1/2" [38] Long Hex Head Bolt and Nut ASTM A307	FBX16a	090453-1/09-0452
c10	4	7/8" [22.2] Dia. x 7 1/2" [191] Long Hex Head Bolt and Nut ASTM A307	FBX22a	100259-3/100259-1
c11	8	7/8" [22.2] Dia. Flat Washer ASTM A153	FWC22a	100259-2
		Soil		5052010

Figure A-2. Bill of Materials, Test No. MGSNB-2

GREGORY HIGHWAY PRODUCTS, INC.
4100 13th St. P.O. Box 80508
Canton, Ohio 44708

Customer: MIDWEST MACHINERY & SUPPLY CO.
2200 Y STREET

LINCOLN, NE. 68501

Test Report
B.O.L. # 34259 DATE SHIPPED: 06/20/08
Customer P.O. 2042
Shipped to: MIDWEST MACHINERY & SUPPLY CO.
Project : STOCK
GHP Order No 2456AB

HT # code	C.	Mn.	P.	S.	Si.	Tensile	Yield	Elong.	Quantity	Class	Type	Description
G802202	0.14	0.74	0.014	0.027	0.21	78300	60600	22.5	750	A		6IN WF AT 8.5 X 6FT 0IN GR POST
G802217	0.12	0.8	0.014	0.029	0.26	76400	58300	26.6		A		6IN WF AT 8.5 X 6FT 0IN GR POST
G802213	0.13	0.7	0.014	0.03	0.23	76700	60000	24.6		A		6IN WF AT 8.5 X 6FT 0IN GR POST
G802203	0.13	0.74	0.014	0.027	0.2	76600	59600	22.9		A		6IN WF AT 8.5 X 6FT 0IN GR POST
13715	0.14	0.81	0.026	0.031	0.23	71000	49000	24.7		A		6IN WF AT 8.5 X 6FT 0IN GR POST
26267	0.14	0.71	0.026	0.027	0.17	69000	49000	24.4		A		6IN WF AT 8.5 X 6FT 0IN GR POST
56632	0.09	0.83	0.011	0.028	0.2	78790	64860	24		A		6IN WF AT 8.5 X 6FT 0IN GR POST
56F33	0.09	0.79	0.01	0.031	0.18	79480	66600	23		A		6IN WF AT 8.5 X 6FT 0IN GR POST
56632	0.09	0.83	0.011	0.028	0.2	78790	64860	24		A		6IN WF AT 8.5 X 6FT 0IN GR POST
25105	0.12	0.66	0.012	0.02	0.22	65000	45000	23.5		A		6IN WF AT 8.5 X 6FT 0IN GR POST
44330	0.12	0.69	0.012	0.026	0.23	63000	44000	20.4		A		6IN WF AT 8.5 X 6FT 0IN GR POST
44261	0.16	0.61	0.01	0.025	0.19	68000	45000	27.2		A		6IN WF AT 8.5 X 6FT 0IN GR POST

Bolts comply with ASTM A-307 specifications and are galvanized in accordance with ASTM A-153, unless otherwise stated.
Nuts comply with ASTM A-563 specifications and are galvanized in accordance with ASTM A-153, unless otherwise stated.
All other galvanized material conforms with ASTM-123 & ASTM-525
All steel used in the manufacture is of Domestic Origin, "Made and Melted in the United States"
All Guardrail and Terminal Sections meets AASHTO M-180, All structural steel meets AASHTO M-183 & M270
All Bolts and Nuts are of Domestic Origin
All material fabricated in accordance with Nebraska Department of Transportation

By: Andrew Artar
Andrew Artar
Vice President of Sales and Marketing
Gregory Highway Products, Inc.

STATE OF OHIO: COUNTY OF STARK
Sworn to and subscribed before me, a Notary Public, by
Andrew Artar this 23th day of June, 2008.
Cynthia K Crawford
Notary Public, State of Ohio

NOTARIAL SEAL STATE OF OHIO
CYNTHIA K. CRAWFORD
Notary Public, State of Ohio
My Commission Expires 08-16-2012

Figure A-3. W6x8 [W152x12.6] Steel Post Material Specifications, Test Nos. MGSNB-1 and MGSNB-2

Certified Analysis

Trinity Highway Products , LLC
425 E. O'Connor
Lima, OH
Customer: MIDWEST MACH.& SUPPLY CO.
P. O. BOX 81097

LINCOLN, NE 68501-1097
Project: RESALE

Order Number: 1114174
Customer PO: 2213
BOL Number: 51169
Document #: 1
Shipped To: NE
Use State: NE

As of: 9/16/09

Qty	Part #	Description	Spec	CL	TY	Heat Code/ Heat #	Yield	TS	Elg	C	Mn	P	S	Si	Cu	Cb	Cr	Vn	ACW
750	545G	6'0 POST/DB:DDR	A-36			J86489	50,565	68,830	26.1	0.090	0.950	0.010	0.040	0.200	0.290	0.00	0.160	0.003	4
50	14662G	6'6 POST/8.5#/DB:DDR	NB A-36			J86489	50,565	68,830	26.1	0.090	0.950	0.010	0.040	0.200	0.290	0.00	0.160	0.003	4

Upon delivery, all materials subject to Trinity Highway Products , LLC Storage Stain Policy No. LG-002.

ALL STEEL USED WAS MELTED AND MANUFACTURED IN USA AND COMPLIES WITH THE BUY AMERICA ACT.
ALL GUARDRAIL MEETS AASHTO M-180, ALL STRUCTURAL STEEL MEETS ASTM A36
ALL GALVANIZED MATERIAL CONFORMS WITH ASTM-123, UNLESS OTHERWISE STATED.
BOLTS COMPLY WITH ASTM A-307 SPECIFICATIONS AND ARE GALVANIZED IN ACCORDANCE WITH ASTM A-153, UNLESS OTHERWISE STATED.
NUTS COMPLY WITH ASTM A-563 SPECIFICATIONS AND ARE GALVANIZED IN ACCORDANCE WITH ASTM A-153, UNLESS OTHERWISE STATED.

3/4" DIA CABLE 6X19 ZINC COATED SWAGED END AISI C-1035 STEEL ANNEALED STUD 1" DIA ASTM 449 AASHTO M30, TYPE II BREAKING STRENGTH – 49100 LB

State of Ohio, County of Allen. Sworn and subscribed before me this 16th day of September, 2009
Notary Public:
Commission Expires 1/13/2012

Trinity Highway Products , LLC
Certified By:
Quality Assurance

Figure A-4. W6x9 [W152x13.4] Steel Post Material Specifications, Test Nos. MGSNB-1 and MGSNB-2

Trinity Highw roducts , LLC
25·9 N.E. 28th St.
Ft Worth, TX

Customer: MIDWEST MACH.& SUPPLY CO.
P. O. BOX 81097

LINCOLN, NE 68501-1097

Sales Order: 1112249
Customer PO: 2188
BOL # 28104
Document # 1

Print Date: 8/4/09
Project: RESALE
Shipped To: NE
Use State: KS

Trinity Highway Products, LLC
Certificate Of Compliance For Trinity Industries, Inc.
NCHRP Report 350 Compliant

Pieces	Description
X 40	12/6'3/S

Upon delivery, all materials subject to Trinity Highway Products , LLC Storage Stain Policy No. LG-002.

ALL STEEL USED WAS MELTED AND MANUFACTURED IN USA AND COMPLIES WITH THE BUY AMERICA ACT
ALL GUARDRAIL MEETS AASHTO M-180, ALL STRUCTURAL STEEL MEETS ASTM A36
ALL OTHER GALVANIZED MATERIAL CONFORMS WITH ASTM-123.
BOLTS COMPLY WITH ASTM A-307 SPECIFICATIONS AND ARE GALVANIZED IN ACCORDANCE WITH ASTM A-153, UNLESS OTHERWISE STATED.
NUTS COMPLY WITH ASTM A-563 SPECIFICATIONS AND ARE GALVANIZED IN ACCORDANCE WITH ASTM A-153, UNLESS OTHERWISE STATED.
3/4" DIA CABLE 6X19 ZINC COATED SWAGED END AISI C-1035 STEEL ANNEALED STUD 1" DIA ASTM 449 AASHTO M30, TYPE II BREAKING STRENGTH – 49100 LB

State of Texas, County of T[illegible] Sworn and [illegible] before me this 4th day of August, 2009

Notary Public, State of Texas
My Commission Expires
July 13, 2013

Notary Public:
Commission Expires: / /

Trinity Highway Products, LLC
Certified By: Stefanie Ingle
Quality Assurance

1 of 1

Figure A-5. 6-ft 3-in. (1,905-mm) Long W-Beam MGS Section Material Specifications, Test Nos. MGSNB-1 and MGSNB-2

GREGORY HIGHWAY PRODUCTS, INC.
4100 13th St. P.O. Box 80508
Canton, Ohio 44708

MAY 14 2009

Customer: UNIVERSITY OF NEBRASKA-LINCOLN
401 CANFIELD ADMIN BLDG
P O BOX 880439
LINCOLN, NE. 68588-0439

Test Report
B.O.L. # 39963 DATE SHIPPED: 05/07/09
Customer P.O. 4500204081/ 04/06/2009
Shipped to: UNIVERSITY OF NEBRASKA-LINCOLN
Project : TEST PANELS
GHP Order No 105271

HT # code	C.	Mn.	P.	S.	Si.	Tensile	Yield	Elong.	Quantity	Class	Type	Description
4614	0.21	0.84	0.011	0.003	0.03	89432	67993	19.8	160	A	2	12GA 12FT6IN/3FT1 1/2IN WB T2

Bolts comply with ASTM A-307 specifications and are galvanized in accordance with ASTM A-153, unless otherwise stated.
Nuts comply with ASTM A-563 specifications and are galvanized in accordance with ASTM A-153, unless otherwise stated.
All other galvanized material conforms with ASTM-123 & ASTM-525
All steel used in the manufacture is of Domestic Origin, "Made and Melted in the United States"
All Guardrail and Terminal Sections meets AASHTO M-180, All structural steel meets AASHTO M-183 & M270
All Bolts and Nuts are of Domestic Origin
All material fabricated in accordance with Nebraska Department of Transportation
All controlled oxidized corrosion resistant Guardrail and terminal sections meet ASTM A606, Type 4.

By: Andrew Artar
Andrew Artar
Vice President of Sales & Marketing
Gregory Highway Products, Inc.

STATE OF OHIO: COUNTY OF STARK
Sworn to and subscribed before me, a Notary Public, by
Andrew Artar this 8th day of May, 2009.
Cynthia K Crawford
Notary Public, State of Ohio

NOTARIAL SEAL STATE OF OHIO

CYNTHIA K. CRAWFORD
Notary Public, State of Ohio
My Commission Expires 09-16-2012

Figure A-6. 12-ft 6-in. (3.8 m) Long W-Beam MGS Section and End Section Material Specifications, Test Nos. MGSNB-1 and MGSNB-2

06/04/2009 16:36 402-761-3288 MIDWEST MACHINERY

MID WEST
FABRICATING CO.

CERTIFICATE OF COMPLIANCE

WE CERTIFY THAT ALL BOLTS ARE MADE AND MANUFACTURED IN THE USA.

TO: TRINITY INDUSTRIES INC.
Plant #55
425 E. O'Connor 419-222-7398
Lima,Ohio 45801
SHIP DATE:.11/6/2008
MANUFACTURER: MID WEST FABRICATING CO.
ASTM: A307A
GALVANIZERS: Columbus/Piolt TO A-153 CLASS C

QTY	PART NO.	HEAT NO.	LOT NO.	P.O.NO.
3,524	5/8 X 10-6"	7261134	85204	126266BR80
1,076	5/8 X 10-6"	7261134	85204	126266BR78
8,900	5/8 X 10-6"	7261134	85204	126266BR74
4,500	5/8 X 10-6"	7261611	85217	126266BR74
2,550	5/8 X 10W-6"	7261286	85180	126266BR84
4,500	5/8 X 14-6"	7366618	85199	126266BR68
6,000	5/8 X 18-6"	7366618	85157	126266BR84
1,536	5/8 X 18-6"	7366618	85157	126266BR74
130	5/8 X 18-6"	7366618	85156	126266BR74
2,964	5/8 X 18-6"	7366618	85149	126266BR74
4,370	5/8 X 18-6"	7261611	85146	126266BR74
400	5/8 X 3.5"	5978691	85016	126266BR82

Signature D. Smith
TITLE: QUALITY CONTROL
DATE: 11/6/2008

313 North Johns Street • Amanda, Ohio 43102 • 740/969-4411 • FAX: 740/969-4433

Figure A-7. 10-in. (254-mm) Long Guardrail Bolt Material Specifications, Test Nos. MGSNB-1 and MGSNB-2

06/04/2009 16:36 402-761-3288 MIDWEST MACHINERY PAGE 06/02

08/14/2008 12:38 KREMER STEEL → 17486814433 NO.057 P02

#16

Republic ENGINEERED PRODUCTS

CERTIFICATE OF TESTS REPUBLIC ENGINEERED PRODUCTS August 5, 2008
PAGE 1

P 1

PURCHASE ORD: 17433
ART NUMBER: 62764
ORDER NUMBER: 1390624 - 01
BAT: 7261811

PURCHASE ORDER DATE: 6/30/2008
ACCOUNT NUMBER: 8603-2943-01
SCHEDULE: 5135-85
REVISION: 1

CHARGE ADDRESS

KREMER STEEL COMPANY LLC
1330 W 25TH AVE
MELROSE PARK, IL 60160

SHIP TO

KREMER STEEL COMPANY LLC
BRIN
C/O MID WEST FABRICATING
313 JOHNS ST
ARANDA, OH 43102

MATERIAL DESCRIPTION

DT ROLLED STEEL COILS CARBON AISI-1015 SI, KILLED FINE GRAIN COLD WORKING QUALITY
IZE: EDS .5730 DIAM X COIL
EDS 14.6812MM DIAM X COIL

LADLE CHEMISTRY %

C	MN	P	S	SI	CU	NI	CR
0.15	0.52	0.009	0.003	0.25	0.04	0.06	0.10
V	MO	SN	AL	CE	B		
0.002	0.04	0.002	0.042	0.001	0.0000		

CALCULATED TESTS

EDUCTION RATIO 137.2 TO 1

UTENITIC GRAIN SIZE 5 OR FINER BASED ON A TOTAL ALUMINUM CONTENT EQUAL TO OR GREATER THAN .020% PER
STM A29.

SEMI - FINISHED RESULTS

FINISHED SIZE RESULTS

NOTES

EMICAL ANALYSIS CONFORMS TO APPLICABLE SPECS: ASTM E415, LEL10129, LEL10138, ASTM E1019,
EL10139, LEL10114, AND ASTM E1086, LEL10184, LEL10188.

UBLIC ENGINEERED PRODUCTS HEREBY CERTIFY THAT THE MATERIAL LISTED HEREIN HAS BEEN INSPECTED AND
STED IN ACCORDANCE WITH THE METHODS PRESCRIBED IN THE GOVERNING SPECIFICATIONS AND BASED UPON THE
SULTS OF SUCH INSPECTION AND TESTING HAS BEEN APPROVED FOR CONFORMANCE TO THE SPECIFICATIONS.

RTIFICATE OF TESTS SHALL NOT BE REPRODUCED EXCEPT IN FULL.

D TESTING HAS BEEN PERFORMED USING THE CURRENT REVISION OF THE TESTING SPECIFICATIONS.

TERING OF FALSE, FICTITIOUS OR FRAUDULENT STATEMENTS OR ENTRIES ON THIS DOCUMENT MAY BE PUNISHED
A FELONY UNDER FEDERAL STATUTE TITLE 18 CHAPTER 47.

E MATERIAL HAS NOT EXPOSED TO MERCURY OR ANY METAL ALLOY THAT IS LIQUID AT AMBIENT TEMPERATURE
RING PROCESSING OR WHILE IN OUR POSSESSION.

WELD OR WELD REPAIR WAS PERFORMED ON THIS MATERIAL.

E RESULT REPORTED RELATE ONLY TO THE ITEMS TESTED

SOURCE INFORMATION

LT SOURCE: LORAIN BILLET MELT COUNTRY: U.S.A EOT ROLL SOURCE: LORAIN P/10. U.S.A
LT METHOD: BOF BILLET RED. RATIO: 137.3

END OF DATA CC END OF DATA

K SHIP TO 1 COPY ATTENTION MARK STEPANZ 12486699885
OF SHIPMENT 1 COPY PRINTED AT SHIPPING AREA
DE 1 COPY

I. A. SHELIGA
SHOP TECH. SERVICES

BY GARRY K. BARTLINE

Figure A-8. 10-in (254-mm) Long Guardrail Bolt Material Specifications (cont.), Test Nos. MGSNB-1 and MGSNB-2

06/04/2009 16:36 402-761-3288 MIDWEST MACHINERY

Mid West Fabricating Company
Rockmill Division
3115 West Fair Avenue
Lancaster, OH 43130
(740) 681-4411

Lab Test Report

Date: 24-Sep-08
Part Number: 10-6
Description: 10" POST BOLT W/6" THRD
Lot Number: 85217
Customer: Trinity
Test Type: Permiscope
Heat Number: 7261611
Processor: Columbus
Testing Standard: ASTM=A153-A153/98
Requirement: 1.77 Mil
Sample Qty: 20
Disposition: Ship
Ship ID: X99

Data Results

Sample 1:	2.65
Sample 2:	2.84
Sample 3:	2.63
Sample 4:	2.95
Sample 5:	3.28
Sample 6:	2.18
Sample 7:	3.12
Sample 8:	2.64
Sample 9:	3.50
Sample 10:	3.71
Sample 11:	2.16
Sample 12:	2.73
Sample 13:	3.01
Sample 14:	2.70
Sample 15:	2.80
Sample 16:	3.26
Sample 17:	3.12
Sample 18:	2.39
Sample 19:	2.44
Sample 20:	2.58
Average:	2.84

✓ Conformance

Non-Conformance

Performed By: D.Smith

This report shall not be reproduced, except in full, without the written approval of Mid West Fabricating Company's Quality Department.

Figure A-9. 10-in (254-mm) Long Guardrail Bolt Material Specifications (cont.), Test Nos. MGSNB-1 and MGSNB-2

06/04/2009 16:36 402-751-3288 MIDWEST MACHINERY PAGE 11/54

Mid West Fabricating Company
Rockmill Division
3115 West Fair Avenue
Lancaster, OH 43130
(740) 681-4411

Lab Test Report

Date:	24-Sep-08
Part Number:	10-6
Description:	10" POST BOLT W/6" THRD
Lot Number:	85217
Customer:	Trinity
Test Type:	Permiscope
Heat Number:	7261611
Procesor:	Columbus
Testing Standard:	ASTM-A153-A153/98
Requirement:	1.77 Mil
Sample Qty:	20
Disposition:	Ship
Ship ID:	X99

Data Results

Sample 1:	2.15
Sample 2:	2.82
Sample 3:	3.38
Sample 4:	2.16
Sample 5:	2.88
Sample 6:	2.17
Sample 7:	2.54
Sample 8:	2.01
Sample 9:	2.17
Sample 10:	2.47
Sample 11:	3.10
Sample 12:	2.40
Sample 13:	4.00
Sample 14:	2.79
Sample 15:	3.50
Sample 16:	3.25
Sample 17:	3.18
Sample 18:	2.73
Sample 19:	2.82
Sample 20:	3.22
Average:	2.79

✓ Conformance

Non-Conformance

Performed By: D.Smith

This report shall not be reproduced, except in full, without the written approval of Mid West Fabricating Company's Quality Department.

Figure A-10. 10-in (254-mm) Long Guardrail Bolt Material Specifications (cont.), Test Nos. MGSNB-1 and MGSNB-2

06/04/2009 16:36 402-761-3288 MIDWEST MACHINERY

Mid West Fabricating Company
Rockmill Division
3115 West Fair Avenue
Lancaster, OH 43130
(740) 681-4411

Lab Test Report

Date:	24-Sep-08
Part Number:	10-6
Description:	10" POST BOLT W/6" THRD
Lot Number:	85217
Customer:	Trinity
Test Type:	Permiscope
Heat Number:	7261611
Processor:	Columbus
Testing Standard:	ASTM=A153-A153/98
Requirement:	1.77 Mil
Sample Qty:	10
Disposition:	Ship
Ship ID:	X99

Data Results

Sample 1:	2.19
Sample 2:	2.68
Sample 3:	2.29
Sample 4:	1.99
Sample 5:	3.09
Sample 6:	3.26
Sample 7:	2.39
Sample 8:	3.12
Sample 9:	3.72
Sample 10:	2.82
Sample 11:	0.00
Sample 12:	0.00
Sample 13:	0.00
Sample 14:	0.00
Sample 15:	0.00
Sample 16:	0.00
Sample 17:	0.00
Sample 18:	0.00
Sample 19:	0.00
Sample 20:	0.00
Average:	2.76

✓ Conformance

Non-Conformance

Performed By: D.Smith

This report shall not be reproduced, except in full, without the written approval of Mid West Fabricating Company's Quality Department.

Figure A-11. 10-in (254-mm) Long Guardrail Bolt Material Specifications (cont.), Test Nos. MGSNB-1 and MGSNB-2

06/04/2009 16:36 402-761-3288 MIDWEST MACHINERY

Mid West Fabricating Company
Rockmill Division
3115 West Fair Avenue
Lancaster, OH 43130
(740) 681-4411

Lab Test Report

Date:	24-Sep-08
Part Number:	10-6
Description:	10" POST BOLT W/6" THRD
Lot Number:	85217
Customer:	Trinity
Test Type:	Rockwell
Heat Number:	7261611
Processor:	Columbus
Testing Standard:	ASTM-E18-98
Requirement:	69-100 "B"
Sample Qty:	5
Disposition:	Scrap
Ship ID:	

Data Results

Sample 1:	85.20
Sample 2:	86.80
Sample 3:	86.40
Sample 4:	85.00
Sample 5:	85.60
Sample 6:	0.00
Sample 7:	0.00
Sample 8:	0.00
Sample 9:	0.00
Sample 10:	0.00
Sample 11:	0.00
Sample 12:	0.00
Sample 13:	0.00
Sample 14:	0.00
Sample 15:	0.00
Sample 16:	0.00
Sample 17:	0.00
Sample 18:	0.00
Sample 19:	0.00
Sample 20:	0.00
Average:	85.80

✓ Conformance

Non-Conformance

Performed By: D.Smith

This report shall not be reproduced, except in full, without the written approval of Mid West Fabricating Company's Quality Department.

Figure A-12. 10-in (254-mm) Long Guardrail Bolt Material Specifications (cont.), Test Nos. MGSNB-1 and MGSNB-2

06/04/2009 16:36 402-761-3288 MIDWEST MACHINERY

Mid West Fabricating Company
Rockmill Division
3115 West Fair Avenue
Lancaster, OH 43130
(740) 681-4411

Lab Test Report

Date:	24-Sep-08
Part Number:	10-6
Description:	10" POST BOLT W/6" THRD
Lot Number:	85217
Customer:	Trinity
Test Type:	Rockwell
Heat Number:	7261611
Processor:	Columbus
Testing Standard:	ASTM-F606-95B
Requirement:	13,590 lbf
Sample Qty:	5
Disposition:	Scrap
Ship ID:	

Data Results

Sample 1:	16,850.00
Sample 2:	17,370.00
Sample 3:	17,190.00
Sample 4:	17,500.00
Sample 5:	17,300.00
Sample 6:	0.00
Sample 7:	0.00
Sample 8:	0.00
Sample 9:	0.00
Sample 10:	0.00
Sample 11:	0.00
Sample 12:	0.00
Sample 13:	0.00
Sample 14:	0.00
Sample 15:	0.00
Sample 16:	0.00
Sample 17:	0.00
Sample 18:	0.00
Sample 19:	0.00
Sample 20:	0.00
Average:	17,242.00

✓ Conformance

Non-Conformance

Performed By: D.Smith

This report shall not be reproduced, except in full, without the written approval of Mid West Fabricating Company's Quality Department.

Figure A-13. 10-in (254-mm) Long Guardrail Bolt Material Specifications (cont.), Test Nos. MGSNB-1 and MGSNB-2

11/04/2009 06:10 402-761-3288 MIDWEST MACHINERY PAGE 09/10

Rec'd 6.7.09

Republic

3049 LAKESHORE-GATE 6
PHONE: 330-438-5694

BUFFALO, NY 14219
FAX: 330-438-5695

CERTIFICATE OF TESTS

REPUBLIC ENGINEERED PRODUCTS

June 3, 2009
PAGE 1

OF 2

PURCHASE ORD:	130969M	PURCHASE ORDER DATE:	4/15/2009
PART NUMBER:	100944B	ACCOUNT NUMBER:	5550-3007-01
ORDER NUMBER:	1409650 - 01	SCHEDULE:	5877-68
HEAT:	5072080	REVISION:	1

CHARGE ADDRESS — SHIP TO

TRINITY INDUSTRIES INC
HIGHWAY SAFETY PRODUCTS INC
P O BOX 568887 4TH FLOOR
DALLAS, TX 75356-8887

TRINITY INDUSTRIES INC
C/O SCS METALS PREP
5800 STERLING AVE
MAPLE HEIGHTS, OH 44137

MATERIAL DESCRIPTION

HOT ROLLED STEEL COILS CARBON AISI-1015 AK AL KILLED FINE GRAIN COLD WORKING QUALITY TEST REPORTS OF MECHANICAL PROPERTIES FOR INFO ONLY EXTRA TESTING
SIZE: RDS 1.2190 DIAM X COIL
RDS 30.9626MM DIAM X COIL

LADLE CHEMISTRY %

C	MN	P	S	SI	CU	NI	CR
0.14	0.45	0.013	0.003	0.14	0.05	0.05	0.07
V	MO	SN	AL	CB	N		
0.002	0.02	0.006	0.037	0.000	0.0060		

CALCULATED TESTS

REDUCTION RATIO 39.1 TO 1

AUSTENITIC GRAIN SIZE 5 OR FINER BASED ON A TOTAL ALUMINUM CONTENT EQUAL TO OR GREATER THAN .020% PER ASTM A29.

SEMI - FINISHED RESULTS

FINISHED SIZE RESULTS

TENSILE TEST STANDARD FORMAT

	TENSILE PSI	YIELD(0.2%) PSI	RA %	E %
PCE 01	64530	38930	64.2	33.0

HARDNESS TEST ASTM E10/ASTM A370 HBW AS-RLD/CD HBW

	MID-RADIUS
AVG	112

NOTES

REPUBLIC ENGINEERED PRODUCTS HEREBY CERTIFY THAT THE MATERIAL LISTED HEREIN HAS BEEN INSPECTED AND TESTED IN ACCORDANCE WITH THE METHODS PRESCRIBED IN THE GOVERNING SPECIFICATIONS AND BASED UPON THE RESULTS OF SUCH INSPECTION AND TESTING HAS BEEN APPROVED FOR CONFORMANCE TO THE SPECIFICATIONS.

CERTIFICATE OF TESTS SHALL NOT BE REPRODUCED EXCEPT IN FULL.

ALL TESTING HAS BEEN PERFORMED USING THE CURRENT REVISION OF THE TESTING SPECIFICATIONS.

RECORDING OF FALSE, FICTITIOUS OR FRAUDULENT STATEMENTS OR ENTRIES ON THIS DOCUMENT MAY BE PUNISHED AS A FELONY UNDER FED STATUES TITLE 18 CHAPTER 47.

THE MATERIAL WAS NOT EXPOSED TO MERCURY OR ANY METAL ALLOY THAT IS LIQUID AT AMBIENT TEMPERATURE DURING PROCESSING OR WHILE IN OUR POSSESSION.

NO WELD OR WELD REPAIR WAS PERFORMED ON THIS MATERIAL.

THE RESULTS REPORTED RELATE ONLY TO THE ITEMS TESTED

MELTED AND MANUFACTURED IN THE U.S.A.

R. A. BULLOCK
DIRECTOR QUAL. ASSURANCE

BY HILDA SEGUE

Figure A-14. 5/8-in (16-mm) Diameter Guardrail Nut Material Specifications (cont.), Test Nos. MGSNB-1 and MGSNB-2

11/04/2009 06:10 402-761-3288 MIDWEST MACHINERY

Trinity Metals Laboratory
A DIVISION OF TRINITY INDUSTRIES
4001 IRVING BLVD. 75247 - P.O. BOX 568887
DALLAS, TX 75356-8887
Phone: 214.589.7591 FAX: 214.589.7594

NVLAP
NVLAP LAB CODE 200604-0

Lab No: 9080059F
SUE HENLINE
TRINITY HWY PRODUCTS, LLC #55
ROLLFORM
LIMA, OH 45801

Received Date: 08/07/2009
Heat Code:
Heat Number: 5072080,
PO or Work Order: 55-50083
Test Spec: F606 ASTM METHODS
Other Information: Lot # 090717N2

Completion Date: 08/10/2009
Weld Spec:
Material Type: A 563 A
Material Size: 5/8" GR Nuts 33409

PASSED

Hardness Type: HARDNESS ROCKWELL BW
Hardness Location: SURFACE of WRENCH FLAT - E
Hardness Average: 88

Measured Value	Measured Amt
Measured Value	88
Measured Value	88

OTHER TEST:

Type: NUT PROOF LOAD — Quantity amount: 5
Samples PASSED proof loads of 16,950 LBS.

Type: HEAD MARKINGS — Quantity amount: 1
TRN L

We certify the above results to be a true and accurate representation of the sample(s) submitted. Alteration or partial reproduction of this report will void certification. NVLAP Certificate of Accreditation effective through 12-31-09. This report may not be used to claim product certification, approval, or endorsement by NVLAP, NIST, or any agency of the federal government.

Lab Director, Michael S. Beaton, PE

Page 2 of 2

Figure A-15. 5/8-in (16-mm) Diameter Guardrail Nut Material Specifications (cont.), Test Nos. MGSNB-1 and MGSNB-2

11/04/2009 06:10 402-761-3288 MIDWEST MACHINERY PAGE 07/10

Trinity Metals Laboratory
A DIVISION OF TRINITY INDUSTRIES
4001 IRVING BLVD. 75247 - P.O. BOX 568887
DALLAS, TX 75356-8887
Phone: 214.589.7591 FAX: 214.589.7594

NVLAP
NVLAP LAB CODE 200654-0

Lab No: 9080059F
SUE HENLINE
TRINITY HWY PRODUCTS, LLC #55
ROLLFORM
LIMA, OH 45801

Received Date: 08/07/2009
Heat Code:
Heat Number: 5072060
PO or Work Order: 55-50083
Test Spec: F606 ASTM METHODS
Other Information: Lot # 090717N2

Completion Date: 08/10/2009
Weld Spec:
Material Type: A 563 A
Material Size: 5/8" GR Nuts 3340B

HARDNESS TEST:

Hardness Type: HARDNESS ROCKWELL BW
Hardness Location: SURFACE of WRENCH FLAT - A
Hardness Average: 88.5

Measured Value	Measured Amt
Measured Value	89
Measured Value	88

PASSED

Hardness Type: HARDNESS ROCKWELL BW
Hardness Location: SURFACE of WRENCH FLAT - B
Hardness Average: 92

Measured Value	Measured Amt
Measured Value	92
Measured Value	92

PASSED

Hardness Type: HARDNESS ROCKWELL BW
Hardness Location: SURFACE of WRENCH FLAT - C
Hardness Average: 87.5

Measured Value	Measured Amt
Measured Value	88
Measured Value	87

PASSED

Hardness Type: HARDNESS ROCKWELL BW
Hardness Location: SURFACE of WRENCH FLAT - D
Hardness Average: 89.5

Measured Value	Measured Amt
Measured Value	90
Measured Value	89

PASSED

We certify the above results to be a true and accurate representation of the sample(s) submitted. Alteration or partial reproduction of this report will void certification. NVLAP Certificate of Accreditation effective through 12-31-09. This report may not be used to claim product certification, approval, or endorsement by NVLAP, NIST, or any agency of the federal government.

Lab Director, Michael S. Beaton, PE

Page 1 of 2

Figure A-16. 5/8-in (16-mm) Diameter Guardrail Nut Material Specifications (cont.), Test Nos. MGSNB-1 and MGSNB-2

11/04/2009 06:10 402-761-3288 MIDWEST MACHINERY PAGE 06/10

TRINITY HIGHWAY PRODUCTS, LLC.
425 E. O'CONNOR AVENUE
LIMA, OHIO 45801
419-227-1296

MATERIAL CERTIFICATION

CUSTOMER: STOCK	DATE: JULY 27, 2009
	INVOICE #:
	LOT #: 090717N2
PART NUMBER: 3340G	QUANTITY: 62,000
DESCRIPTION: 5/8" GR NUT	DATE SHIPPED
SPECIFICATIONS: ASTM A563-A/A153	HEAT 5072080

MATERIAL CHEMISTY

C	MN	P	S	SI	CU	NI	CR	V	MO	SN	AL	CB	N		
.14	.45	.013	.003	.14	.05	.05	.07	.002	.02	.006	.037	.000	.006		

PLATING AND/OR PROTECTIVE COATING

HOT DIP GALVANIZING (OZ. PER SQ. FT.)	2.81 AVG.

****THIS PRODUCT WAS MANUFACTURED IN THE UNITED STATES OF AMERICA***

THE MATERIAL USED IN THIS PRODUCT WAS MELTED AND MANUFACTURED IN THE U.S.A.

WE HEREBY CERTIFY THAT TO THE BEST OF OUR KNOWLEDGE ALL INFORMATION CONTAINED HEREIN IS CORRECT.

TRINITY HIGHWAY PRODUCTS, LLC.

STATE OF OHIO, COUNTY OF ALLEN
SWORN AND SUBSCRIBED BEFORE ME
THIS 27TH DAY OF JULY, 2009

NOTARY PUBLIC

425 E. O'CONNOR AVENUE LIMA, OHIO 45801 419-227-1296

Figure A-17. 5/8-in (16-mm) Diameter Guardrail Nut Material Specifications (cont.), Test Nos. MGSNB-1 and MGSNB-2

11/04/2009 06:10 402-751-3288 MIDWEST MACHINERY PAGE 04/10

1009418

Republic

1807 EAST 28TH ST.
PHONE: 330-438-5694

LORAIN, OH 44055
FAX: 330-438-5695

CERTIFICATE OF TESTS REPUBLIC ENGINEERED PRODUCTS

May 6, 2009
PAGE 1

OF 2

PURCHASE ORD:	130863M	PURCHASE ORDER DATE:	4/1/2009
PART NUMBER:	1009418	ACCOUNT NUMBER:	5550-3007-01
ORDER NUMBER:	1409019 - 01	SCHEDULE:	5063-86
HEAT:	5072014	REVISION:	1

CHARGE ADDRESS

TRINITY INDUSTRIES INC
HIGHWAY SAFETY PRODUCTS INC
P O BOX 568887 4TH FLOOR
DALLAS, TX 75356-8887

SHIP TO

TRINITY INDUSTRIES INC
C/O BCS METALS PRSP
5800 STERLING AVE
MAPLE HEIGHTS, OH 44137

MATERIAL DESCRIPTION

HOT ROLLED STEEL COILS CARBON AISI-1015 AX AL KILLED FINE GRAIN COLD WORKING QUALITY TEST REPORTS OF MECHANICAL PROPERTIES FOR INFO ONLY EXTRA TESTING
SIZE: RDS .6390 DIAM X COIL
RDS 16.2306MM DIAM X COIL

LADLE CHEMISTRY %

C	MN	P	S	SI	CU	NI	CR
0.15	0.47	0.006	0.002	0.09	0.05	0.06	0.05
V	MO	SN	AL	CB	N		
0.000	0.02	0.005	0.046	0.000	0.0063		

CALCULATED TESTS

REDUCTION RATIO 112.3 TO 1

AUSTENITIC GRAIN SIZE 5 OR FINER BASED ON A TOTAL ALUMINUM CONTENT EQUAL TO OR GREATER THAN .020% PER ASTM A29.

SEMI - FINISHED RESULTS

FINISHED SIZE RESULTS

TENSILE TEST STANDARD FORMAT

	TENSILE PSI	YIELD(0.2%) PSI	RA %	E %
PCE 2728	63100	44200	65.4	39.0

HARDNESS TEST ASTM E10/ASTM A370 HBW AS-RLD/CD HBW

	MID-RADIUS
PCE 2729	116

NOTES

CHEMICAL ANALYSIS CONFORMS TO APPLICABLE SPECS: ASTM E415, LBL10129, LBL10130, ASTM E1019, LBL10150, LBL10114, AND ASTM E1085, LBL10184, LBL10188.

REPUBLIC ENGINEERED PRODUCTS HEREBY CERTIFY THAT THE MATERIAL LISTED HEREIN HAS BEEN INSPECTED AND TESTED IN ACCORDANCE WITH THE METHODS PRESCRIBED IN THE GOVERNING SPECIFICATIONS AND BASED UPON THE RESULTS OF SUCH INSPECTION AND TESTING HAS BEEN APPROVED FOR CONFORMANCE TO THE SPECIFICATIONS.

CERTIFICATE OF TESTS SHALL NOT BE REPRODUCED EXCEPT IN FULL.

ALL TESTING HAS BEEN PERFORMED USING THE CURRENT REVISION OF THE TESTING SPECIFICATIONS.

RECORDING OF FALSE, FICTITIOUS OR FRAUDULENT STATEMENTS OR ENTRIES ON THIS DOCUMENT MAY BE PUNISHED AS A FELONY UNDER FED STATUES TITLE 18 CHAPTER 47.

THE MATERIAL WAS NOT EXPOSED TO MERCURY OR ANY METAL ALLOY THAT IS LIQUID AT AMBIENT TEMPERATURE DURING PROCESSING OR WHILE IN OUR POSSESSION.

NO WELD OR WELD REPAIR WAS PERFORMED ON THIS MATERIAL.

R. A. SZELIGA
MANAGER TECH. SERVICES

BY HILDA BEXUE

R. A. Szeliga

Figure A-18. 5/8-in (16-mm) Diameter x 1 ½-in (38-mm) Guardrail Bolt Material Specifications (cont.), Test Nos. MGSNB-1 and MGSNB-2

11/04/2009 06:10 402-761-3288 MIDWEST MACHINERY PAGE 03/10

Trinity Metals Laboratory
A DIVISION OF TRINITY INDUSTRIES
4001 IRVING BLVD. 75247 - P.O. BOX 568887
DALLAS, TX 75356-8887
Phone: 214.589.7591 FAX: 214.589.7594

NVLAP
NVLAP LAB CODE 200534-0

Lab No: 9080115F
SUE HENLINE
TRINITY HWY PRODUCTS, LLC #55
ROLLFORM
LIMA, OH 45801

Received Date: 08/12/2009
Heat Code:
Heat Number: 5072014
PO or Work Order: LOT# 0907038
Test Spec: F606 ASTM METHODS
Other Information: S/O No. 55-50201

Completion Date: 08/13/2009
Weld Spec:
Material Type: 307 A
Material Size: 5/8" X 1-1/4" GR B

OTHER TEST:

Type: HARDNESS ROCKWELL BW — Quantity amount: 20

A) 87-87-87-88
B) 87-86-87-88
C) 85-87-86-87
D) 88-86-88-89
E) 87-87-88-87

Type: HEAD MARKINGS — Quantity amount: 1
TRN USA 307A M

We certify the above results to be a true and accurate representation of the sample(s) submitted. Alteration or partial reproduction of this report will void certification. NVLAP Certificate of Accreditation effective through 12-31-09. This report may not be used to claim product certification, approval, or endorsement by NVLAP, NIST, or any agency of the federal government.

Lab Director, Michael S. Reeter, PE

Page 1 of 1

Figure A-19. 5/8-in (16-mm) Diameter x 1 ½-in. (38-mm) Guardrail Bolt Material Specifications (cont.), Test Nos. MGSNB-1 and MGSNB-2

11/04/2009 06:10 402-761-3288 MIDWEST MACHINERY PAGE 02/10

TRINITY HIGHWAY PRODUCTS, LCC.
Plant #55
425 E. O' CONNOR AVENUE
Lima, OH 45801
419-227-1296

MATERIAL CERTIFICATION

CUSTOMER: STOCK	DATE: JULY29, 2009
	INVOICE #
	LOT NUMBER: 090703B
PART NUMBER: 3360G	QUANTITY: 110,765
DESCRIPTION: 5/8"x 1 ½" GR BOLT	DATE SHIPPED:
SPECIFICATIONS: ASTM A307-A /A153	HEAT#: 5072014

MATERIAL CHEMISTRY

C	MN	P	S	SI	NI	CR	MO	CU	SN	V	AL	N	B	TI	NB
.15	.47	.006	.003	.09	.06	.05	.02	.05	.005	.000	.046	.0063	.000	.000	.000

PLATING AND/OR PROTECTIVE COATING

HOT DIP GALVANIZED (OZ. PER SQ. FT.)		1.25 Avg.

****THIS PRODUCT WAS MANUFACTURED IN THE UNITED STATES OF AMERICA****

THE MATERIAL USED IN THIS PRODUCT WAS MELTED AND MANUFACTURED IN THE U.S.A

WE HEREBY CERTIFY THAT TO THE BEST OF OUR KNOWLEDGE ALL INFORMATION CONTAINED HEREIN IS CORRECT.

TRINITY HIGHWAY PRODUCTS, LLC.

STATE OF OHIO, COUNTY OF ALLEN
SWORN AND SUBSCRIBED BEFORE ME
THIS 29TH DAY OF JULY, 2009

NOTARY PUBLIC

425 E. O 'CONNOR AVENUE LIMA, OH 45801 419-227-1296

Figure A-20. 5/8-in (16-mm) Diameter x 1 ½" (38 mm) Guardrail Bolt Material Specifications (cont.), Test Nos. MGSNB-1 and MGSNB-2

11/04/2009 06:10 402-761-3288 MIDWEST MACHINERY PAGE 09/10

Rec'd 6.7.09

Republic

3049 LAKESHORE-GATE 6
PHONE: 330-438-5694

BUFFALO, NY 14219
FAX: 330-438-5695

CERTIFICATE OF TESTS

REPUBLIC ENGINEERED PRODUCTS

June 3, 2009
PAGE 1

OF 2

PURCHASE ORD:	130969M	PURCHASE ORDER DATE:	4/15/2009
PART NUMBER:	100944B	ACCOUNT NUMBER:	5550-3007-01
ORDER NUMBER:	1409650 - 01	SCHEDULE:	5877-68
HEAT:	5072080	REVISION:	1

CHARGE ADDRESS — SHIP TO

TRINITY INDUSTRIES INC
HIGHWAY SAFETY PRODUCTS INC
P O BOX 568887 4TH FLOOR
DALLAS, TX 75356-8887

TRINITY INDUSTRIES INC
C/O SCS METALS PREP
5800 STERLING AVE
MAPLE HEIGHTS, OH 44137

MATERIAL DESCRIPTION

HOT ROLLED STEEL COILS CARBON AISI-1015 AK AL KILLED FINE GRAIN COLD WORKING QUALITY TEST REPORTS OF MECHANICAL PROPERTIES FOR INFO ONLY EXTRA TESTING
SIZE: RDS 1.2190 DIAM X COIL
RDS 30.9626MM DIAM X COIL

LADLE CHEMISTRY %

C	MN	P	S	SI	CU	NI	CR
0.14	0.45	0.013	0.003	0.14	0.05	0.05	0.07
V	MO	SN	AL	CB	N		
0.002	0.02	0.006	0.037	0.000	0.0060		

CALCULATED TESTS

REDUCTION RATIO 39.1 TO 1

AUSTENITIC GRAIN SIZE 5 OR FINER BASED ON A TOTAL ALUMINUM CONTENT EQUAL TO OR GREATER THAN .020% PER ASTM A29.

SEMI - FINISHED RESULTS

FINISHED SIZE RESULTS

TENSILE TEST STANDARD FORMAT

	TENSILE PSI	YIELD(0.2%) PSI	RA %	E %
PCE 01	64530	38930	64.2	33.0

HARDNESS TEST ASTM E10/ASTM A370 HBW AS-RLD/CD HBW

	MID-RADIUS
AVG	112

NOTES

REPUBLIC ENGINEERED PRODUCTS HEREBY CERTIFY THAT THE MATERIAL LISTED HEREIN HAS BEEN INSPECTED AND TESTED IN ACCORDANCE WITH THE METHODS PRESCRIBED IN THE GOVERNING SPECIFICATIONS AND BASED UPON THE RESULTS OF SUCH INSPECTION AND TESTING HAS BEEN APPROVED FOR CONFORMANCE TO THE SPECIFICATIONS.

CERTIFICATE OF TESTS SHALL NOT BE REPRODUCED EXCEPT IN FULL.

ALL TESTING HAS BEEN PERFORMED USING THE CURRENT REVISION OF THE TESTING SPECIFICATIONS.

RECORDING OF FALSE, FICTITIOUS OR FRAUDULENT STATEMENTS OR ENTRIES ON THIS DOCUMENT MAY BE PUNISHED AS A FELONY UNDER FED STATUES TITLE 18 CHAPTER 47.

THE MATERIAL WAS NOT EXPOSED TO MERCURY OR ANY METAL ALLOY THAT IS LIQUID AT AMBIENT TEMPERATURE DURING PROCESSING OR WHILE IN OUR POSSESSION.

NO WELD OR WELD REPAIR WAS PERFORMED ON THIS MATERIAL.

THE RESULTS REPORTED RELATE ONLY TO THE ITEMS TESTED

MELTED AND MANUFACTURED IN THE U.S.A.

R. A. BULLOCK
DIRECTOR QUAL. ASSURANCE

BY HILDA SEGUE

Figure A-21. 5/8-in (16-mm) Diameter Guardrail Nut, Material Specifications (cont.), Test Nos. MGSNB-1 and MGSNB-2

11/04/2009 06:10 402-761-3288 MIDWEST MACHINERY

Trinity Metals Laboratory
A DIVISION OF TRINITY INDUSTRIES
4001 IRVING BLVD. 75247 - P.O. BOX 568887
DALLAS, TX 75356-8887
Phone: 214.589.7591 FAX: 214.589.7594

NVLAP
NVLAP LAB CODE 200604-0

Lab No: 9080059F
SUE HENLINE
TRINITY HWY PRODUCTS, LLC #55
ROLLFORM
LIMA, OH 45801

Received Date: 08/07/2009
Heat Code:
Heat Number: 5072080,
PO or Work Order: 55-50083
Test Spec: F606 ASTM METHODS
Other Information: Lot # 090717N2

Completion Date: 08/10/2009
Weld Spec:
Material Type: A 563 A
Material Size: 5/8" GR Nuts 3340B

PASSED

Hardness Type: HARDNESS ROCKWELL BW
Hardness Location: SURFACE of WRENCH FLAT - E
Hardness Average: 88

Measured Value	Measured Amt
Measured Value	88
Measured Value	88

OTHER TEST:

Type: NUT PROOF LOAD
Samples PASSED proof loads of 16,950 LBS.
Quantity amount: 5

Type: HEAD MARKINGS
TRN L
Quantity amount: 1

We certify the above results to be a true and accurate representation of the sample(s) submitted. Alteration or partial reproduction of this report will void certification. NVLAP Certificate of Accreditation effective through 12-31-09. This report may not be used to claim product certification, approval, or endorsement by NVLAP, NIST, or any agency of the federal government.

Lab Director, Michael S. Beaton, PE

Page 2 of 2

Figure A-22. 5/8-in (16-mm) Diameter Guardrail Nut Material Specifications (cont.), Test Nos. MGSNB-1 and MGSNB-2

11/04/2009 06:10 402-761-3288 MIDWEST MACHINERY PAGE 07/10

Trinity Metals Laboratory
A DIVISION OF TRINITY INDUSTRIES
4001 IRVING BLVD. 75247 - P.O. BOX 568887
DALLAS, TX 75356-8887
Phone: 214.589.7591 FAX: 214.589.7594

NVLAP
NVLAP LAB CODE 200554-0

Lab No: 9080059F
SUE HENLINE
TRINITY HWY PRODUCTS, LLC #55
ROLLFORM
LIMA, OH 45801

Received Date: 08/07/2009
Heat Code:
Heat Number: 5072060
PO or Work Order: SS-50083
Test Spec: F606 ASTM METHODS
Other Information: Lot # 090717N2

Completion Date: 08/10/2009
Weld Spec:
Material Type: A 563 A
Material Size: 5/8" GR Nuts 3340B

HARDNESS TEST:

Hardness Type: HARDNESS ROCKWELL BW
Hardness Location: SURFACE of WRENCH FLAT - A
Hardness Average: 88.5

Measured Value	Measured Amt
Measured Value	89
Measured Value	88

PASSED

Hardness Type: HARDNESS ROCKWELL BW
Hardness Location: SURFACE of WRENCH FLAT - B
Hardness Average: 92

Measured Value	Measured Amt
Measured Value	92
Measured Value	92

PASSED

Hardness Type: HARDNESS ROCKWELL BW
Hardness Location: SURFACE of WRENCH FLAT - C
Hardness Average: 87.5

Measured Value	Measured Amt
Measured Value	88
Measured Value	87

PASSED

Hardness Type: HARDNESS ROCKWELL BW
Hardness Location: SURFACE of WRENCH FLAT - D
Hardness Average: 89.5

Measured Value	Measured Amt
Measured Value	90
Measured Value	89

PASSED

We certify the above results to be a true and accurate representation of the sample(s) submitted. Alteration or partial reproduction of this report will void certification. NVLAP Certificate of Accreditation effective through 12-31-09. This report may not be used to claim product certification, approval, or endorsement by NVLAP, NIST, or any agency of the federal government.

Lab Director, Michael S. Beaton, PE

Page 1 of 2

Figure A-23. 5/8-in (16-mm) Diameter Guardrail Nut Material Specifications (cont.), Test Nos. MGSNB-1 and MGSNB-2

11/04/2009 06:10 402-761-3288 MIDWEST MACHINERY PAGE 06/10

TRINITY HIGHWAY PRODUCTS, LLC.
425 E. O'CONNOR AVENUE
LIMA, OHIO 45801
419-227-1296

MATERIAL CERTIFICATION

CUSTOMER: STOCK	DATE: JULY 27, 2009
	INVOICE #:
	LOT #: 090717N2
PART NUMBER: 3340G	QUANTITY: 62,000
DESCRIPTION: 5/8" GR NUT	DATE SHIPPED
SPECIFICATIONS: ASTM A563-A/A153	HEAT 5072080

MATERIAL CHEMISTY

C	MN	P	S	SI	CU	NI	CR	V	MO	SN	AL	CB	N		
.14	.45	.013	.003	.14	.05	.05	.07	.002	.02	.006	.037	.000	.006		

PLATING AND/OR PROTECTIVE COATING

HOT DIP GALVANIZING (OZ. PER SQ. FT.)	2.81 AVG.

****THIS PRODUCT WAS MANUFACTURED IN THE UNITED STATES OF AMERICA***

THE MATERIAL USED IN THIS PRODUCT WAS MELTED AND MANUFACTURED IN THE U.S.A.

WE HEREBY CERTIFY THAT TO THE BEST OF OUR KNOWLEDGE ALL INFORMATION CONTAINED HEREIN IS CORRECT.

TRINITY HIGHWAY PRODUCTS, LLC.

STATE OF OHIO, COUNTY OF ALLEN
SWORN AND SUBSCRIBED BEFORE ME
THIS 27TH DAY OF JULY, 2009

NOTARY PUBLIC

425 E. O'CONNOR AVENUE LIMA, OHIO 45801 419-227-1296

Figure A-24. 5/8-in (16-mm) Diameter Guardrail Nut Material Specifications (cont.), Test Nos. MGSNB-1 and MGSNB-2

425 E. O'Connor
Lima, OH

Customer: MIDWEST MACH.& SUPPLY CO.
P. O. BOX 81097

LINCOLN, NE 68501-1097

Sales Order: 1093497
Customer PO: 2030
BOL # 43073
Document # 1

Print Date: 6/30/08
Project: RESALE
Shipped To: NE
Use State: KS

Trinity Highway Products, LLC

Certificate Of Compliance For Trinity Industries, Inc. ** SLOTTED RAIL TERMINAL **

NCHRP Report 350 Compliant

MIDWEST MACHINERY

Pieces	Description
32	12/12'6/S SRT-1
32	12/25'0/SPEC/S SRT-2
32	3/16X12.5X16 CAB ANC BRKT
32	2" X 5 1/2" PIPE (LONG)
64	6'0 TUBE SL/.188X8X6
32	5/8 X 6 X 8 BEARING PLATE
32	12/BUFFER/ROLLED
32	CBL 3/4X6'6/DBL SWG/NOHWD
640	5/8" RD WASHER 1 3/4 OD
1,728	5/8" GR HEX NUT
1,152	5/8"X1.25" GR BOLT
256	5/8"X1.5" HEX BOLT A307
64	5/8"X9.5" HEX BOLT A307

Upon delivery, all materials subject to Trinity Highway Products , LLC Storage Stain Policy No. LG-002.

402-751-2988

ALL STEEL USED WAS MELTED AND MANUFACTURED IN USA AND COMPLIES WITH THE BUY AMERICA ACT
ALL GUARDRAIL MEETS AASHTO M-180, ALL STRUCTURAL STEEL MEETS ASTM A36
ALL OTHER GALVANIZED MATERIAL CONFORMS WITH ASTM-123.
BOLTS COMPLY WITH ASTM A-307 SPECIFICATIONS AND ARE GALVANIZED IN ACCORDANCE WITH ASTM A-153, UNLESS OTHERWISE STATED.
NUTS COMPLY WITH ASTM A-563 SPECIFICATIONS AND ARE GALVANIZED IN ACCORDANCE WITH ASTM A-153, UNLESS OTHERWISE STATED.
1/4" DIA CABLE 6X19 ZINC COATED SWAGED END AISI C-1035 STEEL ANNEALED STUD 1" DIA ASTM 449 AASHTO M30, TYPE II BREAKING
STRENGTH – 49100 LB
State of Ohio, County of Allen. Sworn and Subscribed before me this 30th day of June, 2008

Notary Public:
Commission Expires

Trinity Highway Products, LLC
Certified By:

Figure A-25. 5/8-in (16-mm) Diameter Flat Washer Material Specifications, Test Nos. MGSNB-1 and MGSNB-2

RECEIVED
OCT 05 2005
UNL FMP

03/09/2009 14:21 4024722822 MWRSF PAGE 01

GREGORY HIGHWAY PRODUCTS, INC.
4100 13th St. P.O. Box 80508
Canton, Ohio 44708

Test Report

Customer: UNIVERSITY OF NEBRASKA-LINCOLN
401 CANFIELD ADMIN BLDG
P O BOX 880439
LINCOLN, NE. 68588-0439

B.O.L. # 15808 DATE SHIPPED: 09/27/05
Customer P.O.: VERBAL JOHN ROHDE
Shipped to: UNIVERSITY OF NEBRASKA-LINCOLN
Project: STOCK
GHP Order No.: 44822

HEAT #	C.	Mn.	P.	S.	Si.	Tensile	Yield	Elong.	Quantity	Class	Type	Description
3390	0.21	0.8	0.013	0.007	0.01	81660	62520	20.76	160	-	2	12GA 12FT6IN/3FT1 1/2IN WB T2

Bolts comply with ASTM A-307 specifications and are galvanized in accordance with ASTM A-153, unless otherwise stated.
Nuts comply with ASTM A-563 specifications and are galvanized in accordance with ASTM A-153, unless otherwise stated.
All other galvanized material conforms with ASTM-123 & ASTM-525
All steel used in the manufacture is of Domestic Origin, "Made and Melted in the United States"
All Guardrail and Terminal Sections meets AASHTO M-180. All structural steel meets AASHTO M-183 & M270
All Bolts and Nuts are of Domestic Origin

By: Andrew Artar
Vice President of Sales and Marketing
Gregory Highway Products, Inc.

RECEIVED
OCT - 3 2005
UNL ACCOUNTING

STATE OF OHIO: COUNTY OF STARK
Sworn to and subscribed before me, a Notary Public, by
Andrew Artar this 28th day of September, 2005

Dawn R. Batton
Notary Public, State of Ohio
My Commission Expires February 24, 2008

Figure A-26. W-Beam Backup Plate Material Specifications, Test Nos. MGSNB-1 and MGSNB-2

GREGORY HIGHWAY PRODUCTS, INC.
4100 13th St. P.O. Box 80508
Canton, Ohio 44708

MAY 14 2009

Customer: UNIVERSITY OF NEBRASKA-LINCOLN
401 CANFIELD ADMIN BLDG
P O BOX 880439
LINCOLN, NE. 68588-0439

Test Report
B.O.L. # 39963 DATE SHIPPED: 05/07/09
Customer P.O. 4500204081/ 04/06/2009
Shipped to: UNIVERSITY OF NEBRASKA-LINCOLN
Project : TEST PANELS
GHP Order No 105271

HT # code	C.	Mn.	P.	S.	Si.	Tensile	Yield	Elong.	Quantity	Class	Type	Description
4614	0.21	0.84	0.011	0.003	0.03	89432	67993	19.8	160	A	2	12GA 12FT6IN/3FT1 1/2IN WB T2

Bolts comply with ASTM A-307 specifications and are galvanized in accordance with ASTM A-153, unless otherwise stated.
Nuts comply with ASTM A-563 specifications and are galvanized in accordance with ASTM A-153, unless otherwise stated.
All other galvanized material conforms with ASTM-123 & ASTM-525
All steel used in the manufacture is of Domestic Origin, "Made and Melted in the United States"
All Guardrail and Terminal Sections meets AASHTO M-180, All structural steel meets AASHTO M-183 & M270
All Bolts and Nuts are of Domestic Origin
All material fabricated in accordance with Nebraska Department of Transportation
All controlled oxidized/corrosion resistant Guardrail and terminal sections meet ASTM A606, Type 4.

By: Andrew Artar
Andrew Artar
Vice President of Sales & Marketing
Gregory Highway Products, Inc.

STATE OF OHIO: COUNTY OF STARK
Sworn to and subscribed before me, a Notary Public, by
Andrew Artar this 8th day of May, 2009.
Cynthia K Crawford
Notary Public, State of Ohio

NOTARIAL SEAL STATE OF OHIO

CYNTHIA K. CRAWFORD
Notary Public, State of Ohio
My Commission Expires 09-16-2012

Figure A-27. W-Beam Backup Plate Material Specifications (cont.), Test Nos. MGSNB-1 and MGSNB-2

AMERICAN TIMBER AND STEEL
FORMERLY MIDWESTERN WHOLESALERS, INC.

This is to certify that the materials shipped, as indicated, conform to the State of Nebraska specifications.
Order Number: 89198
Project Number:

QUANTITY	DESCRIPTION	CHARGE NO.	TREATMENT	TREATER
50	6x8-46" DSS SYP S4S BCT Post	38040	CCA	MWT

BCT Posts
10-0282
White
+ white tags.

MWT - MIDWEST WOOD TREATING, INC., NORWALK, OH
MWT-OK - MIDWEST WOOD TREATING, INC., CHICKASHA, OK

Made & Treated in the USA. Meets AASHTO Specs M133 & M168.

AMERICAN TIMBER AND STEEL
By Heather L. Seward
Title Sales Assistant
Date April 13, 2010

NOTARIZED
Sworn to and subscribed before me
this 13th day of April 2010.
by Hope Wilhelm

NOTARY PUBLIC
Hope Wilhelm
Resident Huron County
Notary Public, State Of Ohio
My Commission Expires
March 8, 2014

American Timber And Steel Corp 4832 Plank Rd / PO Box 767 Norwalk, OH 44857 Ph: 419.668.1610 Fax: 419.663.1077

"THE TIMBER SPECIALISTS"

Figure A-28. BCT Timber Post – MGS Height SYP Grade No. 1 or Better, Test Nos. MGSNB-1 and MGSNB-2

MATERIAL TEST REPORT

ATE: 09/25/07

PAGE: 1

BILL OF LADING: 164358

LEAVITT TUBE COMPANY, LLC

LEAVITT
The Tube People

Leavitt Tube Co., LLC
1717 W. 115th St.
Chicago, IL 60643

Phone: 773-239-7700
Phone: 1-800-LEAVITT
Fax: 773-239-1023
www.leavitt-tube.com
QA1002-0003 Rev. 0

CUST: STEEL & PIPE SUPPLY - CATOOSA OK
1050 FORT GIBSON ROAD
CATOOSA OK 74015

TUBING MANUFACTURED IN USA

ATTN: * Test Report Desk

106201 8027185

ITEM NO.	PIECES	SIZE, GAUGE,LENGTH	QTY. SHIPPED	CUSTOMER P.O.	ORDER NUMBER	CUSTOMER PART NBR	ASTM SPECIFICATION	GRADE
1	7	8.625-322HRB 252	147	4500088611	1015580 1.000		A500-03b	B
2	6	12X2-188HRB 480	240	4500088813	1016034 1.000		A500-03b	B
3 - 4	28	8.625-322HRB 504	1,176	4500091471	1025579 1.000		A500-03b	B
5	9	8X6-188HRB 480	360	4500092386	1029189 1.000		A500-03b	B

ITEM NO.	1	2	3	4	5
COIL NO.	395453	395532	395813	395460	391232
HEAT NO.	722562	722551	722564	722564	A13386
CORRECTED COIL					
CARBON	.210	.210	.210	.210	.220
MANGANESE	.820	.860	.820	.820	.700
PHOSPHORUS	.004	.006	.004	.004	.006
SULFUR	.006	.004	.006	.006	.003
ALUMINUM	.047	.050	.047	.047	.024
SILICON	.020	.030	.020	.020	.030
WELD TESTING	FLATTEN	FLARE	FLATTEN	FLATTEN	FLARE
YIELD STRENGTH (PSI)	47,297			52,000	55,056
TENSILE STRENGTH (PSI)	62,162			70,666	70,787
ELONGATION IN 2" (%)	29.0			31.0	27.0

Item(s)- 1 2 3 4 5 Are
Made and Melted
In The U.S.A.

I HEREBY CERTIFY THAT THE ABOVE IS CORRECT
AS CONTAINED IN THE RECORDS OF THE COMPANY.

Figure A-29. Foundation Tube Material Specifications, Test Nos. MGSNB-1 and MGSNB-2

425 E. O'Connor
Lima, OH

Customer: MIDWEST MACH.& SUPPLY CO.
P. O. BOX 81097

LINCOLN, NE 68501-1097

Sales Order: 1093497
Customer PO: 2030
BOL # 43073
Document # 1

Print Date: 6/30/08
Project: RESALE
Shipped To: NE
Use State: KS

Trinity Highway Products, LLC

Certificate Of Compliance For Trinity Industries, Inc. ** SLOTTED RAIL TERMINAL **

NCHRP Report 350 Compliant

Pieces	Description
64	5/8"X10" GR BOLT A307
192	5/8"X18" GR BOLT A307
32	1" ROUND WASHER F844
64	1" HEX NUT A563
192	WD 6'0 POST 6X8 CRT
192	WD BLK 6X8X14 DR
64	NAIL 16d SRT
64	WD 3'9 POST 5.5X7.5 BAND
32	STRUT & YOKE ASSY
128	SLOT GUARD '98
32	3/8 X 3 X 4 PL WASHER

MGSBR

Ground Strut

090453-8

Upon delivery, all materials subject to Trinity Highway Products , LLC Storage Stain Policy No. LG-002.

ALL STEEL USED WAS MELTED AND MANUFACTURED IN USA AND COMPLIES WITH THE BUY AMERICA ACT
ALL GUARDRAIL MEETS AASHTO M-180, ALL STRUCTURAL STEEL MEETS ASTM A36
ALL OTHER GALVANIZED MATERIAL CONFORMS WITH ASTM-123.
BOLTS COMPLY WITH ASTM A-307 SPECIFICATIONS AND ARE GALVANIZED IN ACCORDANCE WITH ASTM A-153, UNLESS OTHERWISE STATED.
NUTS COMPLY WITH ASTM A-563 SPECIFICATIONS AND ARE GALVANIZED IN ACCORDANCE WITH ASTM A-153, UNLESS OTHERWISE STATED.
3/4" DIA CABLE 6X19 ZINC COATED SWAGED END AISI C-1035 STEEL ANNEALED STUD 1" DIA. ASTM 449 AASHTO M30, TYPE II BREAKING STRENGTH – 49100 LB

State of Ohio, County of Allen. Sworn and Subscribed before me this 30th day of June, 2008

Notary Public:
Commission Expires

Trinity Highway Products, LLC
Certified By:

2 of 4

06/04/2009 16:36 402-761-3288

Figure A-30. Strut and Yoke Assembly Material Specifications, Test Nos. MGSNB-1 and MGSNB-2

Certified Analysis

Trinity Highway Products , LLC
2548 N.E. 28th St.
Ft Worth, TX
Customer: MIDWEST MACH.& SUPPLY CO.
P. O. BOX 81097

LINCOLN, NE 68501-1097
Project: RESALE

Order Number: 1095199
Customer PO: 2041
BOL Number: 24481
Document #: 1
Shipped To: NE
Use State: KS

As of: 6/20/08

Qty	Part#	Description	Spec	CL	TY	Heat Code/ Heat #	Yield	TS	Elg	C	Mn	P	S	Si	Cu	Cb	Cr	Vn	ACW
25	6G	12/63/8	M-180 A			84964	64,230	81,300	25.4	0.180	0.720	0.012	0.001	0.040	0.080	0.000	0.060	0.000	4
20	701A	.25X11.75X16 CAB ANC	A-36			4153095	44,900	60,800	34.0	0.240	0.750	0.012	0.003	0.020	0.020	0.000	0.040	0.002	4
10	742G	6"0 TUBE SL/.188X8X6	A-500			A8P1160	74,000	87,000	25.2	0.050	0.670	0.013	0.005	0.030	0.220	0.000	0.060	0.021	4
20	782G	5/8"X8"X8" BEAR PL/OF	A-36			6106195	46,700	69,900	23.5	0.180	0.830	0.010	0.005	0.020	0.230	0.000	0.070	0.006	4
40	907G	12/BUFFER/ROLLED	M-180 A			L0049	54,200	73,500	25.0	0.160	0.700	0.011	0.008	0.020	0.200	0.000	0.100	0.000	4

Upon delivery, all materials subject to Trinity Highway Products , LLC Storage Stain Policy No. LG-002.

ALL STEEL USED WAS MELTED AND MANUFACTURED IN USA AND COMPLIES WITH THE BUY AMERICA ACT.
ALL GUARDRAIL MEETS AASHTO M-180, ALL STRUCTURAL STEEL MEETS ASTM A36
ALL OTHER GALVANIZED MATERIAL CONFORMS WITH ASTM-123.
BOLTS COMPLY WITH ASTM A-307 SPECIFICATIONS AND ARE GALVANIZED IN ACCORDANCE WITH ASTM A-153, UNLESS OTHERWISE STATED.
NUTS COMPLY WITH ASTM A-563 SPECIFICATIONS AND ARE GALVANIZED IN ACCORDANCE WITH ASTM A-153, UNLESS OTHERWISE STATED.

3/4" DIA CABLE 6X19 ZINC COATED SWAGED END AISI C-1035 STEEL ANNEALED STUD 1" DIA ASTM 449 AASHTO M30, TYPE II BREAKING STRENGTH – 49100 LB

State of Texas, County of Tarrant. Sworn and subscribed before me this 20th day of June, 2008

Notary Public:
Commission Expires:

RACHEL R. MEDINA
Notary Public
State of Texas
My Commission Expires

Trinity Highway Products , LLC
Certified By: Stefanie Oneal

Figure A-31. Anchor Bearing Plate Material Specifications, Test Nos. MGSNB-1 and MGSNB-2

Certified Analysis

Trinity Highway Products , LLC
425 E. O'Connor
Lima, OH
Customer: MIDWEST MACH.& SUPPLY CO.
P. O. BOX 81097

LINCOLN, NE 68501-1097
Project: RESALE

Order Number: 1114174
Customer PO: 2213
BOL Number: 51169
Document #: 1
Shipped To: NE
Use State: NE

As of: 9/16/09

Qty	Part #	Description	Spec	CL	TY	Heat Code/ Heat #	Yield	TS	Elg	C	Mn	P	S	Si	Cu	Cb	Cr	Vn	ACW
750	545G	6'0 POST/DB:DDR	A-36			J86489	50,565	68,830	26.1	0.090	0.950	0.010	0.040	0.200	0.290	0.00	0.160	0.003	4
50	14662G	6'6 POST/8.5#/DB:DDR NB	A-36			J86489	50,565	68,830	26.1	0.090	0.950	0.010	0.040	0.200	0.290	0.00	0.160	0.003	4

Upon delivery, all materials subject to Trinity Highway Products , LLC Storage Stain Policy No. LG-002.

ALL STEEL USED WAS MELTED AND MANUFACTURED IN USA AND COMPLIES WITH THE BUY AMERICA ACT.
ALL GUARDRAIL MEETS AASHTO M-180, ALL STRUCTURAL STEEL MEETS ASTM A36
ALL GALVANIZED MATERIAL CONFORMS WITH ASTM-123, UNLESS OTHERWISE STATED.
BOLTS COMPLY WITH ASTM A-307 SPECIFICATIONS AND ARE GALVANIZED IN ACCORDANCE WITH ASTM A-153, UNLESS OTHERWISE STATED.
NUTS COMPLY WITH ASTM A-563 SPECIFICATIONS AND ARE GALVANIZED IN ACCORDANCE WITH ASTM A-153, UNLESS OTHERWISE STATED.
3/4" DIA CABLE 6X19 ZINC COATED SWAGED END AISI C-1035 STEEL ANNEALED STUD 1" DIA ASTM 449 AASHTO M30, TYPE II BREAKING STRENGTH – 49100 LB

State of Ohio, County of Allen. Sworn and subscribed before me this 16th day of September, 2009
Notary Public:
Commission Expires 1/28/2012

Trinity Highway Products , LLC
Certified By:
Quality Assurance

1 of 1

Figure A-32. BCT Anchor Cable Assembly 3/4-in. (19-mm) Galvanized Wire Rope Material Specifications, Test Nos. MGSNB-1 and MGSNB-2

Jun-16-2009 08:12am From-Portesous Denver 1 303 576 0533 T-510 P.002/003 F-448

1"

Certification provided by:PFC, To:NEBRASKA BOLT Order:124841

FASTENER DIVISION

Telephone 260/337-1600

CUSTOMER NO/NAME
267 PORTEOUS FASTENER CO.
TEST REPORT SERIAL# FB285188
TEST REPORT ISSUE DATE 4/20/07
DATE SHIPPED 10/04/07
NAME OF LAB SAMPLER: SHIRRI STANTZ, LAB TECHNICIAN

NUCOR ORDER # 600934
CUST PART # 00219-4000-004
CUSTOMER P.O. # 17070232

******************CERTIFIED MATERIAL TEST REPORT******************

NUCOR PART NO	QUANTITY	LOT NO.	DESCRIPTION
175407	7200	222445A 1-8	GR DH HV H.D.G.
MANUFACTURE DATE 1/29/07			HEX NUT H.D.G.

--CHEMISTRY MATERIAL GRADE -1045L

MATERIAL NUMBER	HEAT NUMBER	C	MN	P	S	SI
		***CHEMISTRY COMPOSITION (WT% HEAT ANALYSIS) BY MATERIAL SUPPLIER				
RM023446	NU 838828	.45	.69	.013	.021	.18
	MIN	.20	.60			
	MAX	.55		.040	.050	

NUCOR STEEL - NEBRASKA
A2LA NO: 780.01 EXP: 2008-11-30
FOR CHEMICAL TESTING

NU 838828

--MECHANICAL PROPERTIES IN ACCORDANCE WITH ASTM A563-04A

SURFACE HARDNESS (RSBN)	CORE HARDNESS (RC)	PROOF LOAD 90900 LBS	TENSILE STRENGTH (LBS)	DEG-WEDGE STRESS (PSI)
N/A	28.1	PASS	N/A	N/A
N/A	30.8	PASS	N/A	N/A
N/A	31.9	PASS	N/A	N/A
N/A	28.5	PASS	N/A	N/A
N/A	28.9	PASS	N/A	N/A

AVERAGE VALUES FROM TESTS PRODUCTION LOT SIZE 67000 PCS
29.5

ROTATIONAL CAPACITY TESTED IN ACCORDANCE WITH A325, A563 AND F606 TO 360 DEGREES OF ROTATION.
SAMPLE #1 PASSED SAMPLE #2 PASSED

--VISUAL INSPECTION IN ACCORDANCE WITH ASTM A563-04a 88 PCS. SAMPLED LOT PASSED

--COATING - Hot Dip Galvanized.

1.	0.00433	2.	0.00404	3.	0.00356	4.	0.00331	5.	0.00354	6.	0.00468	7.	0.00617
8.	0.00567	9.	0.00341	10.	0.00637	11.	0.00426	12.	0.00495	13.	0.00387	14.	0.00399
15.	0.00395	16.	0.00364	17.	0.00409	18.	0.00342	19.	0.00364	20.	0.00399		

AVERAGE THICKNESS FROM 20 TESTS .00413
HEAT TREATMENT - AUSTENITIZED, OIL QUENCHED & TEMPERED (MIN 880 DEG F)

--DIMENSIONS PER ASME B18.2.6-2003

CHARACTERISTIC	#SAMPLES TESTED	MINIMUM	MAXIMUM
Width Across Corners	8	1.8190	1.8300
Thickness	32	0.9670	0.9830

ALL TESTS ARE IN ACCORDANCE WITH THE LATEST REVISIONS OF THE METHODS PRESCRIBED IN THE APPLICABLE SAE AND ASTM SPECIFICATIONS. THE SAMPLES TESTED CONFORM TO THE SPECIFICATIONS AS DESCRIBED/LISTED ABOVE AND WERE MANUFACTURED FREE OF MERCURY CONTAMINATION.
THE STEEL WAS MELTED AND MANUFACTURED IN THE U.S.A. AND THE PRODUCT WAS MANUFACTURED AND TESTED IN THE U.S.A.
WE CERTIFY THAT THIS DATA IS A TRUE REPRESENTATION OF INFORMATION PROVIDED BY THE MATERIAL SUPPLIER AND OUR TESTING LABORATORY. THIS CERTIFIED MATERIAL TEST REPORT RELATES ONLY TO THE ITEMS LISTED ON THIS DOCUMENT AND MAY NOT BE REPRODUCED EXCEPT IN FULL.

ACCREDITED

MECHANICAL FASTENER
CERTIFICATE NO. A2LA 139-01
EXPIRATION DATE 12/31/07

NUCOR FASTENER
A DIVISION OF NUCOR CORPORATION

Chris Kamer
CHRIS KAMER
QUALITY ASSURANCE SUPERVISOR

Page 1 of 1

Jun 17 2009 9:22 HP LASERJET FAX p.3

Figure A-33. BCT Anchor Cable Assembly 3/4-in. (19-mm) Galvanized Wire Rope Material Specifications (cont.), Test No. MGSNB-1

Certified Analysis

Trinity Highway Products , LLC
2548 N.E. 28th St.
Ft Worth, TX
Customer: MIDWEST MACH.& SUPPLY CO.
P. O. BOX 81097

LINCOLN, NE 68501-1097
Project: RESALE

Order Number: 1095199
Customer PO: 2041
BOL Number: 24481
Document #: 1
Shipped To: NE
Use State: KS

As of: 6/20/08

Qty	Part#	Description	Spec	CL	TY	Heat Code/ Heat #	Yield	TS	Elg	C	Mn	P	S	Si	Cu	Cb	Cr	Vn	ACW
25	6G	12/63/8	M-180 A			84964	64,230	81,300	25.4	0.180	0.720	0.012	0.001	0.040	0.080	0.000	0.060	0.000	4
20	701A	.25X11.75X16 CAB ANC	A-36			4153095	44,900	60,800	34.0	0.240	0.750	0.012	0.003	0.020	0.020	0.000	0.040	0.002	4
10	742G	6"0 TUBE SL/.188X8X6	A-500			A8P1160	74,000	87,000	25.2	0.050	0.670	0.013	0.005	0.030	0.220	0.000	0.060	0.021	4
20	782G	5/8"X8"X8" BEAR PL/OF	A-36			6106195	46,700	69,900	23.5	0.180	0.830	0.010	0.005	0.020	0.230	0.000	0.070	0.006	4
40	907G	12/BUFFER/ROLLED	M-180 A			L0049	54,200	73,500	25.0	0.160	0.700	0.011	0.008	0.020	0.200	0.000	0.100	0.000	4

Upon delivery, all materials subject to Trinity Highway Products , LLC Storage Stain Policy No. LG-002.

ALL STEEL USED WAS MELTED AND MANUFACTURED IN USA AND COMPLIES WITH THE BUY AMERICA ACT.
ALL GUARDRAIL MEETS AASHTO M-180, ALL STRUCTURAL STEEL MEETS ASTM A36
ALL OTHER GALVANIZED MATERIAL CONFORMS WITH ASTM-123.
BOLTS COMPLY WITH ASTM A-307 SPECIFICATIONS AND ARE GALVANIZED IN ACCORDANCE WITH ASTM A-153, UNLESS OTHERWISE STATED.
NUTS COMPLY WITH ASTM A-563 SPECIFICATIONS AND ARE GALVANIZED IN ACCORDANCE WITH ASTM A-153, UNLESS OTHERWISE STATED.

3/4" DIA CABLE 6X19 ZINC COATED SWAGED END AISI C-1035 STEEL ANNEALED STUD 1" DIA ASTM 449 AASHTO M30, TYPE II BREAKING STRENGTH – 49100 LB

State of Texas, County of Tarrant. Sworn and subscribed before me this 20th day of June, 2008

Notary Public:
Commission Expires:

RACHEL R. MEDINA
Notary Public
State of Texas
My Commission Expires

Trinity Highway Products , LLC
Certified By: Stefanie Oneal

Figure A-34. Anchor Bracket Assembly Material Specifications, Test Nos. MGSNB-1 and MGSNB-2

EXLTUBE

905 ATLANTIC STREET, NORTH KANSAS CITY, MO 64116 1-816-474-5210 TOLL FREE 1-800-892-TUBE

STEEL VENTURES, LLC dba EXLTUBE

CERTIFIED TEST REPORT

Customer:	Size:	Spec No:	Date:
SPS - New Century 401 New Century Parkway New Century KS 66031	02.375	ASTM A500-07, A53E-07	05/22/2008
	Gauge: .154	Grade: A500B,C, A53BNT	Customer Order No: 4500104158
			B/L No: 81162893

Heat No	Yield P.S.I.	Tensile P.S.I.	Elongation % 2 inch
280638	61,500	66,400	23.00

SLEEVE MAT CRT

Heat No	C	MN	P	S	SI	CU	NI	CR	MO	V
280638	0.040	0.330	0.010	0.000	0.034	0.098	0.039	0.042	0.015	0.003

We hereby certify that the above material was manufactured in the U.S.A and that all test results shown in this report are correct as contained in the records of our company. All testing and manufacturing is in accordance to A.S.T.M. parameters encompassed within the scope of the specifications denoted in the specification and grade tiles above.

BNT=Grade B not tested - meets tensile properties ONLY.

STEEL VENTURES, LLC dba EXLTUBE

Steve Frerichs
Quality Assurance Manager

104158

Figure A-35. 6-in. (152-mm) Long BCT Post Sleeve Material Specifications, Test Nos. MGSNB-1 and MGSNB-2

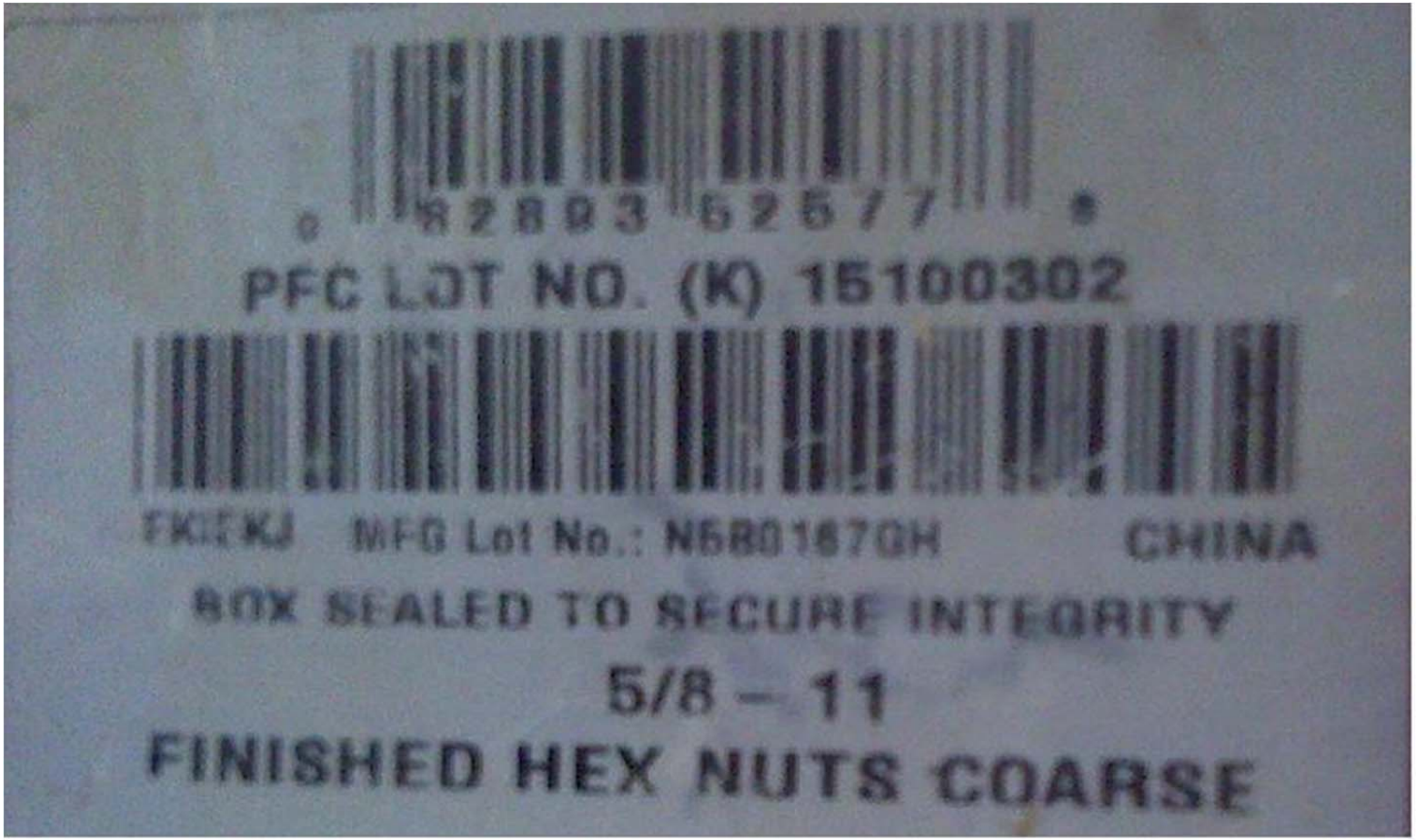

Figure A-36. 5/8-in. (16-mm) Diameter Hex Head Nut Material Specifications, Test Nos. MGSNB-1 and MGSNB-2

425 E. O'Connor
Lima, OH

PAGE 44/52

Customer: MIDWEST MACH.& SUPPLY CO.
P. O. BOX 81097

LINCOLN, NE 68501-1097

Sales Order: 1093497
Customer PO: 2030
BOL # 43073
Document # 1

Print Date: 6/30/08
Project: RESALE
Shipped To: NE
Use State: KS

Trinity Highway Products, LLC

Certificate Of Compliance For Trinity Industries, Inc. ** SLOTTED RAIL TERMINAL **

NCHRP Report 350 Compliant

MIDWEST MACHINERY

Pieces	Description
32	12/12'6/S SRT-1
32	12/25'0/SPEC/S SRT-2
32	3/16X12.5X16 CAB ANC BRKT
32	2" X 5 1/2" PIPE (LONG)
64	6'0 TUBE SL/.188X8X6
32	5/8 X 6 X 8 BEARING PLATE
32	12/BUFFER/ROLLED
32	CBL 3/4X6'6/DBL SWG/NOHWD
640	5/8" RD WASHER 1 3/4 OD
1,728	5/8" GR HEX NUT
1,152	5/8"X1.25" GR BOLT
256	5/8"X1.5" HEX BOLT A307
64	5/8"X9.5" HEX BOLT A307

Upon delivery, all materials subject to Trinity Highway Products , LLC Storage Stain Policy No. LG-002.

ALL STEEL USED WAS MELTED AND MANUFACTURED IN USA AND COMPLIES WITH THE BUY AMERICA ACT
ALL GUARDRAIL MEETS AASHTO M-180, ALL STRUCTURAL STEEL MEETS ASTM A36
ALL OTHER GALVANIZED MATERIAL CONFORMS WITH ASTM-123.
BOLTS COMPLY WITH ASTM A-307 SPECIFICATIONS AND ARE GALVANIZED IN ACCORDANCE WITH ASTM A-153, UNLESS OTHERWISE STATED.
NUTS COMPLY WITH ASTM A-563 SPECIFICATIONS AND ARE GALVANIZED IN ACCORDANCE WITH ASTM A-153, UNLESS OTHERWISE STATED.
1/4" DIA CABLE 6X19 ZINC COATED SWAGED END AISI C-1035 STEEL ANNEALED STUD 1" DIA ASTM 449 AASHTO M30, TYPE II BREAKING
STRENGTH – 49100 LB
State of Ohio, County of Allen. Sworn and Subscribed before me this 30th day of June, 2008

Notary Public:
Commission Expires

Trinity Highway Products, LLC
Certified By:

Figure A-37. 10-in. (254-mm) Long Hex Head Bolt Material Specifications, Test Nos. MGSNB-1 and MGSNB-2

05/04/2009 16:36 402-761-3288

TRINITY HIGHWAY PRODUCTS, LLC.
425 E. O'CONNOR AVENUE
LIMA, OHIO 45801
419-227-1296

MATERIAL CERTIFICATION

CUSTOMER: STOCK	DATE: JANUARY 2, 2008
	INVOICE #:
	LOT #: 961229E
PART NUMBER: 3380G	QUANTITY: 103,182
DESCRIPTION: 5/8" X 1 ½ HH BOLT	DATE SHIPPED:
SPECIFICATIONS: ASTM A307-A/A153	HEAT #: 443270 & 446650

MATERIAL CHEMISTY

C	MN	P	S	SI	CU	NI	CR	MO	AL	V	N	CB	SN	B	TI	NB
.09	.38	.006	.009	.100	.09	.06	.06	.02	.032	.001	.0060	.000	.005	.0001	.001	.001
.09	.39	.007	.010	.090	.08	.05	.07	.02	.023	.001	.0070	.000	.006	.0001	.001	.001

PLATING AND/OR PROTECTIVE COATING

HOT DIP GALVANIZING (OZ. PER SQ. FT.)	1.25 AVG.

****THIS PRODUCT WAS MANUFACTURED IN THE UNITED STATES OF AMERICA***

THE MATERIAL USED IN THIS PRODUCT WAS MELTED AND MANUFACTURED IN THE U.S.A.

WE HEREBY CERTIFY THAT TO THE BEST OF OUR KNOWLEDGE ALL INFORMATION CONTAINED HEREIN IS CORRECT.

TRINITY HIGHWAY PRODUCTS, LLC.

STATE OF OHIO, COUNTY OF ALLEN
SWORN AND SUBSCRIBED BEFORE ME
THIS 2ND DAY OF JANUARY, 2008

NOTARY PUBLIC

425 E. O'CONNOR AVENUE LIMA, OHIO 45801 419-227-1296

Figure A-38. 5/8-in (16-mm) Diameter x 1 ½-in (38-mm) Long Hex Head Bolt Material Specifications, Test Nos. MGSNB-1 and MGSNB-2

06/04/2009 16:36 402-761-3288 MIDWEST MACHINERY

From TRINITY METALS LABORATORY To CHERITY A MASON 12:29:54 PM 11/20/2007 Page 9 of 13

TRINITY METALS LABORATORY

Page 1 of 1

A DIVISION OF TRINITY INDUSTRIES
4001 IRVING BLVD 75247 - P.O. BOX 568887
DALLAS, TX 75356-8887
Phone: 214-589-7591 FAX: 214-589-7594

LABORATORY TEST CERTIFICATE

Lab. No. : **7110450F**

CHERITY A. MASON
TRINITY HWY PRODUCTS, LLC #55
ROLLFORM - 425 E. O'CONNOR AVENUE

LIMA, OH 45801

Received Date : 11/19/2007
Heat Code :
Heat Number : 843270 & 848858
P.O. or Work Order : LOT#: 0612258
Other Information : SO#: 55-39193
Test Specification : F606-ASTM METHODS
Material Type : A 307 A
Material Size : 5/8" x 1-1/2" HHB
Weld Specification :
Completion Date : 11-20-2007

TESTS/ADDITIONAL INFORMATION

Test Type/Additional Information: HARDNESS ROCKWELL BW — Quantity : 5.00
Findings: A) 91 - 89 - 90 - 90
B) 91 - 91 - 91 - 91
C) 91 - 90 - 91 - 90
D) 88 - 88 - 89 - 88
E) 92 - 91 - 91 - 91

Test Type/Additional Information: HEAD MARKINGS — Quantity : 0.00
Findings: TRN USA 307A

We certify the above results to be a true and accurate representation of the sample(s) submitted. Alteration or partial reproduction of this report will void certification.
LAB DIRECTOR : Michael S. Beaton, P.E.

Date : 11/20/2007

Figure A-39. 5/8-in (16-mm) Diameter x 1 ½-in (38-mm) Long Hex Head Bolt Material Specifications (cont.), Test Nos. MGSNB-1 and MGSNB-2

06/04/2009 16:36 402-761-3288 MIDWEST MACHINERY PAGE 33/52

CHARTER STEEL SALE

CHARTER STEEL

FILE

08:38:02 10-06-2006 1 /6

1658 Cold Springs Road
Saukville, Wisconsin 53080
(262) 268-2400
1-800-437-8789
FAX (262) 268-2570

A Division of
Charter Manufacturing Company, Inc.

CHARTER STEEL TEST REPORT
Reverse Has Text And Codes

Trinity Industries, Inc.
P.O. Box 568887
2525 Stemmons Freeway
Dallas,TX 75358-8887
Attn: Attn: Cheri/Carol

[illegible]	122335M
[illegible]	1009418
[illegible]	223872
[illegible]	449270
[illegible]	360176
[illegible]	1010 A AK FG RHQ
[illegible]	HR
[illegible]	41/64

I hereby certify that the material described herein has been manufactured in accordance with the specifications and standards listed below and on the reverse side, and that it satisfies those requirements.

Test Results of Heat Lot# 449270

Lab Code: 7388

Chemistry	C	MN	P	S	SI	NI	CR	MO	CU	SN	V
Wt%	0.59	0.38	0.008	0.003	0.700	0.06	0.06	0.02	0.09	0.005	0.001
	AL	N	B	TI	NB						
	0.032	0.0060	0.0001	0.001	0.001						

CHEM. DEVIATION EXT.- GREEN = N/R

Test Results of Rolling Lot 0355176

	# of Tests	Min Value	Max Value	Mean Value	
ROCKWELL B (HRBW)	2	63	64	63	RB LAB = 0355-02
ROCKWELL C (HRC)	0	0	0	0	RC LAB = N/R

QC DEVIATION EXT.- GREEN = N/R

Test Results of Processing Lot 0

QC DEVIATION EXT.- PROCESSED = N/R

Specifications: Meets customer specifications with any applicable Charter Steel exceptions for the following customer documents:
Customer Document = Revision = Dated =

Additional Comments: MELTED AND MANUFACTURED IN THE USA

Charter Steel
Saukville, WI, USA

Fax number: (419) 227-9999 Rem: Lasso,Mello,Fazo

Page 1 of 1

Tim Leahy
Manager of Quality Assurance
10/06/2006

Figure A-40. 5/8-in (16-mm) Diameter x 1 ½-in (38-mm) Long Hex Head Bolt Material Specifications (cont.), Test Nos. MGSNB-1 and MGSNB-2

06/04/2009 16:36 402-761-3288 MIDWEST MACHINERY

CHARTER STEEL SALE 15:04:15 10-19-2006 1/5

FAX

CHARTER STEEL

A Division of
Charter Manufacturing Company, Inc

CHARTER STEEL TEST REPORT
Reverse Has Text And Codes

1658 Cold Springs Road
Saukville, Wisconsin 53080
(262) 268-2400
1-800-437-8789
FAX (262) 268-2570

Trinity Industries, Inc.
P.O. Box 568887
2525 Stommons Freeway
Dallas, TX 75356-8887
Attn: Attn: Cheri/Carol

Cust PO	122576M
Cust Part #	1009418
Charter Sales Order	225779
Heat #	446650
Ship Lot #	351188
Grade	1010 A AK FG RHO
Finish	HR
Bars Size	41/64

I hereby certify that the material described herein has been manufactured in accordance with the specifications and standards listed below and on the reverse side, and that it satisfies those requirements.

Test Results of Heat Lot# 446650

Lab Code: 7368

Chemistry	C	MN	P	S	SI	NI	CR	MO	CU	SN	V
Wt%	0.09	0.38	0.007	0.010	0.080	0.05	0.07	0.02	0.09	0.006	0.001

AL	N	B	TI	NB
0.023	0.0070	0.0001	0.001	0.001

CHEM. DEVIATION EXT.-GREEN = N/R

Test Results of Rolling Lot # 351188

	# of Tests	Min Value	Max Value	Mean Value	
ROCKWELL B (HRBW)	3	62	62	62	RB LAB = 0858-02
ROCKWELL C (HRC)	0	0	0	0	RC LAB = N/R

QC DEVIATION EXT.-GREEN = N/R

Test Results of Processing Lot #

QC DEVIATION EXT.-PROCESSED = N/R

Specifications: Meets customer specifications with any applicable Charter Steel exceptions for the following customer documents: Customer Document # Revision # Dated #

Additional Comments: MELTED AND MANUFACTURED IN THE USA

Charter Steel
Saukville, WI, USA

ACCREDITED

Tim Leahy
Manager of Quality Assurance
10/19/2006

Fax number: (419) 227-9939 Rem: Lead1,Mail0,Fax1 Page 1 of 1

Figure A-41. 5/8-in (16-mm) Diameter x 1 ½-in (38-mm) Long Hex Head Bolt Material Specifications (cont.), Test Nos. MGSNB-1 and MGSNB-2

06/04/2009 16:36 402-761-3288 MIDWEST MACHINERY PAGE 35/52

262 268 2570 CHARTER STEEL SALE 15:05:58 10-19-2006 5 /8

The following statements are applicable to the material described on the front of this Test Report:

1. Except as noted, the steel supplied for this order was melted, rolled and processed in the United States.
2. Mercury was not used during the manufacture of this product; nor was the steel contaminated with mercury during processing.
3. Unless directed by the customer, there are no welds in any of the coils produced for this order.
4. The laboratory that generated the analytical or test results can be identified by the following key:

Certificate Number	Lab Code	Laboratory		Address
0358-01	7386	CSMD	Charter Steel Melting Division	1658 Cold Springs Road, Saukville, WI 53080
0358-02	8171	CSRD/ CSPD	Charter Steel Rolling/ Processing Division	1658 Cold Springs Road, Saukville, WI 53080
0358-03	123833	P4	Charter Steel Ohio Processing Division	8255 US Highway 23, Risingsun, OH 43457
0358-04	125544	CSC	Charter Steel Cleveland	4900 E. 49th St., Cuyahoga Heights, OH 44125-1004
*	*	--	Subcontracted test performed by laboratory not in Charter Steel system	

5. When run by a Charter Steel laboratory, the following tests were performed according to the latest revisions of the specifications listed below, as noted in the Charter Steel Laboratory Quality Manual:

Test	Possible Laboratory	Specification
Chemistry Analysis	CSMD	ASTM E415; ASTM E1019
Macroetch	CSMD	ASTM E381
Hardenability (Jominy)	CSMD	ASTM A255; JIS G0561
Grain Size	CSMD	ASTM E112
Tensile Test	CSRD/CSPD, P4, CSC	ASTM E8; ASTM A370
Rockwell Hardness	CSRD/CSPD, P4, CSC	ASTM E18; ASTM A370
Microstructure (spheroidization)	CSRD/CSPD, P4	ASTM A892
Cleanliness	CSRD/CSPD, CSC	ASTM E45

Charter Steel has been accredited to perform all of the above tests by the American Association for Laboratory Accreditation (A2LA). These accreditations expire 01/31/07

All other test results associated with a Charter Steel laboratory that appear on the front of this report, if any, were performed according to documented procedures developed by Charter Steel and are not accredited by A2LA.

6. The test results on the front of this report are the true values measured on the samples taken from the production lot. They do not apply to any other sample.
7. This test report cannot be reproduced or distributed except in full without the written permission of Charter Steel. The primary customer whose name and address appear on the front of this form may reproduce this test report, subject to the following restrictions:
   - It may be distributed only to their customers
   - Both sides of all pages must be reproduced in full
8. This certification is given subject to the terms and conditions of sale provided in Charter Steel's acknowledgment (designated by our Purchase Order number) to the customer's purchase order. Both Purchase Order numbers appear on the front page of this Report.
9. Where the customer has provided a specification, the results on the front of this test report conform to that specification unless otherwise noted on this test report.

ACCREDITED

Figure A-42. 5/8-in (16-mm) Diameter x 1 ½-in (38-mm) Long Hex Head Bolt Material Specifications (cont.), Test Nos. MGSNB-1 and MGSNB-2

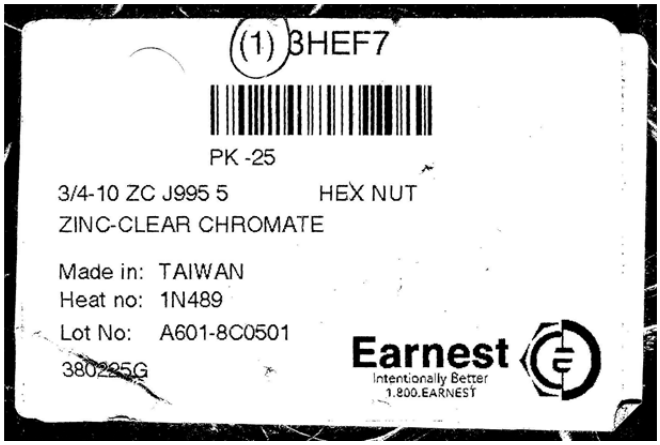

Figure A-43. 7/8-in. (22-mm) Diameter Hex Head Nut Material Specifications, Test Nos. MGSNB-1 and MGSNB-2

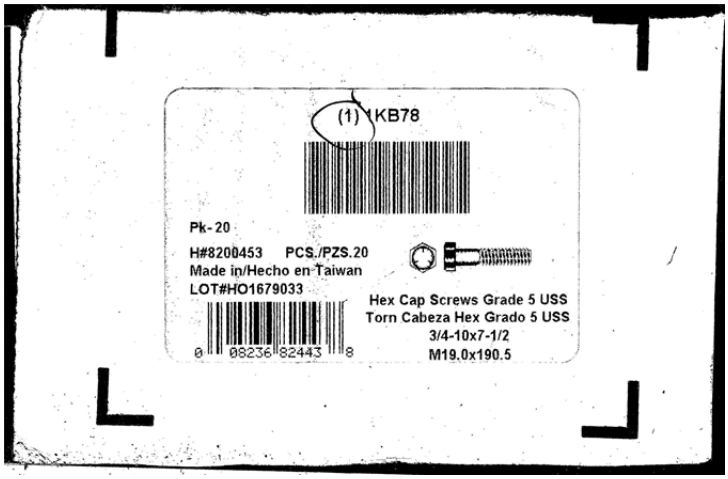

Figure A-44. 7/8-in (22-mm) Diameter x 7 ½-in. (191-mm) Long Hex Head Bolt Material Specifications, Test Nos. MGSNB-1 and MGSNB-2

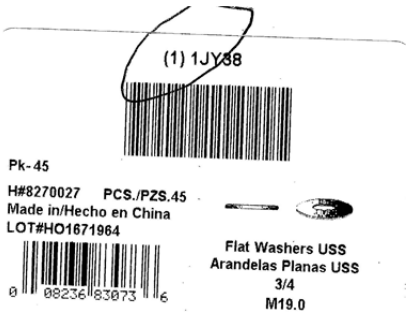

Figure A-45. 7/8-in. (22-mm) Diameter Flat Washer Material Specifications, Test Nos. MGSNB-1 and MGSNB-2

Certified Analysis

Trinity Highway Products , LLC
550 East Robb Ave.
Lima, OH 45801
Customer: MIDWEST MACH.& SUPPLY CO.
P. O. BOX 703

MILFORD, NE 68405
Project: RESALE

Order Number: 1145215
Customer PO: 2441
BOL Number: 61905
Document #: 1
Shipped To: NE
Use State: KS

As of: 4/15/11

Qty	Part #	Description	Spec	CL	TY	Heat Code/ Heat #	Yield	TS	Elg	C	Mn	P	S	Si	Cu	Cb	Cr	Vn	ACW
25	980G	T10/END SHOE/SLANT	A-1011-SS			A57723	49,000	64,500	34.8	0.080	0.350	0.018	0.005	0.020	0.090	0.00	0.060	0.001	4

Upon delivery, all materials subject to Trinity Highway Products , LLC Storage Stain Policy No. LG-002.
ALL STEEL USED WAS MELTED AND MANUFACTURED IN USA AND COMPLIES WITH THE BUY AMERICA ACT.
ALL GUARDRAIL MEETS AASHTO M-180, ALL STRUCTURAL STEEL MEETS ASTM A36
ALL COATINGS PROCESSES OF THE STEEL OR IRON ARE PERFORMED IN USA AND COMPLIES WITH THE "BUY AMERICA ACT"
ALL GALVANIZED MATERIAL CONFORMS WITH ASTM-123, UNLESS OTHERWISE STATED.
BOLTS COMPLY WITH ASTM A-307 SPECIFICATIONS AND ARE GALVANIZED IN ACCORDANCE WITH ASTM A-153, UNLESS OTHERWISE STATED.
NUTS COMPLY WITH ASTM A-563 SPECIFICATIONS AND ARE GALVANIZED IN ACCORDANCE WITH ASTM A-153, UNLESS OTHERWISE STATED.
WASHERS COMPLY WITH ASTM F-436 SPECIFICATION AND/OR F-844 AND ARE GALVANIZED IN ACCORDANCE WITH ASTM F-2329.
3/4" DIA CABLE 6X19 ZINC COATED SWAGED END AISI C-1035 STEEL ANNEALED STUD 1" DIA ASTM 449 AASHTO M30, TYPE II BREAKING STRENGTH – 49100 LB

State of Ohio, County of Allen, Sworn and subscribed before me this 15th day of April, 2011
Notary Public:
Commission Expires 1 23 2016

STATE OF OHIO
ANGELA COUNTS
NOTARY PUBLIC
ID# 2011NT0014
Commission Expires
January 23, 2016
AUGLAIZE COUNTY

Trinity Highway Products , LLC
Certified By:
Quality Assurance

2 of 2

Figure A-46. Cable Anchor Assembly Black Paint, Test No. MGSNB-2

Appendix B. Vehicle Center of Gravity Determination

Test: MGSNB-1 Vehicle: 2270P/Ram 1500

Vehicle CG Determination

VEHICLE	Equipment	Weight (lb)	Long CG (in.)	Lat CG (in.)	Vert CG (in.)	Long M (lb-in.)	Lat M (lb-in.)	Vert M (lb-in.)
+	Unbalasted Truck(Curb)	4955	61.62333	-0.34931	28.59149	305343.6	-1730.81	141670.8
+	Brake receivers/wires	9	107	0	52	963	0	468
+	Brake Frame	5	36	-17	26	180	-85	130
+	Brake Cylinder (Nitrogen)	27	69	-23	25.5	1863	-621	688.5
+	Strobe/Brake Battery	4	78.5	0	30.5	314	0	122
+	Hub	27	0	-43	14.8125	0	-1161	399.9375
+	CG Plate (EDRs)	8	60	0	32	480	0	256
-	Battery	-46	-7	-25	41	322	1150	-1886
-	Oil	-15	10	2	16	-150	-30	-240
-	Interior	-45	50	0	23	-2250	0	-1035
-	Fuel	-142	112.5	-11	19	-15975	1562	-2698
-	Coolant	0				0	0	0
-	Washer fluid	-7	-15	18	36	105	-126	-252
BALLAST	Water	200	112.5	-11	19	22500	-2200	3800
	Misc.					0	0	0
	Misc.					0	0	0
						313695.6	-3241.81	141424.3
	TOTAL WEIGHT	4980 lb			CG location (in.)	62.99109	-0.65097	28.39844

wheel base 140.25

Calculated Test Inertial Weight

MASH Targets	Targets	CURRENT	Difference
Test Inertial Weight (lb)	5000 ± 110	4980	-20.0
Long CG (in.)	63 ± 4	62.99	-0.00891
Lat CG (in.)	NA	-0.65	NA
Vert CG (in.)	28	28.40	0.39844

Note: Long. CG is measured from front axle of test vehicle

Note: Lateral CG measured from centerline - positive to vehicle right (passenger) side

Curb Weight (lb)

	Left	Right
Front	1410	1368
Rear	1093	1084
FRONT	2778 lb	
REAR	2177 lb	
TOTAL	4955 lb	

Actual test inertial weight (lb)
(from scales)

	Left	Right
Front	1410	1350
Rear	1135	1116
FRONT	2760 lb	
REAR	2251 lb	
TOTAL	5011 lb	

Figure B-1. Vehicle Mass Distribution, Test No. MGSNB-1

Test: MGSNB-2 Vehicle: Rio

Vehicle CG Determination

VEHICLE	Equipment	Weight (lb)	Long CG (in.)	Lat CG (in.)	Long M (lb-in.)	Lat M (lb-in.)
+	Unbalasted Car	2375	33.57	-0.28	79724.25	-654.063
+	Brake receivers/wires	6	130.5	0	783	0
+	Brake Frame	6	27	-12.25	162	-73.5
+	Brake Cylinder	22	63	14.5	1386	319
+	Strobe Battery	5	56.5	0	282.5	0
+	Hub	20	0	-36	0	-720
+	CG Plate (EDRs)	7		0	0	0
+	DTS	18	61	-13.5	1098	-243
-	Battery	-34	-9	-15	306	510
-	Oil	-6	-5	9	30	-54
-	Interior	-30	39	0	-1170	0
-	Fuel				0	0
-	Coolant	-9	-19.5	0	175.5	0
-	Washer fluid				0	0
BALLAST	Water	40	82	-4	3280	-160
	Misc.				0	0
	Misc.				0	0
					86057.25	-1075.56
	TOTAL WEIGHT	2420 lb		CG location (in.)	35.56085	-0.44445

wheel base 95.25 in.

MASH targets		CURRENT	Difference
Test Inertial Wt (lb)	2420 (+/-)55	2420	0.0
Long CG (in.)	39 (+/-)4	35.56	-3.43915
Lateral CG (in.)	N/A	-0.44	NA

Note: Long. CG is measured from front axle of test vehicle

Note: Lateral CG measured from centerline - positive to vehicle right (passenger) side

Dummy = 166lbs.

Curb Weight (lb)	Left	Right
Front	737	801
Rear	462	375
FRONT	1538 lb	
REAR	837 lb	
TOTAL	2375 lb	

Actual test inertial weight (lb) (from scales)	Left	Right
Front	749	729
Rear	467	463
FRONT	1478 lb	
REAR	930 lb	
TOTAL	2408 lb	

Figure B-2. Vehicle Mass Distribution, Test No. MGSNB-2

Appendix C. Static Soil Tests

Dynamic Set up

Post-Test Photo of Post

Static Load Test

Post-Test Photo of Post

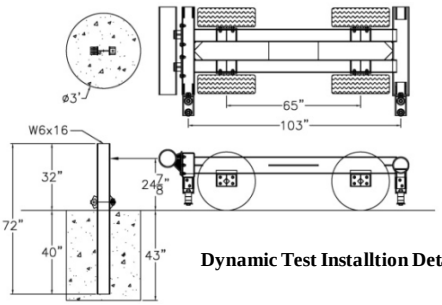

Dynamic Test Installtion Details

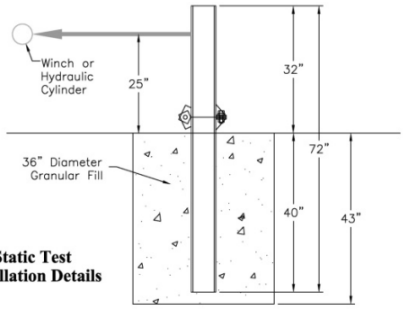

Static Test Installation Details

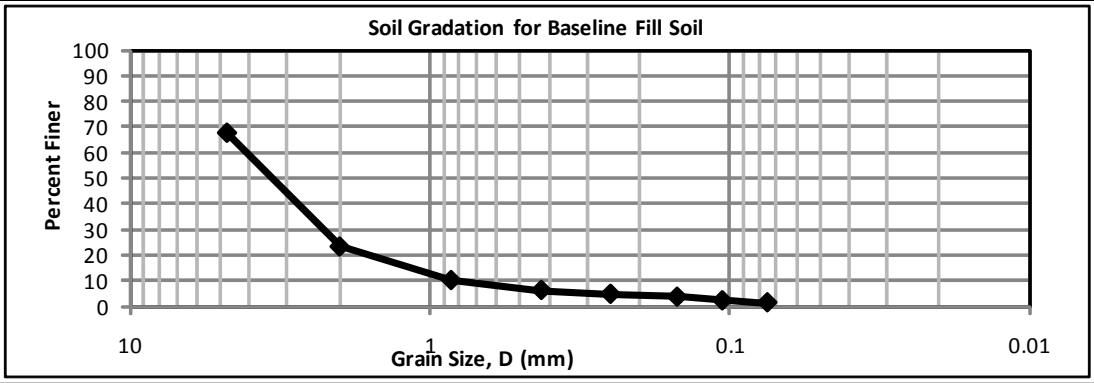

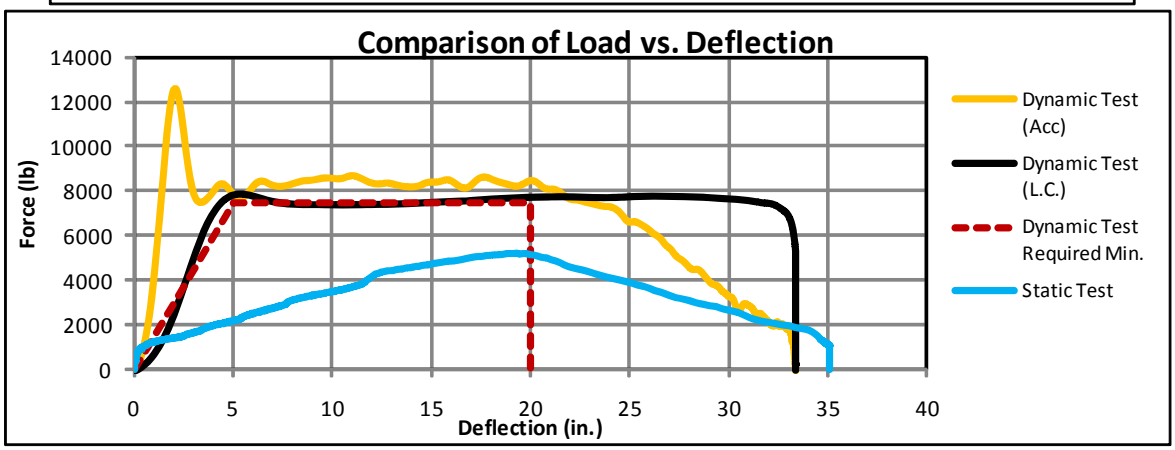

Date.....	6/23/2005
Test Facility & Site Location.....	Midwest Roadside Safety Facility
In situ soil description (ASTM D2487).....	Well Graded Gravel (GW)
Fill material description (ASTM D2487).....	Well Graded Gravel (GW) (see sieve analyses above)
Description of fill placement procedure.....	pnumatic tamper
Bogie Weight.....	1,605 lb
Impact Velocity.....	19.7 mph

Figure C-1. Summary Sheet for Strong Soil Test Results, Test No. MGSNB-1

Static Load Test Setup

Post-Test Photo of Post

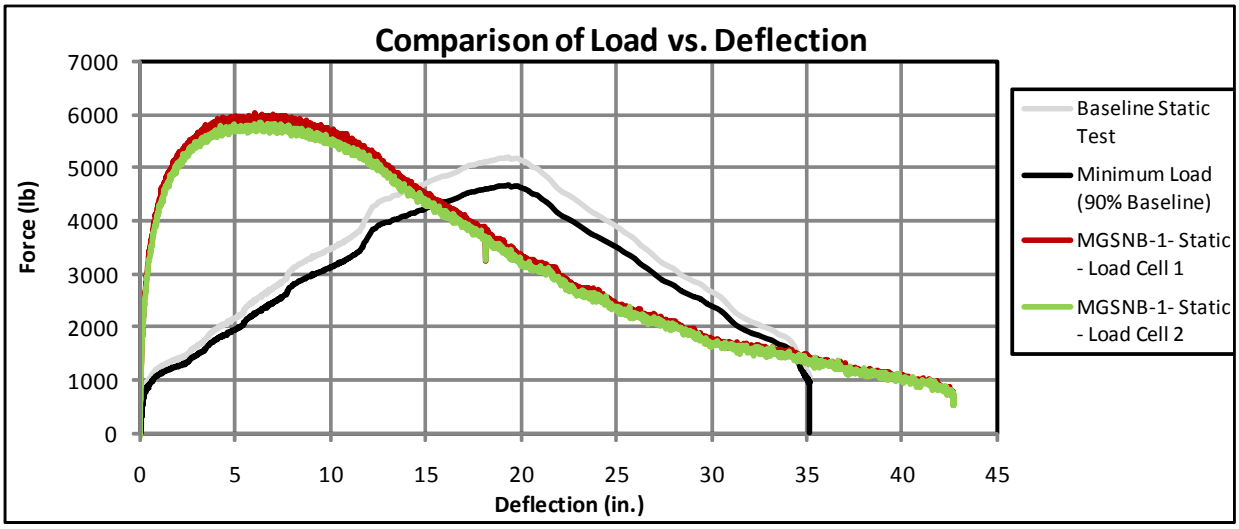

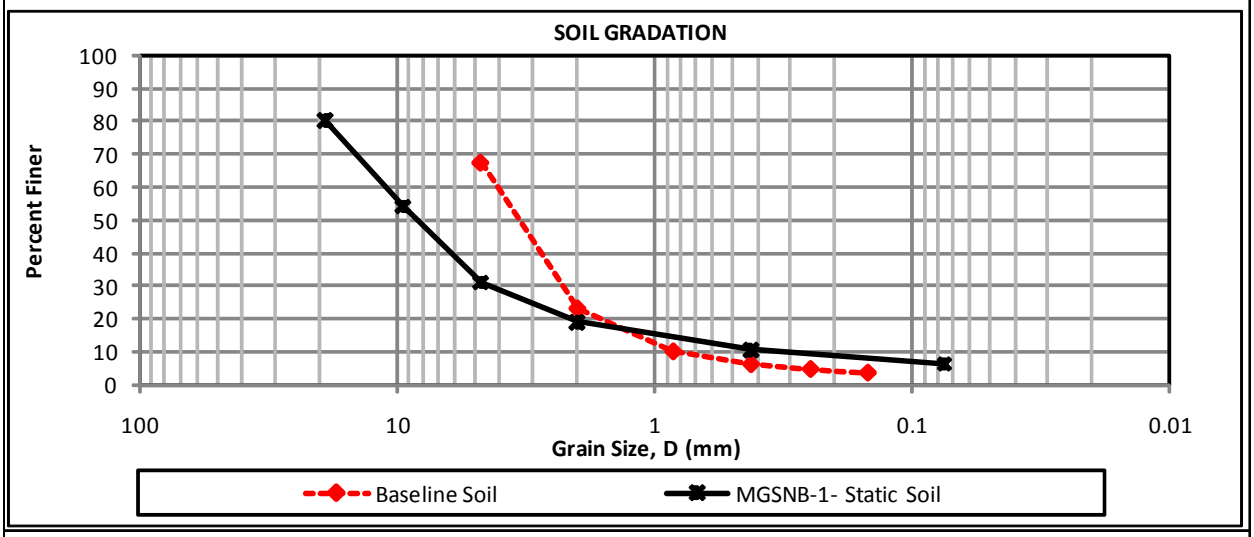

Date.....	5/17/2011
Test Facility & Site Location.....	Midwest Roadside Safety Facility
In situ soil description (ASTM D2487).....	Well Graded Gravel (GW)
Fill material description (ASTM D2487).....	Well Graded Gravel (GW) (see sieve analyses above)
Description of fill placement procedure.....	8-inch lifts tamped with a pneumatic compactor

Figure C-2. Test Day Static Soil Strength, Test No. MGSNB-1

Dynamic Set up

Post-Test Photo of Post

Static Load Test

Post-Test Photo of Post

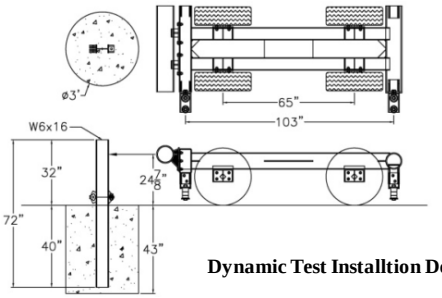

Dynamic Test Installtion Details

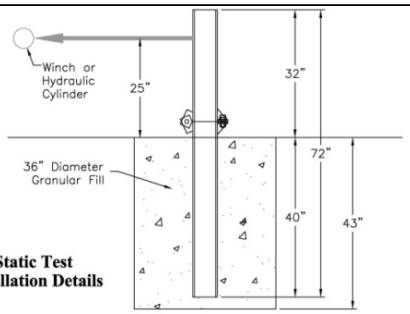

Static Test Installation Details

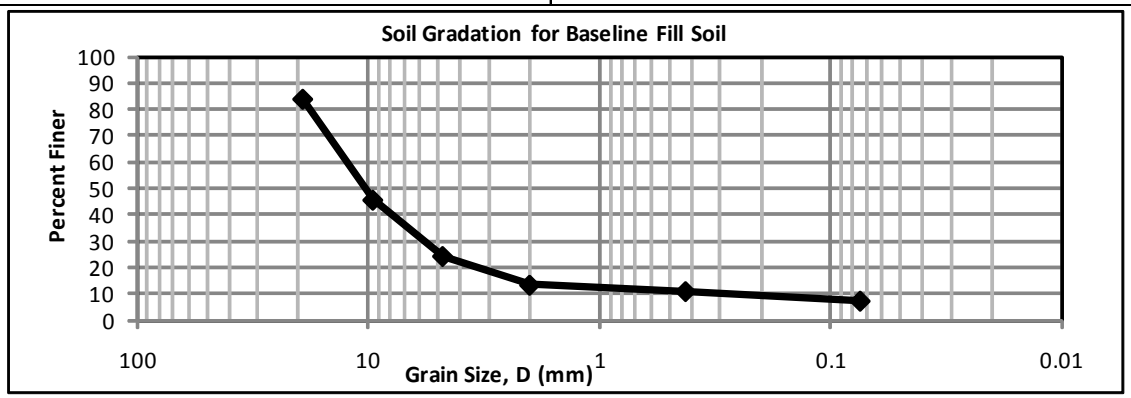

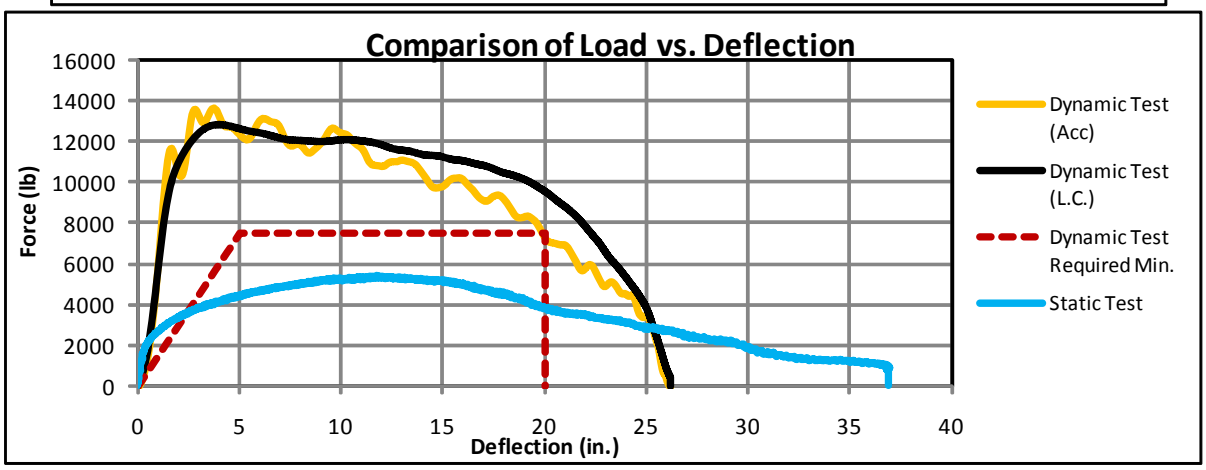

Date.....	3/28/2011
Test Facility & Site Location.....	Midwest Roadside Safety Facility
In situ soil description (ASTM D2487).....	Well Graded Gravel (GW)
Fill material description (ASTM D2487).....	Well Graded Gravel (GW) (see sieve analyses above)
Description of fill placement procedure.....	8-in. Lifts, High Compaction, Pnuematic Tamper
Bogie Weight.....	1,727 lb
Impact Velocity.....	18.81 mph

Figure C-3. Summary Sheet for Strong Soil Test Results, Test No. MGSNB-2

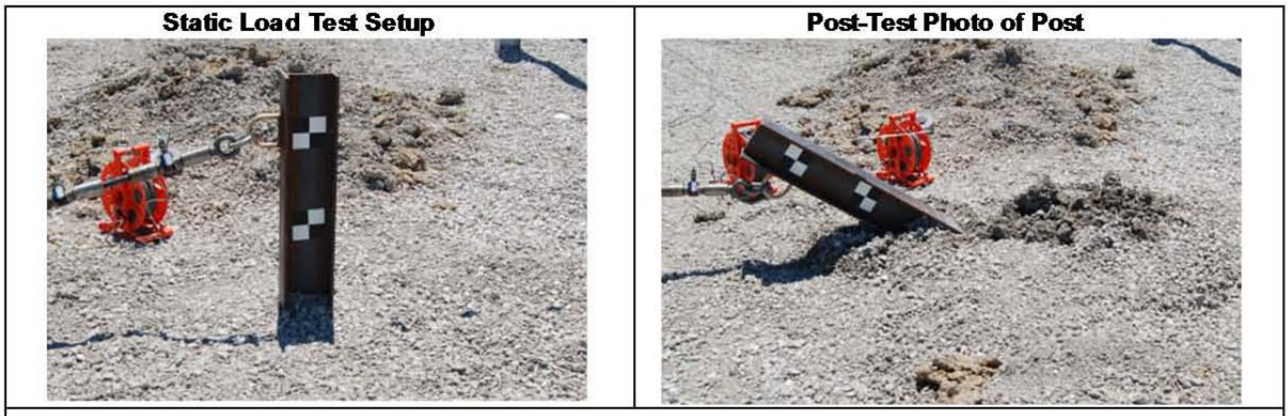

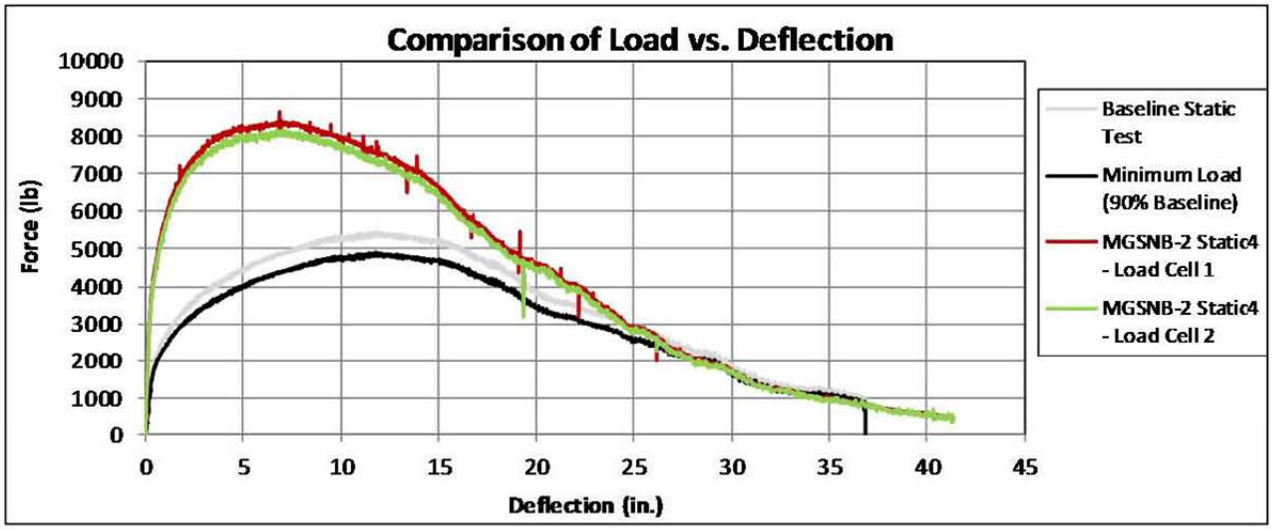

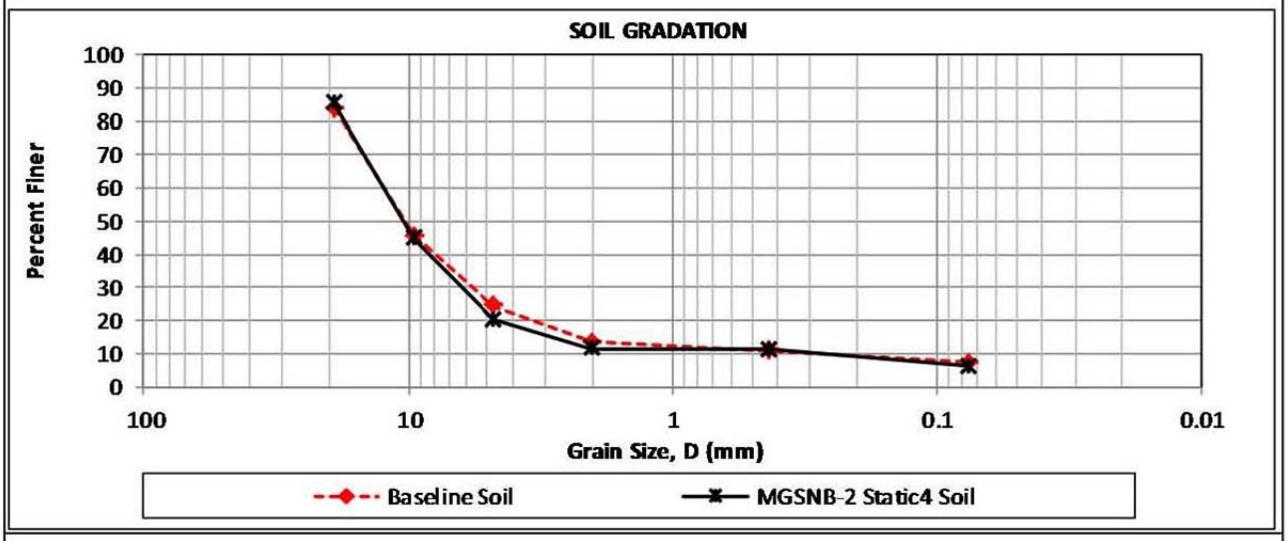

Date	6/15/2011
Test Facility & Site Location	Midwest Roadside Safety Facility
In situ soil description (ASTM D2487)	Well Graded Gravel (GW)
Fill material description (ASTM D2487)	Well Graded Gravel (GW) (see sieve analyses above)
Description of fill placement procedure	8-inch lifts tamped with a pneumatic compactor

Figure C-4. Test Day Static Soil Strength, Test No. MGSNB-2

Appendix D. Vehicle Deformation Records

VEHICLE PRE/POST CRUSH
FLOORPAN - SET 1

TEST: MGSNB-1
VEHICLE: 2270P/Ram 1500

Note: If impact is on driver side need to enter negative number for Y

POINT	X (in.)	Y (in.)	Z (in.)	X' (in.)	Y' (in.)	Z' (in.)	ΔX (in.)	ΔY (in.)	ΔZ (in.)
1	24 1/4	8 3/4	0	25	8 3/4	0	3/4	0	0
2	25 1/4	12 3/4	-1 1/2	25 1/4	12 1/2	-1 1/2	0	- 1/4	0
3	26 1/2	18 1/2	-6 3/4	26 1/2	18 1/2	-6 3/4	0	0	0
4	27	26	-6 3/4	26 1/2	26 1/4	-6 1/2	- 1/2	1/4	1/4
5	16 1/2	1	-3 1/4	16 1/2	1	-3 1/2	0	0	- 1/4
6	17 1/2	8 1/2	-3 1/2	17 1/2	8 3/4	-3 1/2	0	1/4	0
7	18 3/4	12 1/4	-5 1/2	18 1/2	12 1/2	-5 1/2	- 1/4	1/4	0
8	20 1/2	18 3/4	-10	20 1/2	18 1/2	-10	0	- 1/4	0
9	20 1/2	26 1/4	-9 3/4	20 1/2	26 1/4	-9 3/4	0	0	0
10	12 3/4	1	-3 1/2	13	1	-3 1/2	1/4	0	0
11	13 1/2	8 1/4	-4 1/4	13 1/2	8 1/2	-4 1/4	0	1/4	0
12	15	11 1/4	-9 1/2	15	11	-9 1/2	0	- 1/4	0
13	15 1/4	18 1/4	-10	15 1/4	18 1/4	-10	0	0	0
14	15 1/2	25 3/4	-10	15 1/4	25 3/4	-9 3/4	- 1/4	0	1/4
15	8 1/2	1	-3 3/4	8 1/2	1	-3 3/4	0	0	0
16	9	8 3/4	-4 1/2	9	9	-4 3/4	0	1/4	- 1/4
17	10 1/4	11 1/2	-9 3/4	10 1/2	11	-9 3/4	1/4	- 1/2	0
18	10 1/4	18	-9 3/4	10 1/2	17 1/2	-9 3/4	1/4	- 1/2	0
19	10 1/4	25 3/4	-9 1/2	10 1/2	25 1/2	-9 1/2	1/4	- 1/4	0
20	4 3/4	3/4	-4	4 3/4	3/4	-4	0	0	0
21	5 3/4	9	-5	5 3/4	8 3/4	-5	0	- 1/4	0
22	6 1/4	11 3/4	-9 3/4	6 1/4	11 1/2	-9 3/4	0	- 1/4	0
23	6 1/2	18 3/4	-9 1/2	6 1/2	18	-9 1/2	0	- 3/4	0
24	6 1/2	26	-9 1/2	6 1/2	25 1/2	-9 1/2	0	- 1/2	0
25	1 1/4	3/4	-3 1/4	1 1/4	3/4	-3 1/4	0	0	0
26	1 1/2	9	-4	1 1/2	9	-4	0	0	0
27	1	11 3/4	-5 1/2	1	11 1/2	-5 1/2	0	- 1/4	0
28	1	18 1/4	-5 1/4	1	18	-5 1/4	0	- 1/4	0
29	1 1/4	25 1/2	-5 1/4	1 1/4	25 1/2	-5 1/4	0	0	0
30							0	0	0
31							0	0	0

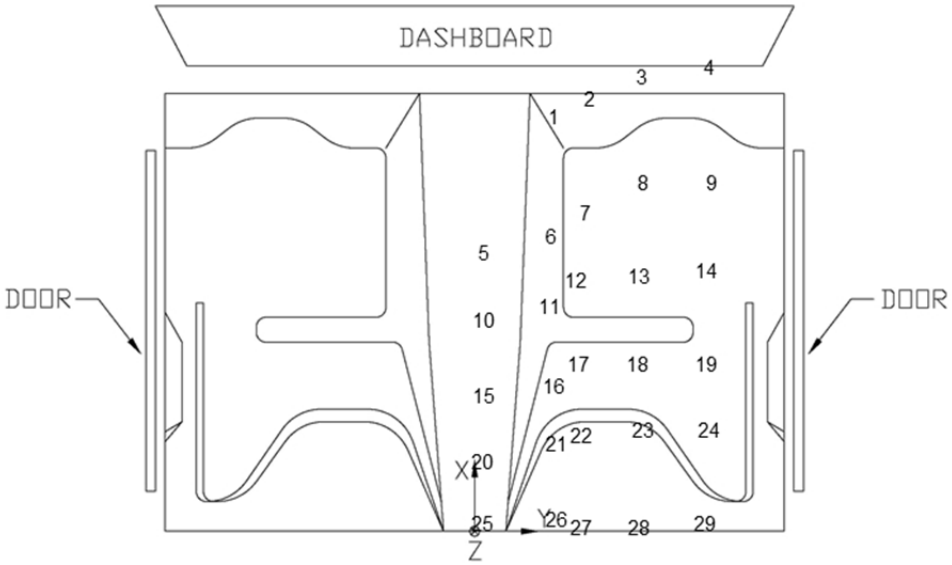

Figure D-1. Floor Pan Deformation Data – Set 1, Test No. MGSNB-1

VEHICLE PRE/POST CRUSH
FLOORPAN - SET 2

TEST: MGSNB-1
VEHICLE: 2270P/Ram 1500

Note: If impact is on driver side need to enter negative number for Y

POINT	X (in.)	Y (in.)	Z (in.)	X' (in.)	Y' (in.)	Z' (in.)	ΔX (in.)	ΔY (in.)	ΔZ (in.)
1	40	15	- 1/2	40	15	- 1/2	0	0	0
2	40 3/4	18 3/4	-2	40 1/2	18 3/4	-2	- 1/4	0	0
3	42 3/4	24 1/4	-7 1/2	42 1/2	24	-7 1/2	- 1/4	- 1/4	0
4	43	31 1/2	-7 1/2	42 1/2	31 1/4	-7 1/2	- 1/2	- 1/4	0
5	32 1/2	7 1/4	-3 1/4	32 1/2	7 1/4	-3 1/2	0	0	- 1/4
6	33 1/2	14 1/2	-3 3/4	33 1/4	14 1/4	-3 1/2	- 1/4	- 1/4	1/4
7	34 3/4	18 1/2	-6	34 1/2	18 1/4	-6	- 1/4	- 1/4	0
8	36 3/4	24 3/4	-10 1/2	36 3/4	24 1/2	-10 3/4	0	- 1/4	- 1/4
9	36 3/4	31 1/2	-10 1/2	36 1/2	31 1/2	-10 1/2	- 1/4	0	0
10	29	7	-3 1/2	28 1/2	7	-3 1/2	- 1/2	0	0
11	29 1/2	14 1/4	-4 1/2	29 1/4	14 1/4	-4 1/2	- 1/4	0	0
12	31 1/4	17 1/2	-9 3/4	31	16 3/4	-9 3/4	- 1/4	- 3/4	0
13	31 1/2	24 1/2	-10 1/2	31 1/4	23 3/4	-10 1/2	- 1/4	- 3/4	0
14	31 1/2	32 1/4	-10 3/4	31 1/2	31 1/2	-10 1/2	0	- 3/4	1/4
15	24 1/2	7	-3 3/4	24 1/2	7	-3 3/4	0	0	0
16	25	15	-4 3/4	25	14 3/4	-4 3/4	0	- 1/4	0
17	25 3/4	17 3/4	-10	25 3/4	17 1/2	-10	0	- 1/4	0
18	25 3/4	24 1/2	-10	25 3/4	24 1/4	-10 1/4	0	- 1/4	- 1/4
19	25 3/4	32 1/4	-10 1/4	25 3/4	31 3/4	-10 1/4	0	- 1/2	0
20	20 3/4	7	-3 3/4	20 3/4	7	-3 3/4	0	0	0
21	21 3/4	15	-5 1/4	21 3/4	14 1/2	-5 1/4	0	- 1/2	0
22	22 1/4	18 1/4	-9 3/4	22 1/2	18	-9 3/4	1/4	- 1/4	0
23	22 3/4	24 1/2	-10	22 3/4	24 1/4	-10	0	- 1/4	0
24	22 3/4	32 1/4	-10 1/4	22 3/4	31 3/4	-10 1/4	0	- 1/2	0
25	17 1/2	7	-3	17 1/2	7	-3	0	0	0
26	17 1/2	15 1/2	-4	17 1/2	15 1/2	-4	0	0	0
27	17 1/2	18 1/4	-5 3/4	17 1/2	18 1/4	-5 3/4	0	0	0
28	17 1/2	24 1/2	-5 3/4	17 1/2	24 1/2	-5 3/4	0	0	0
29	17 1/2	32	-6	17 1/2	32	-6	0	0	0
30							0	0	0
31							0	0	0

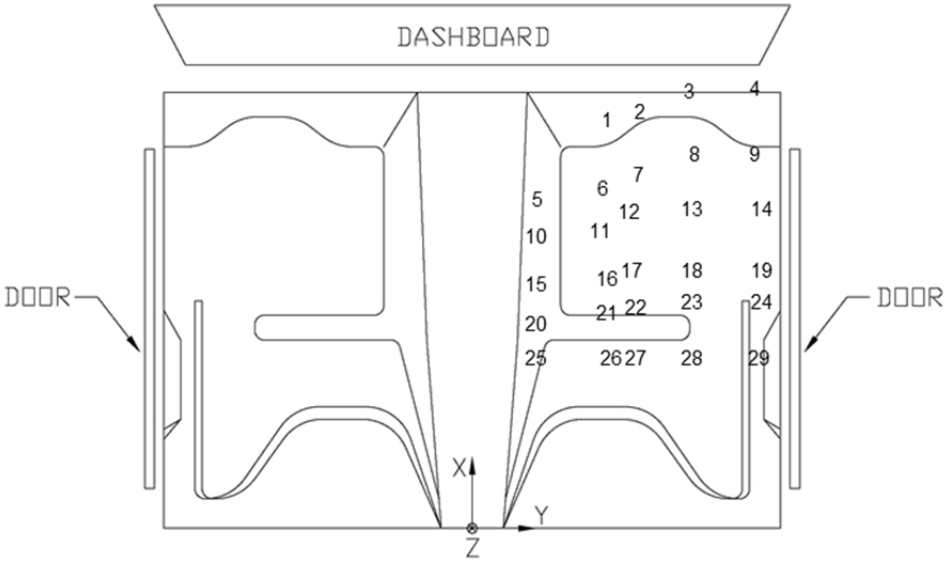

Figure D-2. Floor Pan Deformation Data – Set 2, Test No. MGSNB-1

VEHICLE PRE/POST CRUSH
INTERIOR CRUSH - SET 1

TEST: MGSNB-1
VEHICLE: 2270P/Ram 1500

Note: If impact is on driver side need to enter negative number for Y

	POINT	X (in.)	Y (in.)	Z (in.)	X' (in.)	Y' (in.)	Z' (in.)	ΔX (in.)	ΔY (in.)	ΔZ (in.)
DASH	A1	39 1/2	32 1/2	22 3/4	39 3/4	32 1/2	23	1/4	0	1/4
	A2	39 1/2	45 1/4	21 1/2	39 1/4	45 1/4	21 1/2	- 1/4	0	0
	A3	38 3/4	57	20 3/4	38 3/4	57	21	0	0	1/4
	A4	33	35 3/4	15	33	35 3/4	15 1/4	0	0	1/4
	A5	33 3/4	46 1/2	14 3/4	33 3/4	46 1/2	15	0	0	1/4
	A6	33 3/4	58	15	34	58	15 1/4	1/4	0	1/4
SIDE PANEL	B1	44 1/4	28 1/4	- 1/2	44	28	- 1/2	- 1/4	- 1/4	0
	B2	38 1/4	27 1/4	-1 1/2	38 1/4	27	-1 1/2	0	- 1/4	0
	B3	40 3/4	28	-6 3/4	40 1/2	27 1/2	-6 1/2	- 1/4	- 1/2	1/4
IMPACT SIDE DOOR	C1	29 3/4	37 3/4	12 1/4	29 1/4	38 1/4	12 1/2	- 1/2	1/2	1/4
	C2	20 1/2	38 1/4	12 1/2	20	39 1/2	12 1/2	- 1/2	1 1/4	0
	C3	2 3/4	38 1/4	13 1/2	2 1/2	39 1/2	14	- 1/4	1 1/4	1/2
	C4	28	34 1/4	0	27 1/2	34 1/2	0	- 1/2	1/4	0
	C5	19 1/4	34 1/4	0	18 1/2	35 1/4	0	- 3/4	1	0
	C6	2 3/4	34 3/4	3/4	2 1/2	35 1/4	1	- 1/4	1/2	1/4
ROOF	D1							0	0	0
	D2							0	0	0
	D3							0	0	0
	D4							0	0	0
	D5							0	0	0
	D6							0	0	0
	D7							0	0	0
	D8							0	0	0
	D9							0	0	0
	D10							0	0	0
	D11							0	0	0
	D12							0	0	0
	D13							0	0	0
	D14							0	0	0
	D15							0	0	0

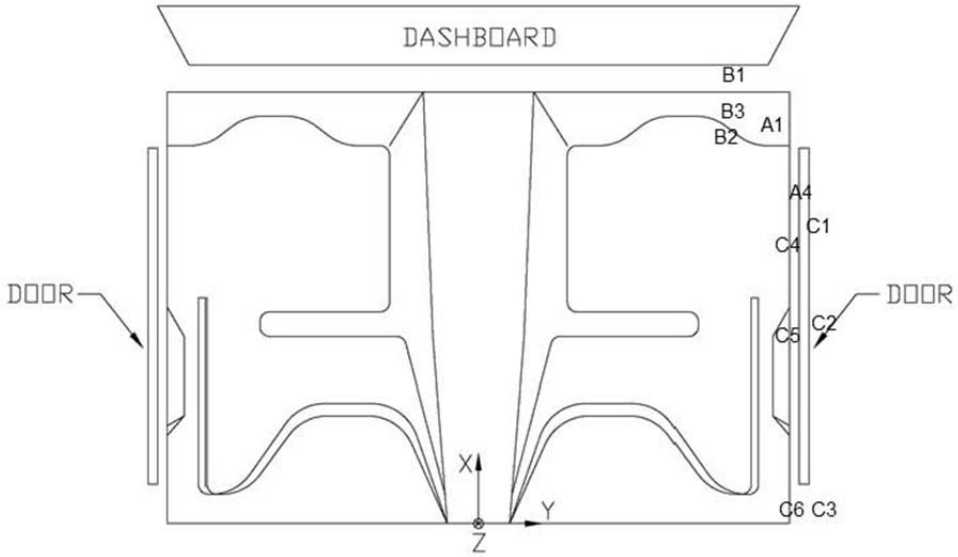

Figure D-3. Occupant Compartment Deformation Data – Set 1, Test No. MGSNB-1

VEHICLE PRE/POST CRUSH
INTERIOR CRUSH - SET 2

TEST: MGSNB-1
VEHICLE: 2270P/Ram 1500

Note: If impact is on driver side need to enter negative number for Y

	POINT	X (in.)	Y (in.)	Z (in.)	X' (in.)	Y' (in.)	Z' (in.)	ΔX (in.)	ΔY (in.)	ΔZ (in.)
DASH	A1	52	37	22 3/4	52	37	22 3/4	0	0	0
	A2	53 1/2	49 1/2	21	53 1/2	49 1/2	21 1/4	0	0	1/4
	A3	55 3/4	61 1/4	19 3/4	56	61 1/2	20	1/4	1/4	1/4
	A4	46 1/2	39 1/4	14 3/4	46 1/2	39 1/4	15	0	0	1/4
	A5	48 1/2	50 1/4	14 1/4	48 1/2	50 1/2	14 1/2	0	1/4	1/4
	A6	51 1/2	62	14 1/4	51 3/4	62 1/4	14 1/2	1/4	1/4	1/4
SIDE PANEL	B1	49 1/4	30 3/4	-1 1/4	49 1/4	30 1/2	-1 1/2	0	- 1/4	- 1/4
	B2	43 1/4	29 1/4	-2 1/2	43 1/4	29	-2 1/2	0	- 1/4	0
	B3	45 1/2	30 1/4	-7 3/4	45 1/2	30	-7 1/2	0	- 1/4	1/4
IMPACT SIDE DOOR	C1	33 1/4	42 3/4	11 1/2	32 3/4	43	11 1/2	- 1/2	1/4	0
	C2	24	43	11 1/2	23 1/2	44	11 3/4	- 1/2	1	1/4
	C3	6 1/4	43	12 1/2	6	44 1/4	12 3/4	- 1/4	1 1/4	1/4
	C4	33	40 1/4	-1	32 1/2	40 1/2	-1	- 1/2	1/4	0
	C5	23 3/4	40 1/4	-1	23 1/2	41 1/4	-1	- 1/4	1	0
	C6	7 1/2	40 3/4	0	7 1/2	41 1/2	0	0	3/4	0
ROOF	D1							0	0	0
	D2							0	0	0
	D3							0	0	0
	D4							0	0	0
	D5							0	0	0
	D6							0	0	0
	D7							0	0	0
	D8							0	0	0
	D9							0	0	0
	D10							0	0	0
	D11							0	0	0
	D12							0	0	0
	D13							0	0	0
	D14							0	0	0
	D15							0	0	0

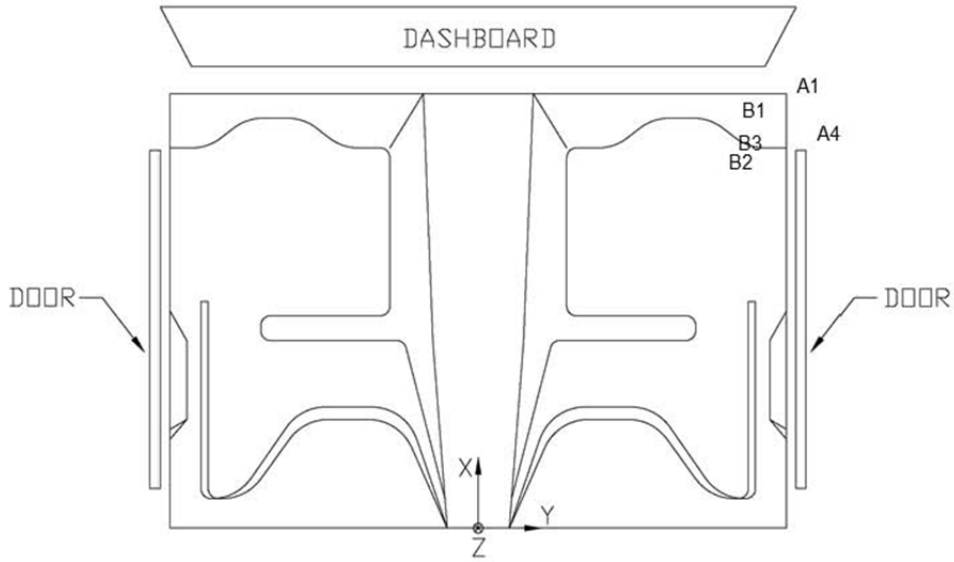

Figure D-4. Occupant Compartment Deformation Data – Set 2, Test No. MGSNB-1

Date: 6/1/2011 **Test Number:** MGSNB-1

Make: Dodge **Model:** 2270P/Ram 1500 **Year:** 2004

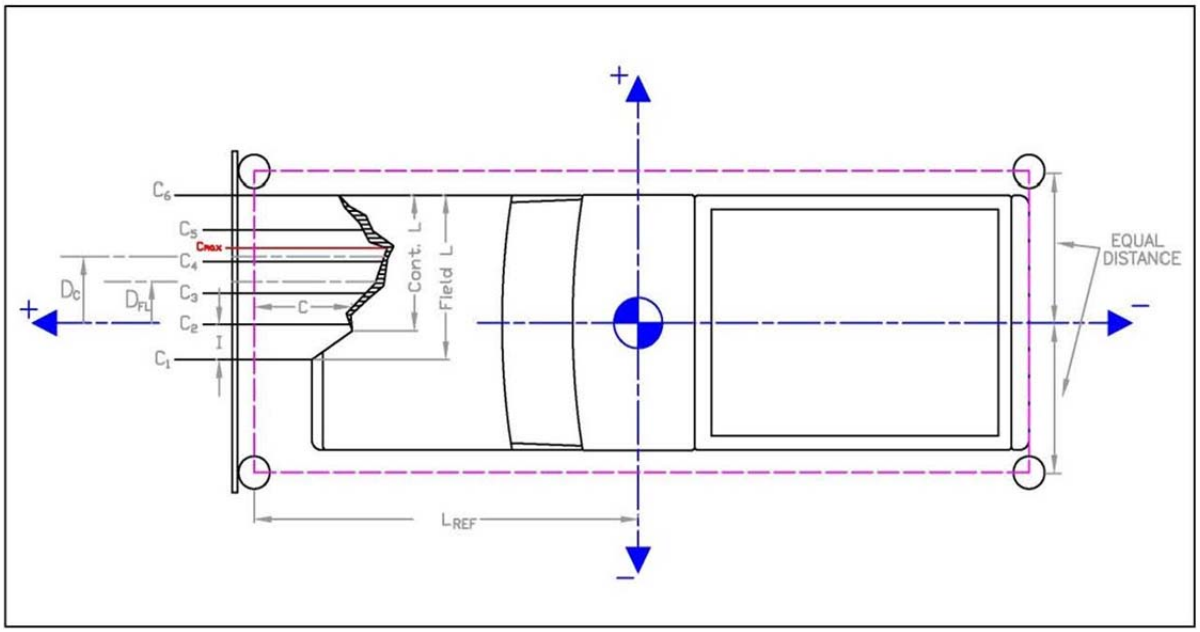

	in.	(mm)
Distance from C.G. to reference line - L_{REF}:	104.75	(2661)
Width of contact and induced crush - Field L:	38.875	(987)
Crush measurement spacing interval (L/5) - I:	7.775	(197)
Distance from center of vehicle to center of Field L - D_{FL}:	19.4375	(494)
Width of Contact Damage:	38.875	(987)
Distance from center of vehicle to center of contect damage - D_C:	19.4375	(494)

NOTE: Enter "NA" for crush measurement if distance can not be measured (i.e., side of vehicle has been pushed inward)

	Crush Measurement		Lateral Location		Original Profile Measurement		Dist. Between Ref. Lines		Actual Crush	
	in.	(mm)	in.	(mm)	in.	(mm)	in.	(mm)	in.	(mm)
C_1	2.75	(70)	0	()	10.25	(260)	-7.99	-(203)	0.5	(12)
C_2	3	(76)	7.775	(197)	10.48	(266)			0.5	(13)
C_3	3.5	(89)	15.55	(395)	11.66	(296)			-0.2	-(4)
C_4	6.5	(165)	23.325	(592)	13.39	(340)			1.1	(28)
C_5	NA	NA	31.1	(790)	16.81	(427)			NA	NA
C_6	NA	NA	38.875	(987)	29.00	(737)			NA	NA
C_{MAX}	7	(178)	22	(559)	13.00	(330)			2.0	(51)

Figure D-5. Exterior Vehicle Crush (NASS) - Front, Test No. MGSNB-1

Date: 6/1/2011 **Test Number:** MGSNB-1

Make: Dodge **Model:** 2270P/Ram 1500 **Year:** 2004

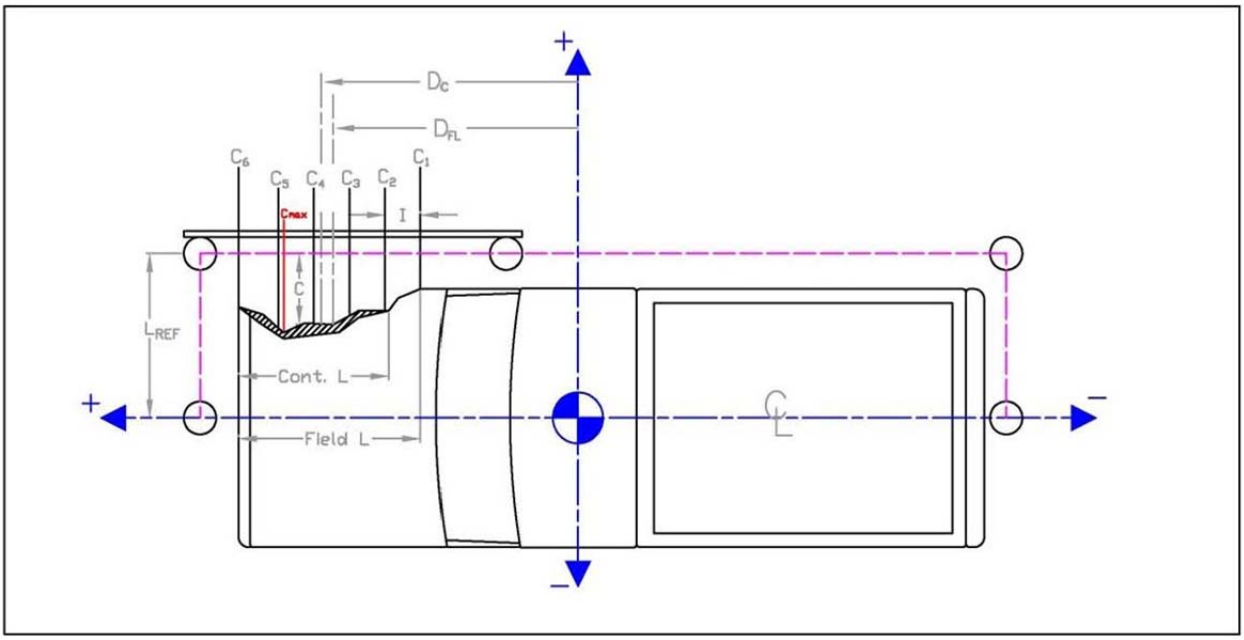

	in.	(mm)
Distance from centerline to reference line - L_{REF}:	55.5	(1410)
Width of contact and induced crush - Field L:	227	(5766)
Crush measurement spacing interval (L/5) - I:	45.4	(1153)
Distance from vehicle c.g. to center of Field L - D_{FL}:	-11.5	-(292)
Width of Contact Damage:	227	(5766)
Distance from vehicle c.g. to center of contect damage - D_C:	11.75	(298)

NOTE: Enter "NA" for crush measurement if distance can not be measured (i.e., front of vehicle has been pushed inward or tire has been remeoved)

	Crush Measurement		Longitudinal Location		Original Profile Measurement		Dist. Between Ref. Lines		Actual Crush	
	in.	(mm)	in.	(mm)	in.	(mm)	in.	(mm)	in.	(mm)
C_1	NA	NA	-125	-(3175)	15.38	(391)	5.5	(140)	NA	NA
C_2	16.5	(419)	-79.6	-(2022)	10.50	(267)			0.5	(13)
C_3	15.5	(394)	-34.2	-(869)	11.56	(294)			-1.6	-(40)
C_4	19	(483)	11.2	(284)	11.25	(286)			2.3	(57)
C_5	NA	NA	56.6	(1438)	10.50	(267)			NA	NA
C_6	39	(991)	102	(2591)	35.25	(895)			-1.8	-(44)
C_{MAX}	26	(660)	77	(1956)	10.69	(271)			9.8	(249)

Figure D-6. Exterior Vehicle Crush (NASS) - Side, Test No. MGSNB-1

VEHICLE PRE/POST CRUSH
FLOORPAN - SET 1

TEST: MGSNB-2
VEHICLE: Rio

Note: If impact is on driver side need to enter negative number for Y

POINT	X (in.)	Y (in.)	Z (in.)	X' (in.)	Y' (in.)	Z' (in.)	ΔX (in.)	ΔY (in.)	ΔZ (in.)
1	28 3/4	4 1/4	-2	28 1/2	4 1/2	-2	- 1/4	1/4	0
2	30	8 3/4	-2 1/4	29 3/4	8 3/4	-2	- 1/4	0	1/4
3	30	14 1/2	-1 3/4	29 1/2	14	-1 3/4	- 1/2	- 1/2	0
4	26	20 1/2	0	26 3/4	19 3/4	0	3/4	- 3/4	0
5	27	4 1/2	-4 1/4	26 3/4	4 1/4	-4 1/4	- 1/4	- 1/4	0
6	27 3/4	8 3/4	-4 1/4	27 1/2	8 3/4	-4 1/4	- 1/4	0	0
7	27 3/4	14 1/4	-4	27 1/4	14 1/4	-3 3/4	- 1/2	0	1/4
8	25 1/4	20 3/4	-2	24 1/2	20 1/4	-2	- 3/4	- 1/2	0
9	24	4	-5 1/2	24	4	-5 1/2	0	0	0
10	25 1/4	9	-7	25 1/4	8 3/4	-7	0	- 1/4	0
11	25	14 3/4	-6 1/4	25	14 1/2	-6 1/4	0	- 1/4	0
12	23 1/2	20 1/4	-5	23 3/4	19 1/2	-5 1/4	1/4	- 3/4	- 1/4
13	17 3/4	3 3/4	-8	17 3/4	3 3/4	-8	0	0	0
14	18	9 1/2	-7 3/4	18	9 1/2	-8	0	0	- 1/4
15	18	14 1/2	-7	18	14 1/2	-7 1/2	0	0	- 1/2
16	18 1/2	20 1/2	-6 3/4	18 1/4	20 1/4	-7	- 1/4	- 1/4	- 1/4
17	13 1/4	3 1/2	-8	13 1/4	3 1/2	-8	0	0	0
18	15	10	-7 3/4	15	9 3/4	-8	0	- 1/4	- 1/4
19	15 1/4	14 1/2	-7 1/4	15 1/4	14 1/2	-7 1/2	0	0	- 1/4
20	14 3/4	20 1/2	-6 3/4	14 1/2	20 1/4	-6 3/4	- 1/4	- 1/4	0
21	10	3 1/2	-8	10	3 1/2	-8	0	0	0
22	8 1/2	11 1/4	-7 1/4	8 1/2	11 1/2	-7 1/2	0	1/4	- 1/4
23	7 3/4	16 1/4	-7 1/4	8	16 1/2	-7 1/4	1/4	1/4	0
24	8	20 3/4	-7	8	21	-7	0	1/4	0
25	1 1/4	4	-4 3/4	1 1/4	3 3/4	-4 1/2	0	- 1/4	1/4
26	1 1/4	7 1/2	-5 1/4	1 1/4	7 1/4	-5	0	- 1/4	1/4
27	1	13 1/4	-5	1	13	-5	0	- 1/4	0
28	1	19 1/2	-4	1	19 1/2	-4 1/4	0	0	- 1/4
29							0	0	0
30							0	0	0
31							0	0	0

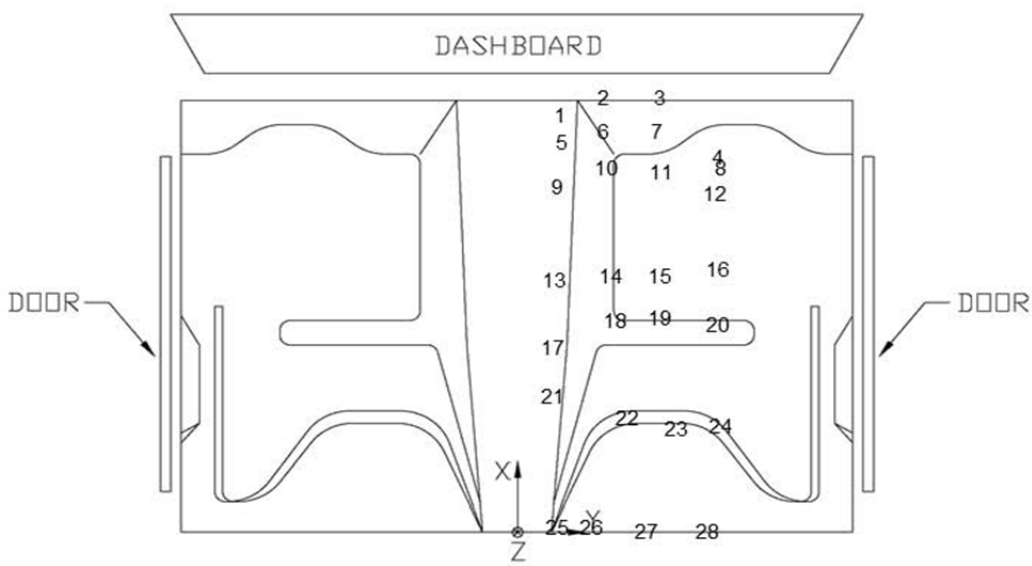

Figure D-7. Floor Pan Deformation Data – Set 1, Test No. MGSNB-2

VEHICLE PRE/POST CRUSH
FLOORPAN - SET 2

TEST: MGSNB-2
VEHICLE: Rio

Note: If impact is on driver side need to enter negative number for Y

POINT	X (in.)	Y (in.)	Z (in.)	X' (in.)	Y' (in.)	Z' (in.)	ΔX (in.)	ΔY (in.)	ΔZ (in.)
1	34 1/4	9 1/2	-2	34	9 1/2	-2	- 1/4	0	0
2	35 3/4	14	-2 1/4	35 1/4	13 3/4	-2 1/4	- 1/2	- 1/4	0
3	35 3/4	19 3/4	-2	34 3/4	19 1/4	-2	-1	- 1/2	0
4	31 1/2	26	- 3/4	30 1/2	25	- 1/2	-1	-1	1/4
5	32 1/2	9 3/4	-4 1/4	32 1/2	9 1/4	-4 1/4	0	- 1/2	0
6	33 1/2	14	-4 1/2	33	13 1/2	-4 1/2	- 1/2	- 1/2	0
7	33 1/2	19 3/4	-4 1/4	32 3/4	19	-4 1/4	- 3/4	- 3/4	0
8	31	26	-2 1/2	30	25 1/2	-2 1/2	-1	- 1/2	0
9	29 3/4	9 1/4	-5 1/4	29 1/2	9	-5 1/2	- 1/4	- 1/4	- 1/4
10	31	14 1/4	-7	30 3/4	13 3/4	-7 1/4	- 1/4	- 1/2	- 1/4
11	30 3/4	20	-6 1/2	30 3/4	20	-6 1/2	0	0	0
12	29 1/4	25 1/4	-5 1/2	29 1/2	25 1/4	-6	1/4	-0	- 1/2
13	23 1/2	9	-8	23 1/2	8 1/2	-8	0	- 1/2	0
14	24	14 3/4	-8	24	15	-8	0	1/4	0
15	23 3/4	19 3/4	-7 1/2	23 3/4	19 1/2	-7 3/4	0	- 1/4	- 1/4
16	24	26	-7 1/4	24	25 1/2	-7 1/4	0	- 1/2	0
17	19	8 3/4	-7 3/4	19	9	-8	0	1/4	- 1/4
18	21	15 1/2	-8	21	15	-8	0	- 1/2	0
19	21	19 3/4	-7 1/2	21	19 1/2	-7 3/4	0	- 1/4	- 1/4
20	20 1/4	25 3/4	-7 1/4	20 1/4	25 1/2	-7 1/4	0	- 1/4	0
21	15 3/4	8 3/4	-8	15 1/2	8 3/4	-8	- 1/4	0	0
22	14 1/2	16 3/4	-7 1/2	14 1/4	16 1/2	-7 3/4	- 1/4	- 1/4	- 1/4
23	13 3/4	21 1/2	-7 1/2	13 3/4	21 1/2	-7 1/2	0	0	0
24	13 3/4	26	-7 1/4	13 1/2	26 1/4	-7 1/2	- 1/4	1/4	- 1/4
25	7	9 1/4	-4 1/2	7	9 1/4	-4 1/2	0	0	0
26	7	12 1/2	-5	7	12 3/4	-5 1/4	0	1/4	- 1/4
27	6 3/4	18 1/2	-5	6 3/4	18 1/2	-5 1/4	0	0	- 1/4
28	7	24 3/4	-4 1/4	6 3/4	24 3/4	-4 1/2	- 1/4	0	- 1/4
29							0	0	0
30							0	0	0
31							0	0	0

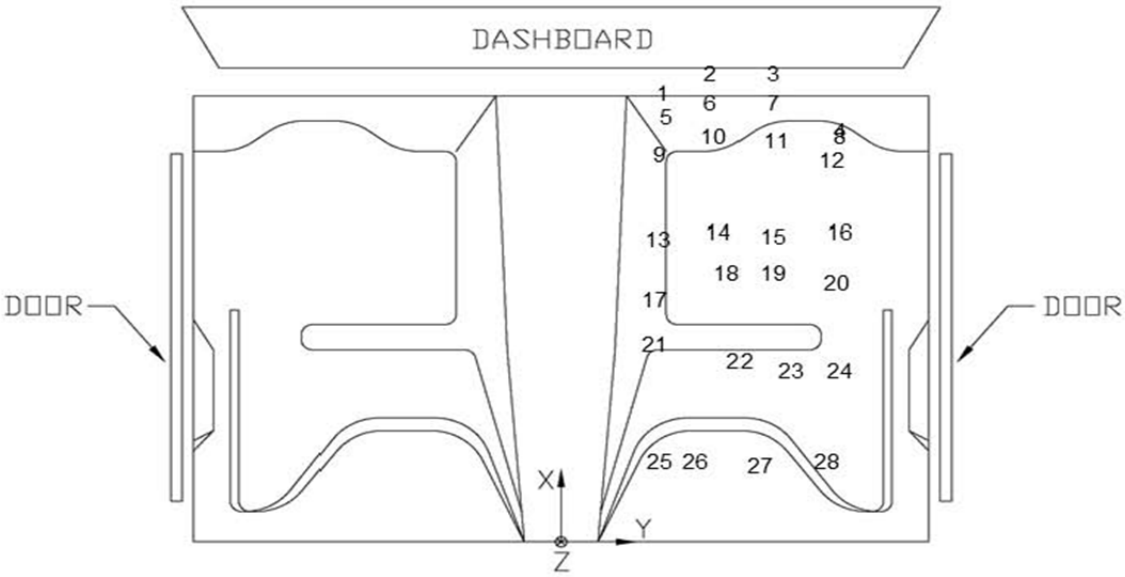

Figure D-8. Floor Pan Deformation Data – Set 2, Test No. MGSNB-2

VEHICLE PRE/POST CRUSH
INTERIOR CRUSH - SET 1

TEST: MGSNB-2
VEHICLE: Rio

Note: If impact is on driver side need to enter negative number for Y

	POINT	X (in.)	Y (in.)	Z (in.)	X' (in.)	Y' (in.)	Z' (in.)	ΔX (in.)	ΔY (in.)	ΔZ (in.)
DASH	A1	33	32 1/2	20 1/2	33	32 1/2	21	0	0	1/2
	A2	33	40	20 3/4	33	40	21 1/4	0	0	1/2
	A3	33	45 3/4	21	33	45 1/2	21 1/4	0	- 1/4	1/4
	A4	26	33 1/2	15	26	33 1/2	15 1/4	0	0	1/4
	A5	26	39	15 1/4	26	39	15 1/2	0	0	1/4
	A6	26 1/4	45 3/4	15 1/2	26	45 1/4	15 3/4	- 1/4	- 1/2	1/4
SIDE PANEL	B1	20 3/4	25 1/4	1 3/4	20 1/2	25	2	- 1/4	- 1/4	1/4
	B2	19 3/4	24 3/4	- 3/4	19 1/2	24 1/4	- 1/4	- 1/4	- 1/2	1/2
	B3	22 3/4	25 3/4	- 3/4	22 1/4	24 1/2	- 1/2	- 1/2	-1 1/4	1/4
IMPACT SIDE DOOR	C1	27 3/4	33	17 3/4	27 1/2	33 1/4	18	- 1/4	1/4	1/4
	C2	18 3/4	33	18 1/4	18 1/2	33 1/4	18 1/4	- 1/4	1/4	0
	C3	7 3/4	34	18 3/4	7 1/2	34 1/4	18 3/4	- 1/4	1/4	0
	C4	20	26	- 3/4	19 3/4	25 3/4	- 3/4	- 1/4	- 1/4	0
	C5	13	26	- 3/4	13	25 1/2	- 1/2	0	- 1/2	1/4
	C6	6 1/4	26	0	6	25 3/4	1/4	- 1/4	- 1/4	1/4
ROOF	D1							0	0	0
	D2							0	0	0
	D3							0	0	0
	D4							0	0	0
	D5							0	0	0
	D6							0	0	0
	D7							0	0	0
	D8							0	0	0
	D9							0	0	0
	D10							0	0	0
	D11							0	0	0
	D12							0	0	0
	D13							0	0	0
	D14							0	0	0
	D15							0	0	0

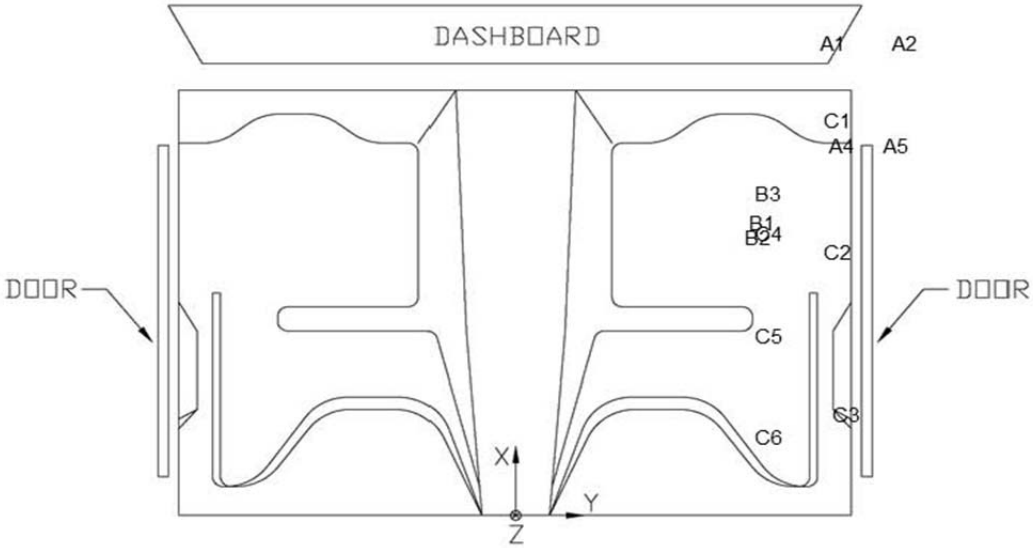

Figure D-9. Occupant Compartment Deformation Data – Set 1, Test No. MGSNB-2

VEHICLE PRE/POST CRUSH
INTERIOR CRUSH - SET 2

TEST: MGSNB-2
VEHICLE: Rio

Note: If impact is on driver side need to enter negative number for Y

	POINT	X (in.)	Y (in.)	Z (in.)	X' (in.)	Y' (in.)	Z' (in.)	ΔX (in.)	ΔY (in.)	ΔZ (in.)
DASH	A1	52	34	20 1/2	51 1/2	34	21 1/4	- 1/2	0	3/4
	A2	52	40 3/4	20 1/2	51 3/4	40 3/4	21	- 1/4	0	1/2
	A3	51 3/4	46 1/4	20 1/2	51 1/4	46 1/4	21	- 1/2	0	1/2
	A4	45 1/2	34 3/4	15	45 1/4	34 1/2	15 1/4	- 1/4	- 1/4	1/4
	A5	46	39 3/4	15 1/4	45 3/4	39 1/2	15 1/4	- 1/4	- 1/4	0
	A6	45 3/4	45 3/4	15 1/4	45 1/2	46	15 1/2	- 1/4	1/4	1/4
SIDE PANEL	B1	26	24 1/2	1	25 1/2	24 1/2	1 1/4	- 1/2	0	1/4
	B2	25	24	-1 1/4	24 3/4	23 3/4	-1	- 1/4	- 1/4	1/4
	B3	28 1/4	24 1/2	-1 1/2	27 3/4	23 1/2	-1 1/4	- 1/2	-1	1/4
IMPACT SIDE DOOR	C1	31	36 1/2	17 1/4	31	36 3/4	17 1/4	0	1/4	0
	C2	22 1/4	37	18	22	37 1/4	17 3/4	- 1/4	1/4	- 1/4
	C3	11 1/2	37 1/2	18 1/4	11 1/4	38	18 1/2	- 1/4	1/2	1/4
	C4	27 1/4	31	-1 1/4	27	30 3/4	-1 1/4	- 1/4	- 1/4	0
	C5	20 1/2	31	-1 1/4	20 1/4	30 3/4	-1 1/4	- 1/4	- 1/4	0
	C6	13 3/4	31	- 1/4	13 1/2	31	- 1/4	- 1/4	0	0
ROOF	D1							0	0	0
	D2							0	0	0
	D3							0	0	0
	D4							0	0	0
	D5							0	0	0
	D6							0	0	0
	D7							0	0	0
	D8							0	0	0
	D9							0	0	0
	D10							0	0	0
	D11							0	0	0
	D12							0	0	0
	D13							0	0	0
	D14							0	0	0
	D15							0	0	0

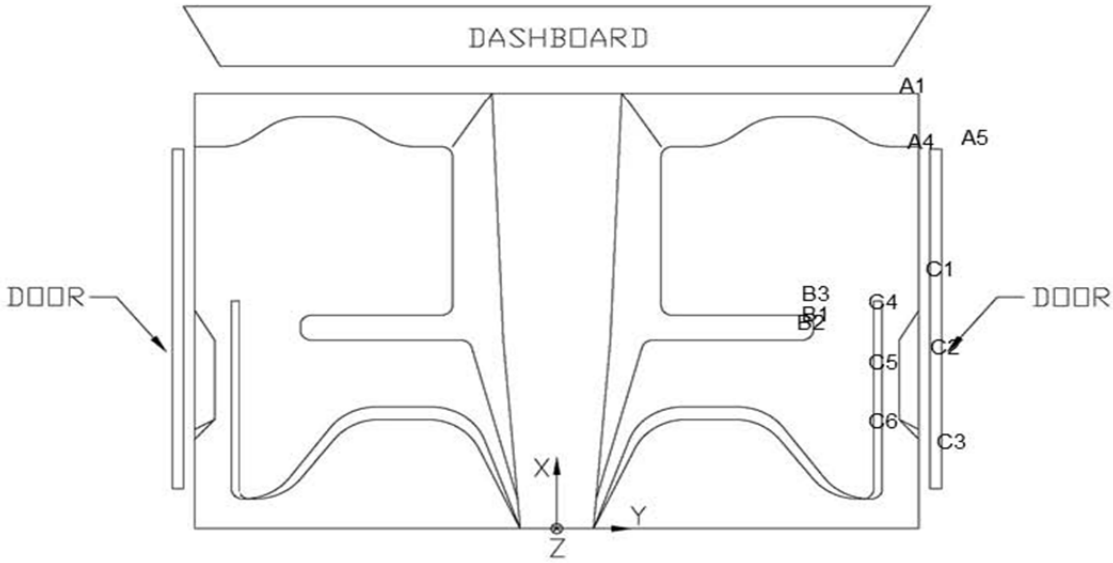

Figure D-10. Occupant Compartment Deformation Data – Set 2, Test No. MGSNB-2

Date: 7/26/2011 **Test Number:** MGSNB-2

Make: Kia **Model:** Rio **Year:** 2005

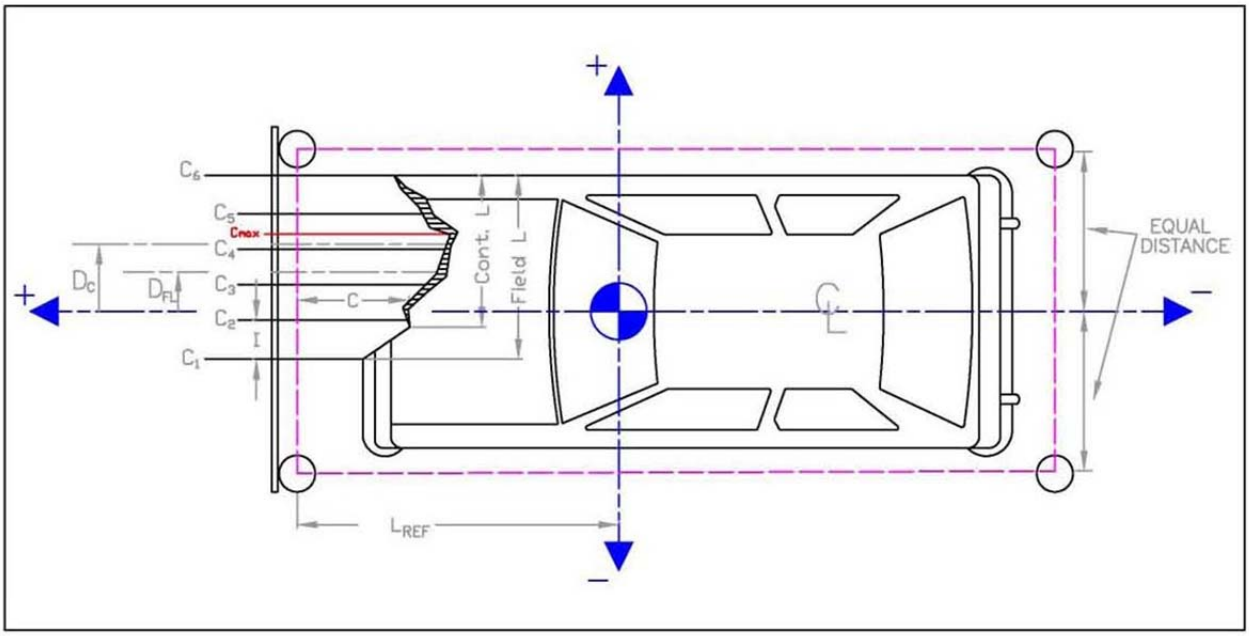

	in.	(mm)
Distance from C.G. to reference line - L_{REF}:	69	(1753)
Width of contact and induced crush - Field L:	65.5	(1664)
Crush measurement spacing interval (L/5) - I:	13.1	(333)
Distance from center of vehicle to center of Field L - D_{FL}:	0	0
Width of Contact Damage:	65.5	(1664)
Distance from center of vehicle to center of contact damage - D_C:	0	0

NOTE: Enter "NA" for crush measurement if distance can not be measured (i.e., side of vehicle has been pushed inward)

	Crush Measurement		Lateral Location		Original Profile Measurement		Dist. Between Ref. Lines		Actual Crush	
	in.	(mm)	in.	(mm)	in.	(mm)	in.	(mm)	in.	(mm)
C_1	22.5	(572)	-32.75	-(832)	29.50	(749)	-8.81	-(224)	1.8	(46)
C_2	6.75	(171)	-19.65	-(499)	11.67	(296)			3.9	(99)
C_3	11.75	(298)	-6.55	-(166)	9.42	(239)			11.1	(283)
C_4	17	(432)	6.55	(166)	9.41	(239)			16.4	(417)
C_5	18.25	(464)	19.65	(499)	11.59	(294)			15.5	(393)
C_6	NA	NA	32.75	(832)	29.50	(749)			NA	NA
C_{MAX}	17	(432)	6.55	(166)	9.41	(239)			16.4	(417)

Figure D-11. Exterior Vehicle Crush (NASS) - Front, Test No. MGSNB-2

Date: 7/26/2011 **Test Number:** MGSNB-2

Make: Kia **Model:** Rio **Year:** 2005

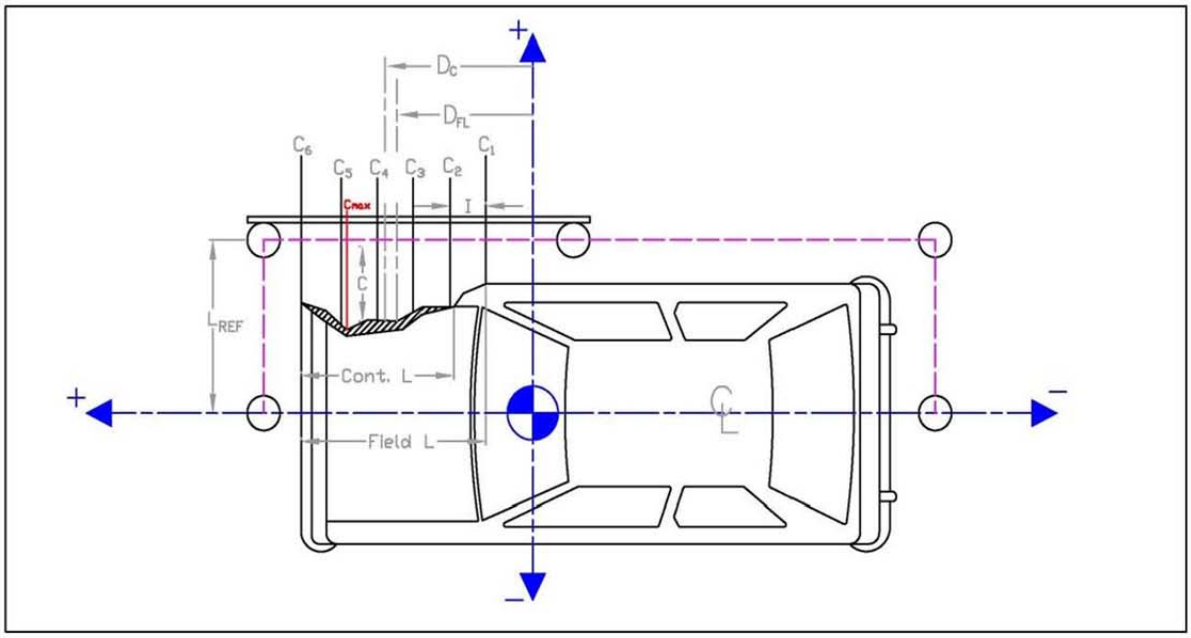

	in.	(mm)
Distance from centerline to reference line - L_{REF}:	33	(838)
Width of contact and induced crush - Field L:	69.75	(1772)
Crush measurement spacing interval (L/5) - I:	13.95	(354)
Distance from vehicle c.g. to center of Field L - D_{FL}:	34.875	(886)
Width of Contact Damage:	53.75	(1365)
Distance from vehicle c.g. to center of contect damage - D_C:	43.875	(1114)

NOTE: Enter "NA" for crush measurement if distance can not be measured (i.e., front of vehicle has been pushed inward or tire has been remeoved)

	Crush Measurement		Longitudinal Location		Original Profile Measurement		Dist. Between Ref. Lines		Actual Crush	
	in.	(mm)	in.	(mm)	in.	(mm)	in.	(mm)	in.	(mm)
C_1	1	(25)	0	()	3.13	(79)	-3	-(76)	0.9	(22)
C_2	1.25	(32)	13.95	(354)	3.13	(79)			1.1	(29)
C_3	NA	NA	27.9	(709)	4.50	(114)			NA	NA
C_4	13	(330)	41.85	(1063)	4.00	(102)			12.0	(305)
C_5	NA	NA	55.8	(1417)	4.69	(119)			NA	NA
C_6	Na	NA	69.75	(1772)	23.50	(597)			NA	NA
C_{MAX}	13	(330)	41.85	(1063)	4.00	(102)			12.0	(305)

Figure D-12. Exterior Vehicle Crush (NASS) - Side, Test No. MGSNB-2

MGSNB-2 Comparative Roof Crush Measurement

Reference vehicle is a 2004 Kia Rio with no damage
Note that the model year is one year different between the
two vehicles but the body style is identical.

MGSNB-2 roof damage was located at one point on the right front quarter of the roof panel.

	Pre-crush	Post Crush	Total Crush
Max Crush Point	6.25	7.5	1.25

Figure D-13. Roof Crush Measurement, Test No. MGSNB-2

Appendix E. Accelerometer and Rate Transducer Data Plots, Test No. MGSNB-1

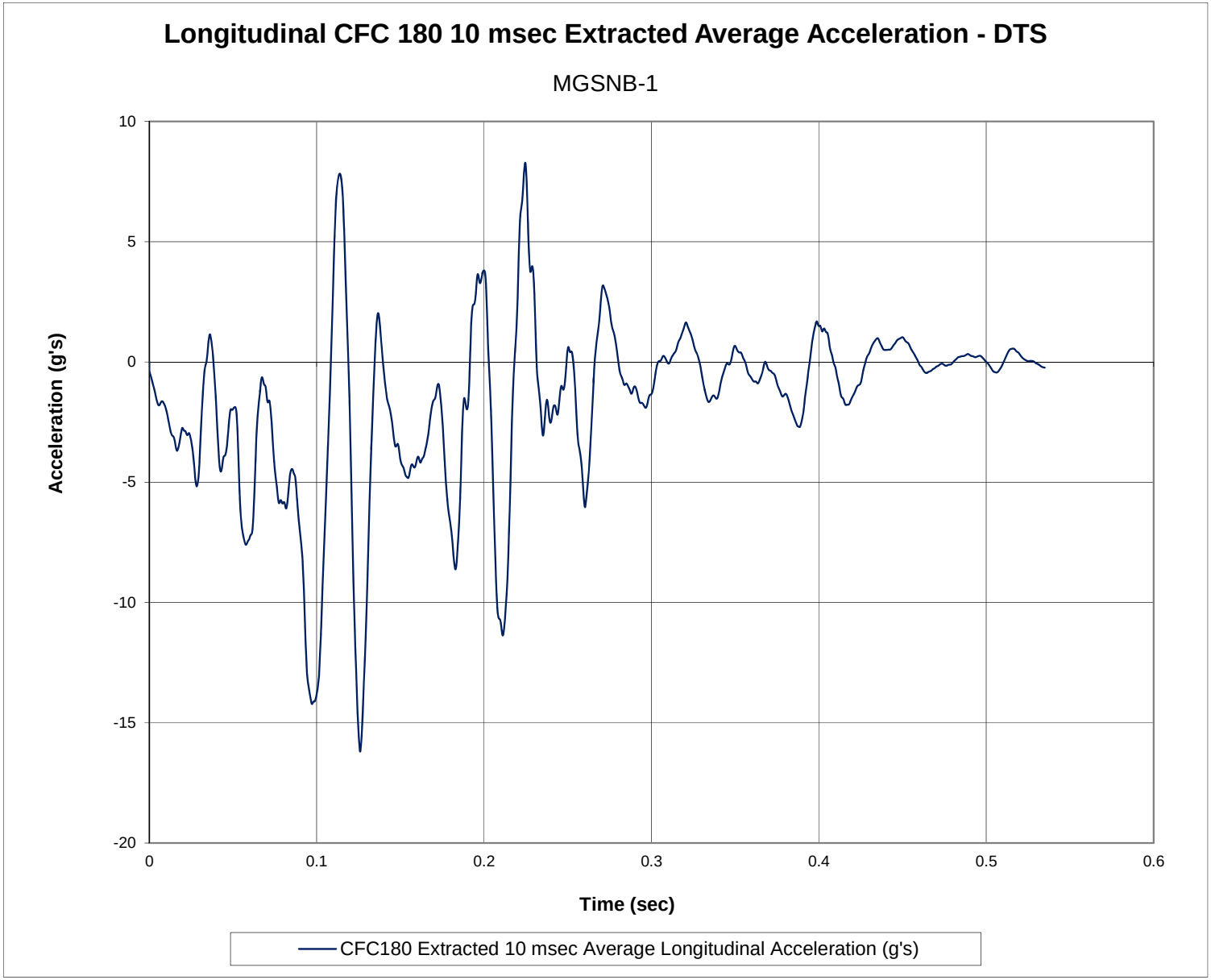

Figure E-1. 10-ms Average Longitudinal Deceleration (DTS), Test No. MGSNB-1

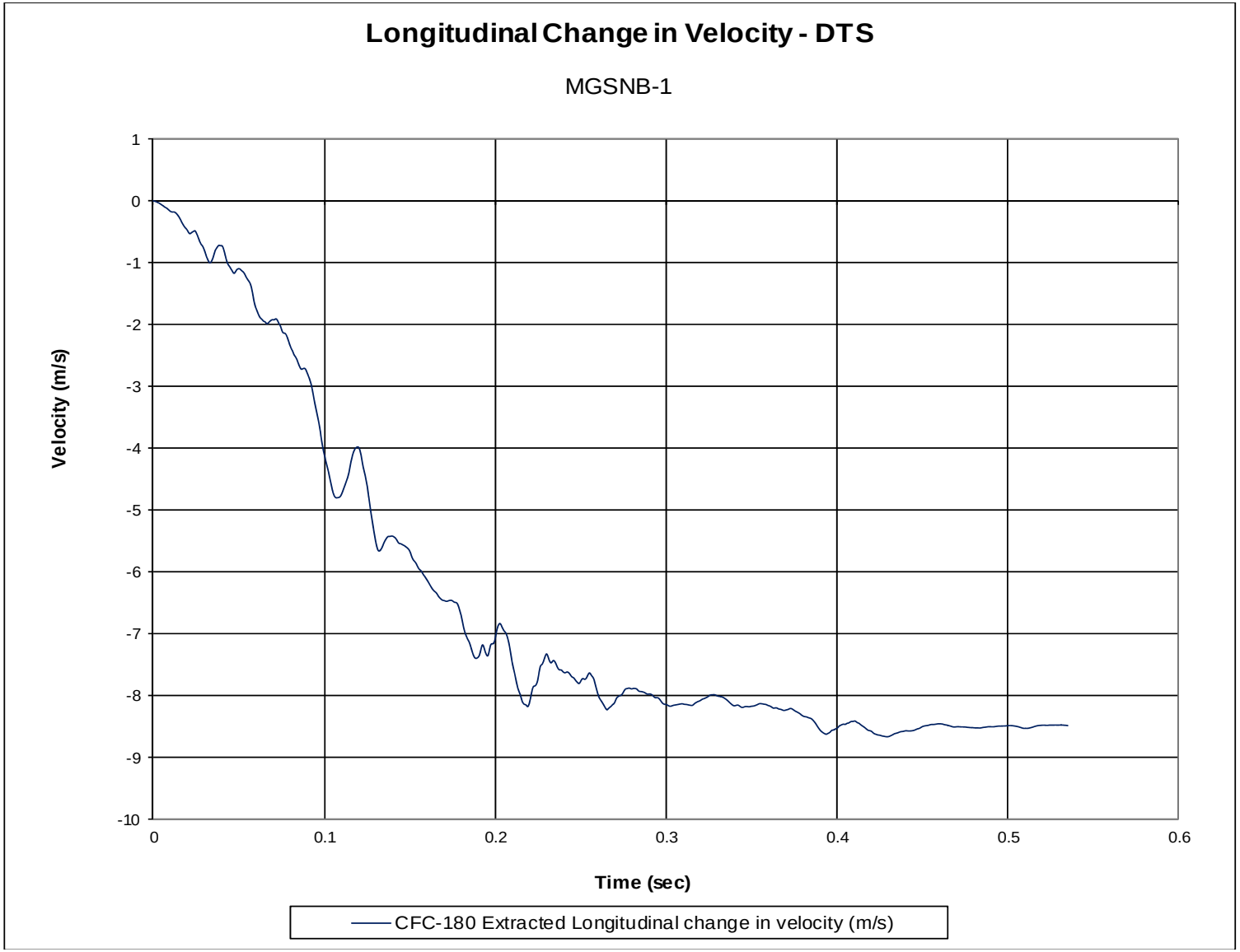

Figure E-2. Longitudinal Occupant Impact Velocity (DTS), Test No. MGSNB-1

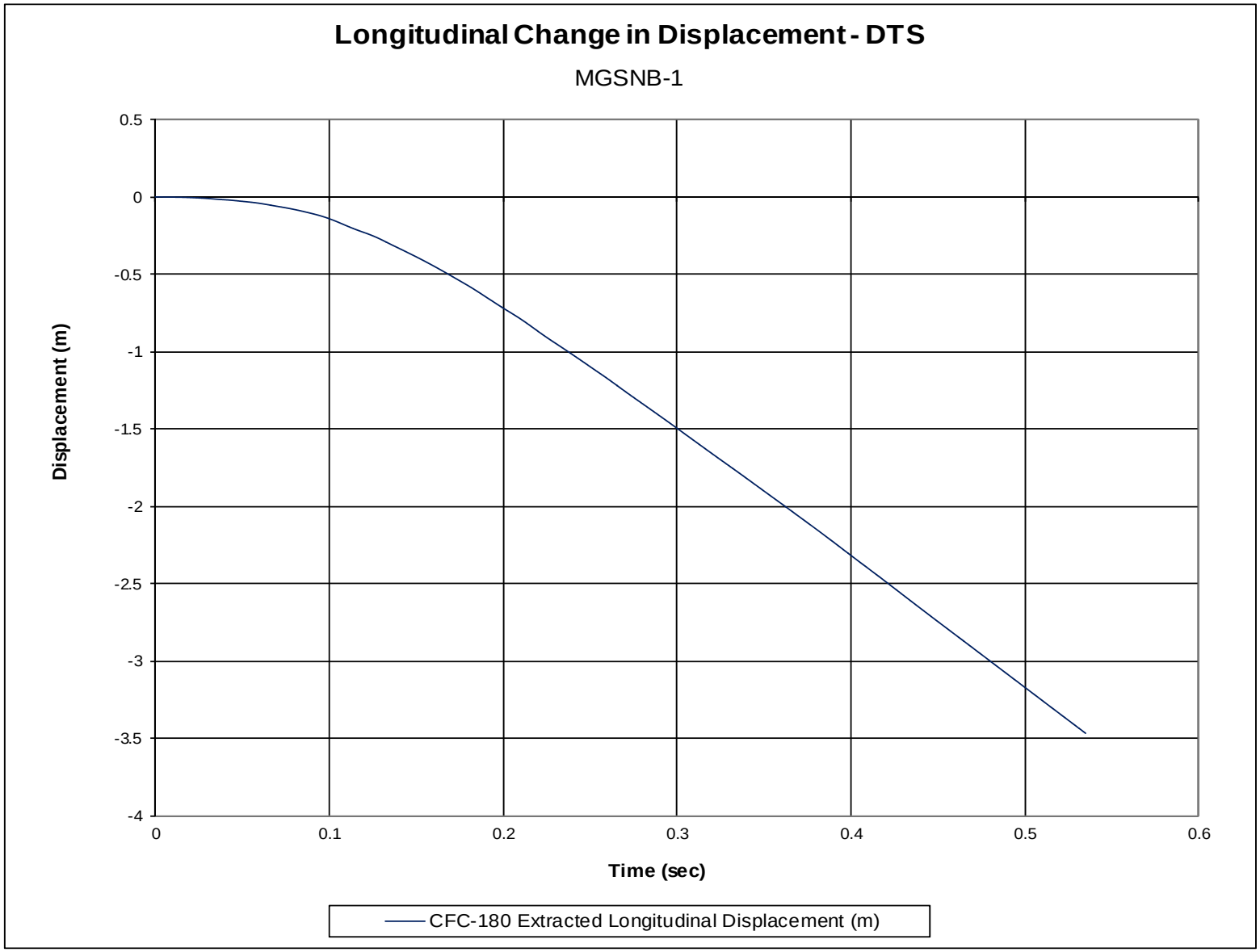

Figure E-3. Longitudinal Occupant Displacement (DTS), Test No. MGSNB-1

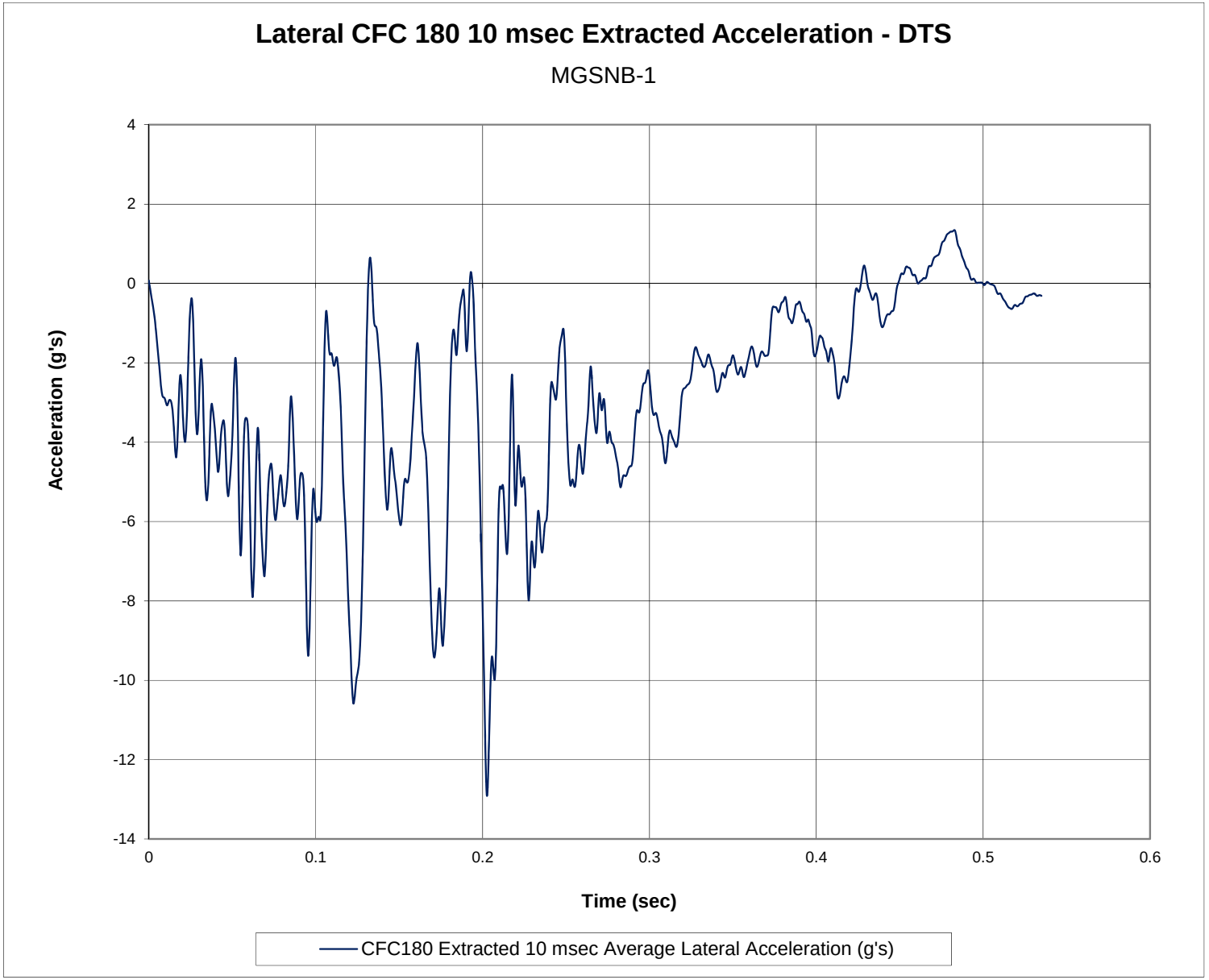

Figure E-4. 10-ms Average Lateral Deceleration (DTS), Test No. MGSNB-1

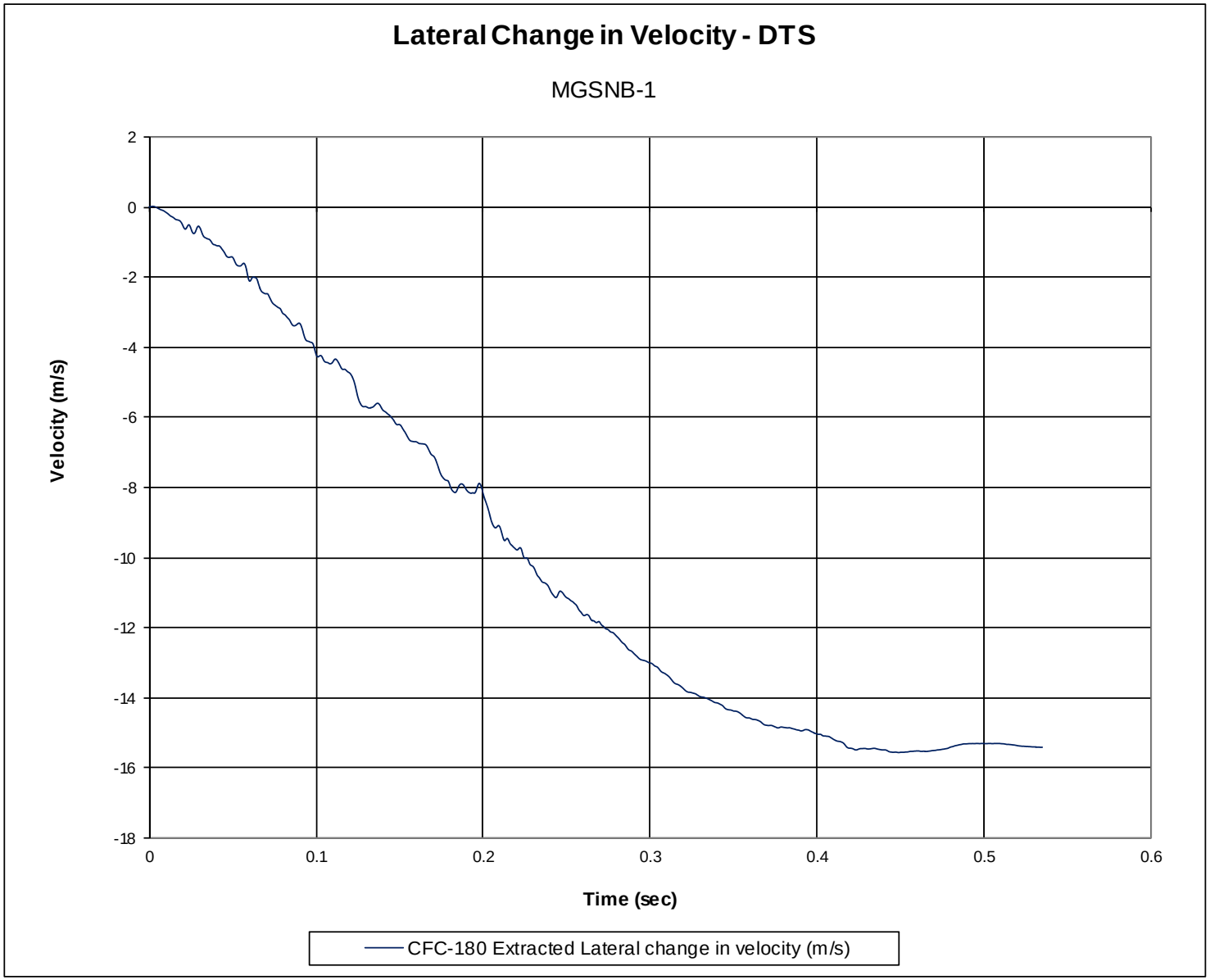

Figure E-5. Lateral Occupant Impact Velocity (DTS), Test No. MGSNB-1

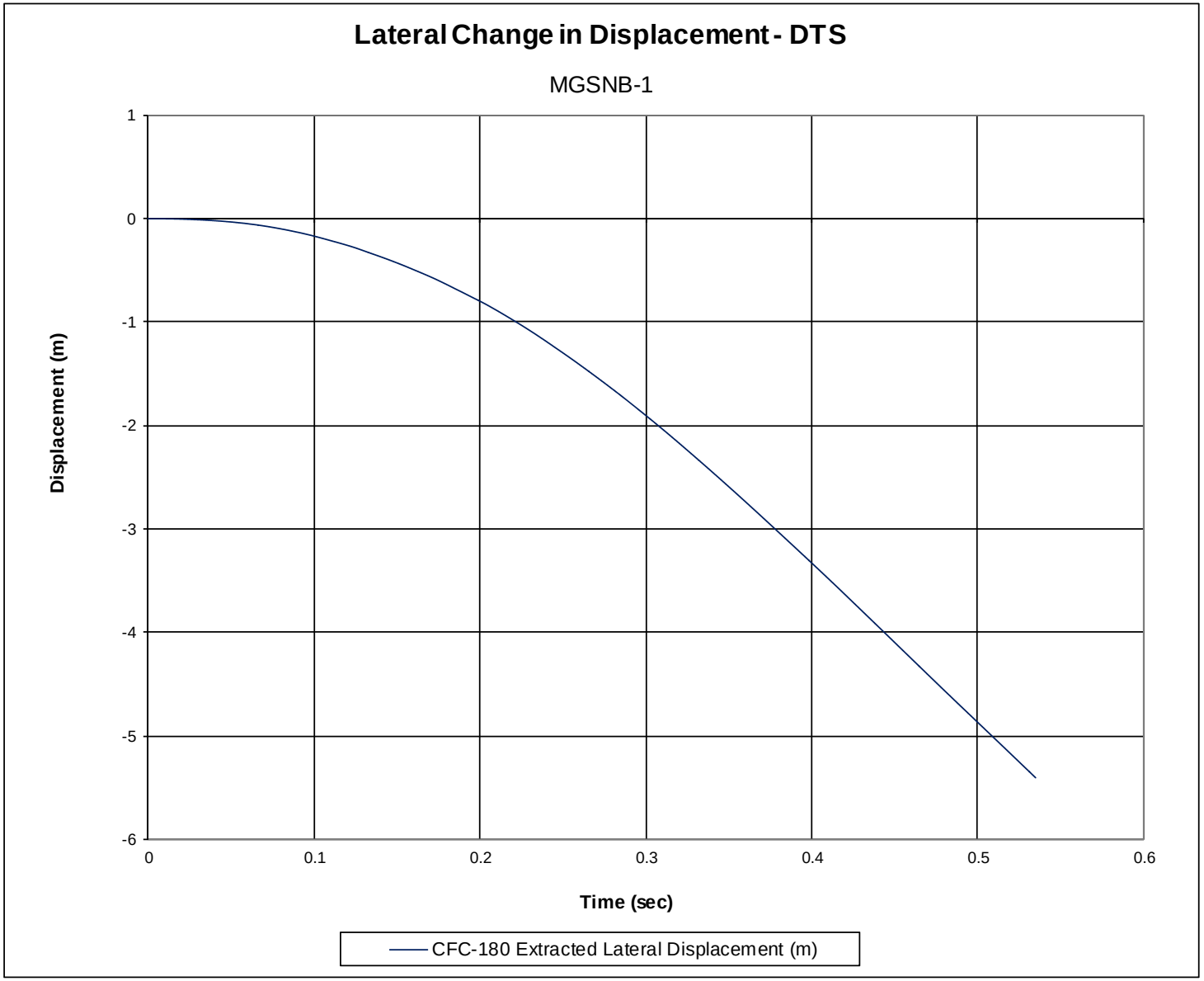

Figure E-6. Lateral Occupant Displacement (DTS), Test No. MGSNB-1

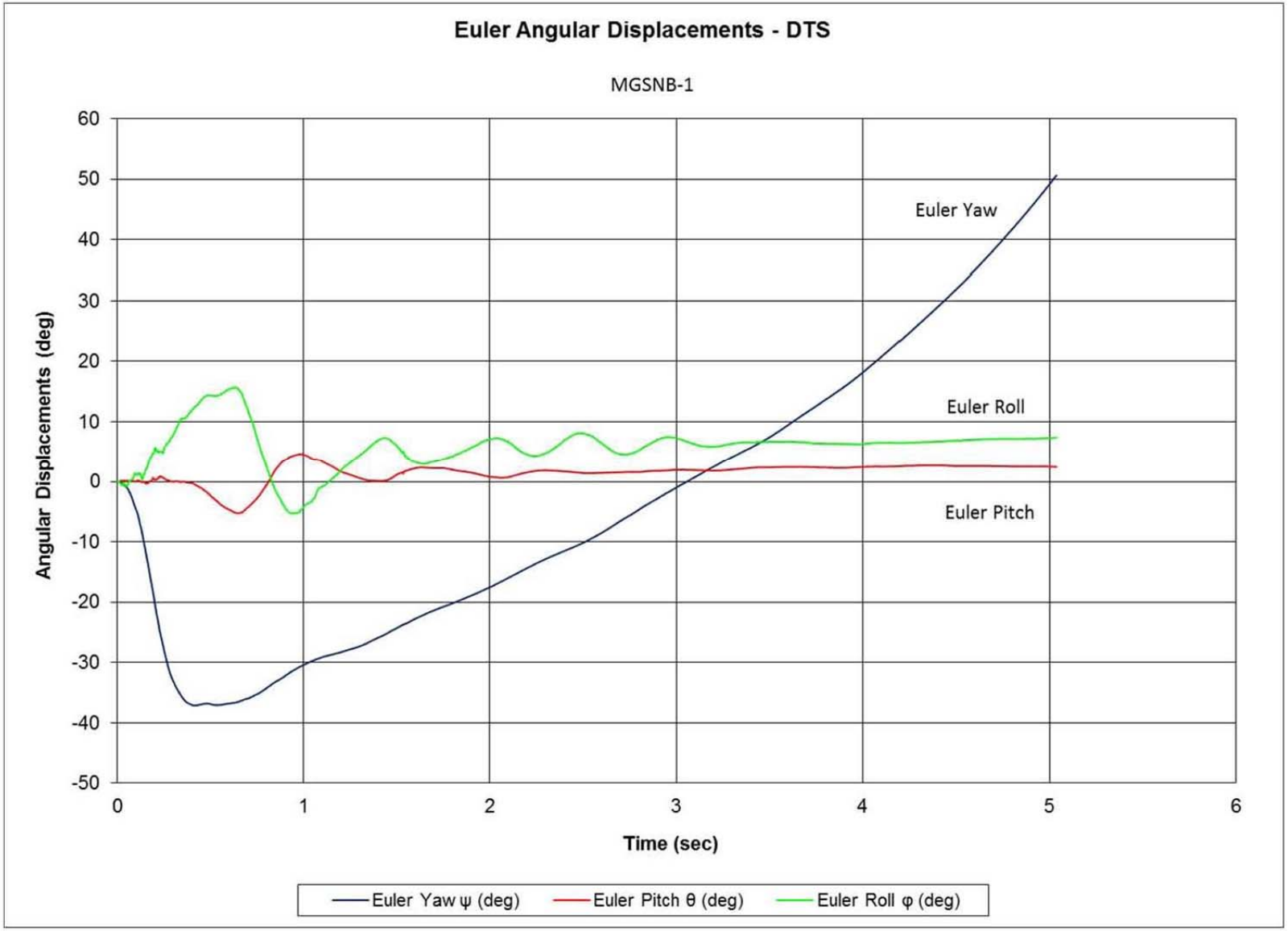

Figure E-7. Vehicle Angular Displacements (DTS), Test No. MGSNB-1

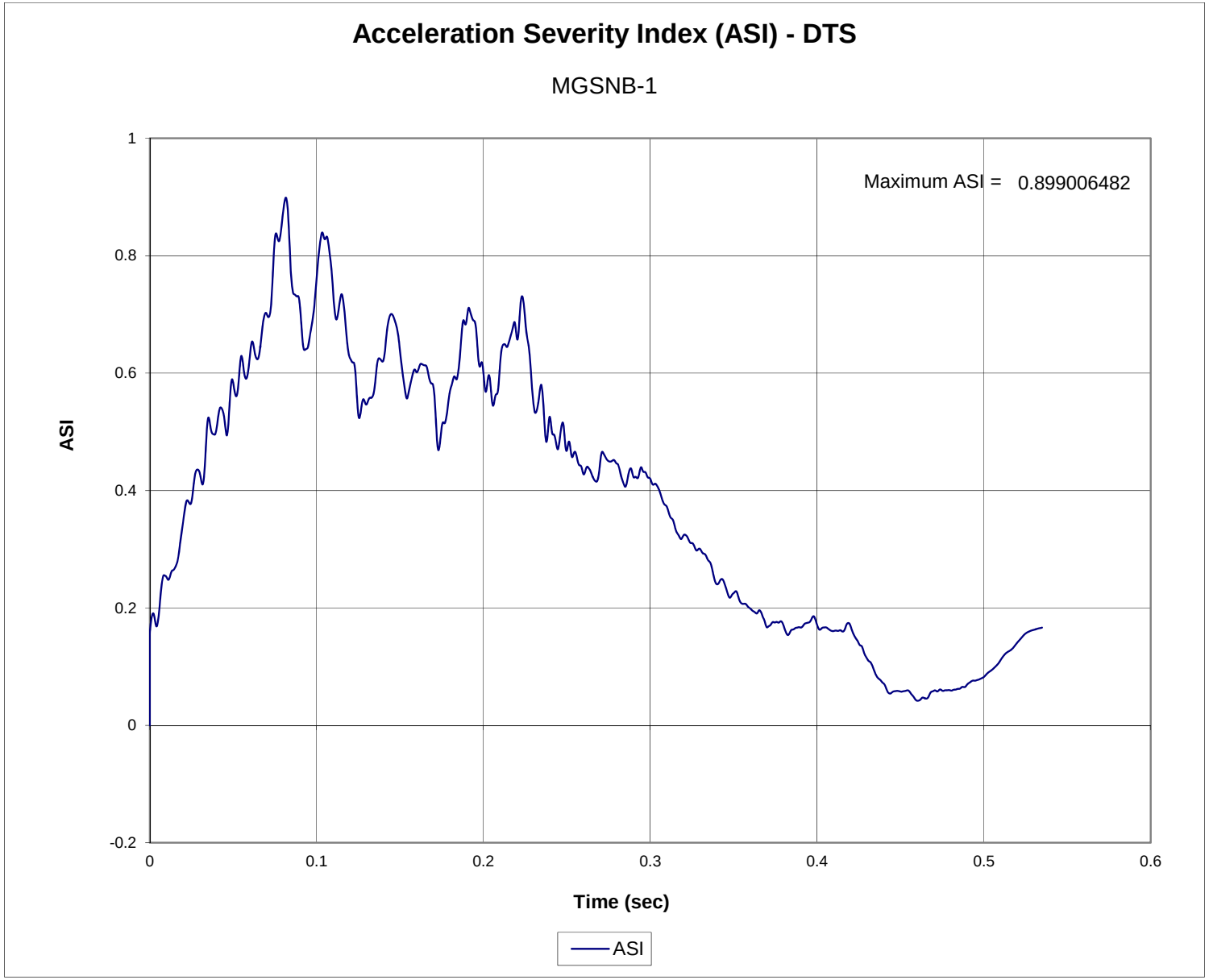

Figure E-8. Acceleration Severity Index (DTS), Test No. MGSNB-1

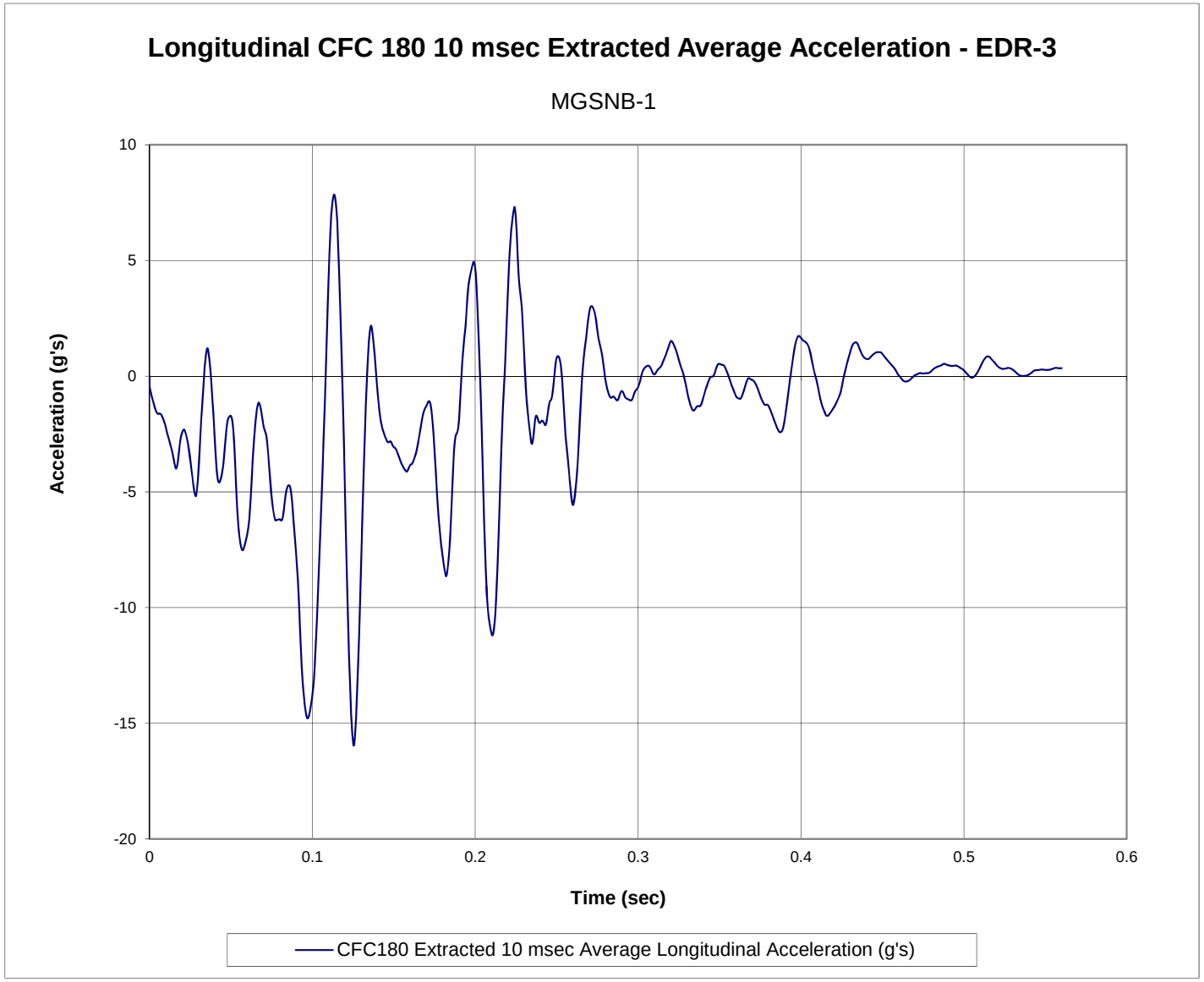

Figure E-9. 10-ms Average Longitudinal Deceleration (EDR-3), Test No. MGSNB-1

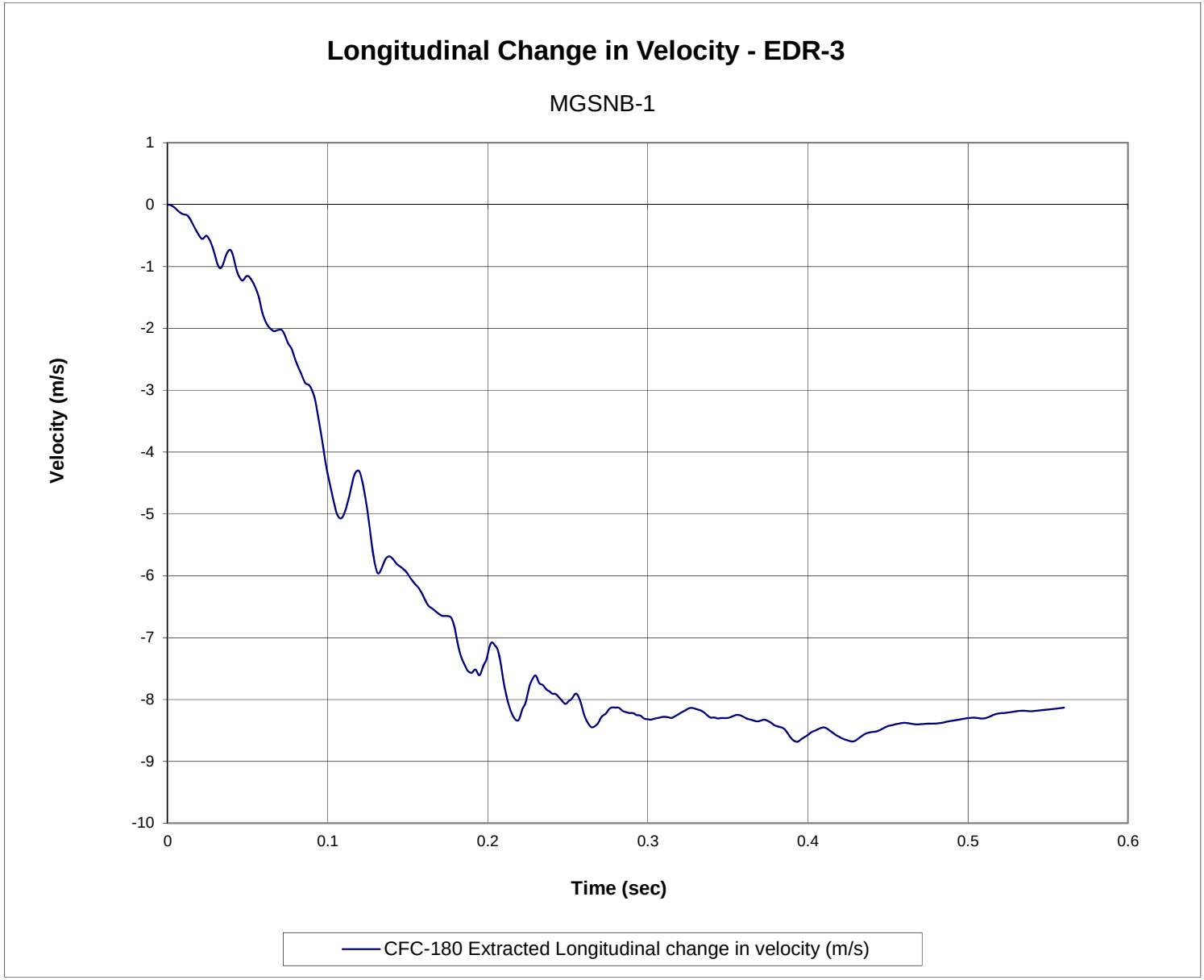

Figure E-10. Longitudinal Occupant Impact Velocity (EDR-3), Test No. MGSNB-1

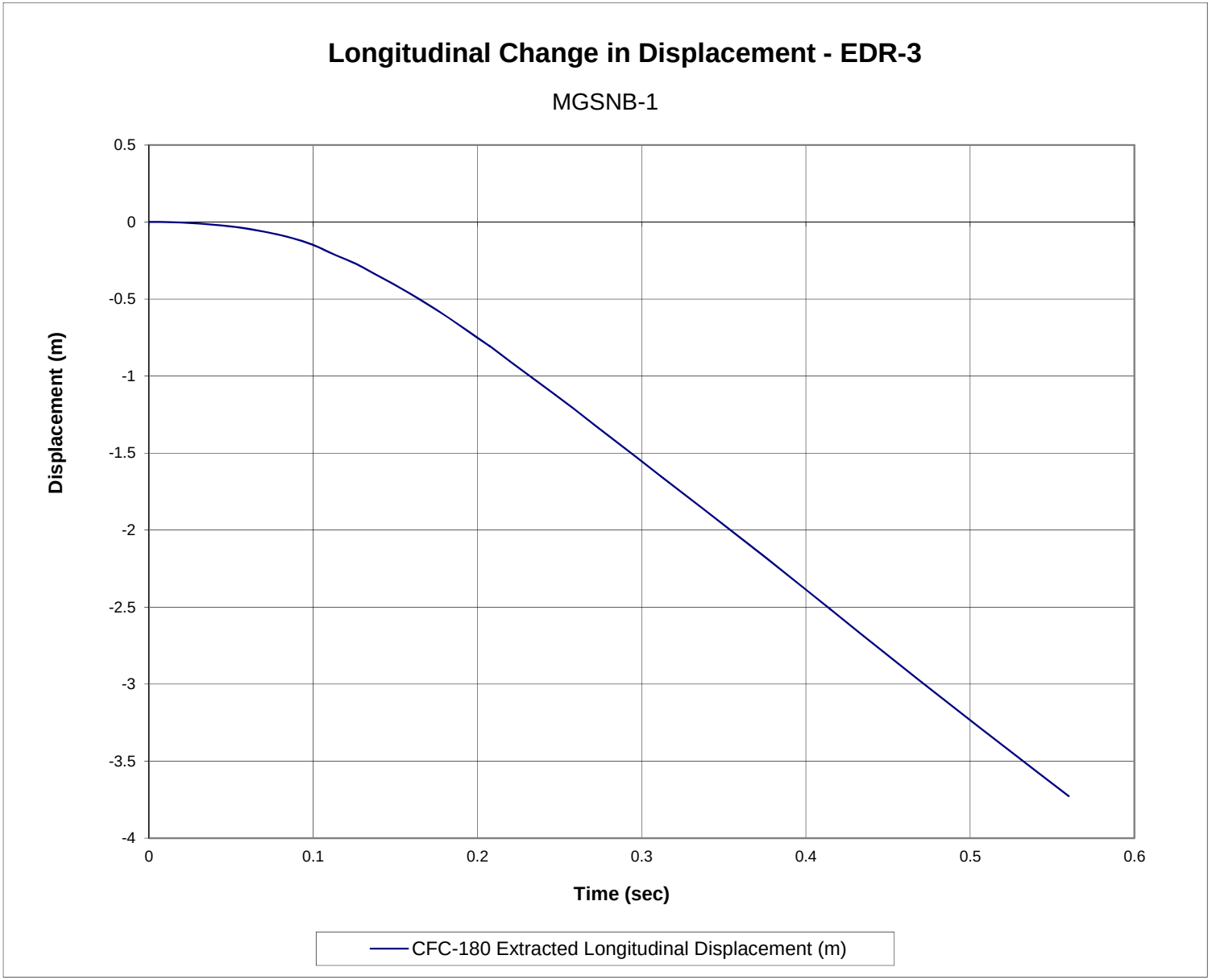

Figure E-11. Longitudinal Occupant Displacement (EDR-3), Test No. MGSNB-1

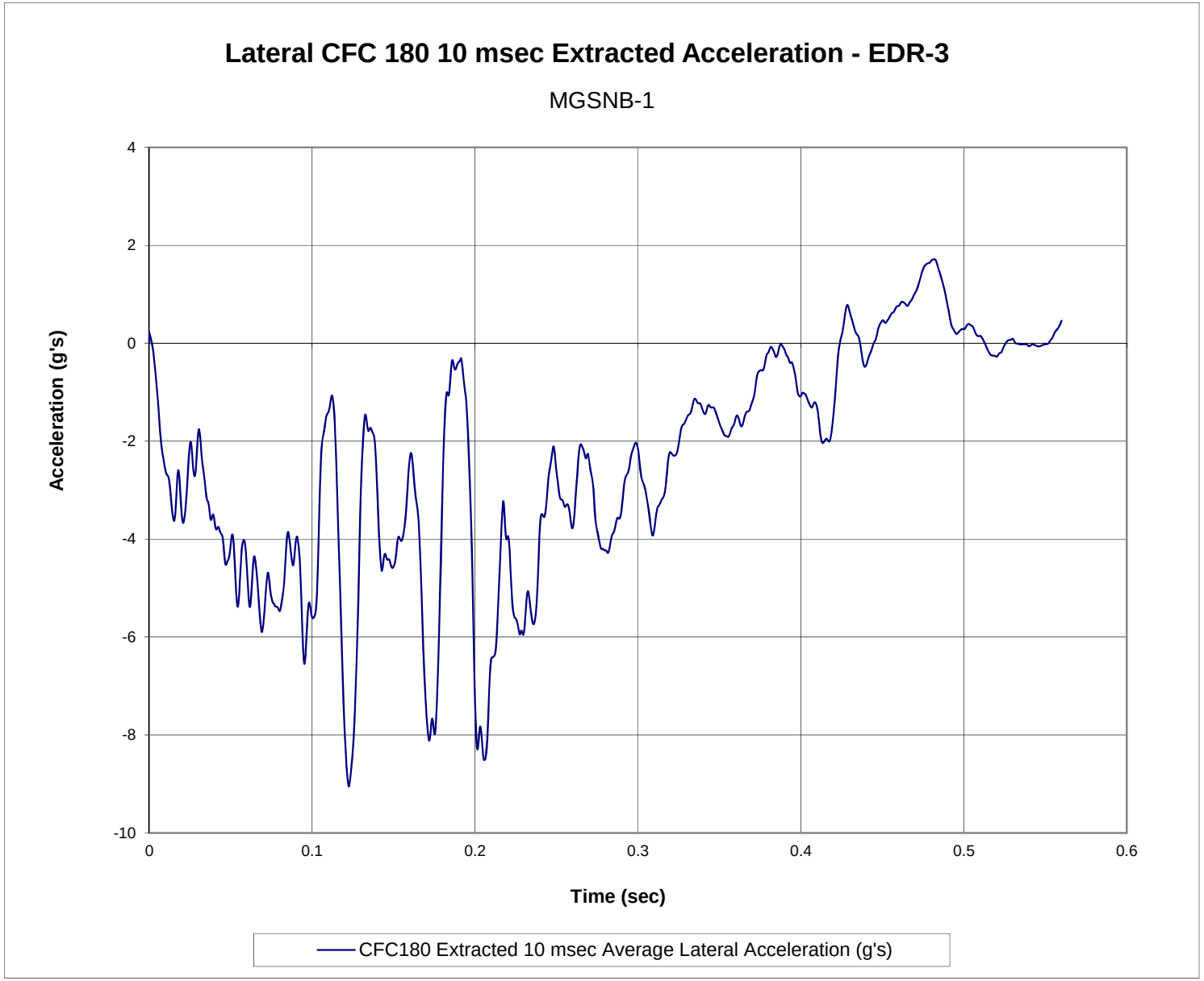

Figure E-12. 10-ms Average Lateral Deceleration (EDR-3), Test No. MGSNB-1

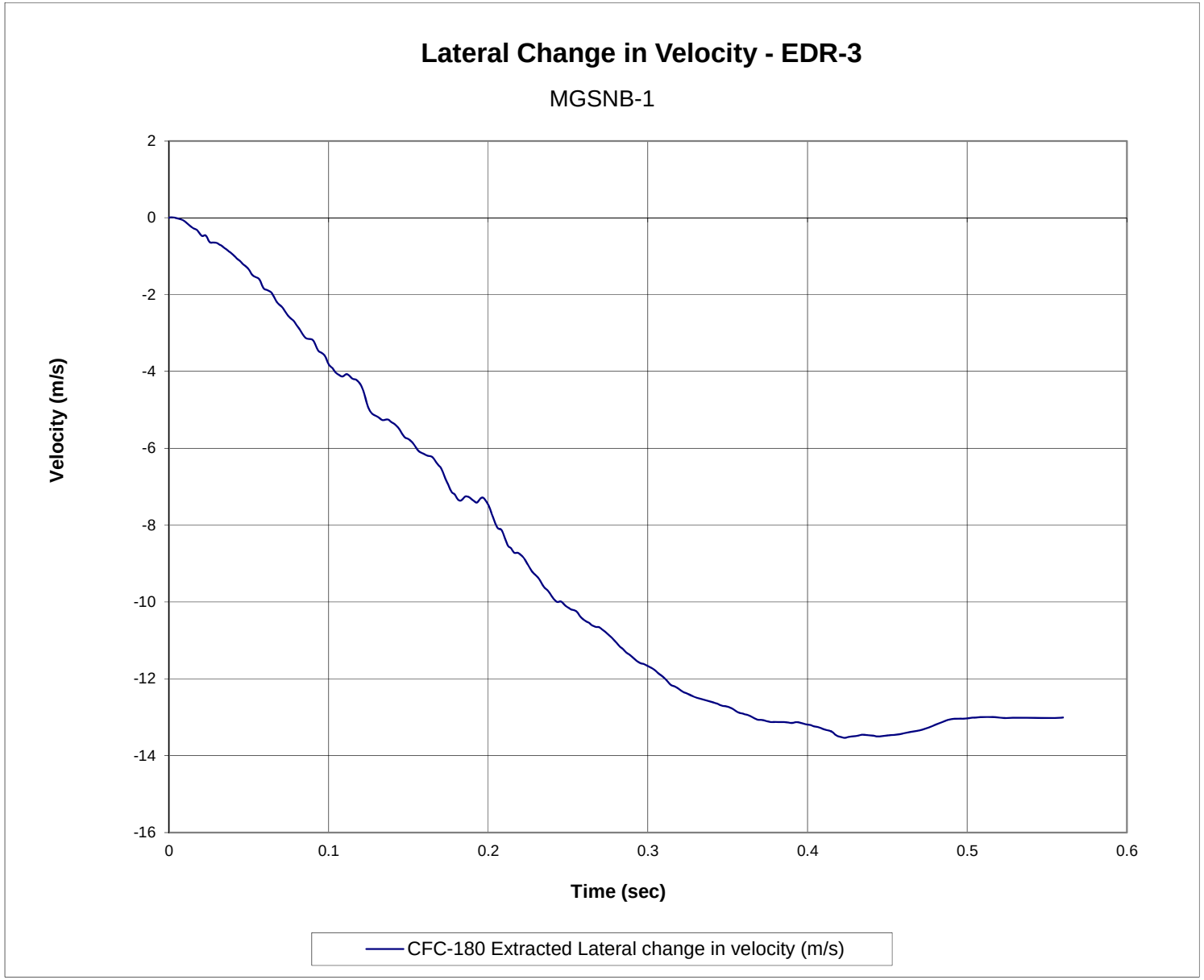

Figure E-13. Lateral Occupant Impact Velocity (EDR-3), Test No. MGSNB-1

Figure E-14. Lateral Occupant Displacement (EDR-3), Test No. MGSNB-1

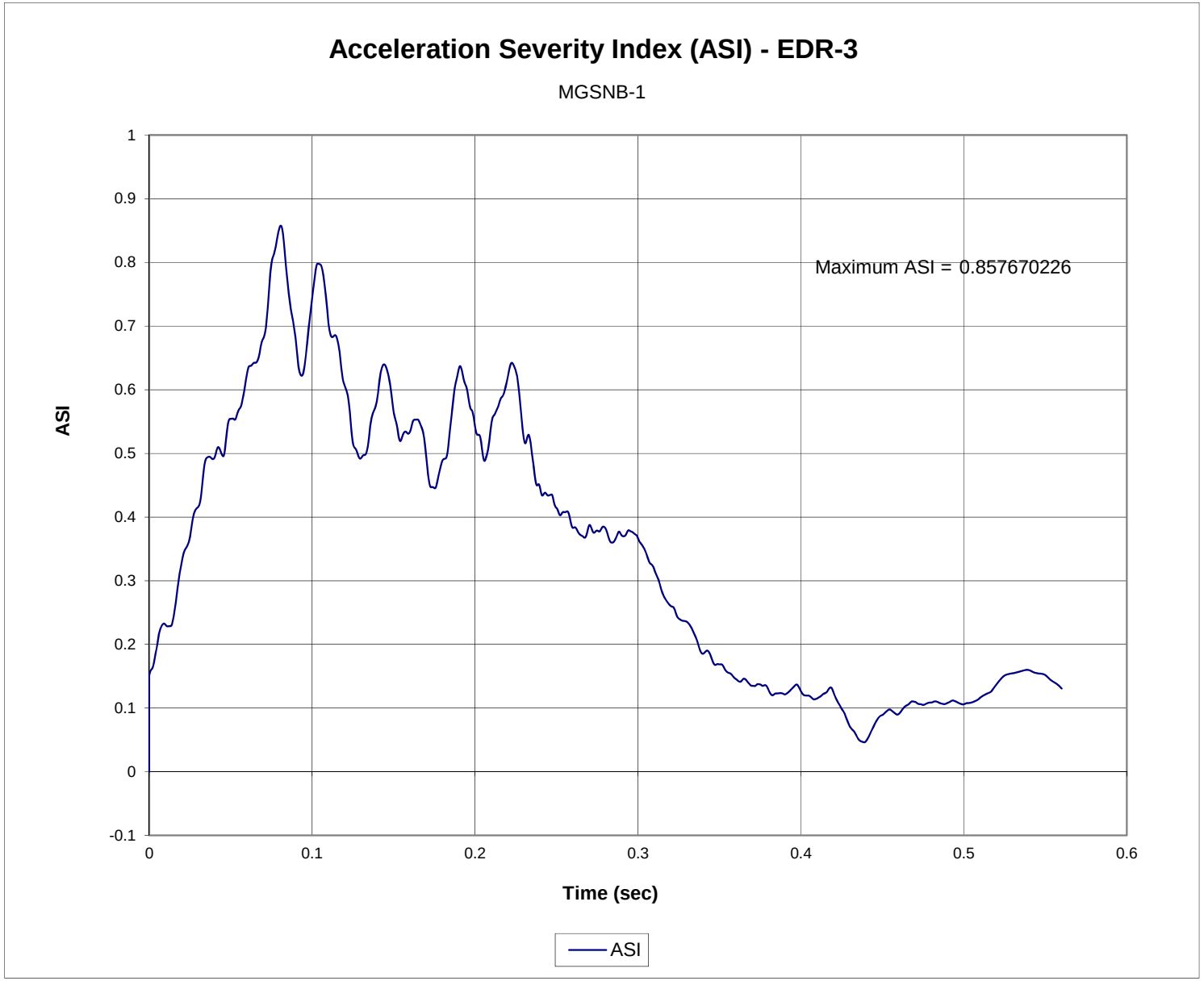

Figure E-15. Acceleration Severity Index (EDR-3), Test No. MGSNB-1

Appendix F. Accelerometer and Rate Transducer Data Plots, Test No. MGSNB-2

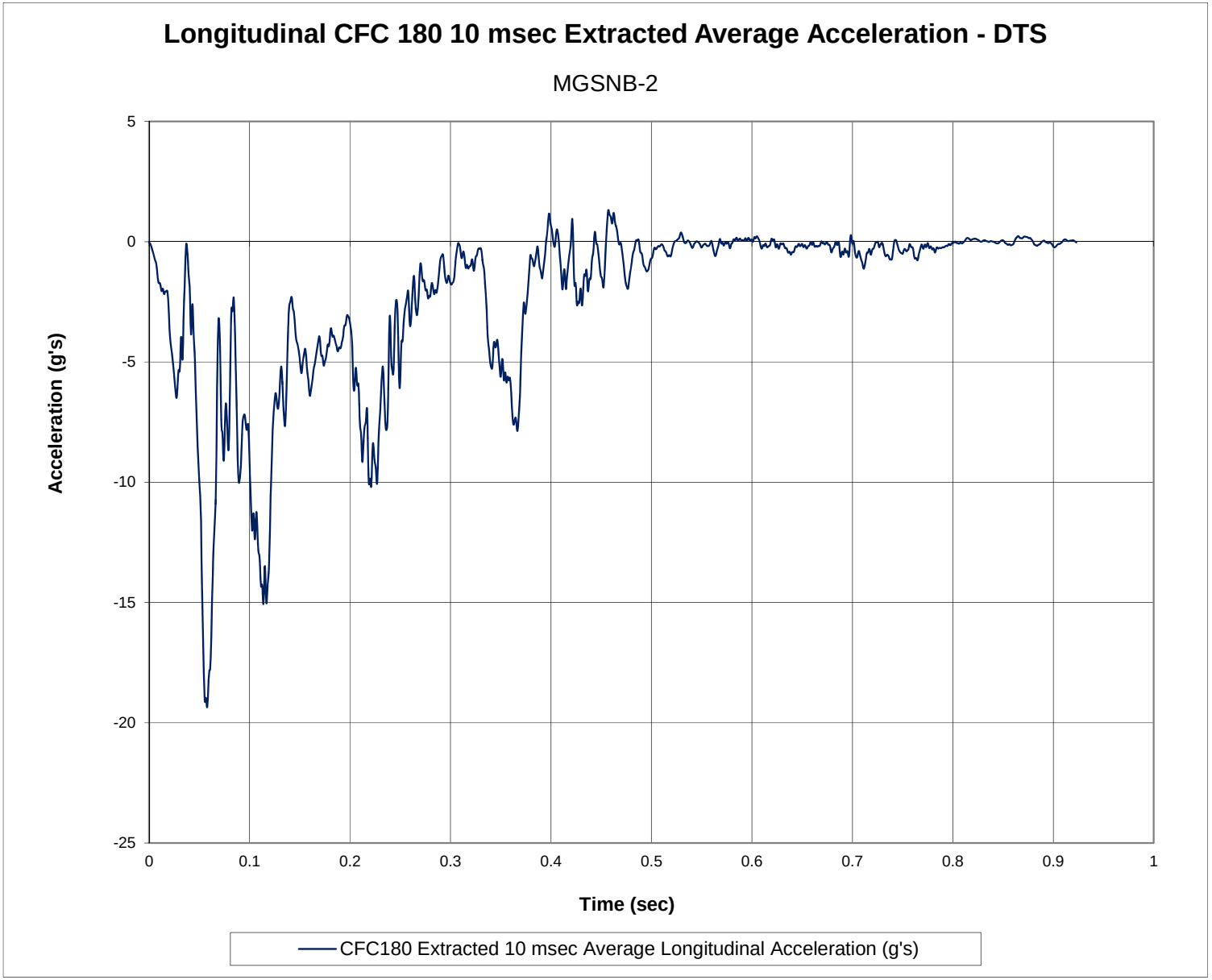

Figure F-1. 10-ms Average Longitudinal Deceleration (DTS), Test No. MGSNB-2

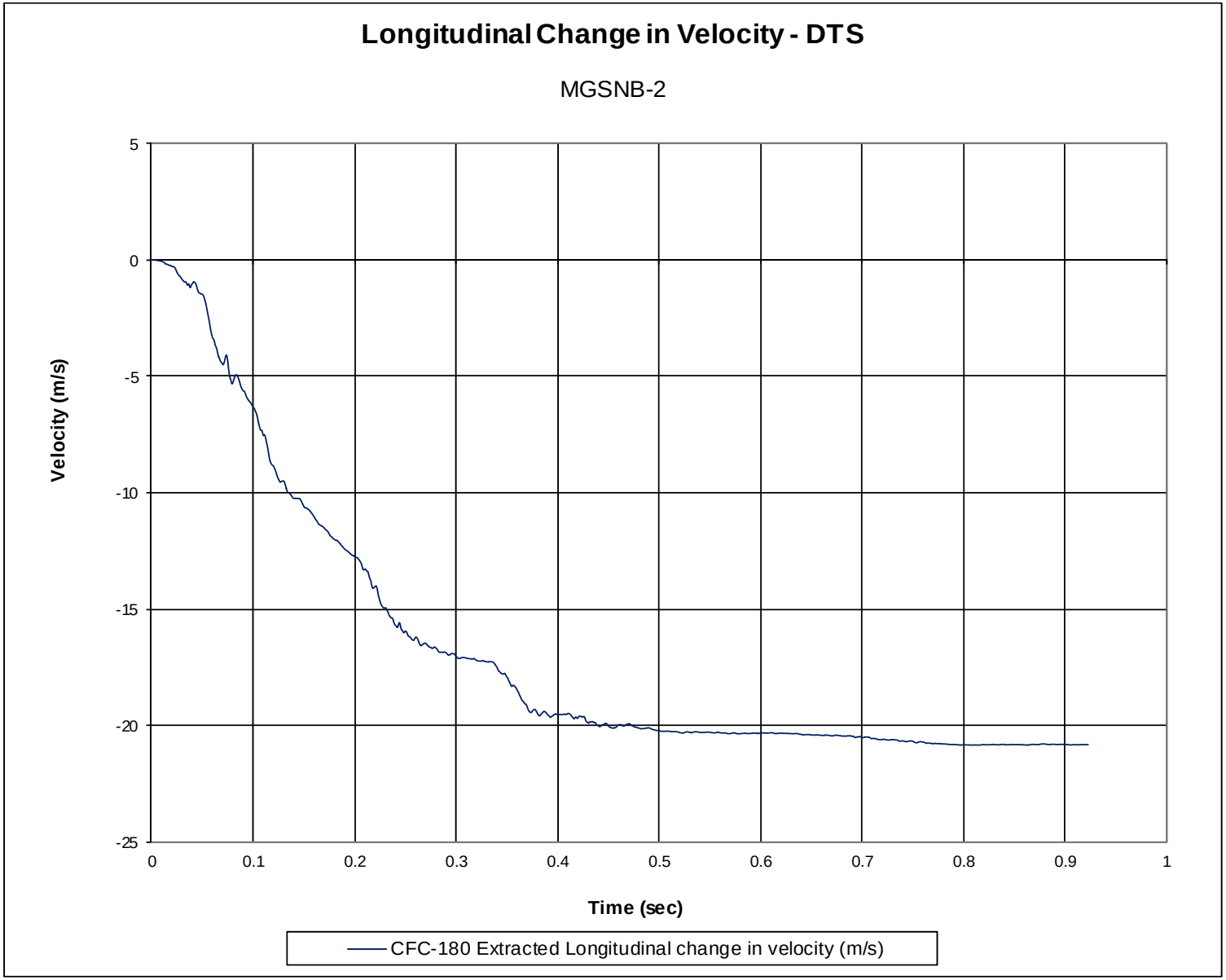

Figure F-2. Longitudinal Occupant Impact Velocity (DTS), Test No. MGSNB-2

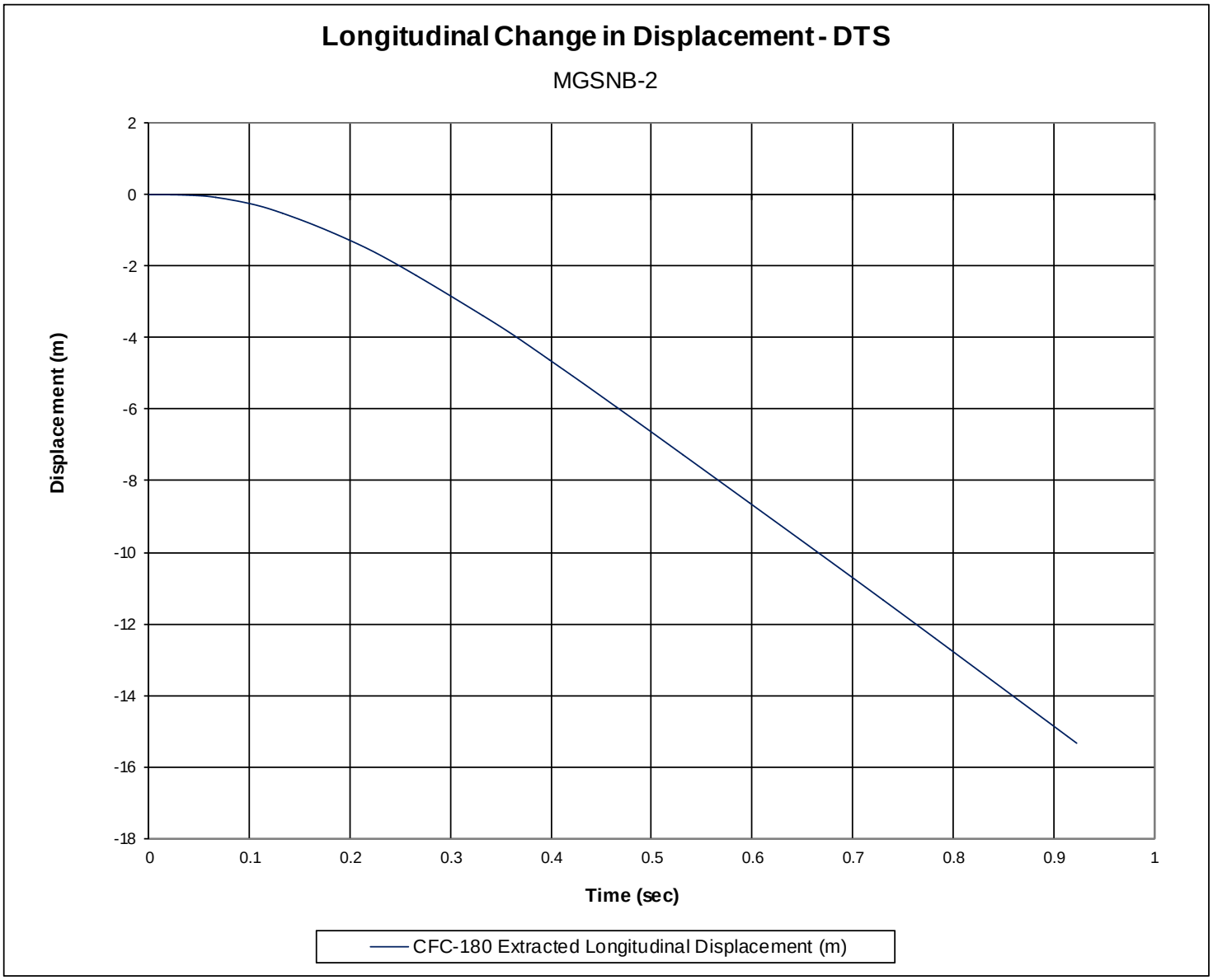

Figure F-3. Longitudinal Occupant Displacement (DTS), Test No. MGSNB-2

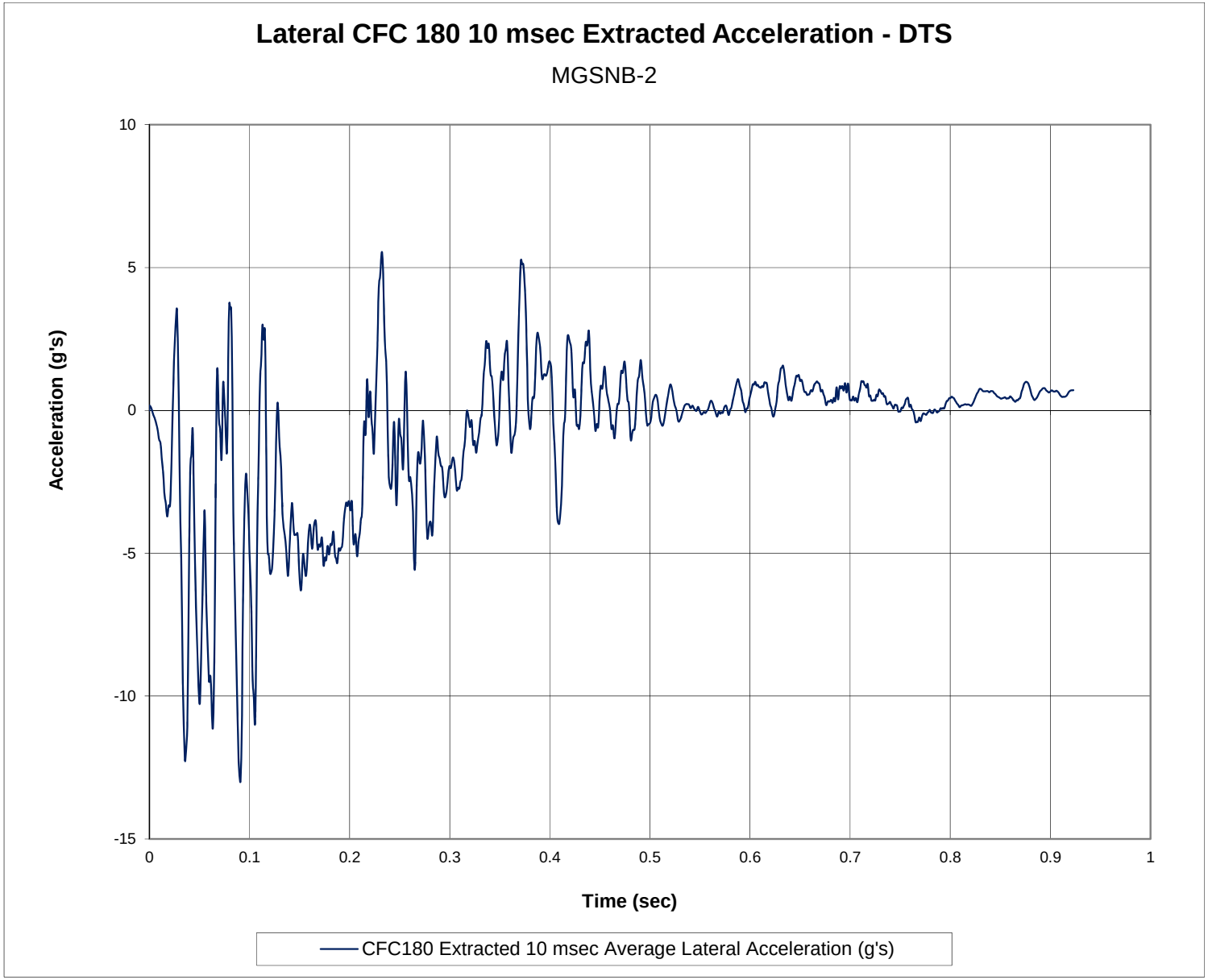

Figure F-4. 10-ms Average Lateral Deceleration (DTS), Test No. MGSNB-2

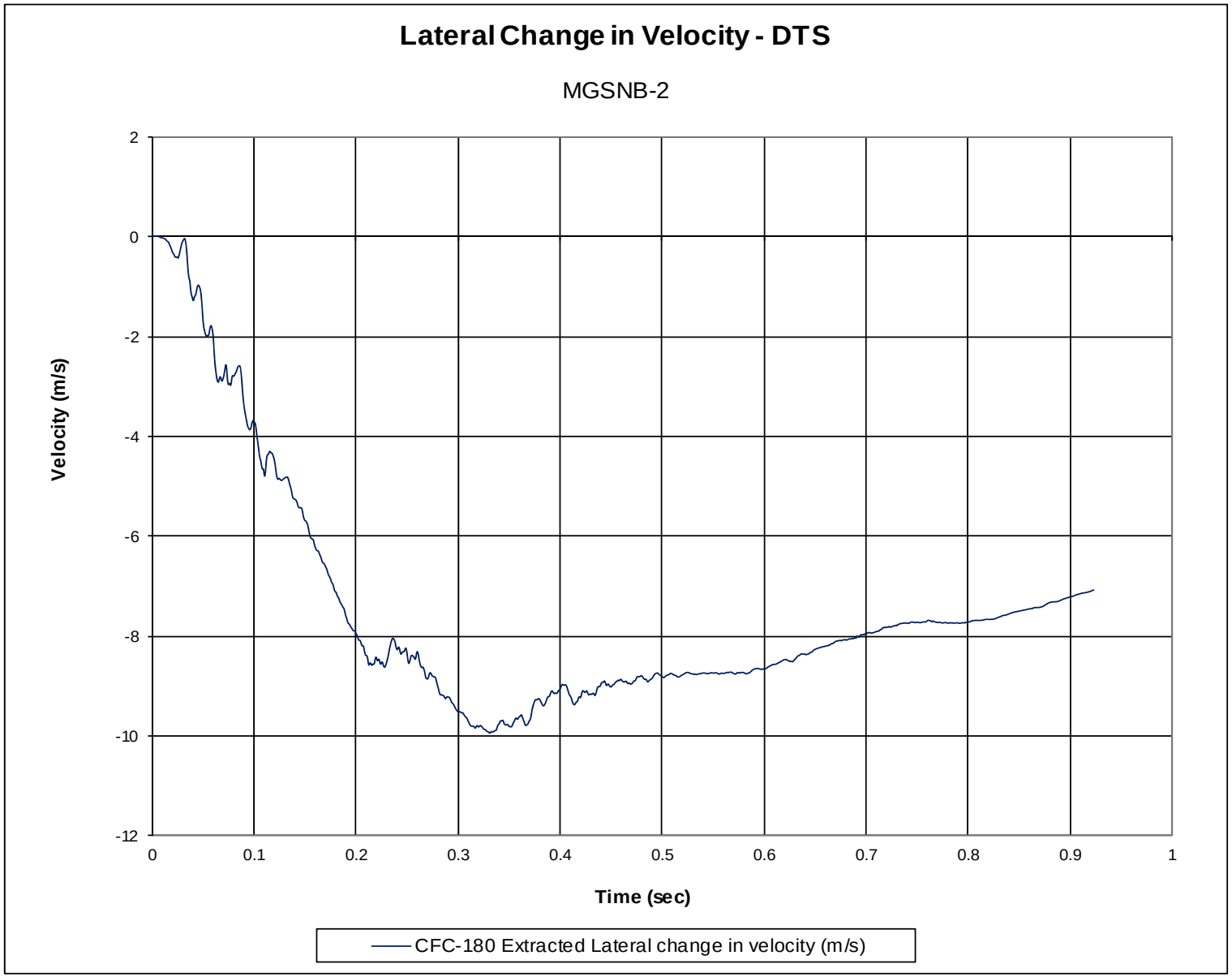

Figure F-5. Lateral Occupant Impact Velocity (DTS), Test No. MGSNB-2

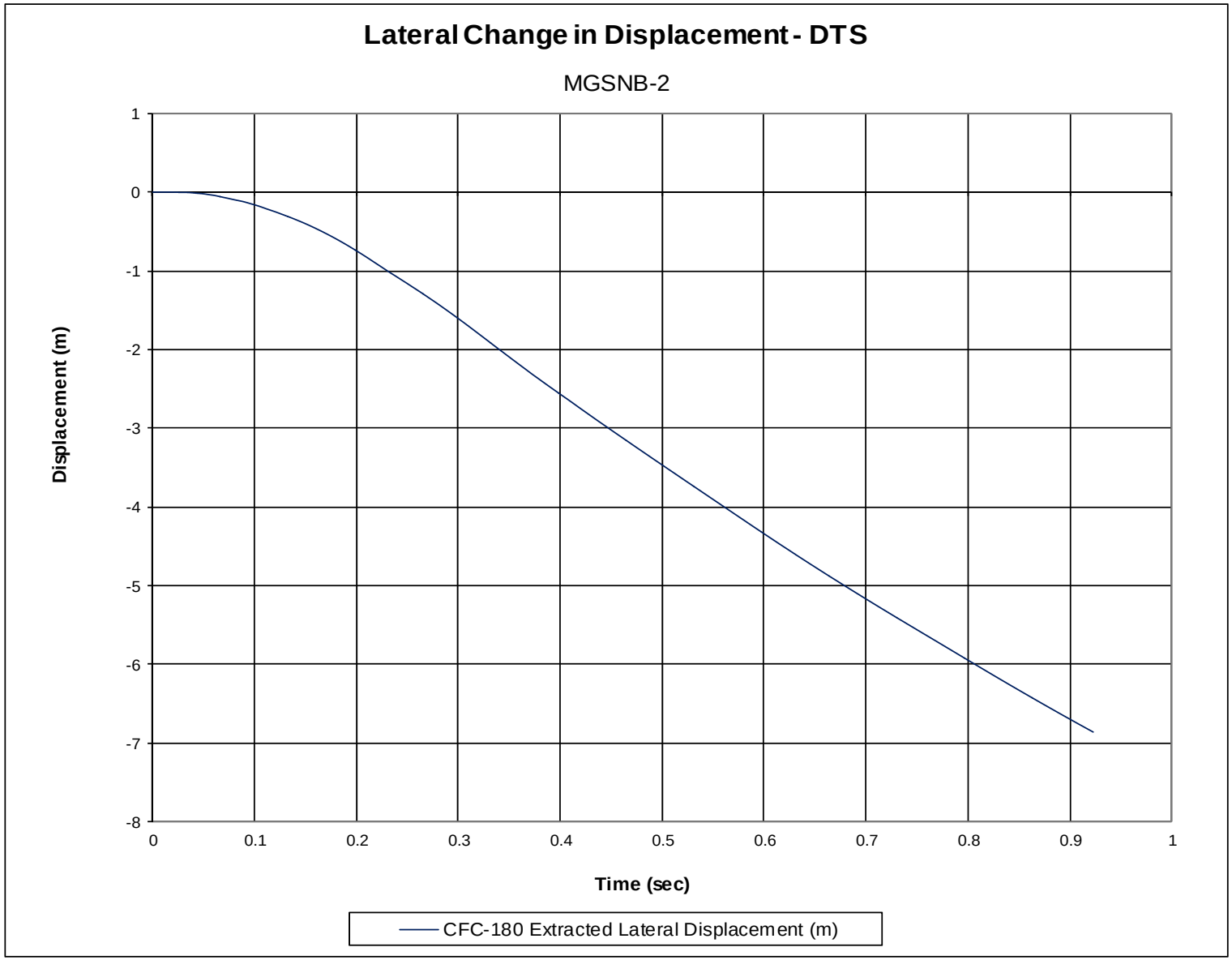

Figure F-6. Lateral Occupant Displacement (DTS), Test No. MGSNB-2

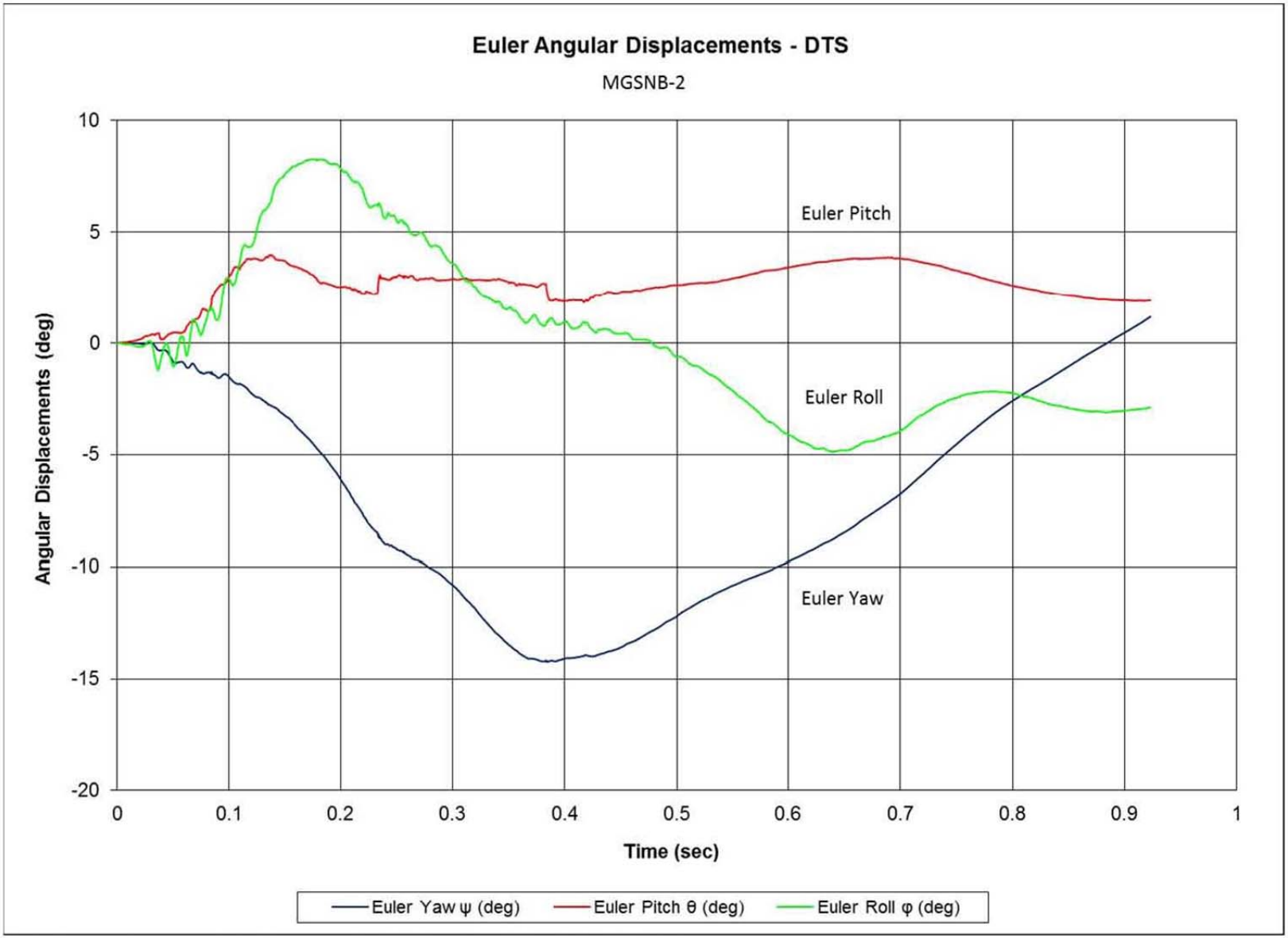

Figure F-7. Vehicle Angular Displacements (DTS), Test No. MGSNB-2

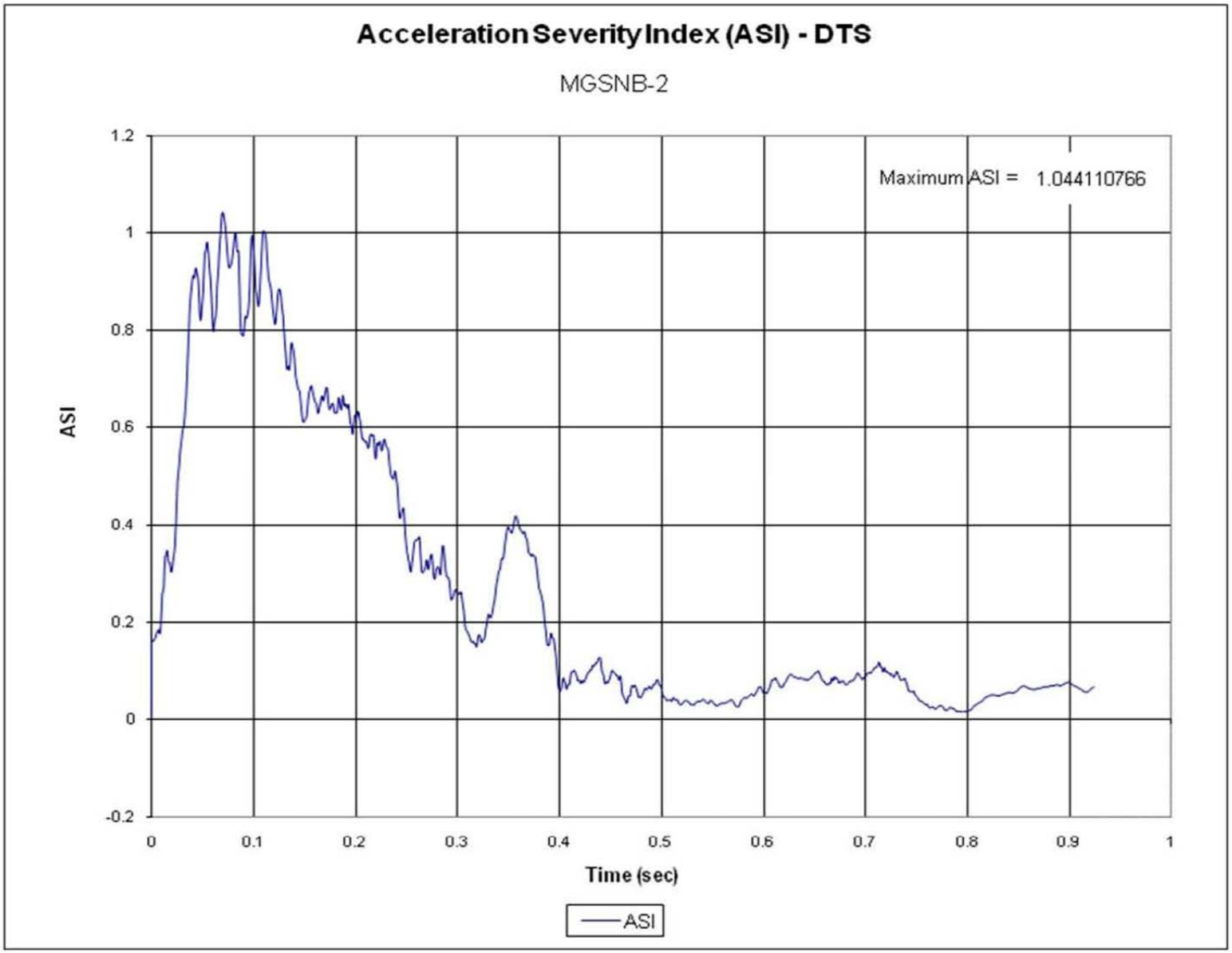

Figure F-8. Acceleration Severity Index (DTS), Test No. MGSNB-2

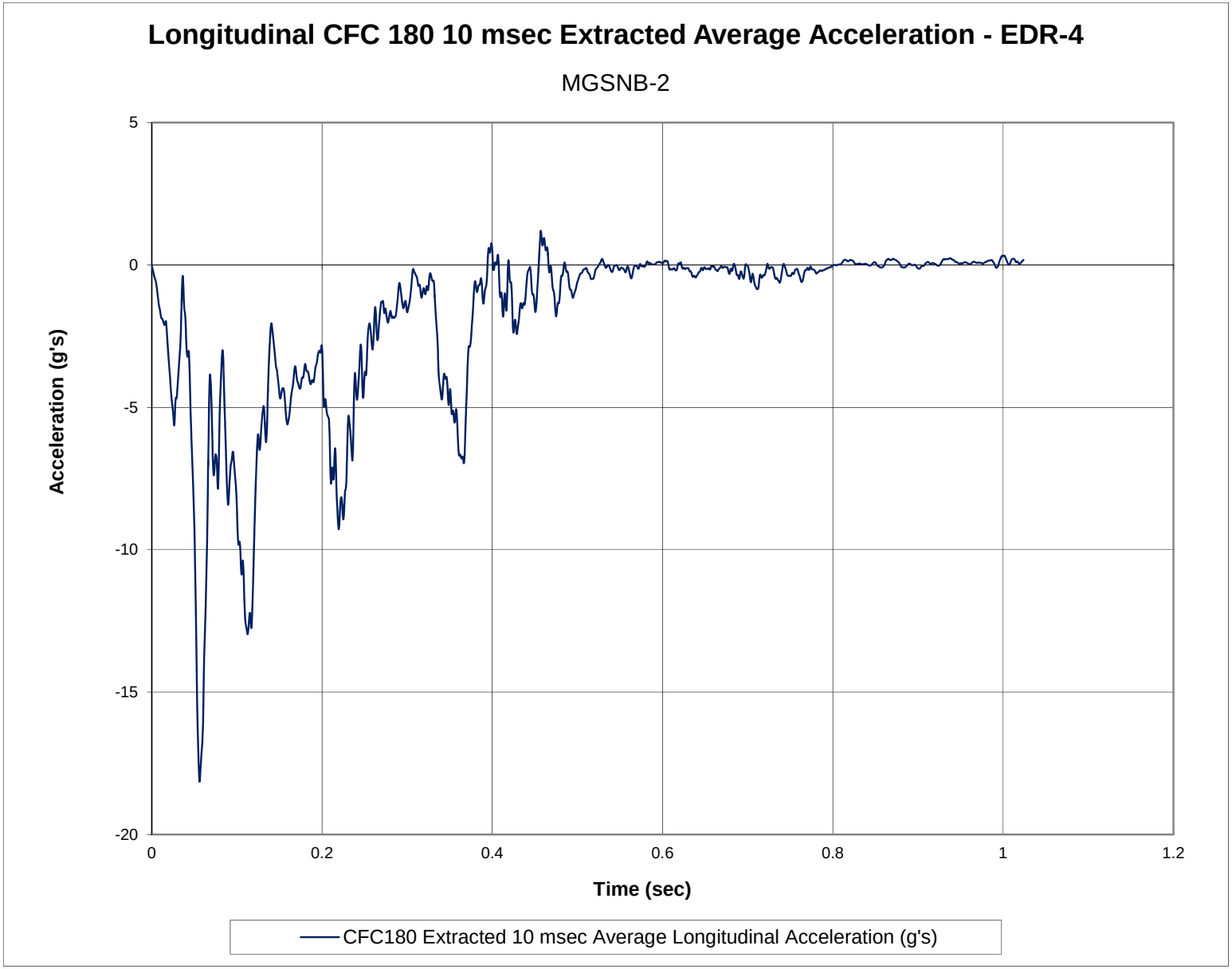

Figure F-9. 10-ms Average Longitudinal Deceleration (EDR-4), Test No. MGSNB-2

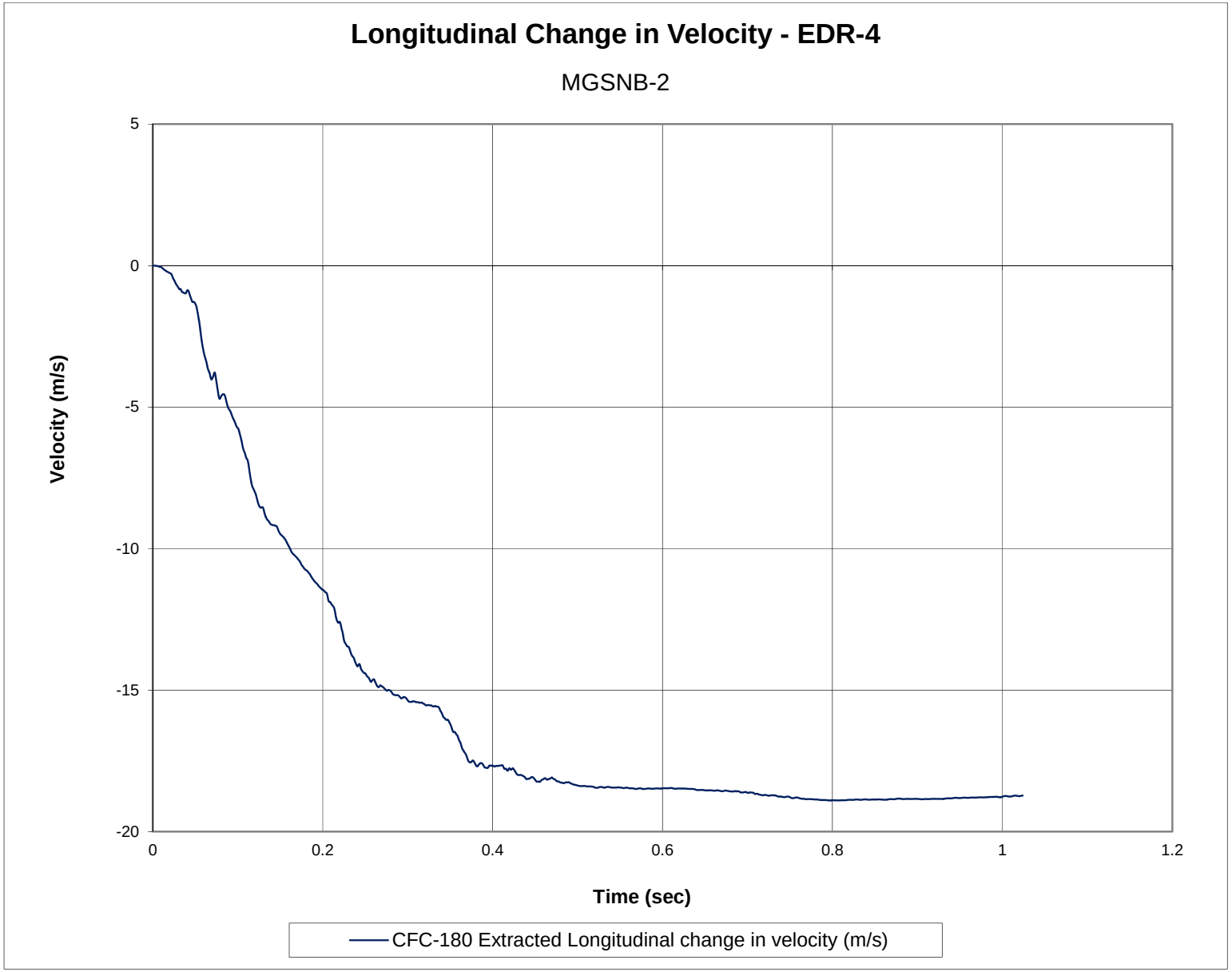

Figure F-10. Longitudinal Occupant Impact Velocity (EDR-4), Test No. MGSNB-2

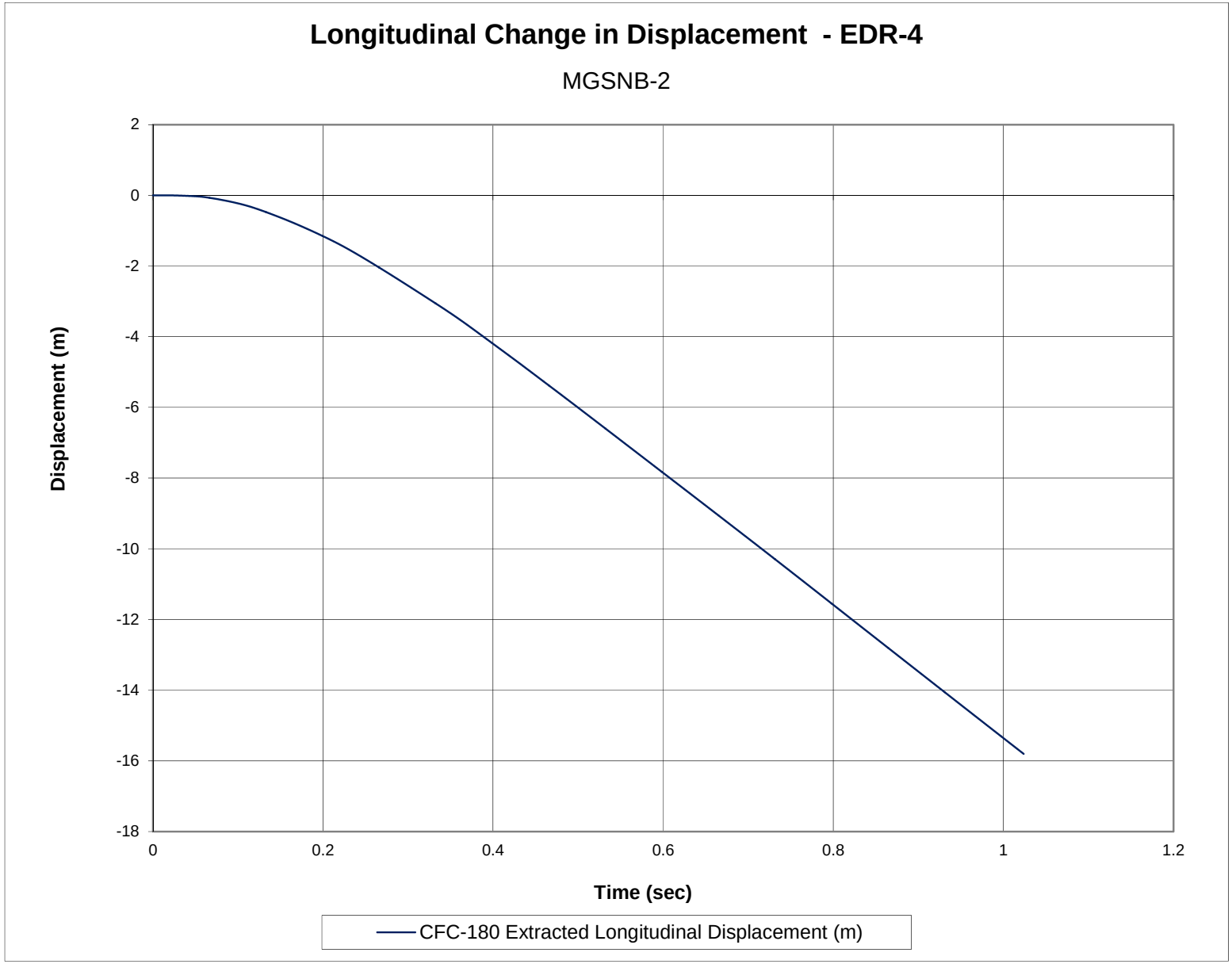

Figure F-11. Longitudinal Occupant Displacement (EDR-4), Test No. MGSNB-2

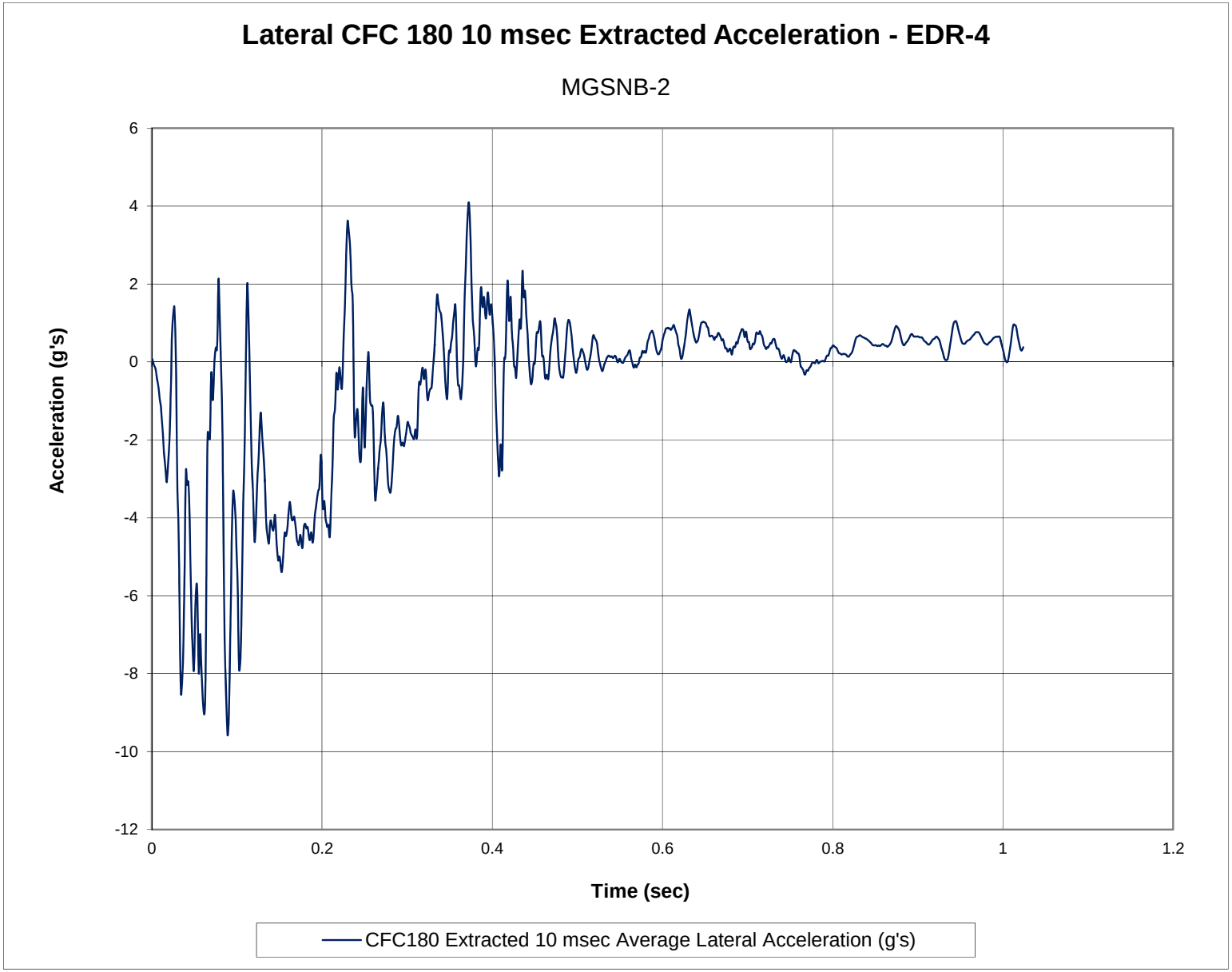

Figure F-12. 10-ms Average Lateral Deceleration (EDR-4), Test No. MGSNB-2

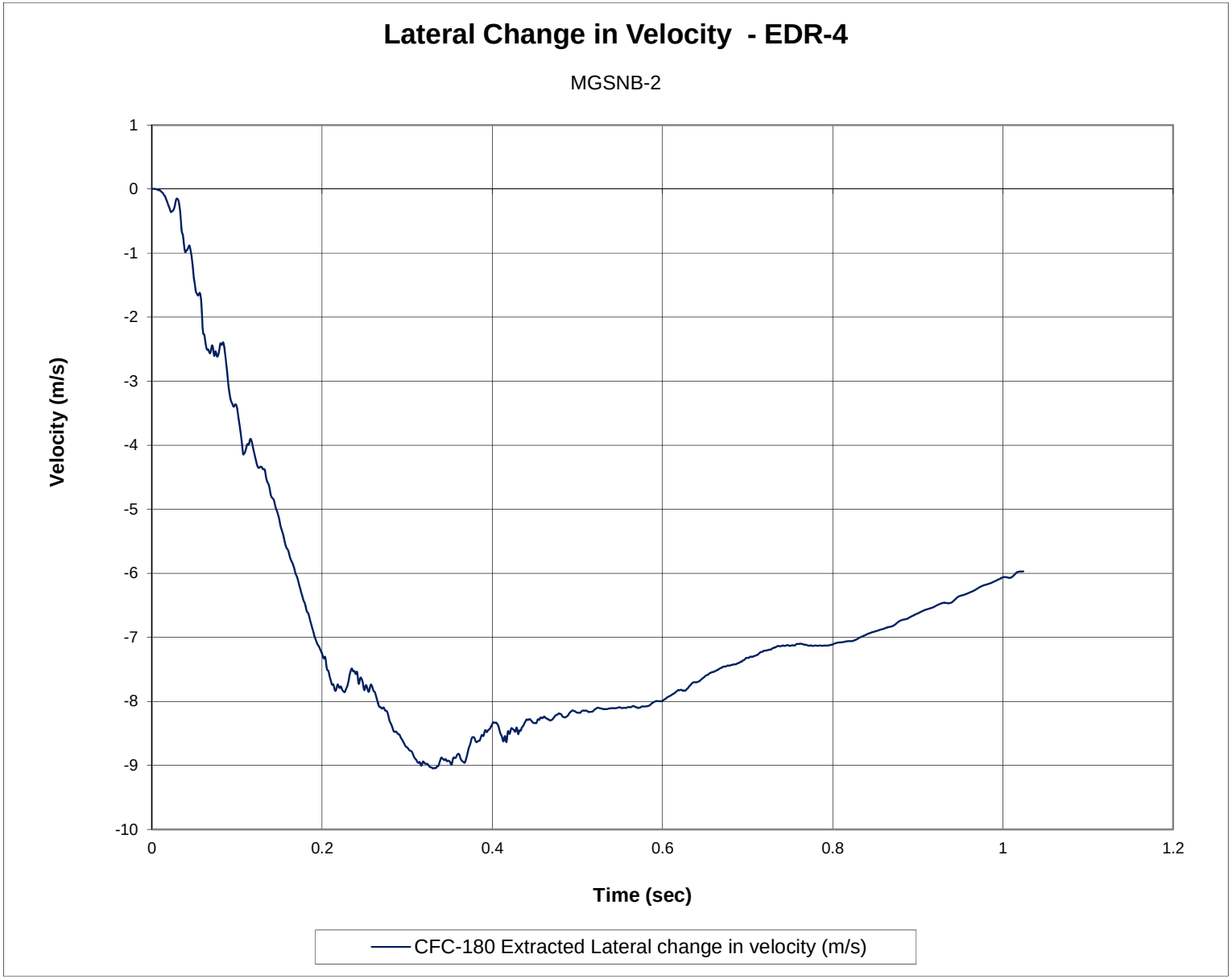

Figure F-13. Lateral Occupant Impact Velocity (EDR-4), Test No. MGSNB-2

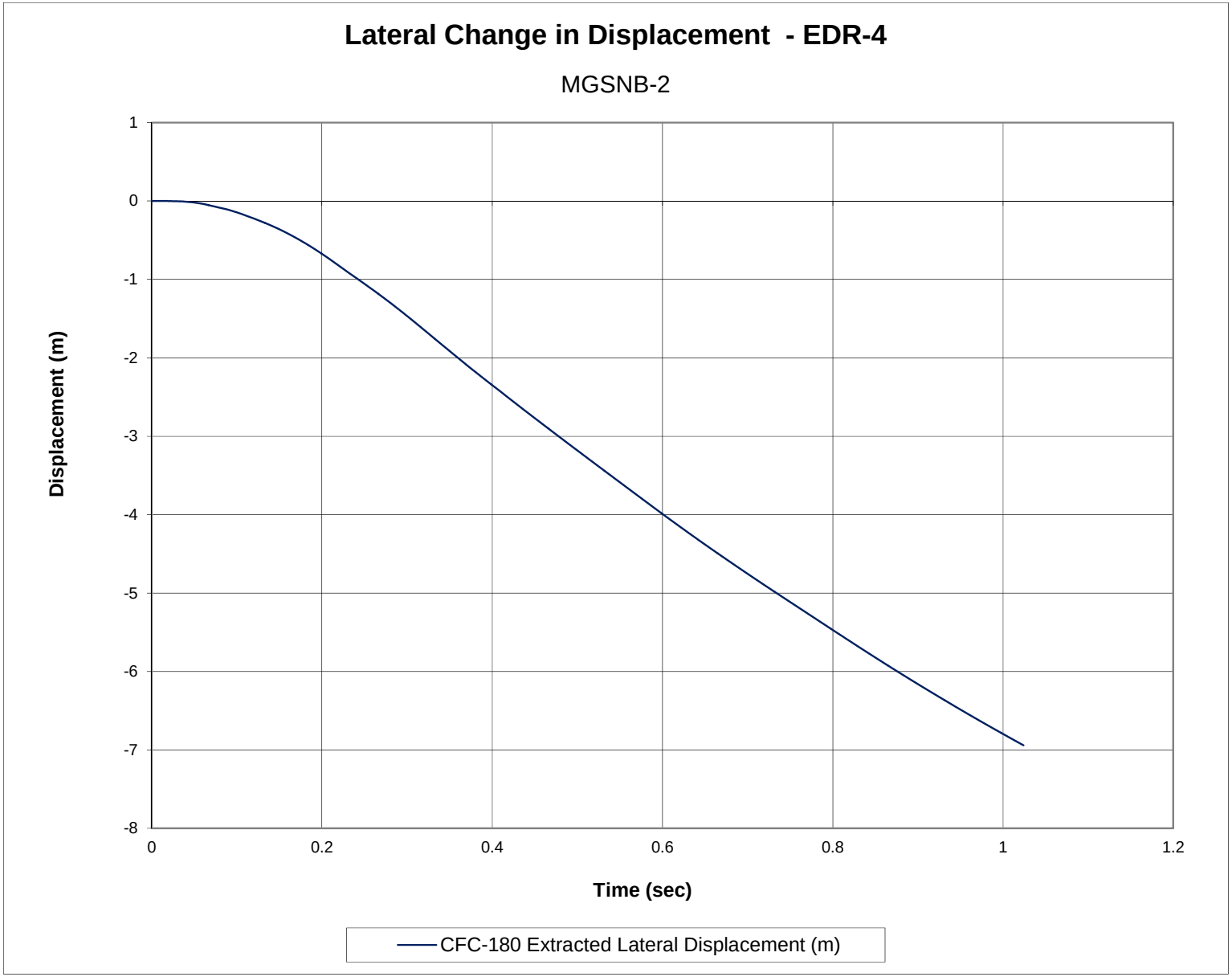

Figure F-14. Lateral Occupant Displacement (EDR-4), Test No. MGSNB-2

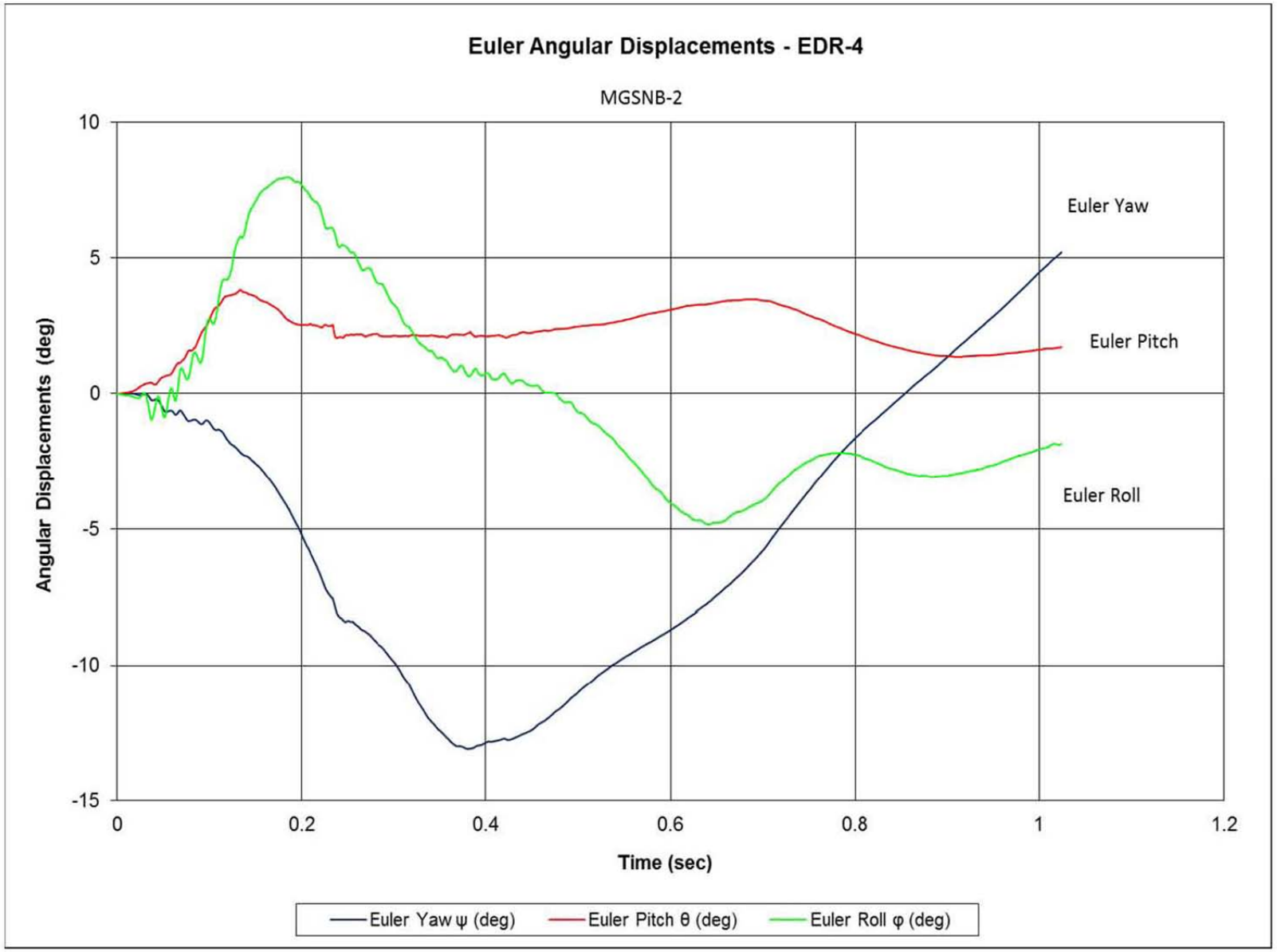

Figure F-15. Vehicle Angular Displacements (EDR-4), Test No. MGSNB-2

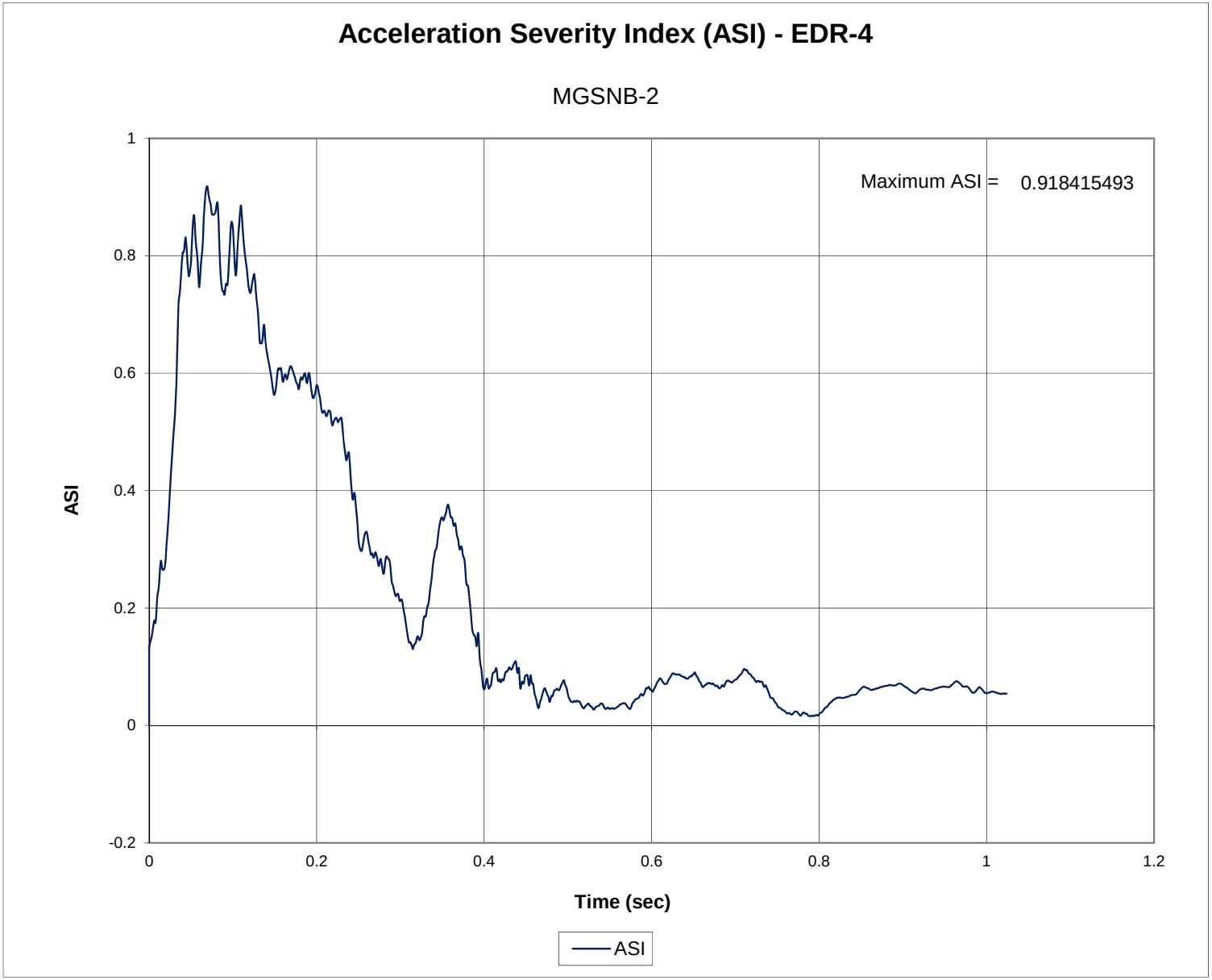

Figure F-16. Acceleration Severity Index (EDR-4), Test No. MGSNB-2

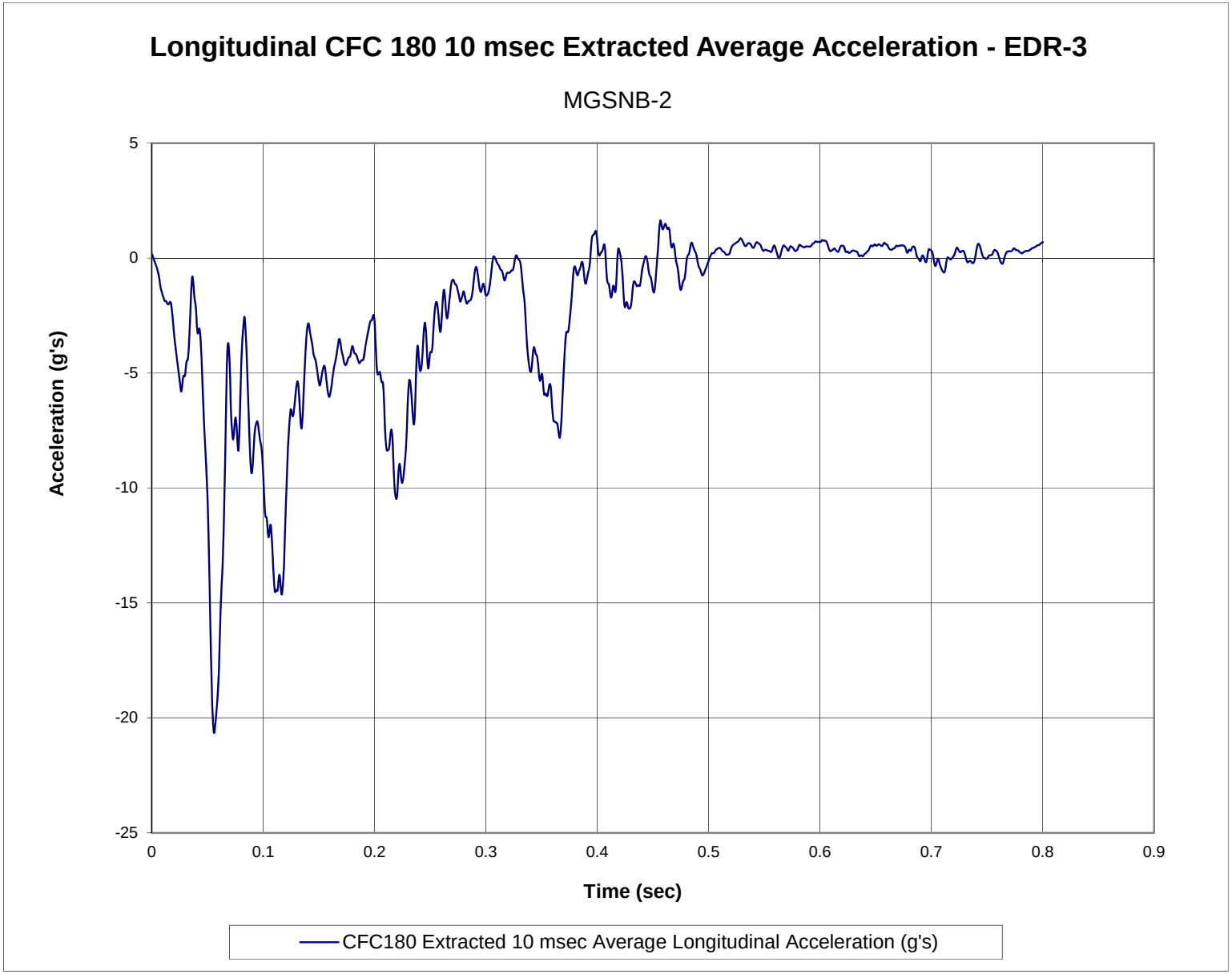

Figure F-17. 10-ms Average Longitudinal Deceleration (EDR-3), Test No. MGSNB-2

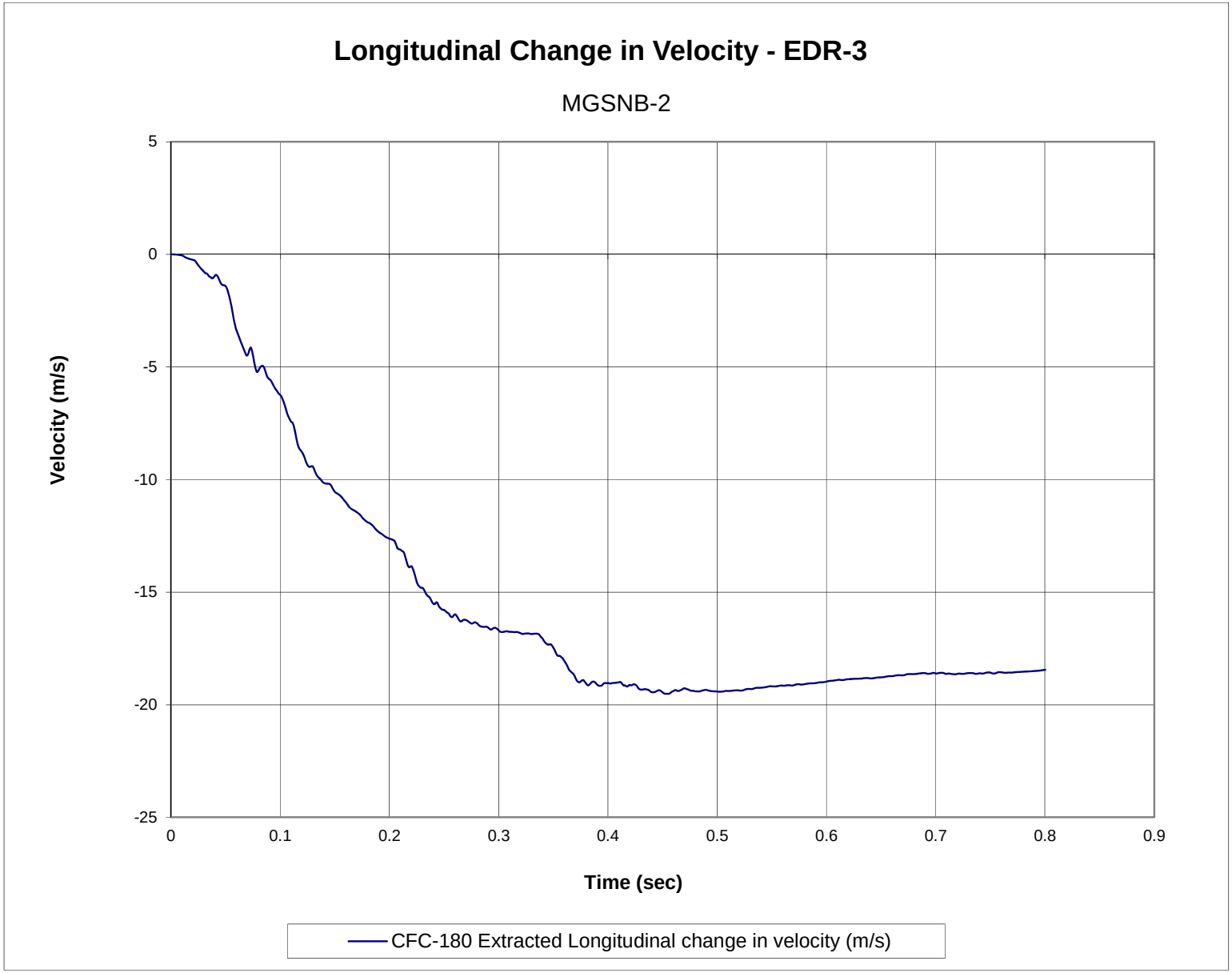

Figure F-18. Longitudinal Occupant Impact Velocity (EDR-3), Test No. MGSNB-2

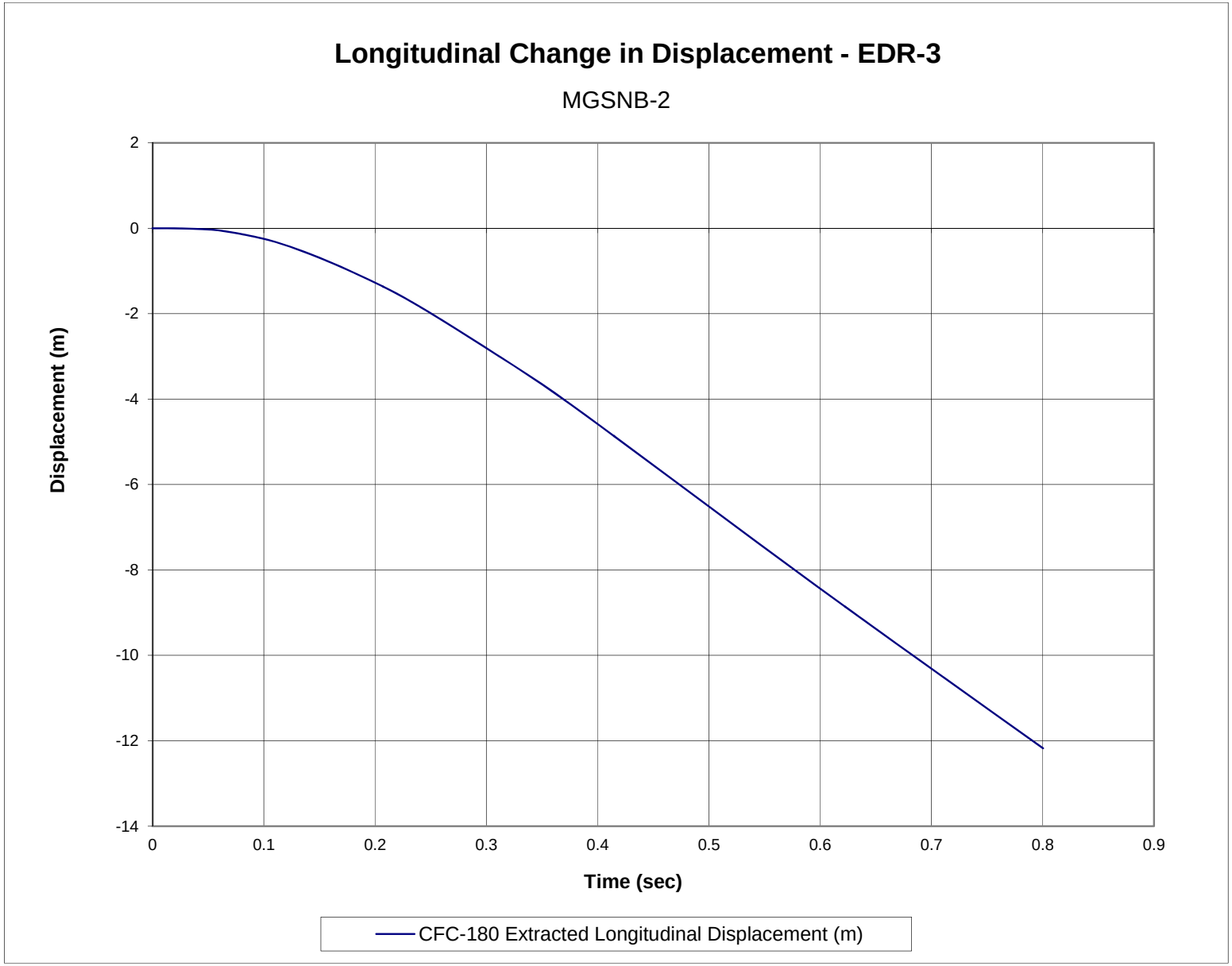

Figure F-19. Longitudinal Occupant Displacement (EDR-3), Test No. MGSNB-2

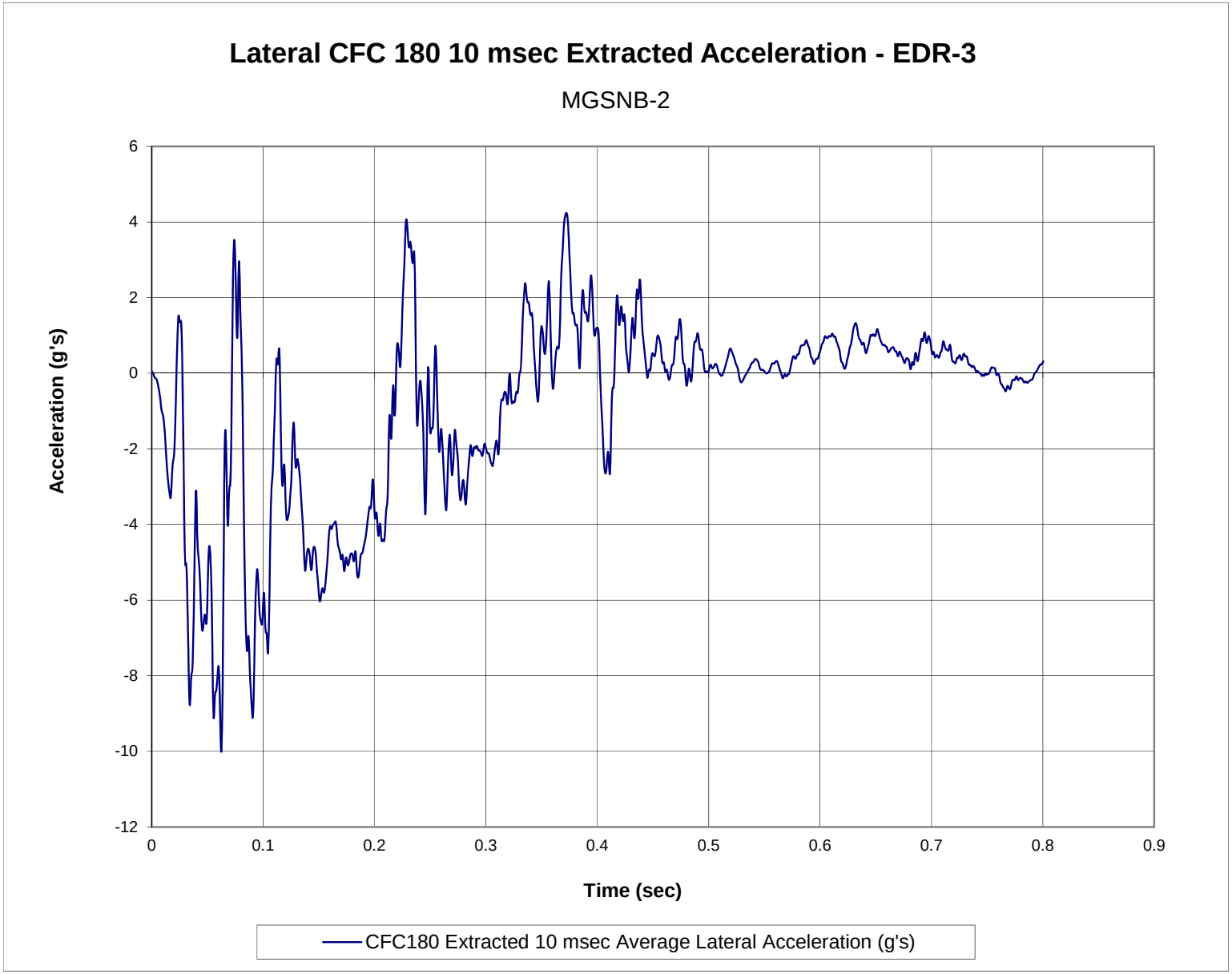

Figure F-20. 10-ms Average Lateral Deceleration (EDR-3), Test No. MGSNB-2

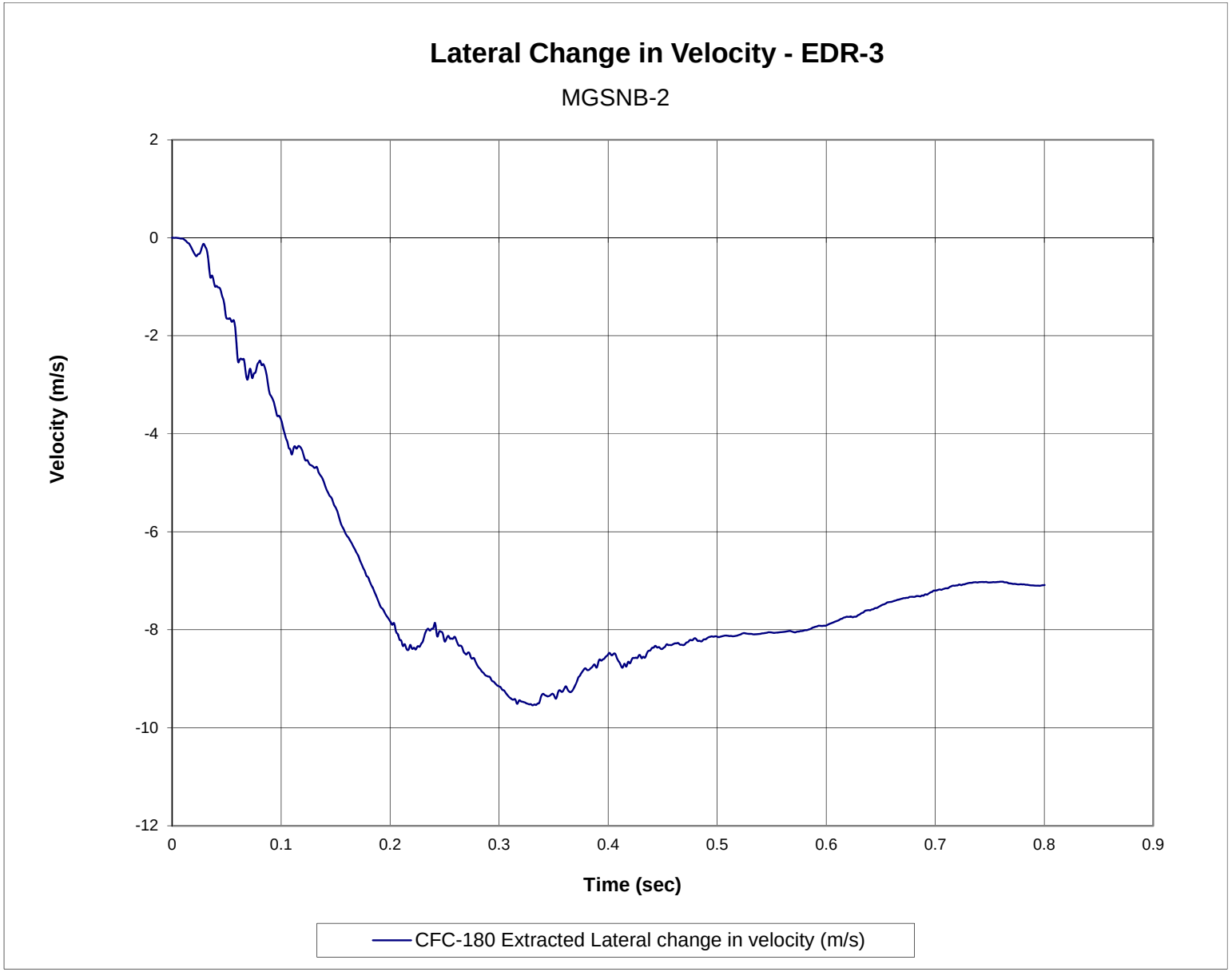

Figure F-21. Lateral Occupant Impact Velocity (EDR-3), Test No. MGSNB-2

Figure F-22. Lateral Occupant Displacement (EDR-3), Test No. MGSNB-2

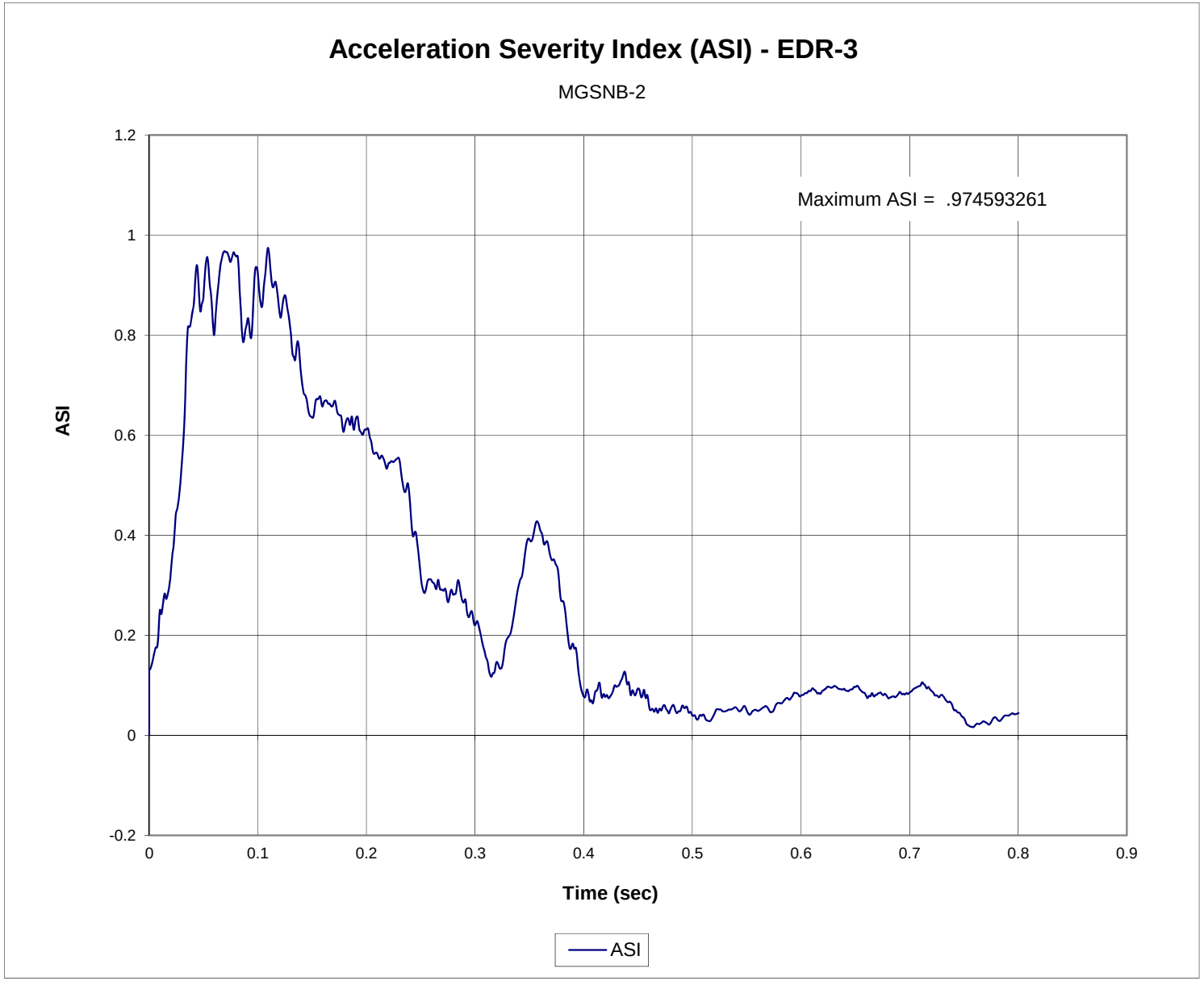

Figure F-23. Acceleration Severity Index (EDR-3), Test No. MGSNB-2

Appendix G. Summary of Test Results

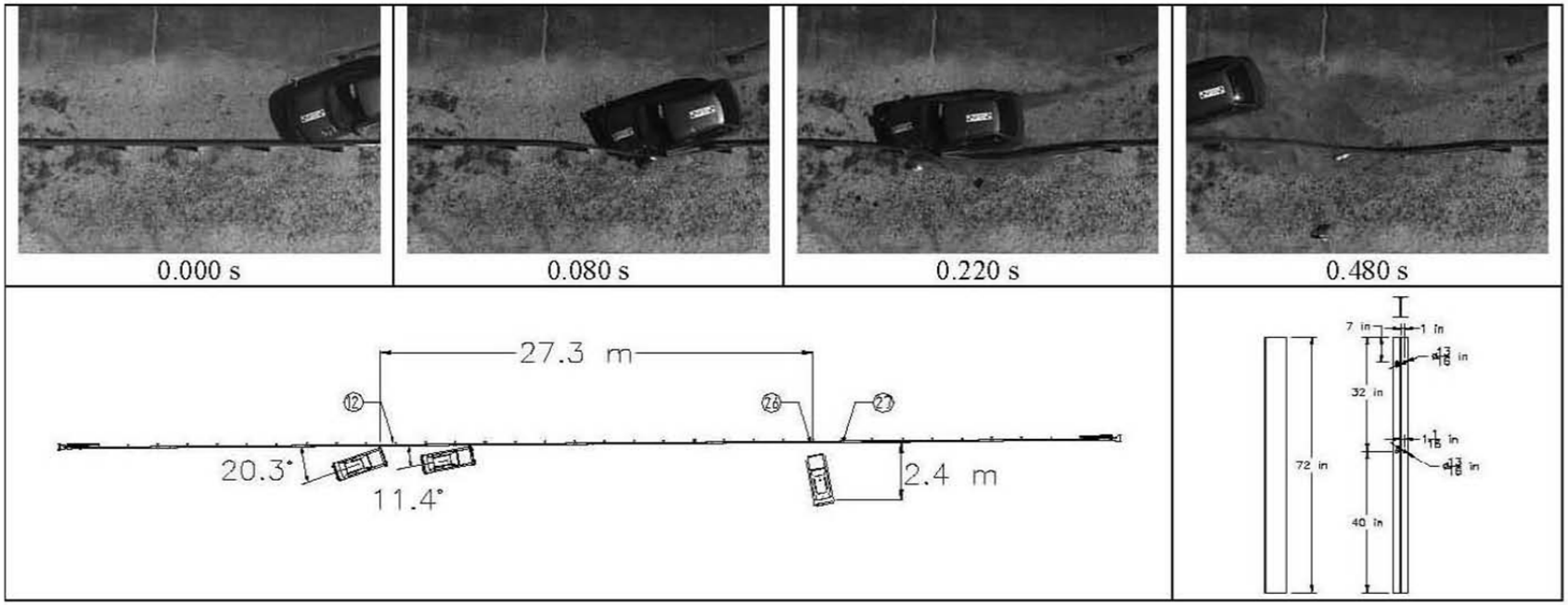

General Information	
Test Agency	Texas Transportation Institute
Test No.	220570-4
Date	10-19-2005
Test Article	
Type	Guardrail
Name	T-31
Installation Length (m)	68.6
Material or Key Elements	W-Beam Guardrail on Steel Yielding Line Posts with Splices at Mid-Span
Soil Type and Condition	Standard Soil, Dry
Test Vehicle	
Type	Production
Designation	820C
Model	1997 Geo Metro
Mass (kg)	
Curb	805
Test Inertial	825
Dummy	75
Gross Static	900

Impact Conditions	
Speed (km/h)	102.1
Angle (deg)	20.3
Exit Conditions	
Speed (km/h)	58.0
Angle (deg)	-11.4
Occupant Risk Values	
Impact Velocity (m/s)	
Longitudinal	6.4
Lateral	5.8
THIV (km/h)	29.8
Ridedown Accelerations (g's)	
Longitudinal	-12.9
Lateral	7.6
PHD (g's)	14.8
ASI	1.05
Max. 0.050-s Average (g's)	
Longitudinal	-10.2
Lateral	6.8
Vertical	2.4

Test Article Deflections (m)	
Dynamic	0.49
Permanent	0.31
Working Width	1.34
Vehicle Damage	
Exterior	
VDS	11LFQ5
CDC	11LFEW3
Max. Exterior Vehicle Crush (mm)	390
Interior	
OCDI	LF0013000
Max. Occupant Compartment Deformation (mm)	85
Post-Impact Behavior	
(during 1.0 sec after impact)	
Max. Yaw Angle (deg)	-35
Max. Pitch Angle (deg)	-3
Max. Roll Angle (deg)	-7

Figure G-1. Summary of Test Results and Sequential Photographs, Test No. 220570-4 (T-31), NCHRP 350 Test 3-10 [8]

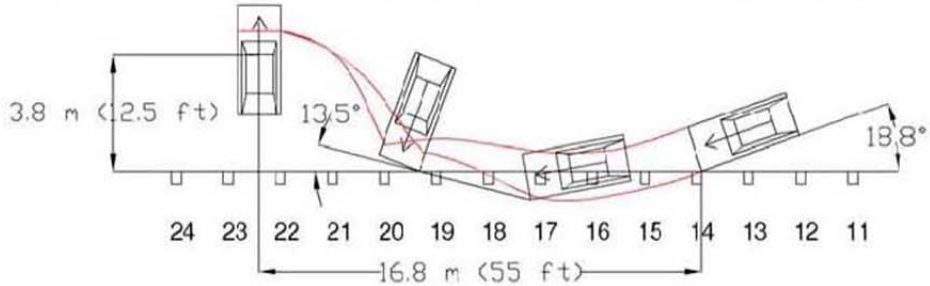

General Information
- Test Agency ..... Southwest Research Institute
- Test Number GMS-2
- Test Date 09/13/2006
- Test Category 3-10

Test Article
- Type ..... Longitudinal Barrier
- Installation Length ..... 57.15 m (187.5 ft)
- Nom. Barrier Height ..... 787 mm (31 in)
- Type of Primary Barrier .. Modified G4-1S Longitudinal Barrier

Soil Stable, Moist – "Standard" Soil

Test Vehicle
- Type ..... Small Car
- Designation 820C
- Model ..... 2001 Suzuki Swift
- Mass (kg) 820
- Inertial Mass (kg) 820
- Dummy Mass (kg) 73
- Gross Static Mass (kg) 893

Impact Conditions
- Speed (km/hr) 106.3
- Angle (degrees) 18.8

Exit Conditions
- Speed (km/hr) ..... 30 (calculated)
- Angle (degrees) 13.5

Occupant Risk Values
- Impact Velocity (m/s)
  - x-direction 7.6
  - y-direction ..... -4.8
- Ridedown Accelerations (g's)
  - x-direction ..... -8.1
  - y-direction 7.1

Post Impact Vehicular Behavior (limited to events <1.000 seconds)
- Maximum Roll Angle (degrees) ..... 7.8 @ 0.265 sec.
- Maximum Pitch Angle (degrees) ..... -5.2 @ 0.998 sec.
- Maximum Yaw Angle (degrees) ..... -97.1 @ 0.998 sec.

Test Article Deflection
- Dynamic ..... 0.66 m (2.2 ft)
- Permanent ..... 0.56 m (1.8 ft)

Vehicle Damage

Exterior
- CDC 11LFEW5
- VDS 11-LFQ-5

Interior
- OCDI LF0000000
- Max. Deform. (mm) 0

Figure G-2. Summary of Test Results and Sequential Photographs, Test No. GMS-2, NCHRP 350 Test 3-10 [9]

0.000 sec 0.067 sec 0.133 sec 0.167 sec 0.234 sec

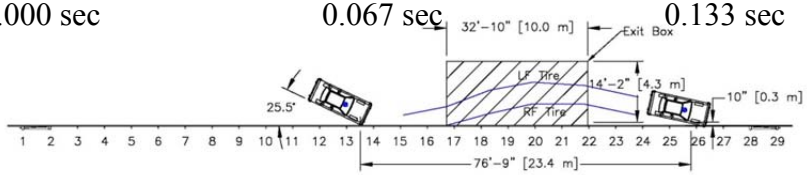

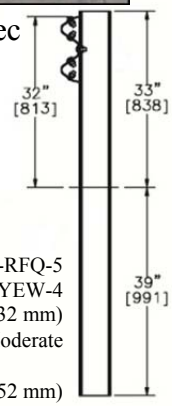

- Test Agency ..... MwRSF
- Test Number MGSNB-2
- Date 6/15/2011
- MASH Test Designation 3-10
- Test Article ..... Non-Blocked MGS
- Total Length ..... 181 ft - 3 in. (55.3 m)
- Key Component – Steel MGS
  - Thickness ..... 12 gauge (2.66 mm)
  - Top Mounting Height ..... 32 in. (813 mm)
- Key Component – Steel Posts
  - Post Type ..... W6x8.5 by 6' (W152x12.6 by 1,829 mm)
  - Post Spacing ..... 75 in. (1,905 mm)
- Key Component – Steel W-beam Backup Plates
  - Thickness ..... 12 gauge (2.66 mm)
  - Length ..... 12 in. (305 mm)
- Soil Type ..... Grading B - AASHTO M 147-65 (1990)
- Vehicle Make /Model ..... 2005 Kia Rio
  - Curb ..... 2,375 lb (1,077 kg)
  - Test Inertial ..... 2,408 lb (1,092 kg)
  - Gross Static ..... 2,578 lb (1,169 kg)
- Impact Conditions
  - Speed ..... 63.0 mph (101.4 km/h)
  - Angle ..... 25.5 deg
  - Impact Location ..... 8 ft - 11¼ in. (2.7 m) upstream of Post No. 15
- Exit Conditions
  - Speed ..... 25.7 mph (41.4 km/h)
  - Angle ..... 19.1 deg
- Exit Box Criterion ..... Pass
- Vehicle Stability ..... Satisfactory
- Vehicle Stopping Distance ..... 76 ft-9 in. (23.4 m) downstream
  10 in. (0.3 M) laterally in front
- Vehicle Damage
  - VDS[13] 01-RFQ-5
  - CDC[14] 01-RYEW-4
  - Maximum Interior Deformation ..... 1¼ in. (32 mm)
- Test Article Damage ..... Moderate
- Test Article Deflections
  - Permanent Set ..... 13 7/8 in. (352 mm)
  - Dynamic ..... 29.1 in. (740 mm)
  - Working Width ..... 34.5 in. (877 mm)
- Maximum Angular Displacements
  - Roll ..... 8.27° < 75°
  - Pitch ..... 3.98° < 75°
  - Yaw ..... 14.24°
- Impact Severity (IS) ..... 59.3 kip-ft (80.4 kJ) > 51 kip-ft (69.7 kJ)
- Transducer Data

Evaluation Criteria		Transducer		MASH Limit
		EDR-3	DTS	
OIV ft/s (m/s)	Longitudinal	-31.17 (-9.81)	-31.26 (-9.53)	≤ 40 (12.2)
	Lateral	-15.46 (-4.71)	-15.83 (-4.82)	≤ 40 (12.2)
ORA g's	Longitudinal	-10.47	-10.20	≤ 20.49
	Lateral	-6.03	-6.30	≤ 20.49
THIV – ft/s (m/s)		NA	34.65 (10.56)	not required
PHD – g's		NA	10.21	not required
ASI		0.97	1.04	not required

Figure G-3. Summary of Test Results and Sequential Photographs, Test No. MGSNB-2, MASH Test 3-10

0.000 sec | 0.088 sec | 0.147 sec | 0.189 sec | 0.251 sec

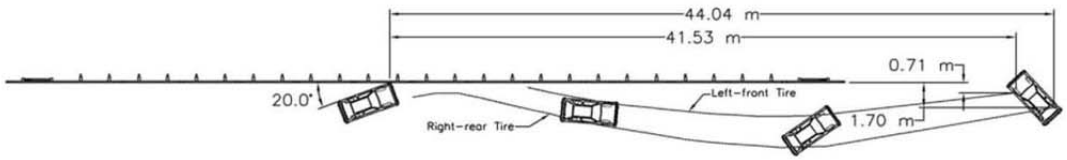

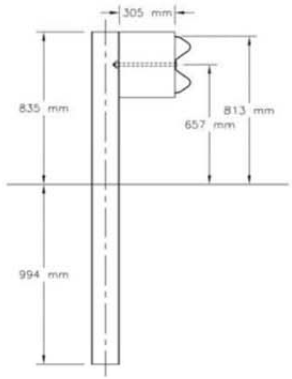

- Test Number NPG-1
- Date 6/29/01
- Appurtenance . . . . . *Midwest Guardrail System*
  - Key Elements . . . . . increased mounting height, blockout depth, and bolt slot length, mid-span splices
- Total Length . . . . . 55.25 m
- Steel W-beam
  - Thickness . . . . . 2.66 mm
  - Top Mounting Height . . . . . 813 mm
  - Bolt Slot Length . . . . . 102 mm
- Steel Posts
  - Post Nos. 3 - 27 . . . . . W152 x 13.4 by 1,829-mm long
  - Spacing . . . . . 1,905 mm
- Wood Posts
  - Post Nos. 1 - 2, 28 - 29 (BCT) . 140 mm x 190 mm by 1,080-mm long
- Wood Spacer Blocks
  - Post Nos. 3 - 27 . . . . . 152 mm x 305 mm by 356-mm long
- Soil Type . . . . . Grading B - AASHTO M 147-65 (1990)
- Vehicle Model . . . . . 1994 Geo Metro
  - Curb . . . . . 746 kg
  - Test Inertial . . . . . 812 kg
  - Gross Static . . . . . 887 kg
- Vehicle Speed
  - Impact . . . . . 102.9 km/h
  - Exit (resultant) . . . . . 92.3 km/h
- Vehicle Angle
  - Impact (trajectory) . . . . . 20.0 deg
  - Exit (trajectory) . . . . . 9 deg
- Vehicle Stability . . . . . Satisfactory
- Occupant Ridedown Deceleration (10 msec avg.)
  - Longitudinal . . . . . 6.13 g's < 20 g's
  - Lateral (not required) . . . . . 7.97 g's
- Occupant Impact Velocity
  - Longitudinal . . . . . 3.52 m/s < 12 m/s
  - Lateral (not required) . . . . . 5.68 m/s
- Vehicle Damage . . . . . Moderate
  - TAD[31] 11-LFQ-3
  - SAE[32] 11LFEW3
- Vehicle Stopping Distance . . . . . 41.53 m downstream
  0.71 m traffic-side face
- Barrier Damage . . . . . Moderate
- Maximum Rail Deflections
  - Permanent Set . . . . . 238 mm
  - Dynamic . . . . . 443 mm
- Working Width . . . . . 1,023 mm

Figure G-4. Summary of Test Results and Sequential Photographs, Test No. NPG-1, NCHRP 350 Test 3-10 [3]

0.000 sec | 0.166 sec | 0.236 sec | 0.404 sec | 0.574 sec

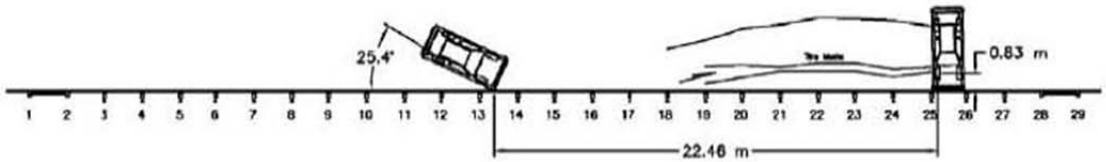

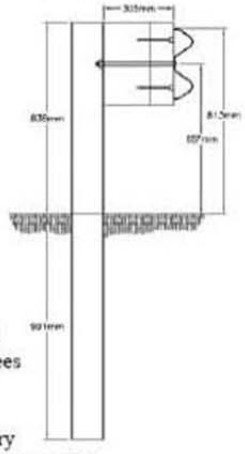

- Test Agency ..... MwRSF
- Test Number 2214MG-3
- Date 11/8/04
- NCHRP 350 Update Test Designation .. 3-10
- Appurtenance ..... Midwest Guardrail System
- Total Length ..... 55.25 m
- Key Elements - Steel W-Beam
  - Thickness ..... 2.66 mm
  - Top Mounting Height ..... 813 mm
- Key Elements - Steel Posts
  - Post Nos. 3 - 27 ..... W152x13.4 by 1,829 mm long
  - Spacing ..... 1,905 mm
- Key Elements - Wood Posts
  - Post Nos. 1 - 2, 28 - 29 (BCT) .... 140 mm x 190 mm by 1,080 mm long
- Key Elements - Steel Foundation Tube . 1,829-mm long
- Key Elements - Wood Spacer Blocks
  - Post Nos. 3 - 27 ..... 152 mm x 305 mm by 362 mm long
- Type of Soil ..... Grading B - AASHTO M 147-65 (1990)
- Test Vehicle
  - Type/Designation 1100C
  - Make and Model ..... 2002 Kia Rio
  - Curb ..... 1,026 kg
  - Test Inertial ..... 1,099 kg
  - Gross Static ..... 1,174 kg
- Impact Conditions
  - Speed ..... 97.8 km/h
  - Angle ..... 25.4 degrees
  - Impact Location ..... 2.11 m upstream splice between posts 14 & 15
- Exit Conditions
  - Speed ..... 48.4 km/h
  - Angle ..... 14.1 degrees
  - Exit Box Criterion ..... Pass
- Post-Impact Trajectory
  - Vehicle Stability ..... Satisfactory
  - Stopping Distance ..... 22.46 m downstream
    0.83 m traffic-side face
- Occupant Impact Velocity (350 Update)
  - Longitudinal ..... 4.52 m/s < 12 m/s
  - Lateral ..... 5.22 m/s < 12 m/s
- Occupant Ridedown Deceleration (350 Update)
  - Longitudinal ..... 16.14 Gs < 20 Gs
  - Lateral ..... 8.37 Gs < 20 Gs
- THIV (not required) ..... 7.26 m/s
- PHD (not required) ..... 16.20 Gs
- Test Article Damage ..... Moderate
- Test Article Deflections
  - Permanent Set ..... 505 mm
  - Dynamic ..... 913 mm
  - Working Width ..... 1,227 mm
- Vehicle Damage ..... Moderate
  - VDS[4] 1-RFQ-6
  - CDC[5] 1-RYEW6
  - Maximum Deformation ..... 6 mm at right-front floorpan

Figure G-5. Summary of Test Results and Sequential Photographs, Test No. 2214MG-3, MASH Test 3-10 [3]

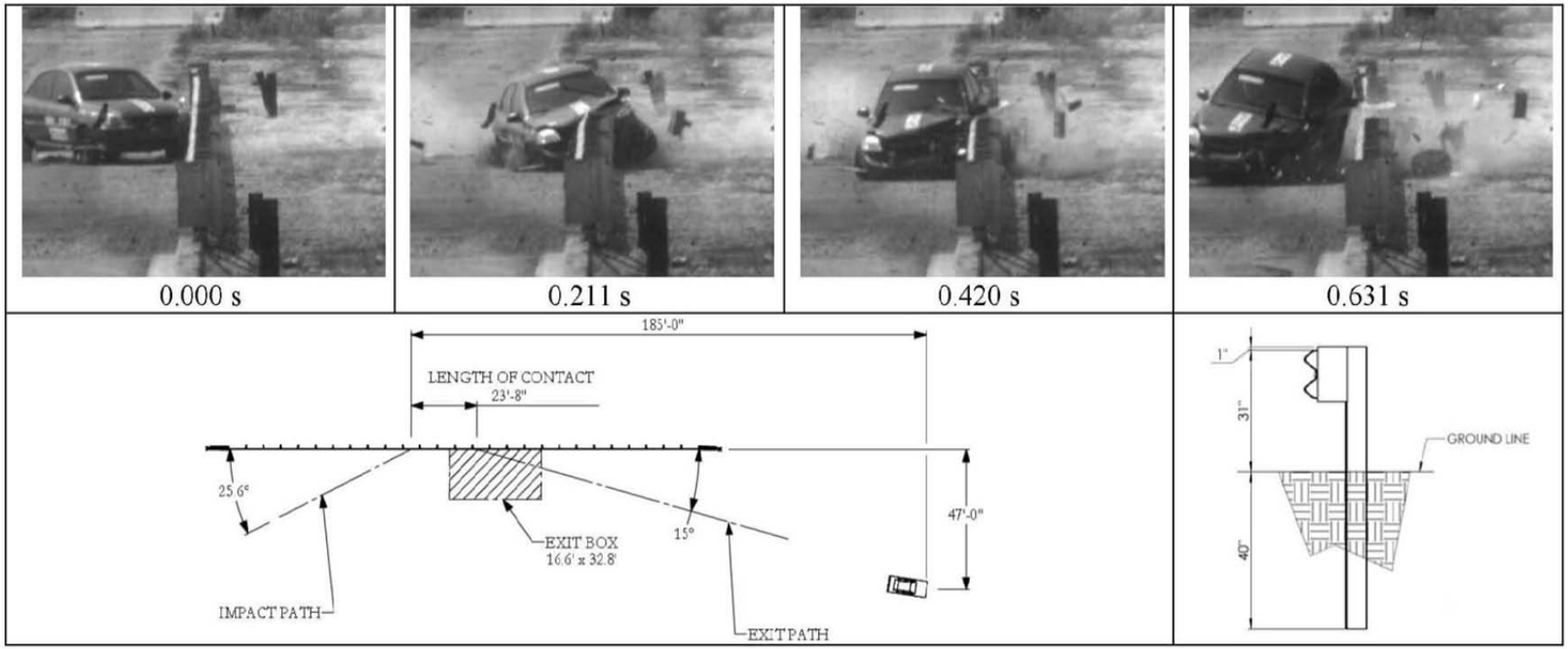

General Information
- Test Agency ..... Texas Transportation Institute (TTI)
- Test Standard Test No. ..... MASH Test 3-10
- TTI Test No. 420020-5
- Date 2010-08-26

Test Article
- Type ..... Guardrail
- Name ..... 31-inch W-Beam Guardrail with standard offset blocks
- Installation Length ..... 181.25 ft
- Material or Key Elements .... 12-ga. W-beam rail, 8-inch deep routed wood blockouts

Soil Type and Condition ..... Crushed Limestone, Dry

Test Vehicle
- Type/Designation 1100C
- Make and Model ..... 2003 Kia Rio
- Curb ..... 2387 lb
- Test Inertial ..... 2435 lb
- Dummy ..... 174 lb
- Gross Static ..... 2609 lb

Impact Conditions
- Speed ..... 60.4 mi/h
- Angle ..... 25.6 degrees
- Location/Orientation ..... 38 inches upstrm

Exit Conditions Post 13
- Speed ..... 29.2 mi/h
- Angle ..... 15.0 degrees

Occupant Risk Values
- Impact Velocity
  - Longitudinal ..... 21.0 ft/s
  - Lateral ..... 17.4 ft/s
- Ridedown Accelerations
  - Longitudinal ..... 8.8 G
  - Lateral ..... 6.8 G
- THIV ..... 29.2 km/h
- PHD ..... 10.1 G
- ASI 0.82
- Max. 0.050-s Average
  - Longitudinal ..... -6.8 G
  - Lateral ..... 5.6 G
  - Vertical ..... -1.8 G

Post-Impact Trajectory
- Stopping Distance ..... 185 ft dwnstrm
  47 ft twd traffic

Vehicle Stability
- Maximum Yaw Angle ..... 49 degrees
- Maximum Pitch Angle ..... -11 degrees
- Maximum Roll Angle ..... -16 degrees
- Vehicle Snagging ..... No
- Vehicle Pocketing ..... No

Test Article Deflections
- Dynamic ..... 2.38 ft
- Permanent ..... 1.58 ft
- Working Width ..... 2.38 ft

Vehicle Damage
- VDS 11LFQ4
- CDC 11LDEW3
- Max. Exterior Deformation ..... 12.5 inches
- OCDI LF0000000
- Max. Occupant Compartment Deformation 0

Impact Severity ..... 1778 kip-ft (-0.4%)

Figure G-6. Summary of Test Results and Sequential Photographs, Test No. 420020-5, MASH Test 3-10 [15]

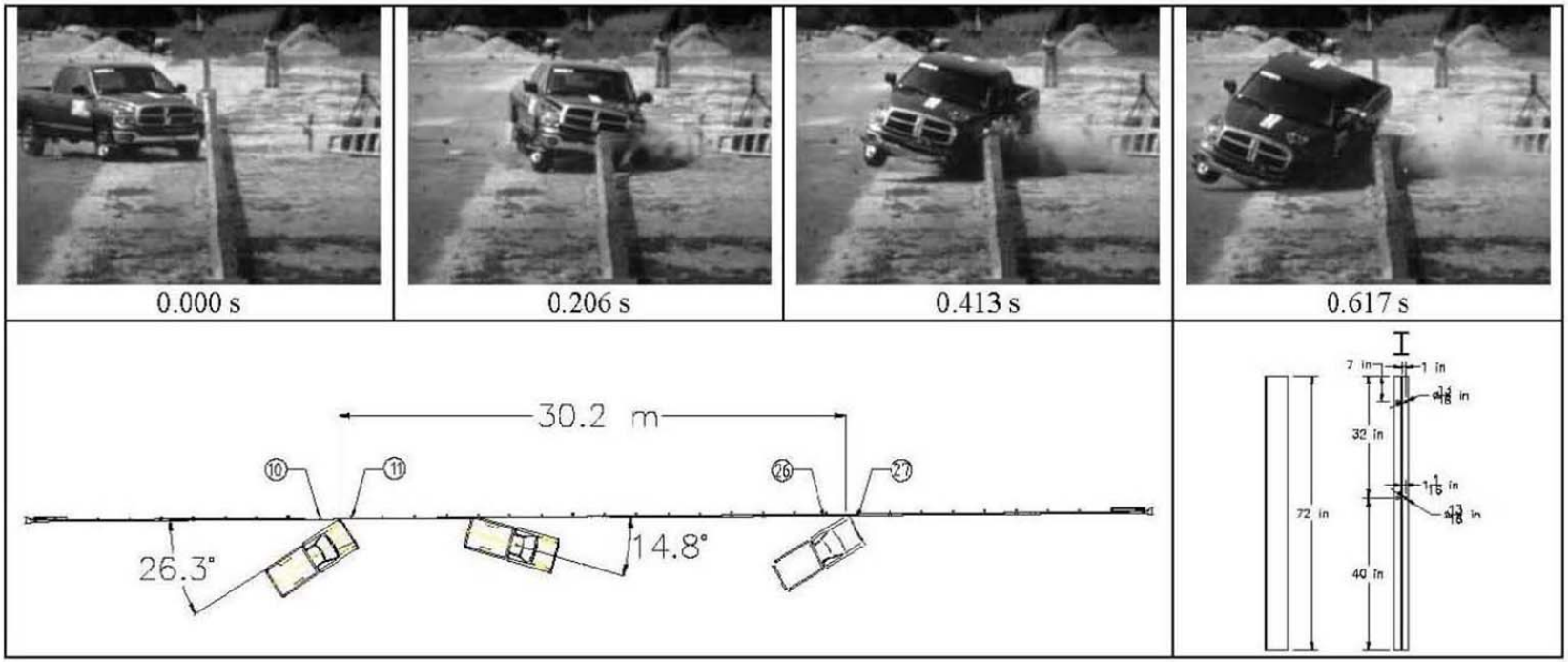

General Information	
Test Agency	Texas Transportation Institute
Test No.	220570-2
Date	08-02-2005
Test Article	
Type	Guardrail
Name	T-31
Installation Length (m)	68.58
Material or Key Elements	W-Beam Guardrail on Steel Yielding Line Posts with Splices at Mid-Span
Soil Type and Condition	Standard Soil Dry
Test Vehicle	
Type	Production
Designation	2270P
Model	2002 Dodge Ram 1500
Mass (kg)	
Curb	2207
Test Inertial	2299
Dummy	No dummy
Gross Static	2299

Impact Conditions	
Speed (km/h)	97.6
Angle (deg)	26.8
Exit Conditions	
Speed (km/h)	63.8
Angle (deg)	14.8
Occupant Risk Values	
Impact Velocity (m/s)	
Longitudinal	5.0
Lateral	5.1
THIV (km/h)	23.9
Ridedown Accelerations (g's)	
Longitudinal	-6.1
Lateral	7.4
PHD (g's)	7.5
ASI	0.70
Max. 0.050-s Average (g's)	
Longitudinal	-5.0
Lateral	5.5
Vertical	1.8

Test Article Deflections (m)	
Dynamic	1.04
Permanent	0.73
Working Width	1.12
Vehicle Damage	
Exterior	
VDS	11LFQ5
CDC	11LFEW4
Max. Exterior Vehicle Crush (mm)	410
Interior	
OCDI	FS0000000
Max. Occupant Compartment Deformation (mm)	0
Post-Impact Behavior	
(during 1.0 sec after impact)	
Max. Yaw Angle (deg)	42
Max. Pitch Angle (deg)	-14
Max. Roll Angle (deg)	-22

Figure G-7. Summary of Test Results and Sequential Photographs, Test No. 220570-2 (T-31), MASH Test 3-11 [8]

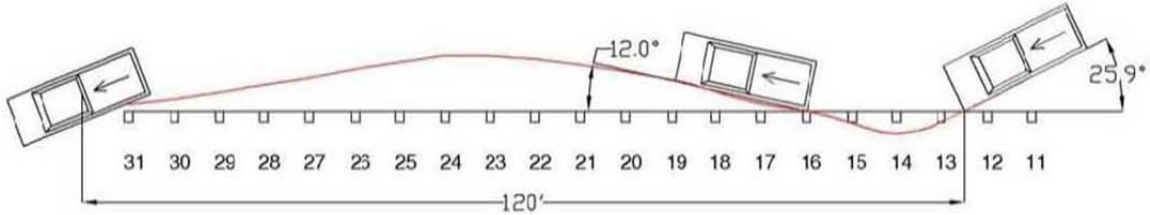

General Information
- Test Agency ..... Southwest Research Institute
- Test Number GMS-1
- Test Date 08/17/2006
- Test Category 3-11

Test Article
- Type ..... Longitudinal Barrier
- Installation Length ..... 57.15 m (187.5 ft)
- Nom. Barrier Height ..... 787 mm (31 in)
- Type of Primary Barrier .. Modified G4-1S Longitudinal Barrier

Soil Stable, Dry – "Standard" Soil

Test Vehicle
- Type ..... ½ Ton Quad Cab Pickup
- Designation 2270P
- Model ..... 2002 Dodge Ram 1500 Quad Cab
- Mass (kg) 2197
- Inertial Mass (kg) 2197
- Dummy Mass (kg) ..... NA
- Gross Static Mass (kg) 2197

Impact Conditions
- Speed (km/hr) 97.7
- Angle (degrees) 25.9

Exit Conditions
- Speed (km/hr) ..... 65 (calculated)
- Angle (degrees) 12.0

Occupant Risk Values
- Impact Velocity (m/s)
  - x-direction 5.0
  - y-direction ..... -3.2
- Ridedown Accelerations (g's)
  - x-direction ..... -10.7
  - y-direction 11.5

Post Impact Vehicular Behavior (limited to events <1.000 seconds)
- Maximum Roll Angle (degrees) ..... -12.3 @ 0.506 sec.
- Maximum Pitch Angle (degrees) ..... -6.2 @ 0.674 sec.
- Maximum Yaw Angle (degrees) ..... 35.9 @ 0.542 sec.

Test Article Deflection
- Dynamic ..... 0.89 m (2.92 ft)
- Permanent ..... 0.56 m (1.8 ft)

Vehicle Damage

Exterior
- CDC 11LFEW5
- VDS 11-LFQ-3

Interior
- OCDI LF0000000
- Max. Deform. (mm) 0

Figure G-8. Summary of Test Results and Sequential Photographs, Test No. GMS-1, MASH Test 3-11 [9]

0.000 sec | 0.060 sec | 0.120 sec | 0.180 sec | 0.240 sec

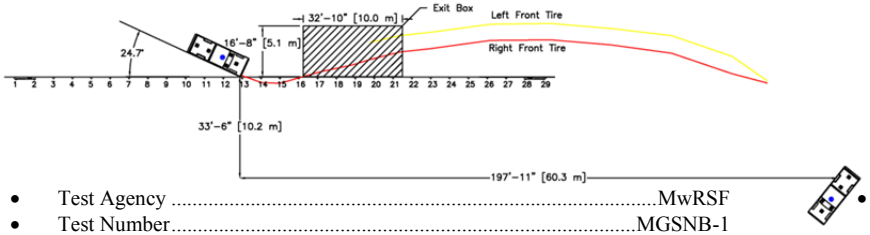

- Test Agency ..... MwRSF
- Test Number MGSNB-1
- Date 5/17/2011
- MASH Test Designation 3-11
- Test Article ..... Non-Blocked MGS
- Total Length ..... 181 ft - 3 in. (55.3 m)
- Key Component – Steel MGS Rail
  - Thickness ..... 12 gauge (2.66 mm)
  - Top Mounting Height ..... 31 in. (787 mm)
- Key Component – Steel Posts
  - Post Type ..... W6x8.5 by 6' (W152x12.6 by 1,829 mm)
  - Post Spacing ..... 75 in. (1,905 mm)
- Key Component – Steel W-beam Backup Plates
  - Thickness ..... 12 gauge (2.66 mm)
  - Length ..... 12 in. (305 mm)
- Soil Type ..... Grading B - AASHTO M 147-65 (1990)
- Vehicle Make /Model ..... 2004 Dodge Ram 1500 Quad Cab
  - Curb ..... 4,955 lb (2,248 kg)
  - Test Inertial ..... 5,011 lb (2,273 kg)
  - Gross Static ..... 5,181 lb (2,350 kg)
- Impact Conditions
  - Speed ..... 62.7 mph (100.9 km/h)
  - Angle ..... 24.7 deg
  - Impact Location ..... 14 ft - 3 in. (4.3 m) upstream of Post No. 15
- Exit Conditions
  - Speed ..... 47.4 mph (76.3 km/h)
  - Angle ..... 14.4 deg
- Exit Box Criterion ..... Pass
- Vehicle Stability ..... Satisfactory
- Vehicle Stopping Distance ..... 197 ft – 11 in. (60.3 m) downstream
  ..... 33 ft – 6 in. (10.2 m) laterally behind

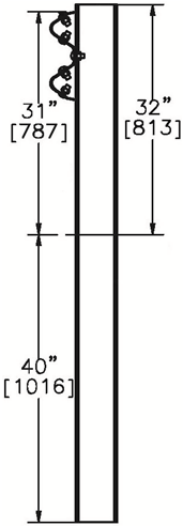

- Vehicle Damage ..... Moderate
  - VDS[13] 01-RFQ-4
  - CDC[14] 01-RYEW-3
  - Maximum Interior Deformation ..... 1¼ in. (32 mm)
- Test Article Damage ..... Moderate
- Test Article Deflections
  - Permanent Set ..... 19 3/8 in. (492 mm)
  - Dynamic ..... 34.1 in. (867 mm)
  - Working Width ..... 43.2 in. (1,097 mm)
- Maximum Angular Displacements
  - Roll ..... 15.7 ° < 75°
  - Pitch ..... 5.3° < 75°
  - Yaw ..... 50.6°
- Impact Severity (IS) ..... 115.1 kip-ft (156.1 kJ) > 106 kip-ft (144 kJ)
- Transducer Data

Evaluation Criteria		Transducer		MASH Limit
		EDR-3	DTS	
OIV ft/s (m/s)	Longitudinal	-19.40 (-5.91)	-17.13 (-5.22)	≤ 40 (12.2)
	Lateral	-17.22 (-5.25)	-18.67 (-5.69)	≤ 40 (12.2)
ORA g's	Longitudinal	-11.20	-11.49	≤ 20.49
	Lateral	-8.51	-12.91	≤ 20.49
THIV – ft/s (m/s)		NA	24.09 (7.34)	not required
PHD – g's		NA	14.0	not required
ASI		0.86	0.90	not required

Figure G-9. Summary of Test Results and Sequential Photographs, Test No. MGSNB-1, MASH Test 3-10

0.000 sec | 0.101 sec | 0.190 sec | 0.323 sec | 0.446 sec

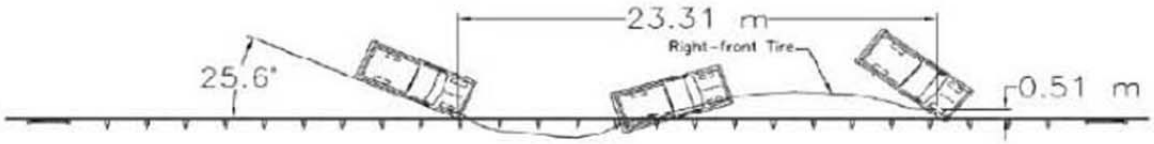

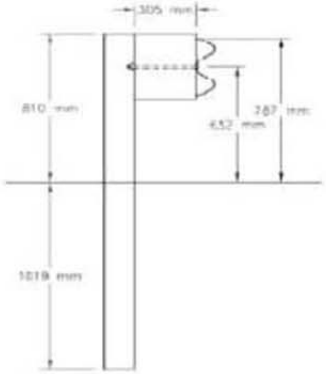

- Test Number NPG-4
- Date 6/14/02
- Appurtenance ..... *Midwest Guardrail System*
  - Key Elements ..... increased mounting height, blockout depth, and foundation tube length, mid-span splices
- Total Length ..... 55.25 m
- Steel W-beam
  - Thickness ..... 2.66 mm
  - Top Mounting Height ..... 787 mm
  - Bolt Slot Length ..... 64 mm
- Steel Posts
  - Post Nos. 3 - 27 ..... W152 x 13.4 by 1,829-mm long
  - Spacing 1,905 mm
- Wood Posts
  - Post Nos. 1 - 2, 28 - 29 (BCT) . 140 mm x 190 mm by 1,080-mm long
- Steel Foundation Tube Length ..... 1,829 mm
- Wood Spacer Blocks
  - Post Nos. 3 - 27 ..... 152 mm x 305 mm by 356-mm long
- Soil Type ..... Grading B - AASHTO M 147-65 (1990)
- Vehicle Model ..... 1995 GMC 2500 ¾-ton pickup
  - Curb ..... 1,913 kg
  - Test Inertial ..... 1,986 kg
  - Gross Static ..... 1,986 kg
- Vehicle Speed
  - Impact ..... 98.1 km/h
  - Exit (resultant) 55.1 km/h
- Vehicle Angle
  - Impact (trajectory) ..... 25.6 deg
  - Exit (trajectory) ..... 19.3 deg
- Vehicle Stability ..... Satisfactory
- Occupant Ridedown Deceleration (10 msec avg.)
  - Longitudinal ..... 9.50 g's < 20 g's
  - Lateral (not required) ..... 6.94 g's
- Occupant Impact Velocity
  - Longitudinal ..... 5.58 m/s < 12 m/s
  - Lateral (not required) ..... 3.89 m/s
- Vehicle Damage ..... Minimal
  - TAD[31] 1-RFQ-4
  - SAE[32] 01RFEW5
- Vehicle Stopping Distance ..... 23.31 m downstream
  0.51 m traffic-side face
- Barrier Damage ..... Moderate
- Maximum Deflections
  - Permanent Set ..... 652 mm
  - Dynamic ..... 1,094 mm
- Working Width ..... 1,260 mm

Figure G-10. Summary of Test Results and Sequential Photographs, Test No. NPG-4, NCHRP 350 Test 3-11 [1]

0.000 sec 0.140 sec 0.264 sec 0.342 sec 0.458 sec

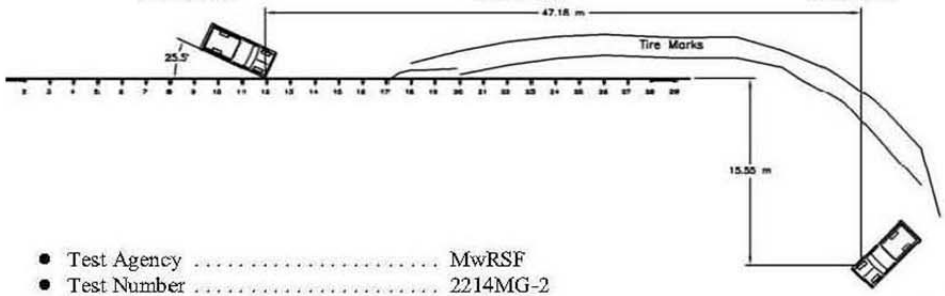

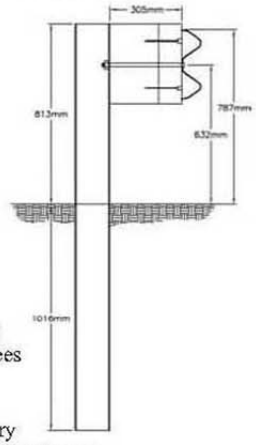

- Test Agency ..... MwRSF
- Test Number 2214MG-2
- Date 10/6/04
- NCHRP 350 Update Test Designation .. 3-11
- Appurtenance ..... Midwest Guardrail System
- Total Length ..... 55.25 m
- Key Elements - Steel W-Beam
  - Thickness ..... 2.66 mm
  - Top Mounting Height ..... 787 mm
- Key Elements - Steel Posts
  - Post Nos. 3 - 27 ..... W152x13.4 by 1,829 mm long
  - Spacing ..... 1,905 mm
- Key Elements - Wood Posts
  - Post Nos. 1 - 2, 28 - 29 (BCT) .... 140 mm x 190 mm by 1,080 mm long
- Key Elements - Steel Foundation Tube . 1,829 mm long
- Key Elements - Wood Spacer Blocks
  - Post Nos. 3 - 27 ..... 152 mm x 305 mm by 362 mm long
- Type of Soil ..... Grading B - AASHTO M 147-65 (1990)
- Test Vehicle
  - Type/Designation 2270P
  - Make and Model ..... 2002 Dodge Ram 1500 Quad Cab Pickup
  - Curb ..... 2,292 kg
  - Test Inertial ..... 2,268 kg
  - Gross Static ..... 2,268 kg
- Impact Conditions
  - Speed ..... 101.1 km/h
  - Angle ..... 25.5 degrees
  - Impact Location ..... 5.25 m upstream splice between posts 14 & 15
- Exit Conditions
  - Speed ..... 63.7 km/h
  - Angle ..... 13.5 degrees
  - Exit Box Criterion ..... Pass
- Post-Impact Trajectory
  - Vehicle Stability ..... Satisfactory
  - Stopping Distance ..... 47.18 m downstream
    15.56 m laterally behind
- Occupant Impact Velocity (350 Update)
  - Longitudinal ..... 4.67 m/s < 12 m/s
  - Lateral ..... 4.76 m/s < 12 m/s
- Occupant Ridedown Deceleration (350 Update)
  - Longitudinal ..... 8.23 Gs < 20 Gs
  - Lateral ..... 6.93 Gs < 20 Gs
- THIV (not required) ..... 6.91 m/s
- PHD (not required) ..... 10.76 Gs
- Test Article Damage ..... Moderate
- Test Article Deflections
  - Permanent Set ..... 803 mm
  - Dynamic ..... 1,114 mm
  - Working Width ..... 1,234 mm
- Vehicle Damage ..... Moderate
  - VDS[5] 1-RFQ-4
  - CDC[6] 1-RYEN2
  - Maximum Deformation ..... 19 mm at right-center floorpan

Figure G-11. Summary of Test Results and Sequential Photographs, Test No. 2214MG-2, MASH Test 3-11 [2]

END OF DOCUMENT