TESTING CERT # 2937.01

# EVALUATION OF THE MIDWEST GUARDRAIL SYSTEM (MGS) WITH WHITE PINE WOOD POSTS

Submitted by


Cale J. Stolle
Undergraduate Research Assistant

Karla A. Lechtenberg, M.S.M.E., E.I.T.
Research Associate Engineer

Ronald K. Faller, Ph.D., P.E.
Research Assistant Professor

Scott K. Rosenbaugh, M.S.C.E., E.I.T.
Research Associate Engineer

Dean L. Sicking, Ph.D., P.E.
Professor and MwRSF Director

John D. Reid, Ph.D.
Professor

**MIDWEST ROADSIDE SAFETY FACILITY**
Nebraska Transportation Center
University of Nebraska-Lincoln
130 Whittier Research Center
2200 Vine Street
Lincoln, Nebraska 68583-0853
(402) 472-0965


Submitted to

**WISCONSIN DEPARTMENT OF TRANSPORTATION**
4802 Sheboygan Avenue
Madison, Wisconsin 53707


MwRSF Research Report No. TRP-03-241-11

March 28, 2011

# TECHNICAL REPORT DOCUMENTATION PAGE

| | | | |
|---|---|---|---|
| 1. Report No.<br>TRP-03-241-11 | 2. | 3. Recipient's Accession No. | |
| 4. Title and Subtitle<br>Evaluation of the Midwest Guardrail System (MGS) with White Pine Wood Posts | | 5. Report Date<br>March 28, 2011<br>6. | |
| 7. Author(s)<br>Stolle, C.J., Lechtenberg, K.A., Faller, R.K., Rosenbaugh, S.K., Sicking, D.L., and Reid, J.D. | | 8. Performing Organization Report No.<br>TRP-03-241-11 | |
| 9. Performing Organization Name and Address<br>Midwest Roadside Safety Facility (MwRSF)<br>Nebraska Transportation Center<br>University of Nebraska-Lincoln<br>130 Whittier Research Center<br>2200 Vine Street<br>Lincoln, Nebraska 68583-0853 | | 10. Project/Task/Work Unit No.<br>11. Contract © or Grant (G) No. | |
| 12. Sponsoring Organization Name and Address<br>Wisconsin Department of Transportation<br>4802 Sheboygan Avenue<br>Madison, Wisconsin 53707 | | 13. Type of Report and Period Covered<br>Final Report: 2009-2011<br>14. Sponsoring Agency Code<br>TPF-5(193) Supplement #12 | |
| 15. Supplementary Notes<br>Prepared in cooperation with U.S. Department of Transportation, Federal Highway Administration. | | | |


16. Abstract (Limit: 200 words)

Wood-post guardrail systems have performed acceptably when redirecting errant vehicles, utilizing 6-in. x 8-in. (152-mm x 203-mm) southern yellow pine (SYP) posts. SYP wood posts have been used due to their relatively low cost. State departments of transportation have expressed a desire to use various species of wood in their wood post guardrail systems, including white pine and red pine. White and red pine posts have lower strength than the SYP post typically used in guardrail design. This would generally be cause for concern as wood posts are designed to have sufficient capacity to rotate in the soil and absorb energy without fracturing. The recently developed Midwest Guardrail System (MGS) imparts lower forces on its posts than traditional W-beam guardrail systems, thus there is a potential for lower-strength, wood guardrail posts to be used. The white pine wood post, with the same cross-sectional dimensions as standard southern pine wood posts, was chosen to be evaluated in the MGS system.

The white pine wood post MGS system was evaluated according to the Test Level 3 (TL-3) criteria set forth in the *Manual for Assessing Safety Hardware* (MASH). The research study included one full-scale vehicle crash test with a Dodge Ram Quad Cab pickup truck, weighing approximately 5,000 lb (2,268 kg). Following the successful redirection of the pickup truck, the safety performance of the white pine wood post MGS system was determined to be acceptable according to the TL-3 evaluation criteria specified in MASH.


| | | | |
|---|---|---|---|
| 17. Document Analysis/Descriptors<br>Highway Safety, Crash Test, Roadside Appurtenances, Compliance Test, MASH, MGS, White Pine Wood, Longitudinal Barrier | | 18. Availability Statement<br>No restrictions. Document available from: National Technical Information Services, Springfield, Virginia 22161 | |
| 19. Security Class (this report)<br>Unclassified | 20. Security Class (this page)<br>Unclassified | 21. No. of Pages<br>150 | 22. Price |

## DISCLAIMER STATEMENT

This report was conducted in part through funding from the Federal Highway Administration, U.S. Department of Transportation. The contents of this report reflect the views and opinions of the authors who are responsible for the facts and the accuracy of the data presented herein. The contents do not necessarily reflect the official views or policies of the Wisconsin Department of Transportation nor the Federal Highway Administration, U.S. Department of Transportation. This report does not constitute a standard, specification, regulation, product endorsement, or an endorsement of manufacturers.

## UNCERTAINTY OF MEASUREMENT STATEMENT

The Midwest Roadside Safety Facility (MwRSF) has determined the uncertainty of measurements for several parameters involved in standard full-scale crash testing and non-standard testing of roadside safety features. Information regarding the uncertainty of measurements for critical parameters is available upon request by the sponsor and the Federal Highway Administration.

The Independent Approving Authority (IAA) for the data contained herein was Mr. Robert Bielenberg, Research Associate Engineer.

## ACKNOWLEDGEMENTS

The authors wish to acknowledge several sources that made a contribution to this project: (1) the Wisconsin Department of Transportation for sponsoring this project; and (2) MwRSF personnel for constructing the barrier and conducting the crash test.

Acknowledgement is also given to the following individuals who made a contribution to the completion of this research project.

**Midwest Roadside Safety Facility**

J.C. Holloway, M.S.C.E., E.I.T., Test Site Manager
R.W. Bielenberg, M.S.M.E., E.I.T., Research Associate Engineer
C.L. Meyer, B.S.M.E., E.I.T., Research Associate Engineer
A.T. Russell, B.S.B.A., Shop Manager
K.L. Krenk, B.S.M.A, Maintenance Mechanic
A.T. McMaster, Laboratory Mechanic
Undergraduate and Graduate Research Assistants

**Wisconsin Department of Transportation**

Jerry Zogg, P.E., Chief Roadway Standards Engineer
John Bridwell, P.E., Standards Development Engineer
Erik Emerson, P.E., Standards Development Engineer

# TABLE OF CONTENTS

TECHNICAL REPORT DOCUMENTATION PAGE ..... i

DISCLAIMER STATEMENT ..... ii

UNCERTAINTY OF MEASUREMENT STATEMENT ..... ii

ACKNOWLEDGEMENTS ..... iii

TABLE OF CONTENTS ..... iv

LIST OF FIGURES ..... vi

LIST OF TABLES ..... ix

1 INTRODUCTION ..... 1
- 1.1 Background ..... 1
- 1.2 Objective ..... 2
- 1.3 Scope ..... 3

2 DESIGN DETAILS ..... 4

3 TEST REQUIREMENTS AND EVALUATION CRITERIA ..... 20
- 3.1 Test Requirements ..... 20
- 3.2 Evaluation Criteria ..... 21
- 3.3 Soil Strength Requirements ..... 22

4 TEST CONDITIONS ..... 24
- 4.1 Test Facility ..... 24
- 4.2 Vehicle Tow and Guidance System ..... 24
- 4.3 Test Vehicle ..... 24
- 4.4 Simulated Occupant ..... 27
- 4.5 Data Acquisition Systems ..... 29
  - 4.5.1 Accelerometers ..... 29
  - 4.5.2 Rate Transducers ..... 30
  - 4.5.3 Pressure Tape Switches ..... 30
  - 4.5.4 Digital Cameras ..... 30

5 FULL SCALE CRASH TEST NO. MGSWP-1 ..... 33
- 5.1 Static Soil Test ..... 33
- 5.2 Test No. MGSWP-1 ..... 33
- 5.3 Weather Conditions ..... 33
- 5.4 Test Description ..... 34
- 5.5 Barrier Damage ..... 35
- 5.6 Vehicle Damage ..... 37
- 5.7 Occupant Risk ..... 38
- 5.1 Discussion ..... 39

6 SUMMARY, CONCLUSIONS, AND RECOMMENDATIONS ..... 63

7 REFERENCES ..... 69

8 APPENDICES ..... 72
Appendix A. Material Specifications ..... 73
Appendix B. Vehicle Center of Gravity Determination ..... 112
Appendix C. Static Soil Tests ..... 114
Appendix D. Vehicle Deformation Records ..... 117
Appendix E. Accelerometer and Rate Transducer Data Plots, Test No. MGSWP-1 ... 124
Appendix F. White Pine Post MGS on 2:1 Slope ..... 146
Appendix G. Equivalent White Pine CRT Post Calculations ..... 148

# LIST OF FIGURES

Figure 1. Test Installation Layout, Test No. MGSWP-1 ....6
Figure 2. Post and Splice Details, Test No. MGSWP-1 ....7
Figure 3. End Rail Details, Test No. MGSWP-1 ....8
Figure 4. Anchor Details, Test No. MGSWP-1 ....9
Figure 5. Line Post and Blockout Details, Test No. MGSWP-1 ....10
Figure 6. BCT Timber Post and Foundation Tube Details, Test No. MGSWP-1 ....11
Figure 7. BCT Anchor Cable Details, Test No. MGSWP-1 ....12
Figure 8. Ground Strut and Anchor Bracket Details, Test No. MGSWP-1 ....13
Figure 9. Rail Section Details, Test No. MGSWP-1 ....14
Figure 10. Bill of Materials, Test No. MGSWP-1 ....15
Figure 11. Wisconsin WP Wood Post Specifications, Test No. MGSWP-1 ....16
Figure 12. Test Installation Photographs, Test No. MGSWP-1 ....17
Figure 13. Test Installation Photographs, Test No. MGSWP-1 ....18
Figure 14. Test Installation Photographs, Test No. MGSWP-1 ....19
Figure 15. Test Vehicle, Test No. MGSWP-1 ....25
Figure 16. Vehicle Dimensions, Test No. MGSWP-1 ....26
Figure 17. Target Geometry, Test No. MGSWP-1 ....28
Figure 18. Camera Locations, Speeds, and Lens Settings, Test No. MGSWP-1 ....32
Figure 19. Summary of Test Results and Sequential Photographs, Test No. MGSWP-1 ....40
Figure 20. Additional Sequential Photographs, Test No. MGSWP-1 ....41
Figure 21. Additional Sequential Photographs, Test No. MGSWP-1 ....42
Figure 22. Additional Sequential Photographs, Test No. MGSWP-1 ....43
Figure 23. Additional Sequential Photographs, Test No. MGSWP-1 ....44
Figure 24. Documentary Photographs, Test No. MGSWP-1 ....45
Figure 25. Documentary Photographs, Test No. MGSWP-1 ....46
Figure 26. Documentary Photographs, Test No. MGSWP-1 ....47
Figure 27. Impact Location, Test No. MGSWP-1 ....48
Figure 28. Vehicle Final Position and Trajectory Marks, Test No. MGSWP-1 ....49
Figure 29. System Damage, Test No. MGSWP-1 ....50
Figure 30. System Damage, Test No. MGSWP-1 ....51
Figure 31. System Damage, Test No. MGSWP-1 ....52
Figure 32. System Damage, Test No. MGSWP-1 ....53
Figure 33. Post Nos. 8 through 10 Damage, Test No. MGSWP-1 ....54
Figure 34. Post Nos. 11 and 12 Damage, Test No. MGSWP-1 ....55
Figure 35. Post Nos. 13 and 14 Damage, Test No. MGSWP-1 ....56
Figure 36. Post Nos. 15 and 16 Damage, Test No. MGSWP-1 ....57
Figure 37. Post Nos. 17 and 18 Damage, Test No. MGSWP-1 ....58
Figure 38. Vehicle Damage, Test No. MGSWP-1 ....59
Figure 39. Vehicle Damage, Test No. MGSWP-1 ....60
Figure 40. Vehicle Undercarriage Damage, Test No. MGSWP-1 ....61
Figure 41. Occupant Compartment Damage, Test No. MGSWP-1 ....62
Figure A-1. 12-ft 6-in. (3,810-mm) Long W-Beam Guardrail Section Material Specifications, Test No. MGSWP-1 ....74
Figure A-2. 6-ft 3-in. (1,905-mm) Long W-Beam Guardrail Section Material Specifications, Test No. MGSWP-1 ....75

Figure A-3. BCT Anchor Timber Post Material Specifications, Test No. MGSWP-1 .....76
Figure A-4. BCT Anchor Timber Post Material Specifications, Test No. MGSWP-1 .....77
Figure A-5. BCT Anchor Foundation Tube Material Specifications, Test No. MGSWP-1.....78
Figure A-6. Groundline Strut and Yoke Assembly Material Specifications, Test No. MGSWP-1.....79
Figure A-7. BCT Anchor Post Sleeve Material Specifications, Test No. MGSWP-1.....80
Figure A-8. BCT Cable Anchor Assembly Material Specifications, Test No. MGSWP-1.....81
Figure A-9. BCT Cable Anchor Assembly, Test No. MGSWP-1.....82
Figure A-10. BCT Cable Anchor Bracket Assembly and End Plate Material Specifications, Test No. MGSWP-1.....83
Figure A-11. Splice Bolt Material Specifications, Test No. MGSWP-1.....84
Figure A-12. 10-in. (254-mm) Long Post Bolt Material Specifications, Test No. MGSWP-1.....85
Figure A-13. 10-in. (254-mm) Long Post Bolt Material Specifications, Test No. MGSWP-1.....86
Figure A-14. 10-in. (254-mm) Long Post Bolt Material Specifications, Test No. MGSWP-1.....87
Figure A-15. 10-in. (254-mm) Long Post Bolt Material Specifications, Test No. MGSWP-1.....88
Figure A-16. 10-in. (254-mm) Long Post Bolt Material Specifications, Test No. MGSWP-1.....89
Figure A-17. 10-in. (254-mm) Long Post Bolt Material Specifications, Test No. MGSWP-1.....90
Figure A-18. 10-in. (254-mm) Long Post Bolt Material Specifications, Test No. MGSWP-1.....91
Figure A-19. 10-in. (254-mm) Long Post Bolt Material Specifications, Test No. MGSWP-1.....92
Figure A-20. 10-in. (254-mm) Long Post Bolt Material Specifications, Test No. MGSWP-1.....93
Figure A-21. 22-in. (559-mm) Long Post Bolt Material Specifications, Test No. MGSWP-1.....94
Figure A-22. 22-in. (559-mm) Long Post Bolt Material Specifications, Test No. MGSWP-1.....95
Figure A-23. 22-in. (559-mm) Long Post Bolt Material Specifications, Test No. MGSWP-1.....96
Figure A-24. 22-in. (559-mm) Long Post Bolt Material Specifications, Test No. MGSWP-1.....97
Figure A-25. 22-in. (559-mm) Long Post Bolt Material Specifications, Test No. MGSWP-1.....98
Figure A-26. 22-in. (559-mm) Long Post Bolt Material Specifications, Test No. MGSWP-1.....99
Figure A-27. Guardrail Nut Material Specifications, Test No. MGSWP-1.....100
Figure A-28. Guardrail Nut Material Specifications, Test No. MGSWP-1.....101
Figure A-29. Guardrail Nut Material Specifications, Test No. MGSWP-1.....102
Figure A-30. Guardrail Nut Material Specifications, Test No. MGSWP-1.....103
Figure A-31. Guardrail Nut Material Specifications, Test No. MGSWP-1.....104
Figure A-32. 1½-in. (38-mm) Long Hex Bolt Material Specifications, Test No. MGSWP-1 ....105
Figure A-33. 1½-in. (38-mm) Long Hex Bolt Material Specifications, Test No. MGSWP-1 ....106
Figure A-34. 1½-in. (38-mm) Long Hex Bolt Material Specifications, Test No. MGSWP-1 ....107
Figure A-35. 1½-in. (38-mm) Long Hex Bolt Material Specifications, Test No. MGSWP-1 ....108
Figure A-36. 1½-in. (38-mm) Long Hex Bolt Material Specifications, Test No. MGSWP-1 ....109
Figure A-37. 9½-in. (241-mm) Long Hex Bolt and ⅝-in. (16-mm) Diameter Washer Material Specifications, Test No. MGSWP-1.....110
Figure A-38. ⅝-in. (16-mm) Diameter Hex Nut Material Specifications, Test No. MGSWP-1.....111
Figure B-1. Vehicle Mass Distribution, Test No. MGSWP-1 .....113
Figure C-1. Soil Strength, Initial Calibration Tests .....115
Figure C-2. Static Soil Test, Test No. MGSWP-1.....116
Figure D-1. Floor Pan Deformation Data – Set 1, Test No. MGSWP-1 .....118
Figure D-2. Floor Pan Deformation Data – Set 2, Test No. MGSWP-1 .....119
Figure D-3. Occupant Compartment Deformation Data – Set 1, Test No. MGSWP-1.....120
Figure D-4. Occupant Compartment Deformation Data – Set 2, Test No. MGSWP-1.....121

Figure D-5. Exterior Vehicle Crush (NASS) - Front, Test No. MGSWP-1 .....122
Figure D-6. Exterior Vehicle Crush (NASS) - Side, Test No. MGSWP-1.....123
Figure E-1. 10-ms Average Longitudinal Deceleration (DTS Set 1), Test No. MGSWP-1.....125
Figure E-2. Longitudinal Occupant Impact Velocity (DTS Set 1), Test No. MGSWP-1 .....126
Figure E-3. Longitudinal Occupant Displacement (DTS Set 1), Test No. MGSWP-1 .....127
Figure E-4. 10-ms Average Lateral Deceleration (DTS Set 1), Test No. MGSWP-1.....128
Figure E-5. Lateral Occupant Impact Velocity (DTS Set 1), Test No. MGSWP-1.....129
Figure E-6. Lateral Occupant Displacement (DTS Set 1), Test No. MGSWP-1.....130
Figure E-7. Vehicle Angular Displacements (DTS), Test No. MGSWP-1 .....131
Figure E-8. Graph of Acceleration Severity Index (DTS Set 1), Test No. MGSWP-1.....132
Figure E-9. 10-ms Average Longitudinal Deceleration (DTS Set 2), Test No. MGSWP-1.....133
Figure E-10. Longitudinal Occupant Impact Velocity (DTS Set 2), Test No. MGSWP-1 .....134
Figure E-11. Longitudinal Occupant Displacement (DTS Set 2), Test No. MGSWP-1 .....135
Figure E-12. 10-ms Average Lateral Deceleration (DTS Set 2), Test No. MGSWP-1.....136
Figure E-13. Lateral Occupant Impact Velocity (DTS Set 2), Test No. MGSWP-1.....137
Figure E-14. Lateral Occupant Displacement (DTS Set 2), Test No. MGSWP-1.....138
Figure E-15. 10-ms Average Longitudinal Deceleration (EDR-3), Test No. MGSWP-1.....139
Figure E-16. Longitudinal Occupant Impact Velocity (EDR-3), Test No. MGSWP-1.....140
Figure E-17. Longitudinal Occupant Displacement (EDR-3), Test No. MGSWP-1.....141
Figure E-18. 10-ms Average Lateral Deceleration (EDR-3), Test No. MGSWP-1 .....142
Figure E-19. Lateral Occupant Impact Velocity (EDR-3), Test No. MGSWP-1.....143
Figure E-20. Lateral Occupant Displacement (EDR-3), Test No. MGSWP-1.....144
Figure E-21. Graph of Acceleration Severity Index (EDR-3), Test No. MGSWP-1 .....145

# LIST OF TABLES

Table 1. MASH TL-3 Crash Test Conditions ..... 21
Table 2. MASH Evaluation Criteria for Longitudinal Barrier ..... 23
Table 3. Weather Conditions, Test No. MGSWP-1 ..... 33
Table 4. Sequential Description of Impact Events, Test No. MGSWP-1 ..... 34
Table 5. Maximum Occupant Compartment Deformations by Location ..... 37
Table 6. Summary of OIV, ORA, THIV, PHD, and ASI Values, Test No. MGSWP-1 ..... 38
Table 7. Summary of Safety Performance Evaluation Results ..... 67
Table 8. MGS with Steel and Wood Post Comparison ..... 68
Table G-1. Strong-Axis CRT Post Testing Results for SYP[C] ..... 148
Table G-2. Strength Calculations for Equivalent White Pine CRT Post ..... 149

# 1 INTRODUCTION

## 1.1 Background

W-beam guardrail systems are normally used to prevent motorists from striking serious hazards adjacent to low- and medium-service level highways. However, these barriers rely on energy dissipation associated with the rotation of guardrail posts in soil, fracture of the post, bending of the post, twisting of the post, or a combination of failure modes and incur significant dynamic deflections during design impact events. If sufficient post rotation in the soil does not occur, but instead the post fractures soon after impact, there is a significant chance that the barrier will not perform satisfactorily. In cases where wood posts are utilized, the posts should have sufficient structural capacity to displace founding soils and absorb energy. If wood posts have insufficient bending strength, the bulk of the impacting vehicle's energy is absorbed by the W-beam rail element, potentially leading to rupture of the rail element and subsequent penetration of the impacting vehicle.

The Midwest Guardrail System (MGS) has demonstrated improved vehicle containment, safety performance, and redirective capacity over that provided by conventional, strong-post, W-beam guardrail systems [1-11]. The MGS utilizes mid-span guardrail splices, an increased top rail mounting height of 31 in. (787 mm), an increased blockout depth of 12 in. (305 mm), and a reduced post embedment of 40 in. (1,016 mm). From the seemingly simple design changes, the redirective capacity of the MGS has proven to more than double that provided by standard W-beam guardrail systems [1-11]. The MGS has also been shown to provide satisfactory safety performance when used in combination with curbs, culverts, slopes, and other roadside anomalies. Implementation of the MGS has generated a desire from several state agencies to use various wood post species in the system.

Previous research at Midwest Roadside Safety Facility (MwRSF) investigated the use of rectangular Red Pine (RP) and White Pine (WP) posts for use with W-beam guardrail systems [12]. These two species have lower strengths than the standard Southern Yellow Pine (SYP) post. Component testing of these post species found that the capacity of White Pine was approximately 39% lower than SYP. This research recommended that the size of the WP posts be increased from the standard 6-in. x 8-in. (152-mm x 203-mm) post to 6-in. x 10⅜-in. (152-mm x 264-mm) in order to develop strength similar to the standard SYP post. However, a desire exists to evaluate wood post species using the standard 6-in. x 8-in. (152-mm x 203-mm) sized post with the MGS.

The MGS utilizes posts with approximately 4 in. (102-mm) less embedment than standard W-beam which results in lower soil forces imparted on the posts indicating that the use of a lower capacity post with the MGS may be a possibility. In addition, the lower strength of WP posts would allow the posts to fracture at lower loads than typical SYP posts and reduce the potential for significant wheel snag on the posts. The reduction in post embedment and the position of the splices also increases the capacity of the rail element in the MGS, which would reduce the potential for rail rupture and penetration if the WP posts fractured with little rotation in the soil. As such, it is believed that the basic MGS system could be effective when installed with WP posts having the same size but lower strength than the standard 6-in. x 8-in. (152-mm x 203-mm) SYP post.

## 1.2 Objective

The objective of this research was to evaluate the performance of the MGS configured with standard 6-in. x 8-in. (152-mm x 203-mm) WP wood posts. The barrier system was to be evaluated according to the Test Level 3 (TL-3) safety performance criteria set forth in the

American Association of State Highway and Transportation Officials (AASHTO) *Manual for Assessing Safety Hardware (MASH)* [13].

### 1.3 Scope

The research objective was achieved through the completion of several tasks. First, a full-scale vehicle crash test was performed on the MGS configured with standard size WP wood posts The crash test utilized a pickup truck, weighing approximately 5,000 lb (2,268 kg). The target impact conditions for the test were an impact speed of 62 mph (100 km/h) and an impact angle of 25 degrees. Next, the test results were analyzed, evaluated, and documented. Finally, conclusions and recommendations were made that pertain to the safety performance of the MGS with WP wood posts.

# 2 DESIGN DETAILS

The test installation consisted of 175 ft (53.3 m) of MGS guardrail supported by white pine wood posts. Anchorage systems similar to those used on tangent guardrail terminals were utilized on both the upstream and downstream ends of the guardrail system. Design details are shown in Figures 1 through 11. Photographs of the test installation are shown in Figures 12 and 13. Material specifications, inspection details, mill certifications, and certificates of conformity for the system materials are shown in Appendix A.

The system was constructed with twenty-nine guardrail posts. Post nos. 3 through 27 were WP wood posts measuring 6 in. wide x 8 in. deep x 72 in. long (152 mm x 203 mm x 1,829 mm) conforming to the 2009 Wisconsin Standard Specifications listed in Figure 10. Each post was inspected according to the WP wood post specifications listed in Figure 11. The allowable size of shakes, checks, splits, and maximum wane were considered for both the 6 and 8 in. (152 and 203 mm) faces of each post. The maximum allowable size of knots was only considered for the wide face of each post, which corresponded to the 8 in. (203 mm) face. A post was only installed in the system if it was verified to meet each requirement listed herein. Post nos. 1, 2, 28, and 29 were breakaway cable terminal (BCT) timber posts measuring 5½ in. wide x 7½ in. deep x 46 in. long (140 mm x 191 mm x 1,168 mm) and were placed in long steel foundation tubes, as shown in Figure 3. The BCT posts and foundation tubes were part of the anchor system designed to replicate the capacity of a tangent guardrail terminal.

Post nos. 3 through 27 were spaced 75 in. (1,905 mm) on center with a soil embedment depth of 40 in. (1,016 mm), as shown in Figures 1 and 2. All posts were placed in a compacted, coarse, crushed limestone material that met Grading B of AASHTO M147-65 (1990) as described in MASH. For post nos. 3 through 27, 6-in. wide x 12-in. deep x 14¼-in. long (152-

mm x 305-mm x 362-mm) SYP wood spacer blockouts were used to block the rail away from the front face of the wood posts, as shown in Figures 2 and 5.

Standard 12-gauge (2.66-mm thick) W-beam rails with additional post bolt slots at half post spacing intervals were placed between post nos. 1 and 29, as shown in Figures 1, 2, and 9. The top mounting height of the w-beam rail was 31 in. (787 mm) above the ground with a 24⅞-in. (632-mm) center mounting height. Rail splices were placed at midspan locations between guardrail posts, as shown in Figures 1 and 2. All lap splice connections between the rail sections were configured to reduce vehicle snag at the splice during the crash test.

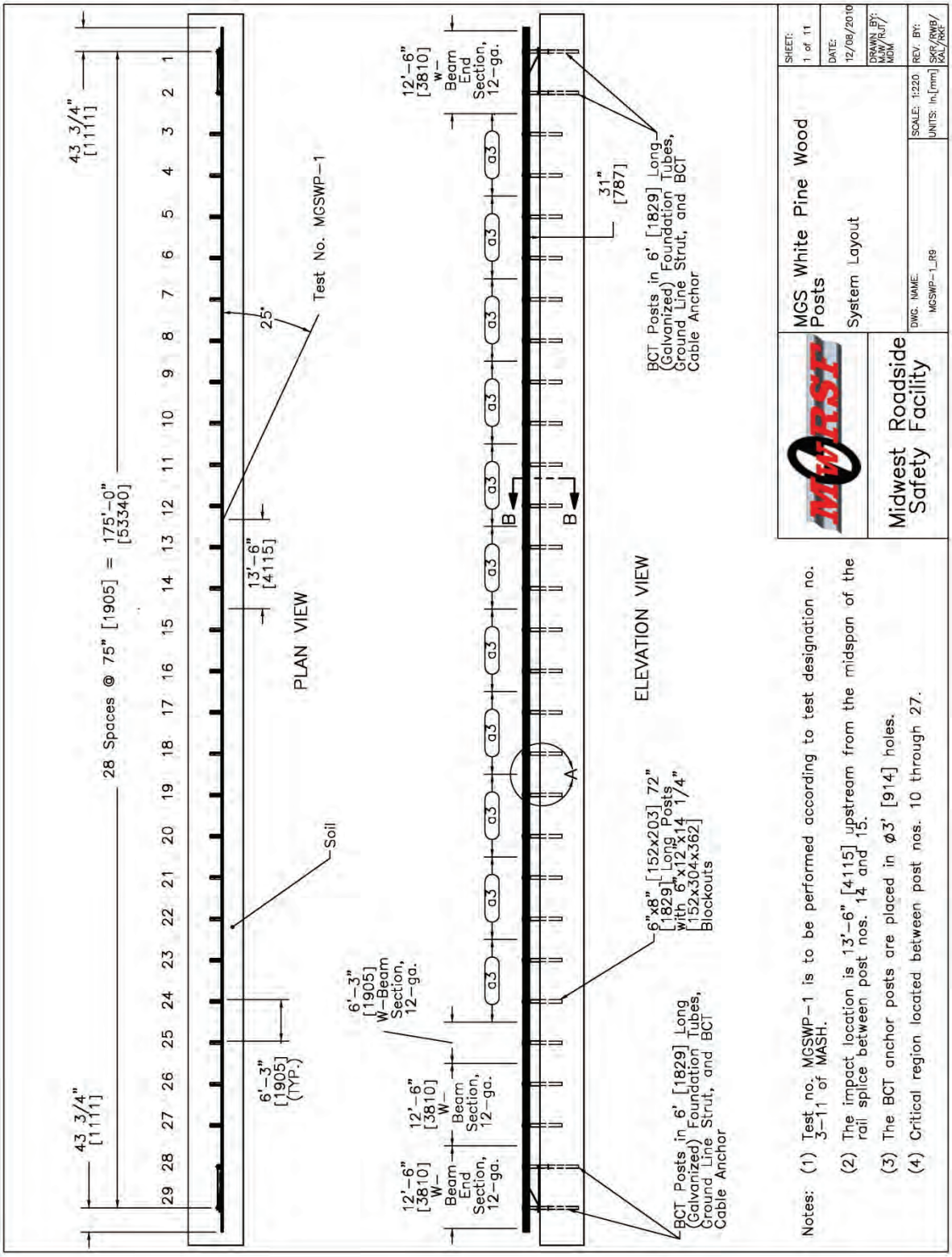


Figure 1. Test Installation Layout, Test No. MGSWP-1

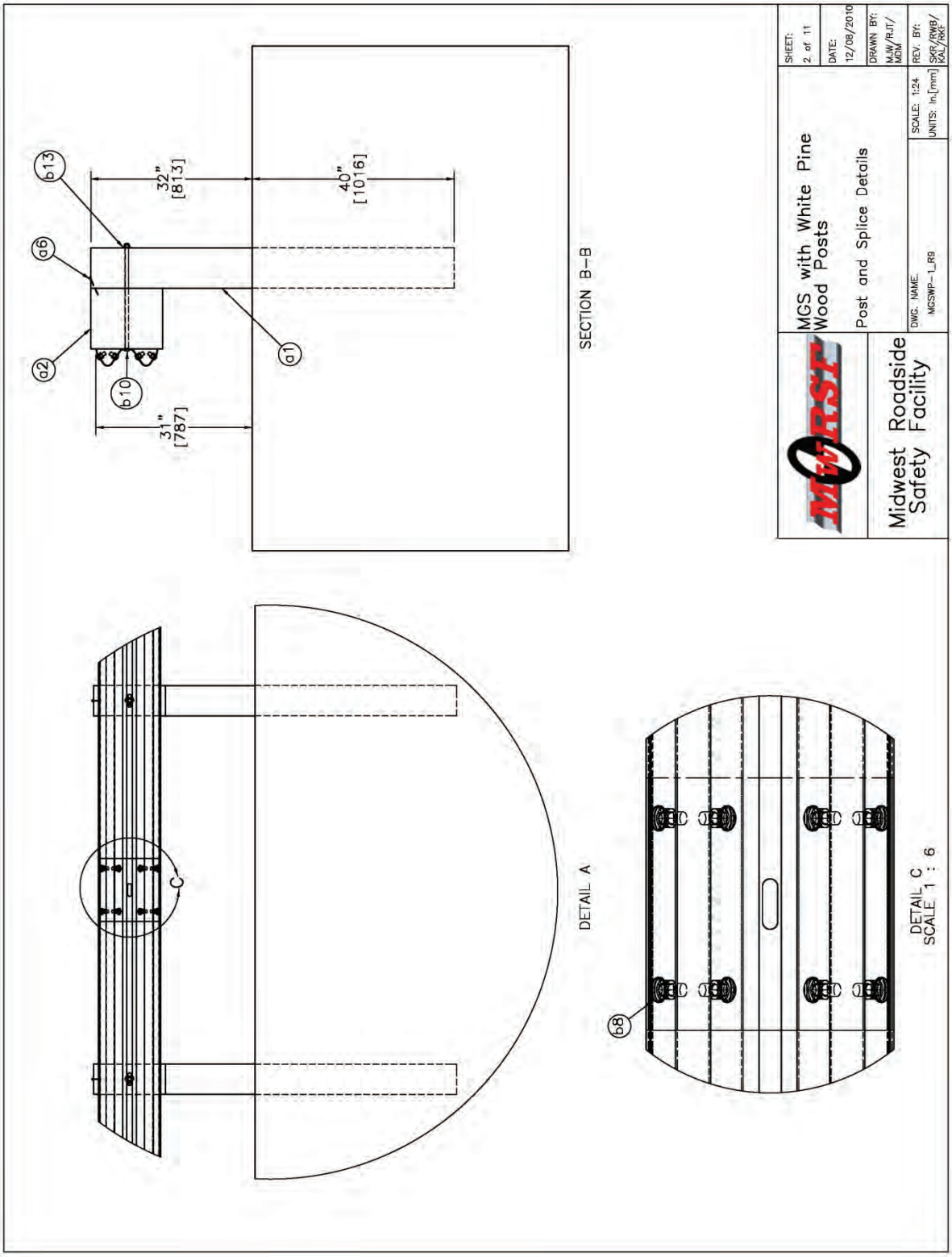


Figure 2. Post and Splice Details, Test No. MGSWP-1

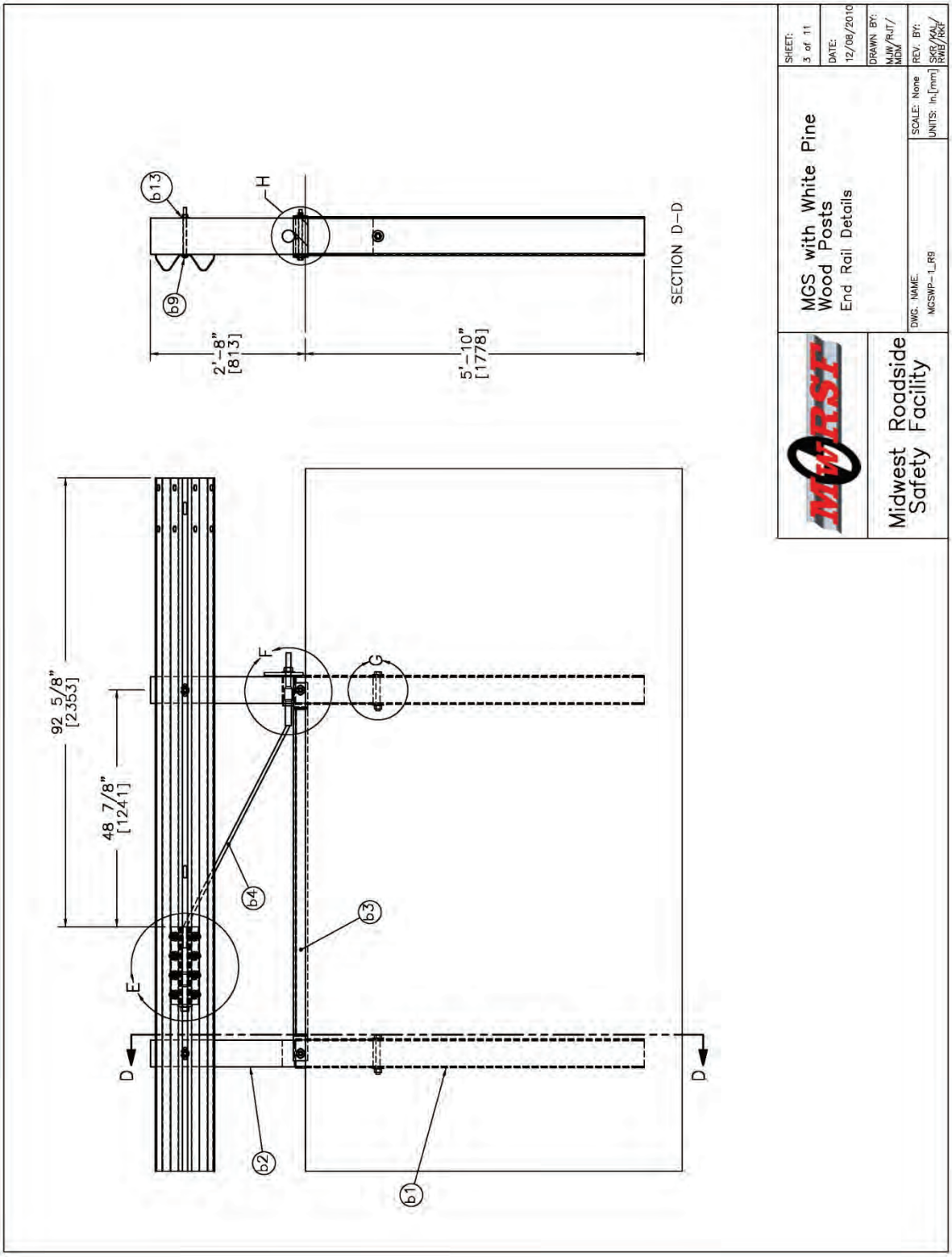


Figure 3. End Rail Details, Test No. MGSWP-1

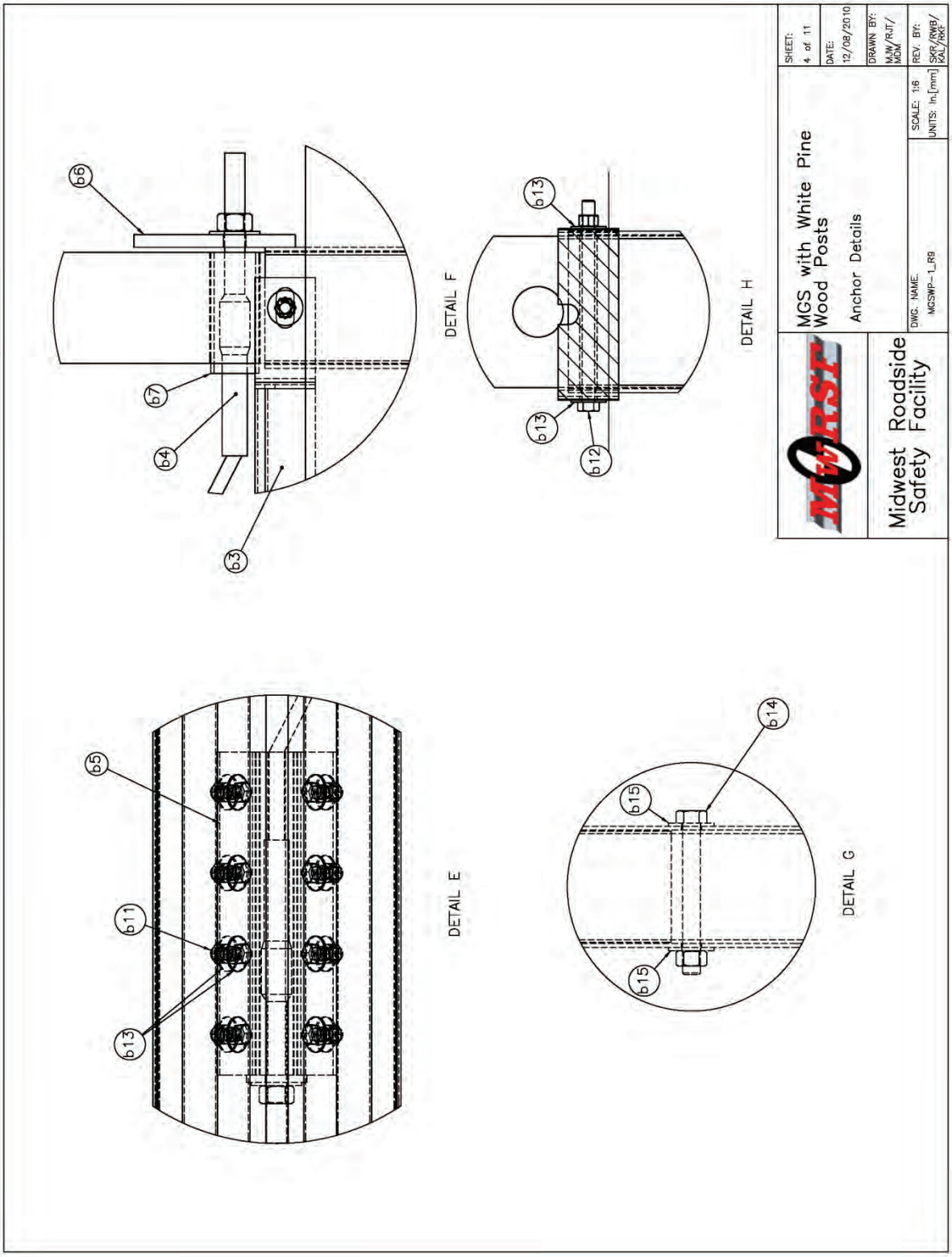


Figure 4. Anchor Details, Test No. MGSWP-1

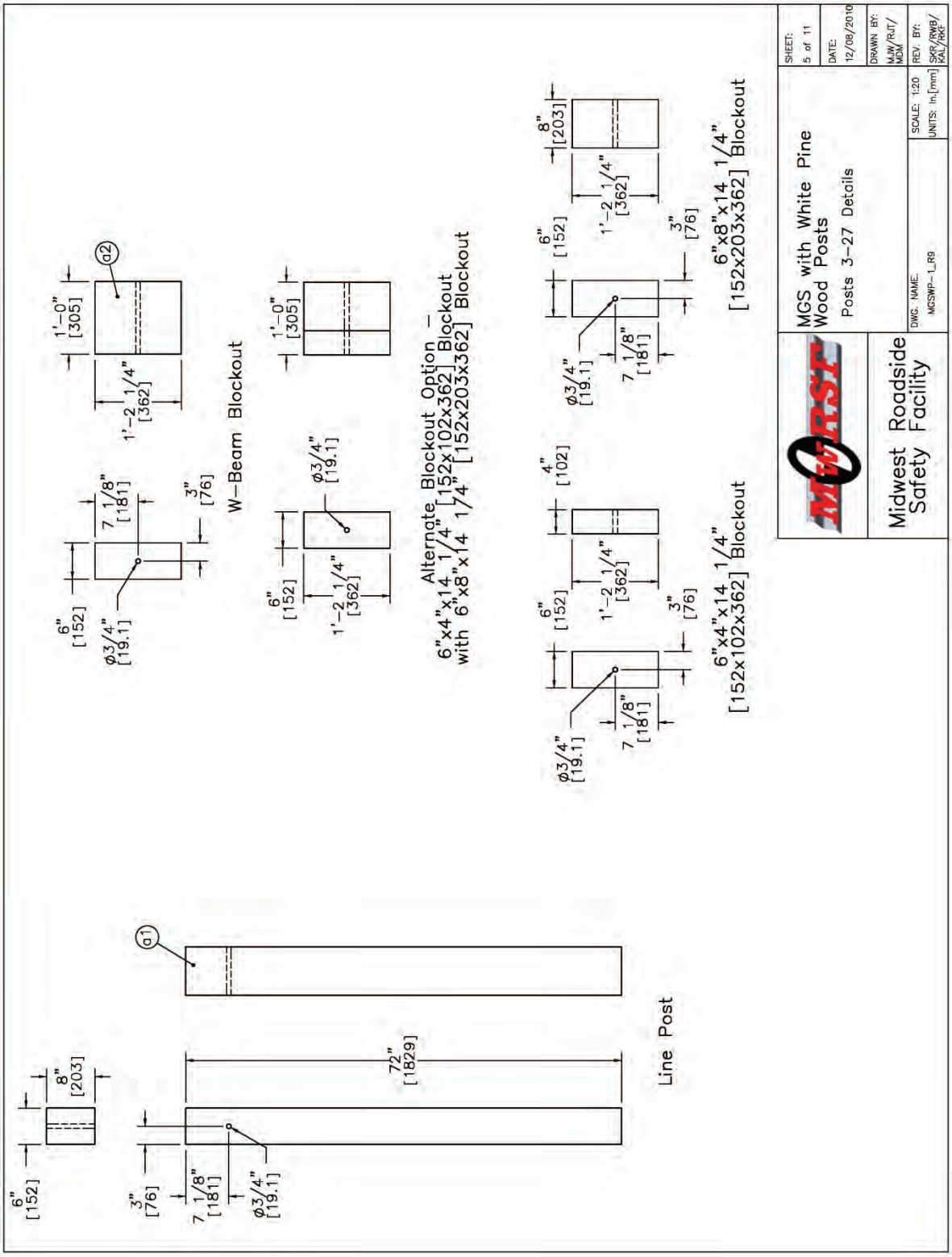


Figure 5. Line Post and Blockout Details, Test No. MGSWP-1

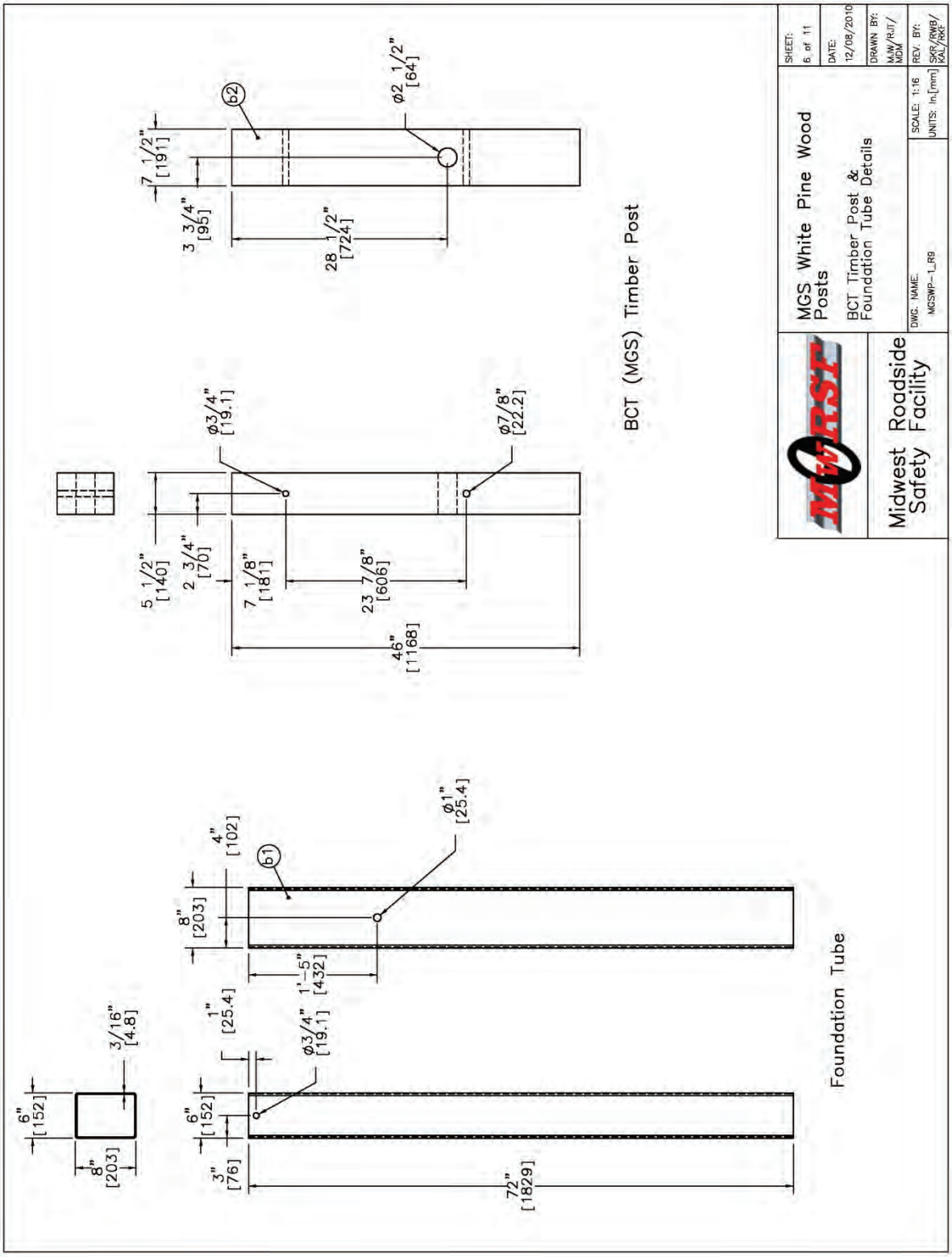


Figure 6. BCT Timber Post and Foundation Tube Details, Test No. MGSWP-1

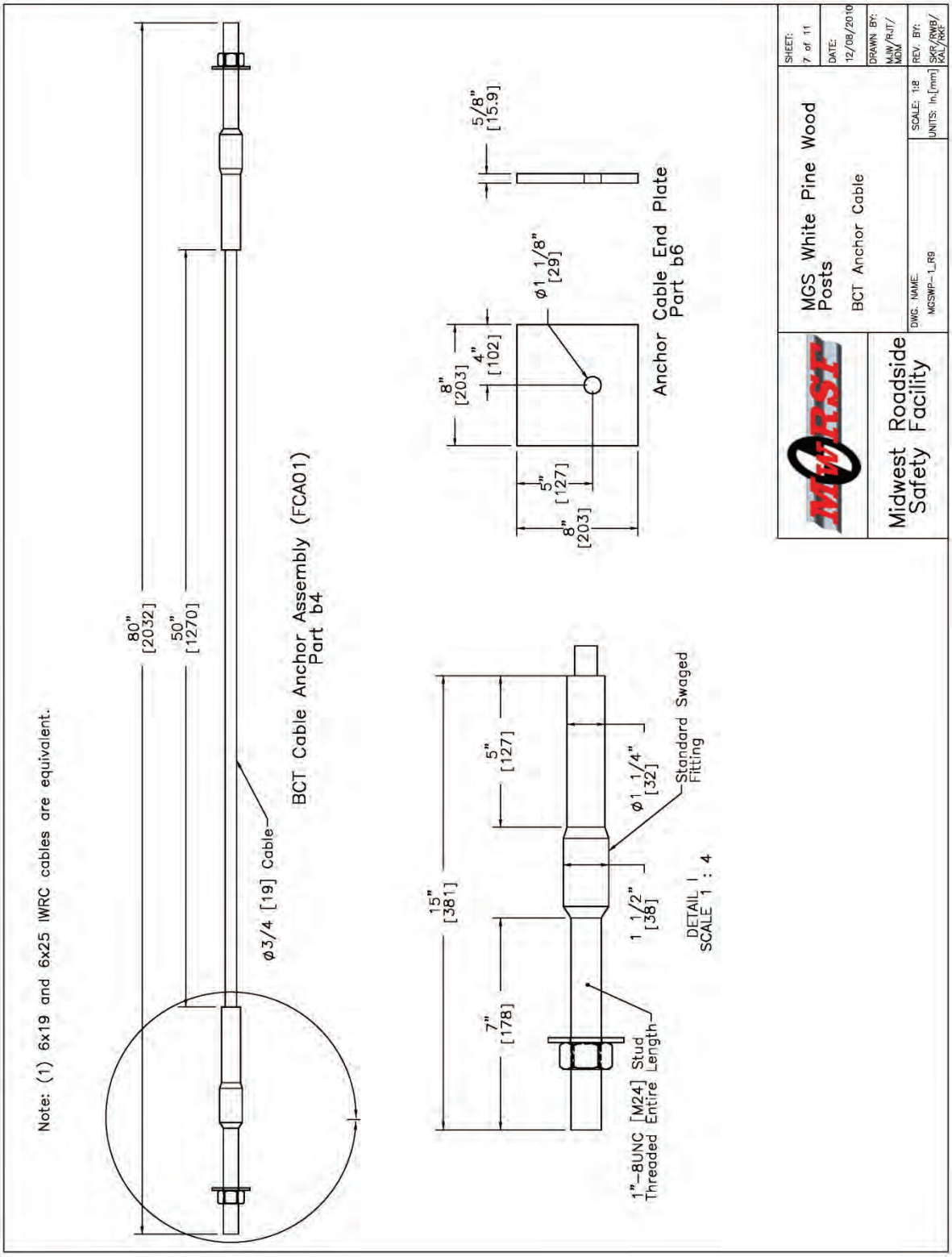


Figure 7. BCT Anchor Cable Details, Test No. MGSWP-1

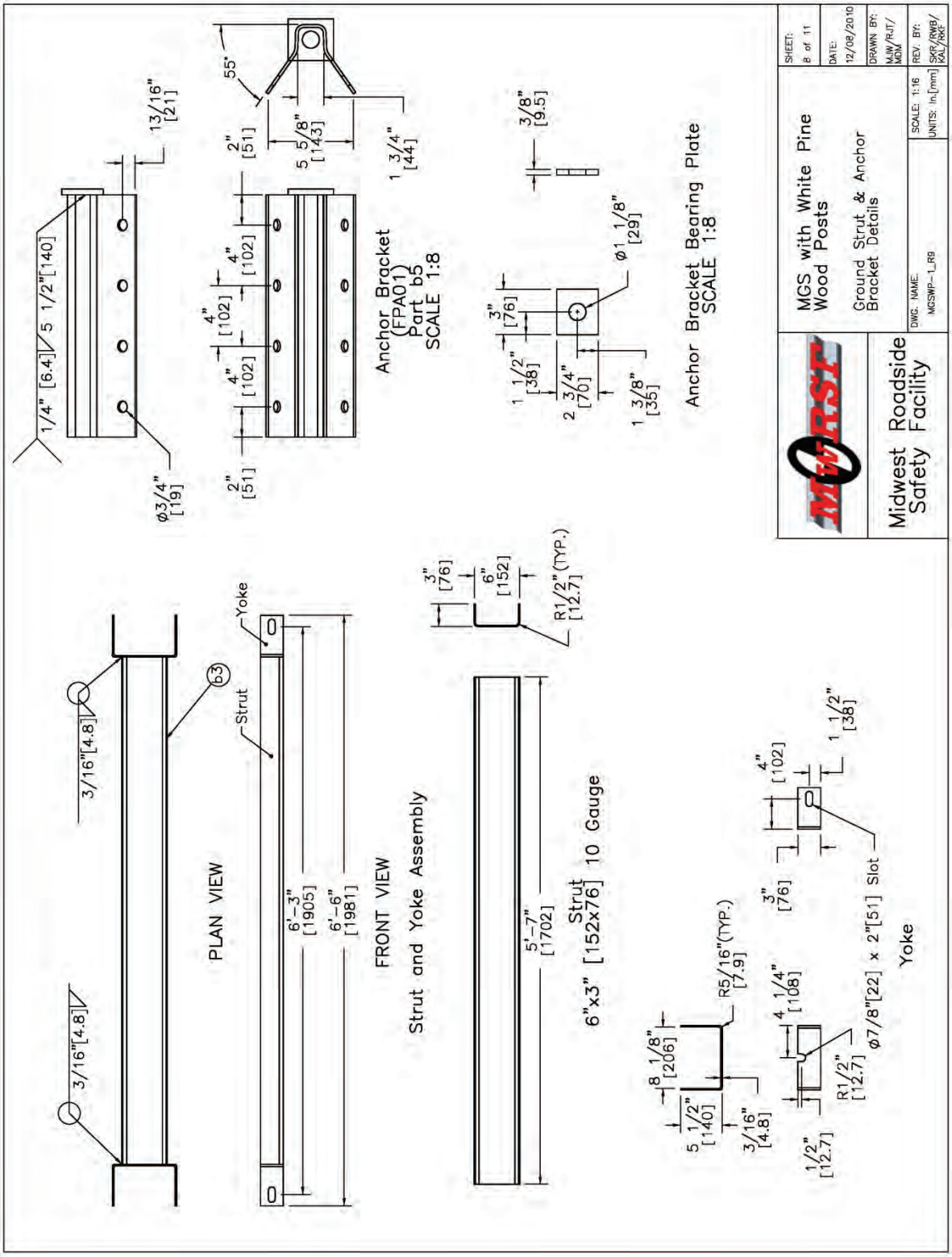


Figure 8. Ground Strut and Anchor Bracket Details, Test No. MGSWP-1

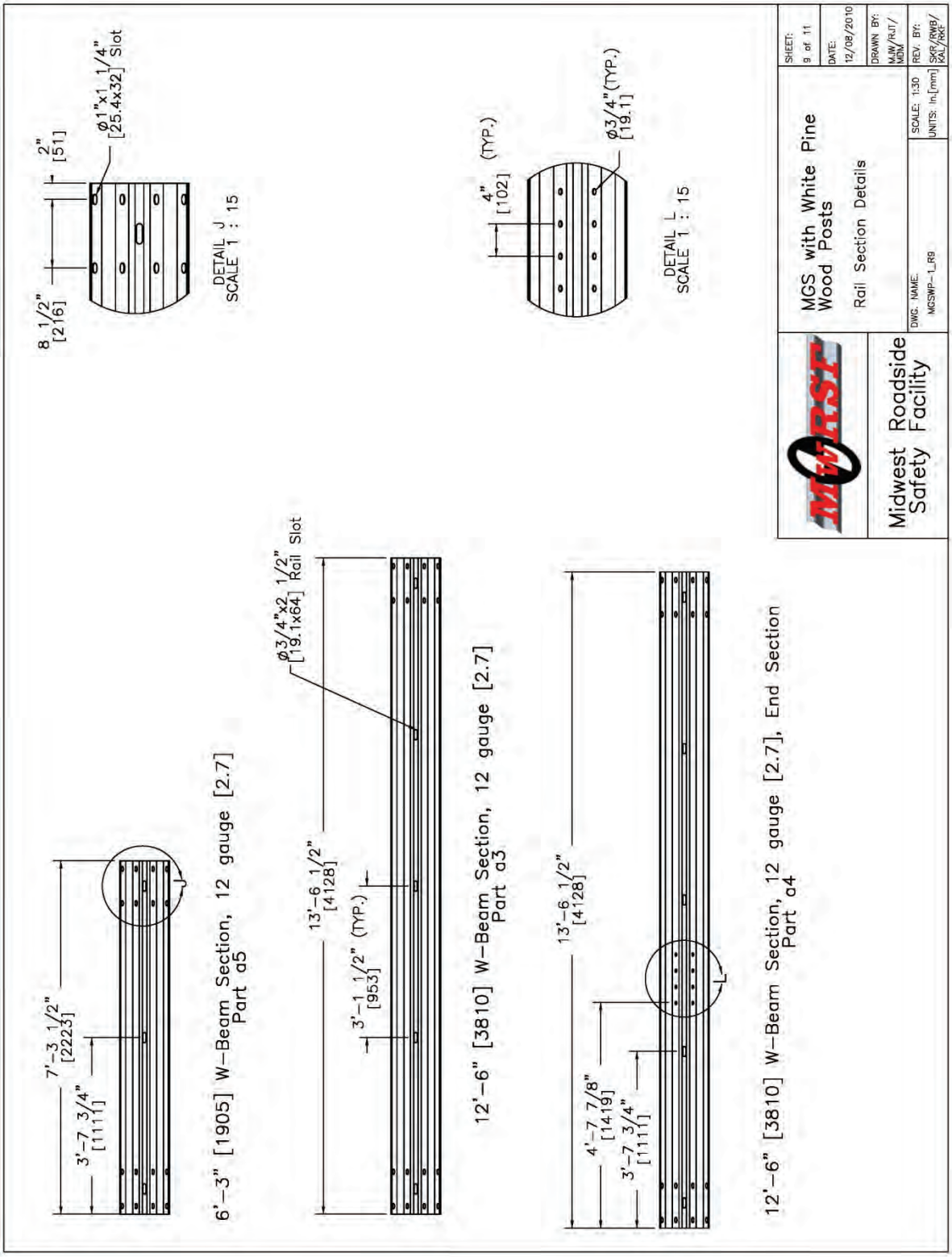


Figure 9. Rail Section Details, Test No. MGSWP-1

| Item No. | QTY. | Description | Material Specification | Hardware Guide |
|---|---|---|---|---|
| a1 | 25 | 6"x8"x72" [152x203x1829] White Pine Wood Post | Wisconsin *2009 Standard Specifications* Sections 614.2.4, 614.2.6,507.2.2.3, and 507.2.2.4 | – |
| a2 | 25 | 6"x12"x14 1/4" [152x305x362] Blockout | SYP Grade No.1 or better | PDB10a–b |
| a3 | 12 | 12'–6" [3810] W–Beam MGS Section | 12 gauge [2.7] AASHTO M180 | RWM04a |
| a4 | 2 | 12'–6" [3810] W–Beam MGS End Section | 12 gauge [2.7] AASHTO M180 | RWM14a |
| a5 | 1 | 6'–3" [1905] W–Beam MGS Section | 12 gauge [2.7] AASHTO M180 | RWM01a |
| a6 | 25 | 16D Double Head Nail | – | – |
| b1 | 4 | 6"x8"x72" [152x203x1829] Foundation Tube | ASTM A500 Gr. B | PTE06 |
| b2 | 4 | BCT Timber Post–MGS Height | SYP Grade No. 1 or better | PDF01 |
| b3 | 2 | Strut and Yoke Assembly | ASTM A36 Steel Galvanized | – |
| b4 | 4 | BCT Cable Anchor Assembly | ø3/4" 6x19 IWRC IPS Galvanized Wire Rope | FCA01–02 |
| b5 | 2 | Anchor Bracket Assembly | ASTM A36 Galvanized | FPA01 |
| b6 | 2 | 8"x8"x5/8" [203x203x15.9] Anchor Cable End Plate | ASTM A36 Galvanized | FPB01 |
| b7 | 2 | 2 3/8" [60] O.D.x 6" [152] Long BCT Post Sleeve | ASTM A53 Grade B Schedule 40 | FMM02 |
| b8 | 112 | 5/8" [16] Dia. x 1 1/4" [32] Long Guardrail Bolt and Nut | ASTM A307 | FBB01 |
| b9 | 4 | 5/8" [16] Dia. x 10" [254] Long Guardrail Bolt and Nut | ASTM A307 | FBB03 |
| b10 | 25 | 5/8" [16] Dia. x 22" [559] Long Guardrail Bolt and Nut | ASTM A307 | FBB07 |
| b11 | 16 | 5/8" [16] Dia. x 1 1/2" [38] Long Hex Head Bolt and Nut | ASTM A307 | FBX16a |
| b12 | 4 | 5/8" [16] Dia. x 9.5" [241] Long Hex Head Bolt and Nut | ASTM A307 | FBX16a |
| b13 | 69 | 5/8" [16] Dia. Flat Washer | ASTM F436 Grade 1 | FWC14a |
| b14 | 4 | 7/8" [22] Dia. x 7 1/2" [191] Long Hex Head Bolt and Nut | ASTM A307 | FBX22a |
| b15 | 8 | 7/8" [22] Dia. Flat Washer | ASTM F436 Grade 1 | FWC22a |

| | | | |
|---|---|---|---|
| MwRSF Midwest Roadside Safety Facility | MGS with White Pine Wood Posts<br>Bill of Materials | | SHEET: 10 of 11 |
| | | | DATE: 12/08/2010 |
| | | | DRAWN BY: MJW/RJT/MDM |
| | DWG. NAME. MGSWP–1_R9 | SCALE: None<br>UNITS: In.[mm] | REV. BY: SKR/RWB/KAL/RKF |

Figure 10. Bill of Materials, Test No. MGSWP-1

| SPECIES | | | WHITE PINE | |
|---|---|---|---|---|
| MAXIMUM SLOPE OF GRAIN | | | 1 in 15 | |
| NOMINAL WIDTH OF FACE | | | 6" [152] | 8" [203] |
| SHAKES, CHECKS, AND SPLITS | | GREEN | 1" [25] | 1 3/8" [35] |
| | | SEASONED | 1 1/2" [38] | 2" [51] |
| MAXIMUM WANE | | | 1" [25] | 1 3/8" [35] |
| MAXIMUM ALLOWABLE KNOTS | NARROW FACE | MIDDLE 1/3 OF LENGTH | 1 3/8" [35] | 1 5/8" [41] |
| | | END (1) | 2 3/4" [70] | 3 1/4" [83] |
| | | SUM IN MIDDLE 1/2 OF LENGTH (2) | 11" [279] | 13" [330] |
| | WIDE FACE | EDGE KNOT IN MIDDLE 1/3 OF LENGTH | 1 3/8" [35] | 1 5/8" [41] |
| | | EDGE KNOT AT END (1) | 2 3/4" [70] | 3 1/4" [83] |
| | | CENTERLINE | 1 3/8" [35] | 1 7/8" [48] |
| | | SUM IN MIDDLE 1/2 OF LENGTH | 5 1/2" [140] | 7 1/2" [190] |

Notes: (1) Do not exceed the maximum allowable knot on the centerline of the wide face of the same piece.

(2) Do not exceed 4 times the maximum allowable knot on the centerline of the wide face of the same piece.

(3) This table was taken directly from the Wisconsin Department of Transportation's *2009 Standard Specifications*_Section 614.2.4.2 page 402.

| | | | |
|---|---|---|---|
| MwRSF | MGS with White Pine Wood Posts | | SHEET: 11 of 11 |
| | | | DATE: 12/08/2010 |
| Midwest Roadside Safety Facility | Wisconsin White Pine Wood Post Specifications | | DRAWN BY: MJW/RJT/ MDM |
| | DWG. NAME. MGSWP-1_R9 | UNITS: In.[mm] SCALE: 1:10 | REV. BY: SKR/RWB/ KAL/RKF |

Figure 11. Wisconsin WP Wood Post Specifications, Test No. MGSWP-1

Figure 12. Test Installation Photographs, Test No. MGSWP-1

Figure 13. Test Installation Photographs, Test No. MGSWP-1

Figure 14. Test Installation Photographs, Test No. MGSWP-1

# 3 TEST REQUIREMENTS AND EVALUATION CRITERIA

## 3.1 Test Requirements

Longitudinal barriers, such as W-beam guardrails, must satisfy impact safety standards in order to be accepted by the Federal Highway Administration (FHWA) for use on National Highway System (NHS) new construction projects or as a replacement for existing designs not meeting current safety standards. In recent years, these safety standards have consisted of the guidelines and procedures published in NCHRP Report No. 350 [14]. However, NCHRP Project 22-14(2) generated revised testing procedures and guidelines for use in the evaluation of roadside safety appurtenances and are provided in MASH [13]. According to TL-3 of MASH, longitudinal barrier systems must be subjected to two full-scale vehicle crash tests. The two full-scale crash tests are noted below:

1. Test Designation No. 3-10 consists of a 2,425-lb (1,100-kg) passenger car impacting the system at a nominal speed and angle of 62 mph (100 km/h) and 25 degrees, respectively.

2. Test Designation No. 3-11 consists of a 5,000-lb (2,268-kg) pickup truck impacting the system at a nominal speed and angle of 62 mph (100 km/h) and 25 degrees, respectively.

However, W-beam barriers struck by small cars have been shown to meet safety performance standards with little lateral deflections and with no significant potential for occupant risk problems [1-4,7-11]. In addition, the MGS with maximum height tolerance, or 32 in. (813 mm), was successfully impacted by a small car weighing 1,174 kg (2,588 lb) at 97.8 km/h (60.8 mph) and 25.4 degrees according to the TL-3 safety performance criteria set for in MASH [13]. In addition, the pickup truck test was deemed more critical as the more massive truck would induce much higher rail loads and system deflections, thus yielding the highest potential for structural failure of the system and/or vehicle instabilities. Therefore, the 2,425-lb (1,100-kg) passenger car crash test was deemed unnecessary for this project. Thus, only test

designation no. 3-11 with the 5,000-lb (2,268-kg) pickup truck was conducted for the system described herein. The test conditions of TL-3 longitudinal barriers are summarized in Table 1.

Table 1. MASH TL-3 Crash Test Conditions

| Test Article | Test Designation | Test Vehicle | Impact Conditions | | | Evaluation Criteria [1] |
|---|---|---|---|---|---|---|
| | | | Speed | | Angle (deg) | |
| | | | mph | km/h | | |
| Longitudinal Barrier | 3-10 | 1100C | 62 | 100 | 25 | A,D,F,H,I |
| | 3-11 | 2270P | 62 | 100 | 25 | A,D,F,H,I |

[1] Evaluation criteria explained in Table 2.

### 3.2 Evaluation Criteria

Evaluation criteria for full-scale vehicle crash testing are based on three appraisal areas: (1) structural adequacy; (2) occupant risk; and (3) vehicle trajectory after collision. Criteria for structural adequacy are intended to evaluate the ability of the guardrail to contain and redirect impacting vehicles. In addition, controlled lateral deflection of the test article is acceptable. Occupant risk evaluates the degree of hazard to occupants in the impacting vehicle. Vehicle trajectory after collision is a measure of the potential for the post-impact trajectory of the vehicle to result in a secondary collision with other vehicles and/or fixed objects, thereby increasing the risk of injury to the occupant of the impacting vehicle and/or other vehicles. These evaluation criteria are summarized in Table 2 and defined in greater detail in MASH. The full-scale vehicle crash test was conducted and reported in accordance with the procedures provided in MASH.

In addition to the standard occupant risk measures, the Post-Impact Head Deceleration (PHD), the Theoretical Head Impact Velocity (THIV), and the Acceleration Severity Index (ASI) were determined and reported on the test summary sheet. Additional discussion on PHD, THIV and ASI is provided in reference 13.

### 3.3 Soil Strength Requirements

In order to limit the variation of soil strength among testing agencies, foundation soil must satisfy the recommended performance characteristics set forth in Chapter 3 and Appendix B of MASH. Testing facilities must first subject their soil to a dynamic post test to demonstrate a minimum dynamic load of 7.5 kips (33.4 kN) at deflections between 5 and 20 in. (127 and 508 mm). If satisfactory results are observed, a static test is conducted using an identical test installation. The results from this static test become the baseline requirement for soil strength in future full-scale testing. On the day of the full-scale test, an additional post installed near the impact point is to be statically tested in the same manner as used for the baseline static test. If the static test results reveal a post-soil resistance equal to or greater than 90 percent of the baseline test results at deflections of 5, 10, and 15 in. (127, 254, and 381 mm), the full-scale test can be conducted. Otherwise, the crash test must be postponed until the soil demonstrates adequate post-soil strength.

Table 2. MASH Evaluation Criteria for Longitudinal Barrier

<table>
<tr><td>Structural Adequacy</td><td>A.</td><td colspan="3">Test article should contain and redirect the vehicle or bring the vehicle to a controlled stop; the vehicle should not penetrate, underride, or override the installation although controlled lateral deflection of the test article is acceptable.</td></tr>
<tr><td rowspan="6">Occupant Risk</td><td>D.</td><td colspan="3">Detached elements, fragments or other debris from the test article should not penetrate or show potential for penetrating the occupant compartment, or present an undue hazard to other traffic, pedestrians, or personnel in a work zone. Deformations of, or intrusions into, the occupant compartment should not exceed limits set forth in Section 5.3 and Appendix E of MASH.</td></tr>
<tr><td>F.</td><td colspan="3">The vehicle should remain upright during and after collision. The maximum roll and pitch angles are not to exceed 75 degrees.</td></tr>
<tr><td rowspan="3">H.</td><td colspan="3">Occupant Impact Velocity (OIV) (see Appendix A, Section A5.3 of MASH for calculation procedure) should satisfy the following limits:</td></tr>
<tr><td colspan="3">Occupant Impact Velocity Limits</td></tr>
<tr><td>Component</td><td>Preferred</td><td>Maximum</td></tr>
<tr><td>Longitudinal and Lateral</td><td>30 ft/s<br>(9.1 m/s)</td><td>40 ft/s<br>(12.2 m/s)</td></tr>
<tr><td rowspan="3">I.</td><td colspan="3">The Occupant Ridedown Acceleration (ORA) (see Appendix A, Section A5.3 of MASH for calculation procedure) should satisfy the following limits:</td></tr>
<tr><td colspan="3">Occupant Ridedown Acceleration Limits</td></tr>
<tr><td>Component</td><td>Preferred</td><td>Maximum</td></tr>
<tr><td>Longitudinal and Lateral</td><td>15.0 g’s</td><td>20.49 g’s</td></tr>
</table>

# 4 TEST CONDITIONS

## 4.1 Test Facility

The testing facility is located at the Lincoln Air Park on the northwest side of the Lincoln Municipal Airport and is approximately 5 miles (8.0 km) northwest of the University of Nebraska-Lincoln.

## 4.2 Vehicle Tow and Guidance System

A reverse cable tow system with a 1:2 mechanical advantage was used to propel the test vehicle. The distance traveled and the speed of the tow vehicle were one-half that of the test vehicle. The test vehicle was released from the tow cable before impact with the barrier system. A digital speedometer on the tow vehicle increased the accuracy of the test vehicle impact speed.

A vehicle guidance system developed by Hinch [15] was used to steer the test vehicle. A guide-flag, attached to the left-front wheel and the guide cable, was sheared off before impact with the barrier system. The ⅜-in. (9.5-mm) diameter guide cable was tensioned to approximately 3,500 lb (15.6 kN) and supported both laterally and vertically every 100 ft (30.5 m) by hinged stanchions. The hinged stanchions stood upright while holding up the guide cable, but as the vehicle was towed down the line, the guide-flag struck and knocked each stanchion to the ground.

## 4.3 Test Vehicle

For test no. MGSWP-1, a 2003 Dodge Ram Quad Cab 1500 pickup truck was used as the test vehicle. The curb, test inertial, and gross static vehicle weights were 4,979 lb (2,258 kg), 4,999 lb (2,268 kg), and 5,169 lb (2,345 kg), respectively. The test vehicle is shown in Figure 15, and vehicle dimensions are shown in Figure 16.

Figure 15. Test Vehicle, Test No. MGSWP-1

Date: 4/2/2010 Test Number: MGSWP-1 Model: 2270P Dodge Ram

Make: Dodge Vehicle I.D.#: 1D7H8A18N83J536883

Tire Size: 265/70R17 Year: 2003 Odometer: 97414

Tire Inflation Pressure: 35 Psi

*(All Measurements Refer to Impacting Side)

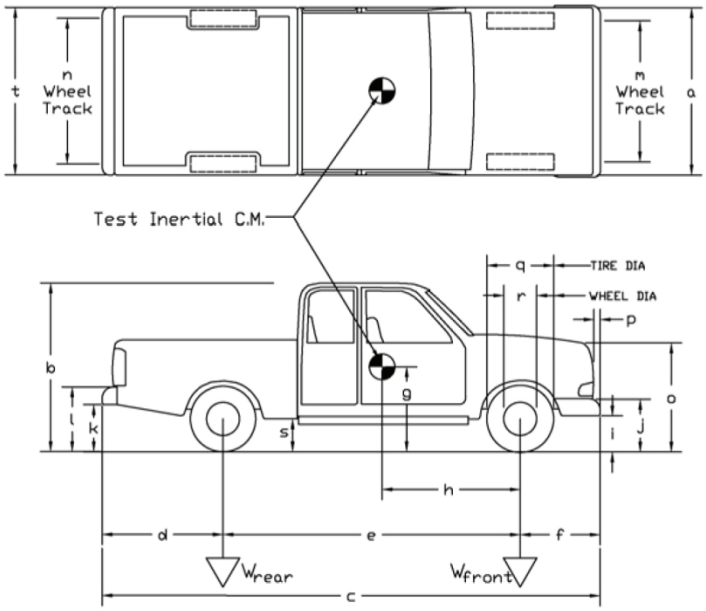


Vehicle Geometry -- in. (mm)

| | | | | | |
|---|---|---|---|---|---|
| a | 78 | (1981) | b | 74.5 | (1892) |
| c | 227.5 | (5779) | d | 46.75 | (1187) |
| e | 140.5 | (3569) | f | 40.25 | (1022) |
| g | 28.00 | (711) | h | 63.01 | (1600) |
| i | 14.25 | (362) | j | 26 | (660) |
| k | 21 | (533) | l | 29.5 | (749) |
| m | 71 | (1803) | n | 67.5 | (1715) |
| o | 44 | (1118) | p | 3 | (76) |
| q | 30.5 | (775) | r | 18.25 | (464) |
| s | 15.75 | (400) | t | 75.5 | (1918) |
| Wheel Center Height Front | 14.75 | (375) | | | |
| Wheel Center Height Rear | 15 | (381) | | | |
| Wheel Well Clearance (F) | 34.75 | (883) | | | |
| Wheel Well Clearance (R) | 38 | (965) | | | |
| Frame Height (F) | 16.75 | (425) | | | |
| Frame Height (R) | 25.25 | (641) | | | |

Mass Distribution lb (kg)

| | | | | | | |
|---|---|---|---|---|---|---|
| Gross Static | LF | 1420 | (644) | RF | 1442 | (654) |
| | LR | 1126 | (511) | RR | 1181 | (536) |

Engine Type 8Cyl Gas

Engine Size 4.7L

Weights lb (kg)

| | Curb | | Test Inertial | | Gross Static | |
|---|---|---|---|---|---|---|
| W-front | 2789 | (1265) | 2757 | (1251) | 2862 | (1298) |
| W-rear | 2190 | (993) | 2242 | (1017) | 2307 | (1046) |
| W-total | 4979 | (2258) | 4999 | (2268) | 5169 | (2345) |

Transmition Type:

Automatic Manual

FWD RWD 4WD

GVWR Ratings

Front 3650

Rear 3900

Total 6650

Dummy Data

Type: Hybrid II

Mass: 170 lbs

Seat Position: Passenger

Note any damage prior to test: None

Figure 16. Vehicle Dimensions, Test No. MGSWP-1

The longitudinal component of the center of gravity (c.g.) was determined using the measured axle weights. The Suspension Method [16] was used to determine the vertical component of the c.g. for the pickup truck. This method is based on the principle that the c.g. of any freely suspended body is in the vertical plane through the point of suspension. The vehicle was suspended successively in three positions, and the respective planes containing the c.g. were established. The intersection of these planes pinpointed the final c.g. location for the test inertial condition. The location of the final c.g. is shown in Figures 16 and 17. Ballast information and data used to calculate the final location of the c.g. are shown in Appendix B.

Square, black and white-checkered targets were placed on the vehicle to aid in the analysis of the high-speed videos, as shown in Figure 17. Round, checkered targets were placed on the center of gravity on the left-side door, the right-side door, and the roof of the vehicle. The remaining targets were located for reference so that they could be viewed from the high-speed cameras for video analysis.

The front wheels of the test vehicle were aligned for camber, caster, and toe-in values of zero so that the vehicle would track properly along the guide cable. A 5B flash bulb was mounted under the right-side windshield wiper and was fired by a pressure tape switch mounted at the impact corner of the bumper. The flash bulb was fired upon initial impact with the test article to create a visual indicator of the precise time of impact on the high-speed videos. A remote controlled brake system was installed in the test vehicle so the vehicle could be brought safely to a stop after the test.

### 4.4 Simulated Occupant

For test no MGSWP-1, A Hybrid II 50$^{th}$ Percentile Adult Male Dummy, equipped with clothing and footwear, was placed in the right-front seat of the test vehicle with the seat belt

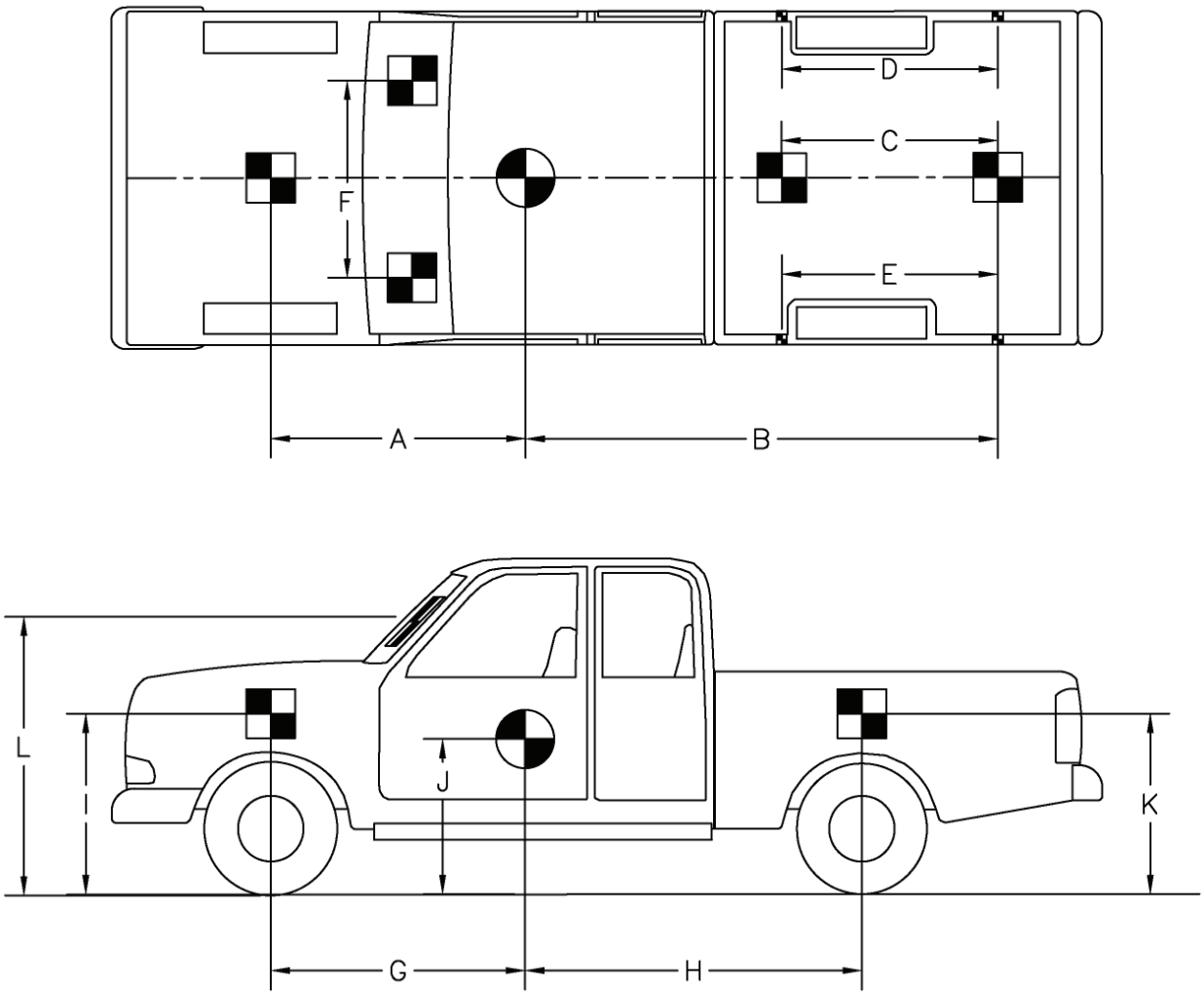


**TEST #: MGSWP-1**

**TARGET GEOMETRY-- in. (mm)**

| | | | | | | | | |
|---|---|---|---|---|---|---|---|---|
| **A** | **75** | **(1905)** | **E** | **64** | **(1626)** | **I** | **39** | **(991)** |
| **B** | **102.875** | **(2613)** | **F** | **43** | **(1092)** | **J** | **28** | **(711)** |
| **C** | **48** | **(1219)** | **G** | **63.25** | **(1607)** | **K** | **42.25** | **(1073)** |
| **D** | **64** | **(1626)** | **H** | **77.25** | **(1962)** | **L** | **59.75** | **(1518)** |

Figure 17. Target Geometry, Test No. MGSWP-1

fastened. The dummy, which had a final weight of 170 lb (77 kg), was represented by model no. 572, serial no. 451, and was manufactured by Android Systems of Carson, California. As recommended by MASH, the dummy was not included in calculating the c.g location.

## 4.5 Data Acquisition Systems

### 4.5.1 Accelerometers

Two environmental shock and vibration sensor/recorder systems were used to measure the accelerations in the longitudinal, lateral, and vertical directions. All of the accelerometers were mounted near the center of gravity of the test vehicle.

The first accelerometer system was a two-arm piezoresistive accelerometer system manufactured by Endevco of San Juan Capistrano, California. Three accelerometers were used to measure each of the longitudinal, lateral, and vertical accelerations independently at a sample rate of 10,000 Hz. Two additional accelerometers were used to measure longitudinal and lateral accelerations independently at the same sample rate. The accelerometers were configured and controlled using a system developed and manufactured by Diversified Technical Systems, Inc. (DTS) of Seal Beach, California. More specifically, data was collected using a DTS Sensor Input Module (SIM), Model TDAS3-SIM-16M. The SIM was configured with 16 MB SRAM memory and 8 sensor input channels with 250 kB SRAM/channel. The SIM was mounted on a TDAS3-R4 module rack. The module rack was configured with isolated power/event/communications, 10BaseT Ethernet and RS232 communication, and an internal backup battery. Both the SIM and module rack were crashworthy. The “DTS TDAS Control” computer software program and a customized Microsoft Excel worksheet were used to analyze and plot the accelerometer data.

The second system, Model EDR-3, was a triaxial piezoresistive accelerometer system manufactured by IST of Okemos, Michigan. The EDR-3 was configured with 256 kB of RAM memory, a range of ±200 g’s, a sample rate of 3,200 Hz, and a 1,120 Hz low-pass filter. The

"DynaMax 1 (DM-1)" computer software program and a customized Microsoft Excel worksheet were used to analyzed and plot the accelerometer data.

### 4.5.2 Rate Transducers

An angular rate sensor, the ARS-1500, with a range of 1,500 degrees/sec in each of the three directions (roll, pitch, and yaw) was used to measure the rates of rotation of the test vehicle. The angular rate sensor was mounted on an aluminum block inside the test vehicle near the center of gravity and recorded data at 10,000 Hz to the SIM. The raw data measurements were then downloaded, converted to the proper Euler angles for analysis, and plotted. The "DTS TDAS Control" computer software program and a customized Microsoft Excel worksheet were used to analyze and plot the angular rate sensor data.

### 4.5.3 Pressure Tape Switches

For test no. MGSWP-1, five pressure-activated tape switches, spaced at approximately 6.56 ft (2 m) intervals, were used to determine the speed of the vehicle before impact. Each tape switch sent an electronic timing signal to the data acquisition system as the right-front tire of the test vehicle passed over it. The test vehicle speed was determined from electronic timing mark data recorded using TestPoint and LabVIEW computer software programs. Strobe lights and high-speed video analysis are used only as a backup in the event that vehicle speed cannot be determined from the electronic data.

### 4.5.4 Digital Cameras

Two AOS VITcam high-speed digital video cameras, three AOS X-PRI high-speed digital video cameras, four JVC digital video cameras, one high-definition JVC digital video camera, and two Canon digital video cameras were utilized to film test no. MGSWP-1. Camera details, camera operating speeds, lens information, and a schematic of the camera locations relative to the system are shown in Figure 18. The high-speed digital videos were analyzed using

the ImageExpress MotionPlus and RedLake MotionScope software programs. Actual camera speed and camera divergence factors were considered in the analysis of the high-speed digital videos. A Nikon D50 digital still camera was also used to document pre-test and post-test conditions for the test.

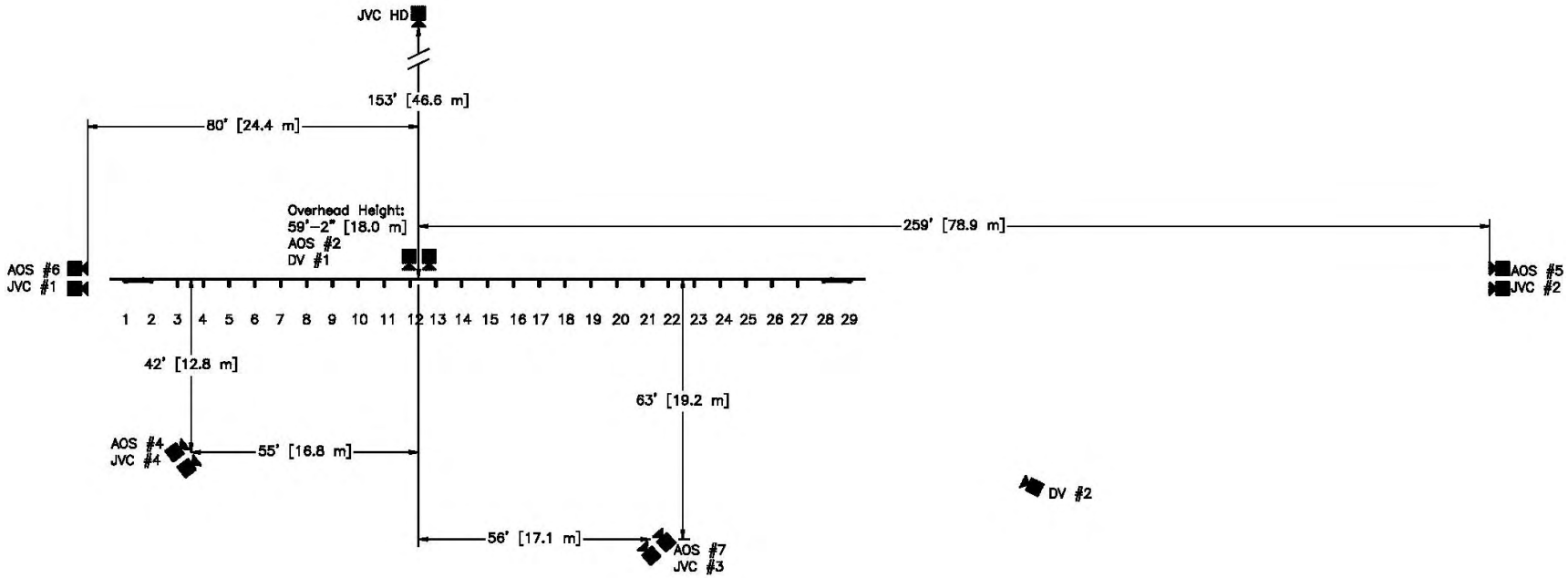


| | No. | Type | Operating Speed (frames/sec) | Lens | Lens Setting |
|---|---|---|---|---|---|
| High-Speed Video | 2 | AOS Vitcam CTM | 500 | Cosmicar 12.5mm fixed | - - |
| | 4 | AOS Vitcam CTM | 500 | Sigma 24-70 | 35 |
| | 5 | AOS X-PRI Gigabit | 500 | Sigma 24-135 | 100 |
| | 6 | AOS X-PRI Gigabit | 500 | Fujinon 50mm Fixed | - - |
| | 7 | AOS X-PRI Gigabit | 500 | Sigma 50mm Fixed | - - |
| Digital Video | 1 | JVC – GZ-MC500 (Everio) | 29.97 | | |
| | 2 | JVC – GZ-MG27u (Everio) | 29.97 | | |
| | 3 | JVC – GZ-MG27u (Everio) | 29.97 | | |
| | 4 | JVC – GZ-MG27u (Everio) | 29.97 | | |
| | HD | JVC – G2-HM320u (Everio) | 29.97 | | |
| | 1 | Canon ZR90 | 29.97 | | |
| | 2 | Canon ZR10 | 29.97 | | |

Figure 18. Camera Locations, Speeds, and Lens Settings, Test No. MGSWP-1

# 5 FULL SCALE CRASH TEST NO. MGSWP-1

## 5.1 Static Soil Test

Before full-scale test no. MGSWP-1 was conducted, the strength of the foundation soil was evaluated with a static test, as described in MASH. The static test results, as shown in Appendix C, demonstrated a soil resistance above the baseline test limits. Thus, the soil provided adequate strength, and full-scale crash testing could be conducted on the barrier system.

## 5.2 Test No. MGSWP-1

The 5,169-lb (2,345-kg) pickup truck impacted the MGS configured with WP wood posts at a speed of 63.8 mph (102.7 km/h) and at an angle of 25.6 degrees. A summary of the test results and sequential photographs are shown in Figure 19. Additional sequential photographs are shown in Figures 20 through 23. Documentary photographs of the crash test are shown in Figures 24 through 26.

## 5.3 Weather Conditions

Test no. MGSWP-1 was conducted on April 2, 2010 at approximately 1:25 pm. The weather conditions as per the National Oceanic and Atmospheric Administration (station 14939/LNK) were reported as shown in Table 3.

Table 3. Weather Conditions, Test No. MGSWP-1

| | |
|---|---|
| Temperature | 63° F |
| Humidity | 31% |
| Wind Speed | 20 mph |
| Wind Direction | 250° from True North |
| Sky Conditions | Sunny |
| Visibility | 10 Statute Miles |
| Pavement Surface | Dry |
| Previous 3-Day Precipitation | 0.00 in. |
| Previous 7-Day Precipitation | 0.58 in. |

### 5.4 Test Description

Initial vehicle impact was to occur 13 ft – 6 in. (4.1 m) upstream of the centerline of the splice between post nos. 14 and 15, as shown in Figure 27, which was selected using the critical impact point (CIP) plots found in Section 2.3 of MASH. The actual point of impact was 1½ in. (38 mm) downstream of the intended impact point. A sequential description of the impact events is contained in Table 4. The vehicle came to rest located 142 ft – 5 in. (43.4 m) downstream from impact and 53 ft – 11 in. (16.4 m) laterally behind the traffic-side face of the rail. The vehicle trajectory and final position are shown in Figures 19 and 28.

Table 4. Sequential Description of Impact Events, Test No. MGSWP-1

| TIME (sec) | EVENT |
|---|---|
| 0.000 | The right-front corner of the vehicle impacted the traffic-side face of the guardrail 1½ in. (38 mm) downstream of the intended impact location. |
| 0.006 | Post nos. 12 and 13 deflected laterally backward, and the rail flattened at the impact location. |
| 0.018 | The posts upstream of impact rotated downstream. |
| 0.030 | A buckle point formed in the top of the rail upstream of post no. 14. |
| 0.034 | Post nos. 11 and 14 deflected laterally backward. |
| 0.048 | The vehicle began to redirect. |
| 0.058 | A buckle point formed in the top of the rail upstream of post no. 15 as post no. 15 deflected laterally backward. |
| 0.088 | A buckle point formed in the top of the rail downstream of post no. 15. |
| 0.102 | Post no. 16 deflected laterally backward. |
| 0.106 | Post no. 14 fractured at groundline, and the rail disengaged from post no. 14 due to bolt pullout. |
| 0.110 | Post no. 17 deflected laterally backward. |
| 0.136 | The right-front tire contacted debris from post no. 14. |
| 0.146 | The right-front tire ruptured. Post no. 11 split along the strong axis and the downstream half fractured at groundline. |
| 0.158 | The rail disengaged from post nos. 9 and 10 due to bolt pullout. |
| 0.178 | The rail disengaged from post no. 8 due to bolt pullout. |
| 0.184 | The vehicle pitched downward. |

| | |
|---|---|
| 0.200 | Post no. 12 split along the strong axis, and the downstream half fractured at groundline. |
| 0.220 | Post no. 15 fractured at groundline. |
| 0.228 | Post no. 10 deflected laterally backward. |
| 0.266 | The left-rear tire became airborne. |
| 0.282 | Post no. 18 deflected laterally backward. |
| 0.300 | The vehicle became parallel to the system with a velocity of 44.6 mph (71.8 km/h). |
| 0.324 | The right-front tire contacted the front face of post no. 16, and the vehicle pitched upward. |
| 0.336 | The rail disengaged from post no. 16 due to bolt pullout. |
| 0.352 | The right-front tire disengaged from the vehicle. |
| 0.478 | The left-rear tire contacted the ground. |
| 0.524 | The vehicle pitched downward. |
| 0.618 | The vehicle exited the system at a speed of 39.6 mph (63.7 km/h) and at an angle of 16.6 degrees as the right-rear quarter panel lost contact with the rail at post no. 17. |
| 0.938 | The right side of the front axle contacted the ground. |
| 1.020 | The right side of the front axle lost contact with the ground. |
| 1.724 | The right side of the front axle contacted the ground again. |

### 5.5 Barrier Damage

Damage to the barrier was moderate, as shown in Figures 29 through 37. Barrier damage consisted of deformed W-beam rail, contact marks on sections of guardrail and posts, and fractured wood posts. The length of vehicle contact along the barrier was approximately 30 ft – 6 in. (9.3 m) which spanned from 13 ft – 4½ in. (4.1 m) upstream of the centerline of the splice between post nos. 14 and 15 to 15¾ in. (400 mm) downstream of the centerline of post no. 17.

Contact marks were visible on the W-beam guardrail beginning at the splice between post nos. 12 and 13 and ending at the splice between post nos. 14 and 15. Deformation and flattening of the W-beam guardrail occurred between post nos. 12 and 16. Buckling occurred 35 in. (889 mm) downstream of the centerline of post no. 11, 6 in. (152 mm) downstream of the centerline of post no. 12, and at post nos. 16 and 17. Folding of the W-beam's bottom corrugation occurred at post nos. 13 through 15 and between post nos. 14 and 15. A 1-in. (25-mm) tear occurred at the

bottom of the post bolt slot at post no. 15, and local yielding occurred around the post bolt slots at post nos. 8 through 17. The w-beam guardrail was detached from post nos. 8 through 10 and 14 through 17 as the bolt head was pulled through the rail. Minor rail gaps occurred at the splices between post nos. 4 and 5, 12 through 17, and 22 and 23.

Post nos. 3, 10 through 13, and 16 through 18 deflected laterally backward. Post nos. 3 and 16 also rotated downstream. Post nos. 4 through 7 deflected longitudinally downstream. Post nos. 11 and 12 split along the strong axis, and the downstream half of each post fractured at groundline. Post nos. 14 and 15 fractured at groundline. A 2½-in. (64-mm) and a 1¼-in. (32-mm) long gouge were found on the front upstream edge and on the front face of post no. 16, respectively. The blockout at post nos. 11, 12, and 14 detached

A 1½-in. (38-mm) soil gap was present at the upstream face of post no. 1. A ⅜-in. (10-mm) soil gap was present at the downstream face of post no. 2 and upstream side of post no. 6. A ¾-in. (19-mm) soil gap was present at the upstream face of post no. 3 and front face of post no. 10. A ½-in. (13-mm) soil gap was present at the upstream face of post nos. 4 and 5. A ⅛-in. (3-mm) soil gap was present at the back face of post nos. 5 through 7 and the upstream face of post no. 7. A 1⅝-in. (41-mm) soil gap was present at the front face of post no. 12. A 3-in. (76-mm) soil gap was present at the downstream and back faces of post no. 13 and an 11-in. (279-mm) soil gap was present at the front face. A ⅞-in. soil gap was present at the front face of post no. 14. An 8-in. wide x 4½-in. long (203-mm x 114-mm) soil crater was present at the front-upstream corner of post no. 16. Soil gaps measuring 5 in. (127 mm) and ¼ in. (6 mm) were present at the front and back faces of post no. 17, respectively. A 1-in. (25-mm) soil gap was present at the front face of post no. 18.

The maximum lateral permanent set rail and post deflections were 33¾ in. (857 mm) at the midpoint between post nos. 14 and 15 and 28¾ in. (730 mm) at post no. 16, respectively, as

measured at the test site. The maximum lateral dynamic rail and post deflections were 46.3 in. (1,176 mm) at the midpoint between post nos. 14 and 15 and 34.6 in. (879 mm) at post no. 16, respectively, as determined from high-speed digital video analysis. The working width of the system was 58.4 in. (1,483 mm), also determined from high-speed digital video analysis.

### 5.6 Vehicle Damage

The damage to the vehicle was moderate, as shown in Figures 38 through Figure 41. The maximum occupant compartment deformations are listed in Table 5 along with the deformation limits established in MASH for various areas of the occupant compartment. Note that none of the MASH established deformation limits were violated. Complete occupant compartment and vehicle deformations and the corresponding locations are provided in Appendix D.

Table 5. Maximum Occupant Compartment Deformations by Location

| LOCATION | MAXIMUM DEFORMATION in. (mm) | MASH ALLOWABLE DEFORMATION in. (mm) |
|---|---|---|
| Wheel Well & Toe Pan | ¼ (6) | ≤ 9 (229) |
| Floor Pan & Transmission Tunnel | ¼ (6) | ≤ 12 (305) |
| Side Front Panel (in Front of A-Pillar) | ¼ (6) | ≤ 12 (305) |
| Side Door (Above Seat) | ½ (13) | ≤ 9 (229) |
| Side Door (Below Seat) | 1 (25) | ≤ 12 (305) |
| Roof | NA | ≤ 4 (102) |
| Windshield | NA | ≤ 3 (76) |

The majority of the damage was concentrated on the right-front corner and right side of the vehicle. The right side of the front bumper had contact marks and was deformed inward toward the engine compartment. The right headlight and fog lamp were disengaged from the vehicle. The right-front tire was detached from the vehicle, and the right-front wheel well was deformed and scraped. The right-front upper control arm and brake line were disengaged from

the vehicle. The right-front lower control arm and the upper wheel mount fractured. Deformations and contact marks extended across the entire right side of the vehicle as well as on the right-rear shocks. The lower-front corner of the right-front door and the lower-front corner of the right-side box were deformed inward. The right-side taillight was dislodged from the vehicle but still attached. All window glass remained undamaged. Following impact and exiting the system, the vehicle contacted a soil pile, causing damage to the left side of the vehicle.

### 5.7 Occupant Risk

The calculated occupant impact velocities (OIVs) and maximum 0.010-sec occupant ridedown accelerations (ORAs) in both the longitudinal and lateral directions are shown in Table 6. Note that the OIVs and ORAs were within the suggested limits provided in MASH. The calculated THIV, PHD, and ASI values are also shown in Table 6. The results of the occupant risk analysis, as determined from the accelerometer data, are summarized in Figure 19. The recorded data from the accelerometers and the rate transducers are shown graphically in Appendix E.

Table 6. Summary of OIV, ORA, THIV, PHD, and ASI Values, Test No. MGSWP-1

| **Evaluation Criteria** | | **Transducer** | | | **MASH Limits** |
|---|---|---|---|---|---|
| | | **EDR-3** | **DTS Set 1** | **DTS Set 2** | |
| **OIV ft/s (m/s)** | Longitudinal | -15.38 (-4.69) | -15.27 (-4.65) | -15.75 (-4.80) | ≤ 40 (12.2) |
| | Lateral | -14.95 (-4.56) | -16.14 (-4.92) | -15.91 (-4.85) | ≤40 (12.2) |
| **ORA g's** | Longitudinal | -8.08 | -8.25 | -8.25 | ≤ 20.49 |
| | Lateral | -9.32 | -10.13 | -9.86 | ≤ 20.49 |
| **THIV ft/s (m/s)** | | NA | 21.23 (6.47) | NA | not required |
| **PHD g's** | | NA | 12.36 | NA | not required |
| **ASI** | | 0.69 | 0.77 | NA | not required |

### 5.1 Discussion

The analysis of the test results for test no. MGSWP-1 showed that the MGS with white pine wood posts adequately contained and redirected the 2270P vehicle with controlled lateral displacements of the barrier. There were no detached elements nor fragments which showed potential for penetrating the occupant compartment nor presented undue hazard to other traffic. Deformations of, or intrusions into, the occupant compartment that could have caused serious injury did not occur. The test vehicle did not penetrate nor ride over the barrier and remained upright during and after the collision. Vehicle roll, pitch, and yaw angular displacements, as shown in Appendix E, were deemed acceptable because they did not adversely influence occupant risk safety criteria nor cause rollover. After impact, the vehicle exited the barrier at an angle of 16.6 degrees and its trajectory did not violate the bounds of the exit box. Therefore, test no. MGSWP-1 conducted on the MGS with white pine wood posts was determined to be acceptable according to the MASH safety performance criteria for test designation no. 3-11.

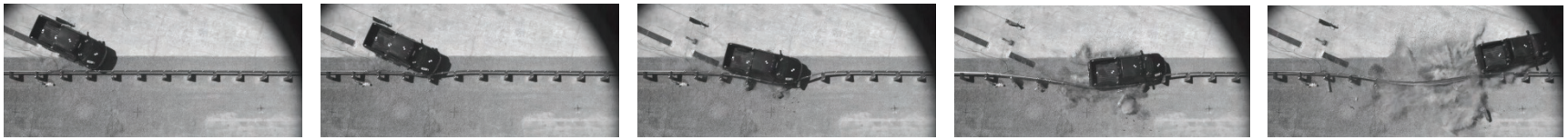

0.000 sec | 0.048 sec | 0.178 sec | 0.356 sec | 0.682 sec

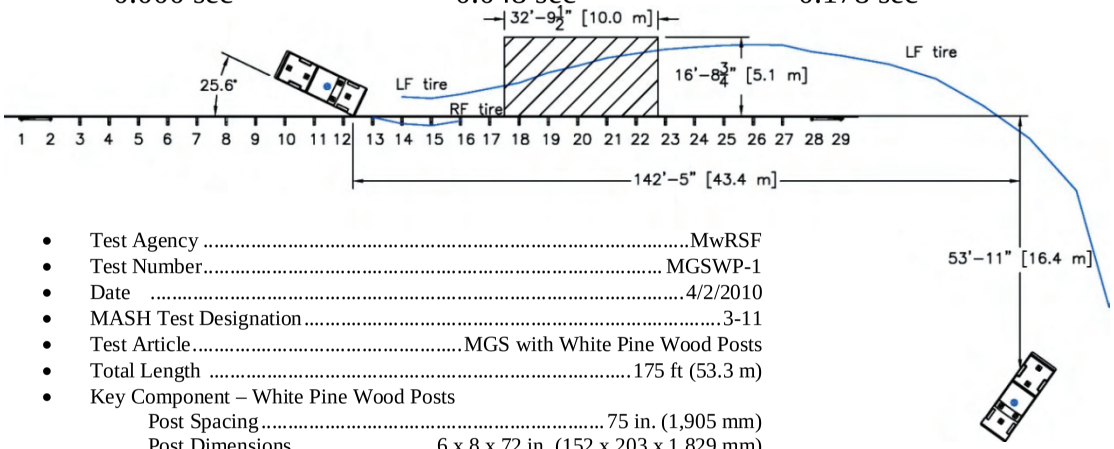


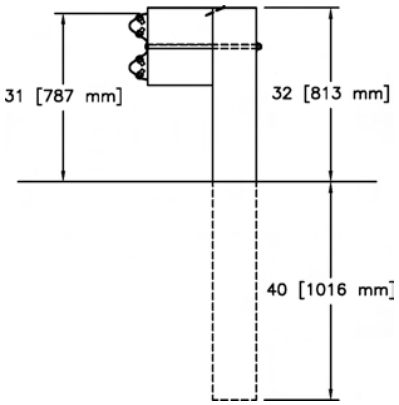


- Test Agency ..... MwRSF
- Test Number ..... MGSWP-1
- Date ..... 4/2/2010
- MASH Test Designation ..... 3-11
- Test Article ..... MGS with White Pine Wood Posts
- Total Length ..... 175 ft (53.3 m)
- Key Component – White Pine Wood Posts
  - Post Spacing ..... 75 in. (1,905 mm)
  - Post Dimensions ..... 6 x 8 x 72 in. (152 x 203 x 1,829 mm)
- Key Component – Wood Spacer Blocks
  - Blockout Dimensions ..... 6 x 12 x 14¼ in. (152 x 305 x 362 mm)
- Key Component – Steel MGS Rail
  - Thickness ..... 12 gauge (2.66 mm)
  - Top Mounting Height ..... 31 in. (787 mm)
- Soil Type ..... Grading B of AASHTO M147-65 (1990)
- Vehicle Make /Model ..... 2003 Dodge Ram 1500 Quad Cab
  - Curb ..... 4,979 lb (2,258 kg)
  - Test Inertial ..... 4,999 lb (2,268 kg)
  - Gross Static ..... 5,169 lb (2,345 kg)
- Impact Conditions
  - Speed ..... 63.8 mph (102.7 km/h)
  - Angle ..... 25.6 deg
  - Location..... 13 ft – 4½ in. (4.1 m) US of splice between posts 14 and 15
- Exit Conditions
  - Speed ..... 39.6 mph (63.7 km/h)
  - Angle ..... 16.6 deg
- Exit Box Criterion ..... Pass
- Vehicle Stability ..... Satisfactory
- Vehicle Stopping Distance ..... 142 ft – 5 in. (43.4 m) downstream
  53 ft – 11 in. (16.4 m) laterally behind
- Vehicle Damage ..... Moderate
  - VDS[17] ..... 01-RFQ-4
  - CDC[18] ..... 01-RYEN-3
  - Maximum Interior Deformation ..... 1 in. (25 mm), door below seat
- Test Article Damage ..... Moderate

- Test Article Deflections
  - Permanent Set ..... 33¾ in. (857 mm)
  - Dynamic ..... 46.3 in. (1,176 mm)
  - Working Width ..... 58.4 in. (1,483 mm)
- Maximum Angular Displacements
  - Roll ..... 7 < 75
  - Pitch ..... -3 < 75
  - Yaw ..... 78
- Impact Severity (IS) ..... 131.5 kip-ft (178.3 kJ) > 106 kip-ft (144 kJ)
- Transducer Data

| Evaluation Criteria | | Transducer | | | MASH Limit |
|---|---|---|---|---|---|
| | | EDR-3 | DTS Set 1 | DTS Set 2 | |
| OIV ft/s (m/s) | Longitudinal | -15.38 (-4.69) | -15.27 (-4.65) | -15.75 (-4.80) | ≤ 40 (12.2) |
| | Lateral | -14.95 (-4.56) | -16.14 (-4.92) | -15.91 (-4.85) | ≤ 40 (12.2) |
| ORA g's | Longitudinal | -8.08 | -8.25 | -8.25 | ≤ 20.49 |
| | Lateral | -9.32 | -10.13 | -9.86 | ≤ 20.49 |
| THIV – ft/s (m/s) | | NA | 21.23 (6.47) | NA | not required |
| PHD – g's | | NA | 12.36 | NA | not required |
| ASI | | 0.69 | 0.77 | NA | not required |

Figure 19. Summary of Test Results and Sequential Photographs, Test No. MGSWP-1

0.000 sec

0.182 sec

0.038 sec

0.270 sec

0.106 sec

0.352 sec

0.146 sec

0.434 sec

Figure 20. Additional Sequential Photographs, Test No. MGSWP-1

0.000 sec

0.034 sec

0.102 sec

0.146 sec

0.200 sec

0.264 sec

0.360 sec

0.434 sec

0.506 sec

0.618 sec

Figure 21. Additional Sequential Photographs, Test No. MGSWP-1

0.000 sec

0.104 sec

0.184 sec

0.264 sec

0.454 sec

0.672 sec

0.804 sec

1.004 sec

1.404 sec

2.404 sec

Figure 22. Additional Sequential Photographs, Test No. MGSWP-1

0.000 sec

0.048 sec

0.092 sec

0.228 sec

0.352 sec

0.478 sec

0.740 sec

1.044 sec

1.512 sec

2.852 sec

Figure 23. Additional Sequential Photographs, Test No. MGSWP-1

Figure 24. Documentary Photographs, Test No. MGSWP-1

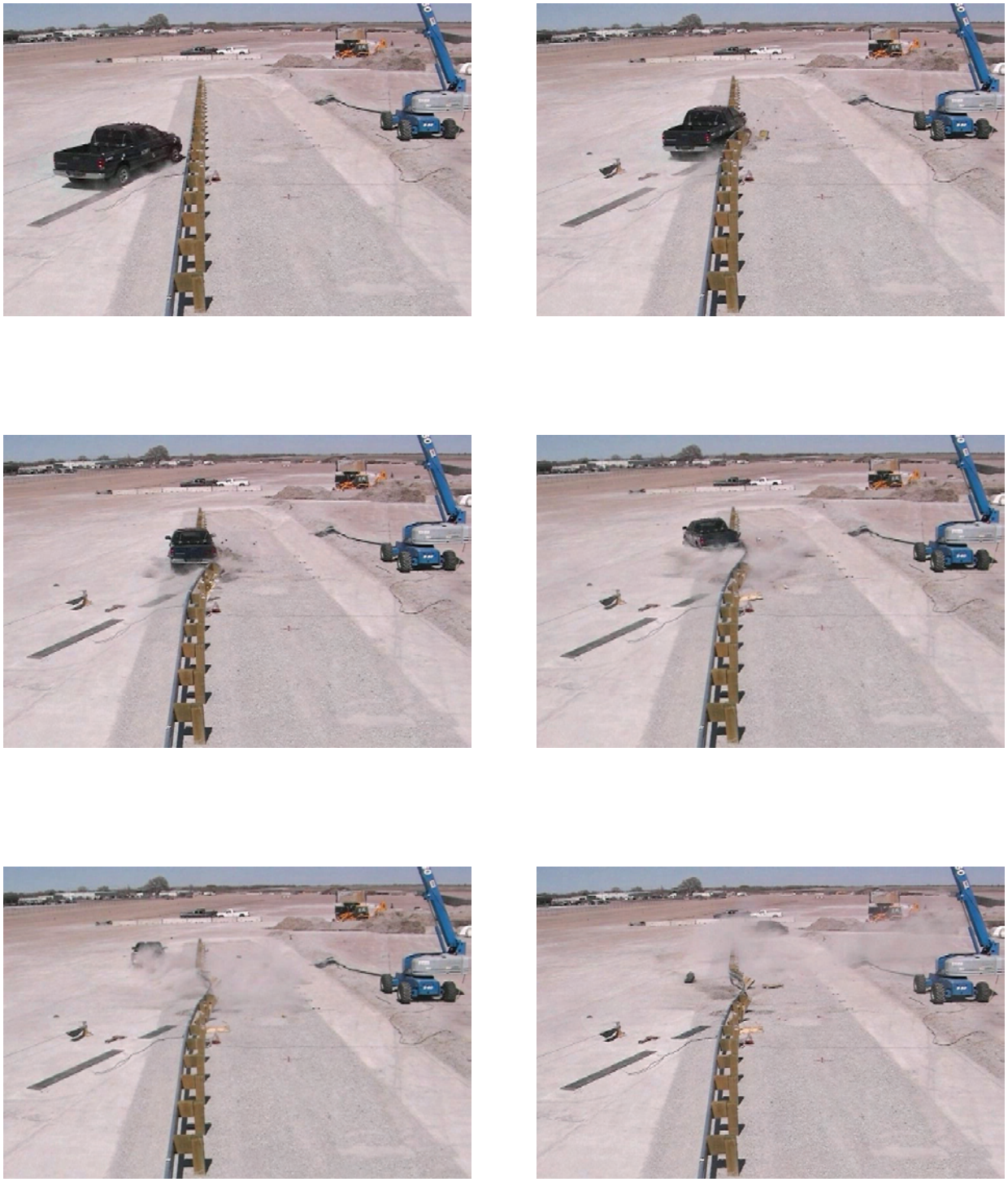

Figure 25. Documentary Photographs, Test No. MGSWP-1

Figure 26. Documentary Photographs, Test No. MGSWP-1

Figure 27. Impact Location, Test No. MGSWP-1

Figure 28. Vehicle Final Position and Trajectory Marks, Test No. MGSWP-1

Figure 29. System Damage, Test No. MGSWP-1

Figure 30. System Damage, Test No. MGSWP-1

Figure 31. System Damage, Test No. MGSWP-1

Figure 32. System Damage, Test No. MGSWP-1

Figure 33. Post Nos. 8 through 10 Damage, Test No. MGSWP-1

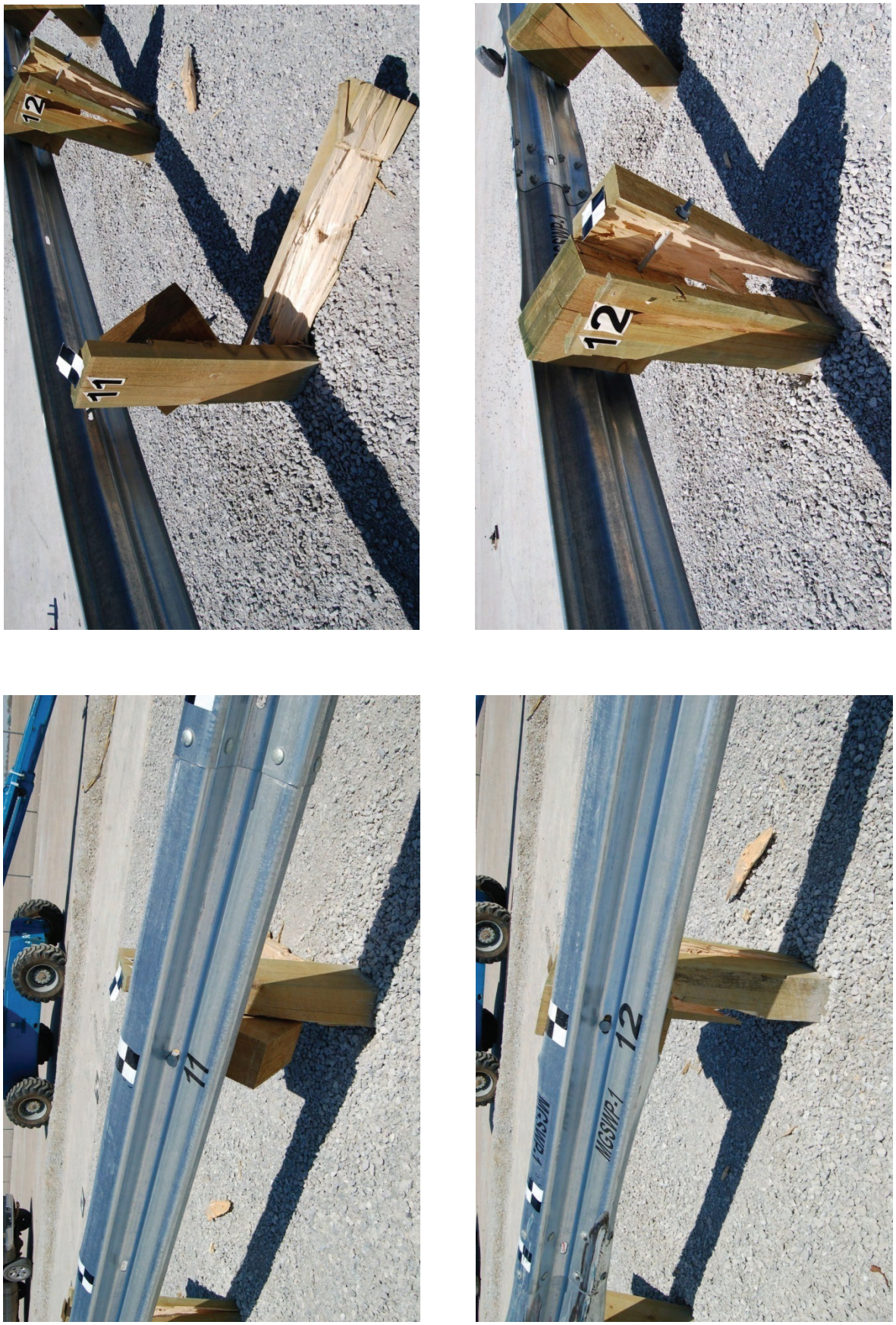


Figure 34. Post Nos. 11 and 12 Damage, Test No. MGSWP-1

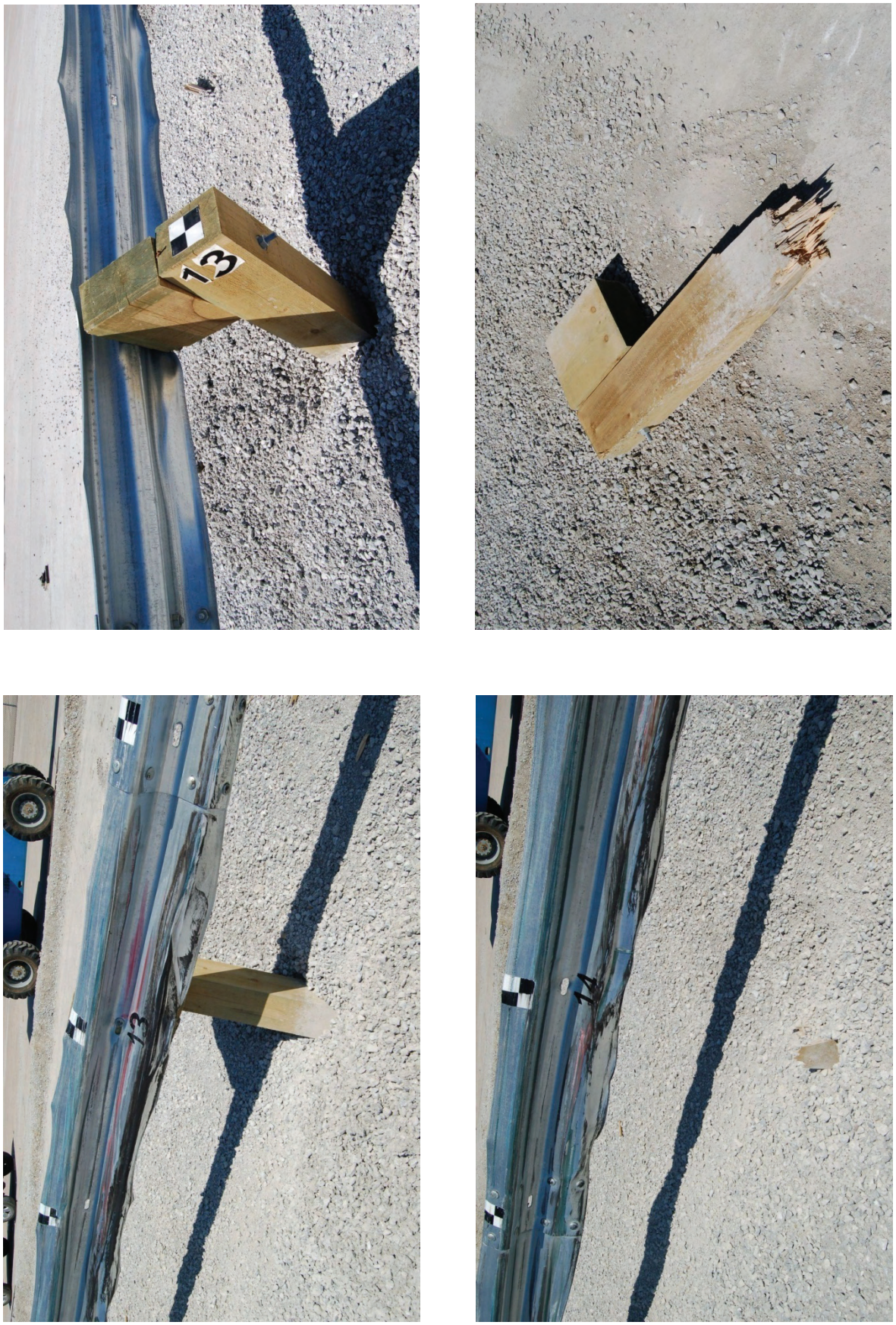


Figure 35. Post Nos. 13 and 14 Damage, Test No. MGSWP-1

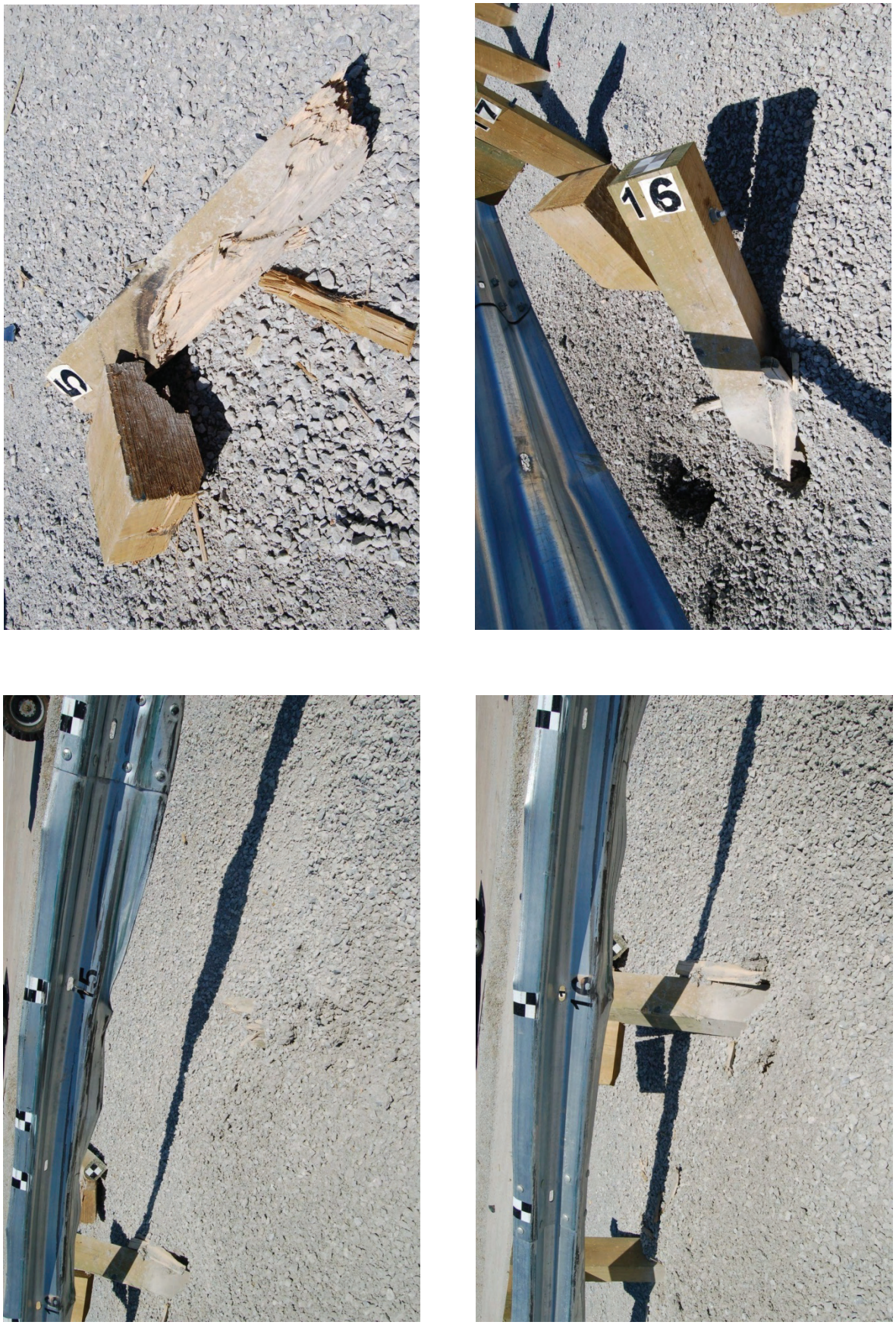


Figure 36. Post Nos. 15 and 16 Damage, Test No. MGSWP-1

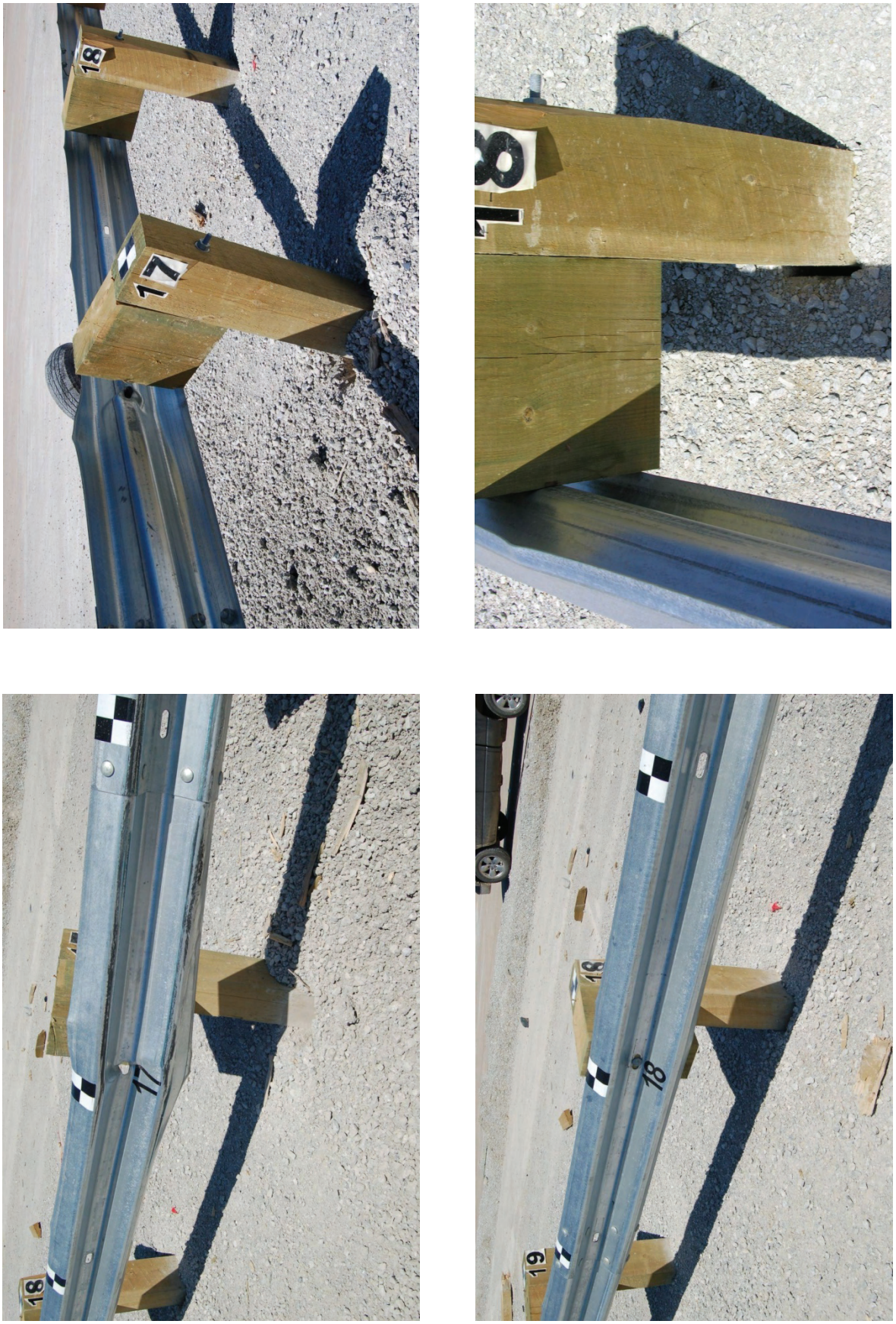


Figure 37. Post Nos. 17 and 18 Damage, Test No. MGSWP-1

Figure 38. Vehicle Damage, Test No. MGSWP-1

Figure 39. Vehicle Damage, Test No. MGSWP-1

Figure 40. Vehicle Undercarriage Damage, Test No. MGSWP-1

Figure 41. Occupant Compartment Damage, Test No. MGSWP-1

# 6 SUMMARY, CONCLUSIONS, AND RECOMMENDATIONS

The MGS was constructed with standard 6-in. x 8-in. (152-mm x 203-mm), white pine (WP) wood posts and subsequently evaluated with a full-scale crash testing program. One full-scale crash test was performed according to the TL-3 safety performance criteria, as defined in MASH. Test no. MGSWP-1 (test designation no. 3-11) consisted of a 5,169-lb (2,345-kg) pickup truck impacting the MGS with WP wood posts at a speed of 63.8 mph (102.7 km/h) and at an angle of 25.6 degrees, resulting in an impact severity of 131.5 kip-ft (178.3 kJ). The vehicle was contained and smoothly redirected. Thus, the MGS with white pine wood posts was judged to be acceptable according to the safety performance criteria presented in MASH. A summary of the safety performance evaluation is provided in Table 7.

The standard MGS has demonstrated acceptable safety performance when configured with either standard W6x9 (W152x13.4) steel posts [5-7], round wood posts [19-20], and now with 6-in. x 8-in. (152-mm x 203-mm) white pine wood posts. The different configurations have exhibited similar performance, as shown in Table 8. Therefore, the MGS configured with standard-sized, white pine posts is an acceptable alternative to the previously-recommended, large-size, white pine wood post due to the successful crash test. The WP posts used herein were selected to meet specific wood post grading criteria, as specified by the Wisconsin Department of Transportation. Thus, standard WP line posts can be used within the MGS system when configured to meet the minimum grading requirements specified in Appendix A.

Wood posts are often utilized in longitudinal barrier systems that are configured for special applications, such as in stiffness transitions, barriers adjacent to steep slopes, or barriers to shield the ends of transverse culverts. Within these special barrier applications, the dynamic behavior of an embedded post can greatly affect its safety performance. For example, premature fracture of wood posts within an approach guardrail transition may lead to an increased

propensity for vehicle pocketing and/or snag on a bridge end. As such, MwRSF researchers have concerns regarding degraded barrier performance when considering the use of the weaker, 6-in. x 8-in. (152-mm x 203-mm), white pine wood posts in lieu of standard, SYP or DF rectangular wood posts in stiffness transitions and special MGS applications. However, it is possible for white pine posts to be used within approach guardrail transitions, guardrail end terminals, or guardrail anchorage systems. First, the geometry (i.e., width, depth, and length) of white pine posts could be modified to provide equivalent stiffness and strength to that provided by the original SYP or DF wood posts. Second, the post spacing could be modified to provide equivalent barrier capacity and energy dissipation characteristics to that provided by the original SYP or DF wood posts. Finally, full-scale vehicle crash testing may be used to demonstrate that unmodified, standard-size white pine posts provide acceptable barrier performance when used in combination with stiffness transitions or other special MGS applications.

As noted previously, W-beam guardrail systems have been developed for use in shielding various roadside hazards, such as fill slopes equal to or greater than 2H:1V and transverse culvert openings. Previously and based on full-scale crash testing, the Midwest Guardrail System (MGS) was successfully adapted for use at the slope break point of a 2H:1V fill slope using 9-ft (2,743-mm) long, W6x9 (W152x13.4) steel posts spaced on 6 ft - 3 in. (1,905 mm) centers. Later and based on dynamic component testing, a wood post version of the MGS system was configured with 7.5 ft (2,286-mm) long, SYP posts and for use in shielding a 2:1 fill slope. For the SYP wood post variation, the embedment depth was 58 in. (1,473 mm).

Unfortunately, WP posts would likely fracture prior to rotating in soil when installed with a 58-in. (1,473-mm) embedment depth on a 2H:1V fill slope, thus resulting in reduced energy absorption, increased system deflections, and a greater propensity for vehicle instabilities. As such, the post geometry would need to be altered in order to mitigate concerns for post fracture.

For example, the post length and associated embedment depth could be decreased to reduce the post-soil resistance. Alternatively, the post's cross section could be modified to provide increased capacity and greater resistance to post fracture when using a 58-in. embedment depth. Further, full-scale crash testing could be used to demonstrate that the MGS with white pine posts would perform in an acceptable manner even with the fracture of a greater number of wood posts.

Based on the desire to maintain a standard cross section for 2H:1V fill slope applications, a reduction in post length was deemed more desirable. Unfortunately, a decreased embedment depth would result in a reduction in the lateral stiffness and strength of the MGS. Thus, the post spacing would likely need to be reduced to provide comparable barrier capacity and energy dissipation characteristics to that provided by the steel post and SYP wood post variations of the MGS for use on 2H:1V fill slopes. Further analysis, as shown in Appendix F, revealed that a white pine MGS system located adjacent to a 2H:1V fill slope should utilize 6.5-ft (1,981-mm) long, 6-in. x 8-in. (152-mm x 203-mm) wood posts at half-post spacing, or on 37½ in. (953 mm) centers. All other features of standard MGS remain the same.

The MGS has been adapted for use in another special application, more specifically in the safety treatment of transverse culvert openings. The long-span MGS utilizes SYP CRT posts on both sides of the 25-ft (7.62-m) long unsupported length. Originally, CRT posts were designed with a 3.5-in. (89-mm) diameter hole placed through the wide face of the post to reduce the weak-axis bending strength while maintaining a relatively high strength about the strong-axis of bending. Similar to the 2H:1V fill slope application, MwRSF researchers have concerns regarding the substitution of standard-size WP posts for the standard-size SYP CRT posts due to the significant strength reductions in both principal directions and premature post fracture. In the MGS long-span application, premature CRT post fracture could result in increased barrier

deflections, a greater propensity for vehicle instabilities, increased vehicle snag on the downstream wingwall, as well as the potential for the vehicle to override the barrier and/or travel over the culvert edge. As such, the post geometry would need to be altered in order to mitigate concerns for post fracture. For example, the post's cross section could be modified to provide increased capacity and greater resistance to post fracture. Second, the CRT post spacing could be reduced from 6 ft - 3 in. (1,905 mm) centers to 3 ft – 1½-in. (952 mm) centers. In addition, full-scale crash testing could also be used to demonstrate that the MGS with white pine posts would perform in an acceptable manner even with premature fracture of the CRT posts.

Based on the desire to maintain the standard 6-ft 3-in. (1,905-mm) post spacing for the three CRT posts installed adjacent to the unsupported length, it was deemed necessary to increase the post's cross section, more specifically the post depth. Thus, an equivalent WP CRT post was designed, as detailed in Appendix G. The equivalent WP CRT post measures 6 in. (152 mm) wide by 10 in. (254 mm) deep and maintains the 3.5-in. (89-mm) diameter holes through the 10-in. (254-mm) face. The length and hole locations remain unchanged from the original SYP CRT post. In summary, the post capacity and post-soil resistance should be approximately equal for the same length 6-in. (152-mm) x 10-in. (254-mm) WP post and the 6-in. x 8-in. (152-mm x 203-mm) SYP post. Based on this fact, MwRSF researchers believe that the WP MGS long-span system should provide comparable safety performance to the SYP MGS long-span system and not require additional full-scale crash testing.

Table 7. Summary of Safety Performance Evaluation Results

<table>
<tr><th>Evaluation Factors</th><th colspan="4">Evaluation Criteria</th><th>Test No. MGSWP-1</th></tr>
<tr><td>Structural Adequacy</td><td colspan="4">A. Test article should contain and redirect the vehicle or bring the vehicle to a controlled stop; the vehicle should not penetrate, underride, or override the installation although controlled lateral deflection of the test article is acceptable.</td><td>S</td></tr>
<tr><td rowspan="4">Occupant Risk</td><td colspan="4">D. Detached elements, fragments or other debris from the test article should not penetrate or show potential for penetrating the occupant compartment, or present an undue hazard to other traffic, pedestrians, or personnel in a work zone. Deformations of, or intrusions into, the occupant compartment should not exceed limits set forth in Section 5.3 and Appendix E of MASH.</td><td>S</td></tr>
<tr><td colspan="4">F. The vehicle should remain upright during and after collision. The maximum roll and pitch angles are not to exceed 75 degrees.</td><td>S</td></tr>
<tr><td colspan="4">H. Occupant Impact Velocity (OIV) (see Appendix A, Section A5.3 of MASH for calculation procedure) should satisfy the following limits:
<table>
<tr><th colspan="3">Occupant Impact Velocity Limits</th></tr>
<tr><th>Component</th><th>Preferred</th><th>Maximum</th></tr>
<tr><td>Longitudinal and Lateral</td><td>30 ft/s<br>(9.1 m/s)</td><td>40 ft/s<br>(12.2 m/s)</td></tr>
</table></td><td>S</td></tr>
<tr><td colspan="4">I. The Occupant Ridedown Acceleration (ORA) (see Appendix A, Section A5.3 of MASH for calculation procedure) should satisfy the following limits:
<table>
<tr><th colspan="3">Occupant Ridedown Acceleration Limits</th></tr>
<tr><th>Component</th><th>Preferred</th><th>Maximum</th></tr>
<tr><td>Longitudinal and Lateral</td><td>15.0 g’s</td><td>20.49 g’s</td></tr>
</table></td><td>S</td></tr>
</table>

S – Satisfactory U – Unsatisfactory NA - Not Applicable

Table 8. MGS with Steel and Wood Post Comparison

| Performance Criteria | | MGS | | | | |
|---|---|---|---|---|---|---|
| | | **7¼-in. Diameter Douglas Fir Posts** | **8-in. Diameter Ponderosa Pine Posts** | **W6x9 Steel Posts** | **W6x9 Steel Posts** | **6-in. x 8-in. White Pine Posts** |
| **Test Specification** | | 350 | 350 | 350 | MASH | MASH |
| **Impact Severity kip-ft (kJ)** | | 106.4 (144.3) | 107.2 (145.3) | 101.5 (137.7) | 122.3 (165.8) | 131.5 (178.3) |
| **Permanent Set Deflections in. (mm)** | | 35.5 (902) | 27.8 (706) | 26 (652) | 31⅝ (803) | 33¾ (857) |
| **Dynamic Deflections in. (mm)** | | 60.2 (1,529) | 37.6 (955) | 43.1 (1,094) | 43.9 (1,115) | 46.3 (1,176) |
| **Working Width in. (mm)** | | 60.3 (1,532) | 48.6 (1,234) | 49.6 (1,260) | 48.6 (1,234) | 58.4 (1,483) |
| **OIV ft/s (m/s)** | **Longitudinal** | 13.22 (4.03) | 22.47 (6.85) | 18.32 (5.58) | 15.32 (4.67) | -15.27 (-4.65) |
| | **Lateral** | 13.22 (4.03) | 23.56 (7.18) | 12.87 (3.89) | 15.62 (4.76) | -16.14 (-4.92) |
| **ORA g's** | **Longitudinal** | 8.76 | 5.90 | 9.50 | 8.23 | -8.25 |
| | **Lateral** | 5.69 | 4.09 | 6.94 | 6.93 | -10.13 |

# 7 REFERENCES

1. Polivka, K.A., Faller, R.K., Sicking, D.L., Reid, J.D., Rohde, J.R., Holloway, J.C., Bielenberg, R.W., and Kuipers, B.D., *Development of the Midwest Guardrail System (MGS) for* Standard and Reduced Post Spacing and in Combination with Curbs, Transportation Research Report No. TRP-03-139-04, Final Report to the Midwest States' Regional Pooled Fund Program, Project No. SPR-3(017)-Years 10, and 12-13, Project Code: RPFP-00-02, 02-01, and 03-05, Midwest Roadside Safety Facility, University of Nebraska-Lincoln, Lincoln, Nebraska, September 1, 2004.

2. Faller, R.K., Polivka, K.A., Kuipers, B.D., Bielenberg, B.W., Reid, J.D., Rohde, J.R., and Sicking, D.L., *Midwest Guardrail System for Standard and Special Applications*, Transportation Research Record No. 1890, Journal of the Transportation Research Board, TRB AFB20 Committee on Roadside Safety Design, Transportation Research Board, Washington, D.C., January 2004.

3. Sicking, D.L., Reid, J.D., and Rohde, J.R., *Development of the Midwest Guardrail System*, Paper No. 02-3157, Transportation Research Record No. 1797, Journal of the Transportation Research Board, TRB AFB20 Committee on Roadside Safety Design, Transportation Research Board, Washington D.C., 2002.

4. Faller, R.K., Sicking, D.L., Bielenberg, R.W., Rohde, J.R., Polivka, K.A., and Reid, J.D., *Performance of Steel-Post W-Beam Guardrail Systems*, Paper No. 07-2642, Transportation Research Record No. 2025, Journal of the Transportation Research Board, TRB AFB20 Committee on Roadside Safety Design, Transportation Research Board, Washington D.C., January 2007.

5. Polivka, K.A., Faller, R.K., Sicking, D.L., Rohde, J.R., Bielenberg, B.W., and Reid, J.D., *Performance Evaluation of the Midwest Guardrail System - Update to NCHRP 350 Test No. 3-11 (2214MG-1)*, Final Report to the National Cooperative Highway Research Program (NCHRP), Transportation Research Board, Transportation Research Report No. TRP-03-170-06, Midwest Roadside Safety Facility, University of Nebraska-Lincoln, October 10, 2006.

6. Polivka, K.A., Faller, R.K., Sicking, D.L., Rohde, J.R., Bielenberg, B.W., and Reid, J.D., *Performance Evaluation of the Midwest Guardrail System - Update to NCHRP 350 Test No. 3-11 with 28" C.G. Height (2214MG-2)*, Final Report to the National Cooperative Highway Research Program, MwRSF Research Report No. TRP-03-171-06, Midwest Roadside Safety Facility, University of Nebraska-Lincoln, October 11, 2006.

7. Polivka, K.A., Faller, R.K., Sicking, D.L., Rohde, J.R., Bielenberg, B.W., and Reid, J.D., *Performance Evaluation of the Midwest Guardrail System - Update to NCHRP 350 Test No. 3-10 (2214MG-3)*, Final Report to the National Cooperative Highway Research Program, MwRSF Research Report No. TRP-03-172-06, Midwest Roadside Safety Facility, University of Nebraska-Lincoln, October 11, 2006.

8. McGhee, M.D., Faller, R.K., Rohde, J.R., Lechtenberg, K.A., Sicking, D.L., and Reid, J.D., *Development and Evaluation of the Non-Blocked, Midwest Guardrail System (MGS) for Wire-Faced, MSE Walls*, Draft Report, Transportation Report No. TRP-03-234-10, Midwest Roadside Safety Facility, University of Nebraska-Lincoln, November 8, 2010.

9. Stolle, C.S., Polivka, K.A., Reid, J.D., Faller, R.K., Sicking, D.L., Bielenberg, R.W., and Rohde, J.R., *Evaluation of Critical Flare Rates for the Midwest Guardrail System (MGS)*, Final Report to the Midwest States Regional Pooled Fund Program, Transportation Report No. TRP-03-191-08, Project No. SPR-3(017)-Years 14 and 15, Project Code: RPFP-04-03 and RPFP-05-05, Midwest Roadside Safety Facility, University of Nebraska-Lincoln, July 15, 2008.

10. Reid, J.D., Kuipers, B.D., Sicking, D.L., and Faller, R.K., *Impact Performance of W-Beam Guardrail Installed at Various Flare Rates*, International Journal of Impact Engineering, Volume 36, Issue 3, March 2009, pages 476-485.

11. Reid, J.D., Kuipers, B.D., Sicking, D.L., and Faller, R.K., *Guardrail Flare Rates*, Paper No. 07-0517, 86th Annual Meeting of the Transportation Research Board, Washington, D.C., January 2007.

12. Rohde, J.R., Hascall, J.A., Polivka, K.A., Faller, R.K., and Sicking, D.L., *Dynamic Testing of Wooden Guardrail Posts - White and Red Pine Species Equivalency Study*, Final Report to the Midwest States Regional Pooled Fund Program, Transportation Research Report No. TRP-03-154-04, Project No. SPR-3(017)-Year 7, Midwest Roadside Safety Facility, University of Nebraska-Lincoln, September 21, 2004.

13. *Manual for Assessing Safety Hardware (MASH)*, American Association of State Highway and Transportation Officials (AASHTO), Washington, D.C., 2009.

14. Ross, H.E., Sicking, D.L., Zimmer, R.A., and Michie, J.D., *Recommended Procedures for the Safety Performance Evaluation of Highway Features*, National Cooperative Highway Research Program (NCHRP) Report 350, Transportation Research Board, Washington, D.C., 1993.

15. Hinch, J., Yang, T.L., and Owings, R., *Guidance Systems for Vehicle Testing*, ENSCO, Inc., Springfield, Virginia, 1986.

16. *Center of Gravity Test Code - SAE J874 March 1981*, SAE Handbook Vol. 4, Society of Automotive Engineers, Inc., Warrendale, Pennsylvania, 1986.

17. *Vehicle Damage Scale for Traffic Investigators*, Second Edition, Technical Bulletin No. 1, Traffic Accident Data (TAD) Project, National Safety Council, Chicago, Illinois, 1971.

18. *Collision Deformation Classification – Recommended Practice J224 March 1980*, Handbook Volume 4, Society of Automotive Engineers (SAE), Warrendale, Pennsylvania, 1985.

19. Hascall, J.A., Faller, R.K., Reid, J.D., Sicking, D.L., and Kretschmann, D.E., *Investigating the Use of Small-Diameter Softwood as Guardrail Posts (Dynamic Test Results)*, Final Report to the U.S. Department of Agriculture, Forest Service, Forest Products Laboratory, Report No. TRP-03-179-07, Midwest Roadside Safety Facility, Civil Engineering Department, University of Nebraska-Lincoln, March 28, 2007.

20. Faller, R.K., Reid, J.D., Kretshmann, D.E., Hascall, J.A., and Sicking, D.L., *Midwest Guardrail System with Round Timber Posts*, Transportation Research Record No. 2120, Transportation Research Board, Washington, D.C., 2009, pp 47-59.

# 8 APPENDICES

# Appendix A. Material Specifications

**GREGORY HIGHWAY PRODUCTS, INC.**
**4100 13th St. P.O. Box 80508**
**Canton, Ohio 44708**

Customer: UNIVERSITY OF NEBRASKA-LINCOLN
401 CANFIELD ADMIN BLDG
P O BOX 880439
LINCOLN, NE. 68588-0439

Test Report
B.O.L. # 39963 DATE SHIPPED: 05/07/09
Customer P.O. 4500204081/ 04/06/2009
Shipped to: UNIVERSITY OF NEBRASKA-LINCOLN
Project : TEST PANELS
GHP Order No 105271

| HT # code | C. | Mn. | P. | S. | Si. | Tensile | Yield | Elong. | Quantity | Class | Type | Description |
|---|---|---|---|---|---|---|---|---|---|---|---|---|
| 4614 | 0.21 | 0.84 | 0.011 | 0.003 | 0.03 | 89432 | 67993 | 19.8 | 160 | A | 2 | 12GA 12FT6IN/3FT1 1/2IN WB T2 |

Bolts comply with ASTM A-307 specifications and are galvanized in accordance with ASTM A-153, unless otherwise stated.
Nuts comply with ASTM A-563 specifications and are galvanized in accordance with ASTM A-153, unless otherwise stated.
All other galvanized material conforms with ASTM-123 & ASTM-525
All steel used in the manufacture is of Domestic Origin, "Made and Melted in the United States"
All Guardrail and Terminal Sections meets AASHTO M-180, All structural steel meets AASHTO M-183 & M270
All Bolts and Nuts are of Domestic Origin
All material fabricated in accordance with Nebraska Department of Transportation
All controlled oxidized/corrosion resistant Guardrail and terminal sections meet ASTM A606, Type 4.

By: Andrew Artar
Andrew Artar
Vice President of Sales & Marketing
Gregory Highway Products, Inc.

STATE OF OHIO: COUNTY OF STARK
Sworn to and subscribed before me, a Notary Public, by
Andrew Artar this 8th day of May, 2009.
Cynthia K Crawford
Notary Public, State of Ohio

NOTARIAL SEAL STATE OF OHIO

CYNTHIA K. CRAWFORD
Notary Public, State of Ohio
My Commission Expires 09-16-2012

MAY 14 2009

Figure A-1. 12-ft 6-in. (3,810-mm) Long W-Beam Guardrail Section Material Specifications, Test No. MGSWP-1

Trinity Highw roducts , LLC
25-18 N.E. 28th St.
Ft Worth, TX

Customer: MIDWEST MACH.& SUPPLY CO.
P. O. BOX 81097

LINCOLN, NE 68501-1097

Sales Order: 1112249
Customer PO: 2188
BOL # 28104
Document # 1

Print Date: 8/4/09
Project: RESALE
Shipped To: NE
Use State: KS

Trinity Highway Products, LLC
Certificate Of Compliance For Trinity Industries, Inc.
NCHRP Report 350 Compliant

| Pieces | Description |
|---|---|
| X 40 | 12/6'3/S |

Upon delivery, all materials subject to Trinity Highway Products , LLC Storage Stain Policy No. LG-002.

ALL STEEL USED WAS MELTED AND MANUFACTURED IN USA AND COMPLIES WITH THE BUY AMERICA ACT
ALL GUARDRAIL MEETS AASHTO M-180, ALL STRUCTURAL STEEL MEETS ASTM A36
ALL OTHER GALVANIZED MATERIAL CONFORMS WITH ASTM-123.
BOLTS COMPLY WITH ASTM A-307 SPECIFICATIONS AND ARE GALVANIZED IN ACCORDANCE WITH ASTM A-153, UNLESS OTHERWISE STATED.
NUTS COMPLY WITH ASTM A-563 SPECIFICATIONS AND ARE GALVANIZED IN ACCORDANCE WITH ASTM A-153, UNLESS OTHERWISE STATED.
3/4" DIA CABLE 6X19 ZINC COATED SWAGED END AISI C-1035 STEEL ANNEALED STUD 1" DIA ASTM 449 AASHTO M30, TYPE II BREAKING STRENGTH – 49100 LB

State of Texas, County of Tarrant: Sworn and subscribed before me this 4th day of August, 2009

Notary Public, State of Texas
My Commission Expires
July 13, 2013

Notary Public:
Commission Expires: / /

Trinity Highway Products, LLC
Certified By: Stefanie Ingle
Quality Assurance

1 of 1

Figure A-2. 6-ft 3-in. (1,905-mm) Long W-Beam Guardrail Section Material Specifications, Test No. MGSWP-1

S.I. Storey
LUMBER COMPANY, INC.

CERTIFICATE OF COMPLIANCE

AUGUST 4, 2009

MIDWEST MACHINERY & SUPPLY
PO BOX 81097
LINCOLN, NE 68501

THE FOLLOWING MATERIAL DELIVERED ON 8/3/09 ON BILL OF LADING NUMBER 19477 HAS BEEN INSPECTED BEFORE AND AFTER TREATMENT AND IS IN FULL COMPLIANCE WITH APPLICABLE NEBRASKA DEPARTMENT OF ROADS REQUIREMENTS FOR SOUTHERN YELLOW PINE TIMBER GUARDRAIL COMPONENTS, PRESERVATIVE TREATED WITH CHROMATED-COPPER-ARSENATE (CCA-C) TO A MINIMUM RETENTION OF .60 LBS/CU.FT. THE ACCEPTANCE OF EACH PIECE BY COMPANY QUALITY CONTROL IS INDICATED BY A HAMMER BRAND ON THE END OF EACH PIECE.

| | MATERIAL | | CHARGE # | DATE | RETENTION | QUANTITY |
|---|---|---|---|---|---|---|
| X | 6x8x14" | Blockout (CD) | 09-283 | 7/29/09 | 0.67 | 70 |
| | 6x8x6' | Line Post | 09-283 | 7/29/09 | 0.67 | 175 |
| X | 51/2x71/2-46" | TB Bullnose | 09-283 | 7/29/09 | 0.67 | 48 |
| | 6x6x8" | Blockout | 09-283 | 7/29/09 | 0.67 | 100 |
| | 6x8x22" | Blockout | 09-283 | 7/29/09 | 0.67 | 70 |

THIS CERTIFICATE APPLIES TO MATERIAL ORDERED FOR your order no.: .2191

FOR ANY INQUIRIES, PLEASE RETAIN THIS DOCUMENT FOR FUTURE REFERENCE.

THANK YOU FOR YOUR ORDER.

SINCERELY,

Karen L Sty

Karen Storey

SIGNED BEFORE ME THIS 4 DAY OF AUGUST 2009.

Notary: William S. Houston
Notary Public Floyd County Georgia
My Commission Expires Oct. 19, 2010

WILLIAM S. HOUSTON NOTARY PUBLIC EXP. Oct. 19, 2010 FLOYD COUNTY, GA.

Phone: 706-234-1605 P.O. Box 99, Armuchee, GA 30105 Fax: 706-235-8132

Figure A-3. BCT Anchor Timber Post Material Specifications, Test No. MGSWP-1

Charge Report
Plant No. : 1

Address
S.I. Storey Lumber Co.
285 Sike Storey Rd.
Armuchee, GA 30105
PH: 706 234-1605
Fax:706 235-8132

EPA Reg. No. 3008-36

Charge : 283
Treatment : Trail Type 1
Date : 7/29/09 12:42:23PM
Chemical : CCA
Target Retention : .60
Cylinder : 1 ( 9,090 )
Tank : 3
Operator : Richard
Total Time : 2:06:43
Turn Around Time (min) : 2,676
Time/Date Off Drip Pad :

Total Board Ft : 6,037
Total Cubic Ft : 491
Total Treatable Cubic Ft : 491
Displaced Volume In : 502
Displaced Volume Out : 535
Volume Start : 8,616
Volume Finish : 7,598
Volume Used : 1,018
Penetration Sampled : 0
Penetration Failed : 0
Treat By Tally : True

| Step | Time | | | Pressure | | | Injection | | | Retention | | | Flow Rate | | | Time | | | Volume | Reason |
|---|---|---|---|---|---|---|---|---|---|---|---|---|---|---|---|---|---|---|---|---|
| | Min | Max | Act | Min | Max | Act | Min | Max | Act | Min | Max | Act | Min | Max | Act | Ramp | Start | End | End | |
| Initial Vacuum | 0 | 17 | 17 | 0 | -23 | -23 | 0.00 | 0.00 | 0.00 | .00 | .00 | .00 | 0.00 | 0.00 | 0.00 | 0 | 12:42:23 | 12:59:25 | 8,616 | Time |
| Fill | 0 | 10 | 7 | 0 | -23 | 10 | 0.00 | 0.00 | 0.00 | .00 | .00 | .00 | 0.00 | 0.00 | 0.00 | 0 | 12:59:25 | 13:06:05 | 3,281 | Full |
| Raise Press | 0 | 2 | 0 | 0 | 75 | 78 | 0.00 | 0.00 | 0.08 | .00 | .00 | .01 | 0.00 | 0.00 | 0.00 | 0 | 13:06:06 | 13:06:26 | 3,159 | PSI |
| Pressure | 1 | 45 | 45 | 75 | 140 | 128 | 0.00 | 3.20 | 1.97 | .00 | .00 | .32 | 0.00 | 0.00 | 0.01 | 1 | 13:06:26 | 13:51:27 | 2,229 | Time |
| Press Relief | 0 | 1 | 1 | 0 | 25 | 13 | 0.00 | 0.00 | 1.93 | .00 | .00 | .31 | 0.00 | 0.00 | 0.00 | 1 | 13:51:27 | 13:52:15 | 2,249 | PSI |
| Empty | 0 | 10 | 9 | 0 | 0 | 0 | 0.00 | 0.00 | 2.61 | .00 | .00 | .42 | 0.00 | 0.00 | 0.00 | 0 | 13:52:15 | 14:00:55 | 7,334 | Empty |
| Final Vacuum | 0 | 45 | 45 | 0 | -29 | -26 | 0.00 | 1.75 | 2.10 | .00 | .00 | .34 | 0.00 | 0.00 | 0.01 | 0 | 14:00:55 | 14:45:57 | 7,588 | Time |
| Final Empty | 0 | 1 | 2 | -1 | -1 | -1 | 0.00 | 0.00 | 2.09 | .00 | .00 | .34 | 0.00 | 0.00 | 0.00 | 0 | 14:45:57 | 14:48:02 | 7,593 | Empty |
| Finish | 0 | 1 | 1 | 0 | -1 | 0 | 0.00 | 0.00 | 2.07 | .00 | .00 | .34 | 0.00 | 0.00 | 0.00 | 0 | 14:48:03 | 14:49:06 | 7,598 | Time |

| Chemical | Solution Percent | | Lbs. Per Gallon | | | Total Lbs. | | Retention | | Assay | |
|---|---|---|---|---|---|---|---|---|---|---|---|
| | Start | Finish | Start | Finish | Absorbed | Gauge | Absorbed | Gauge | Absorbed | Min Reten | Wood |
| CCA | 1.90 % | 1.90 % | .1624 | .1624 | .1624 | 165 | 165 | .337 | .337 | - | - |
| Totals : | 1.90 % | 1.90 % | .1624 | .1624 | .1624 | 165 | 165 | .337 | .337 | .60 | - |

*Additive List*

| Additives | Solution % |
|---|---|
| | |

*Automatic Mix Information*

| Chemical | Current Value | Target Value | Required | Actual | Difference |
|---|---|---|---|---|---|
| Water | - Gals. | - Gals. | 1,319 Gals. | 1,311 Gals. | -8 Gals. |
| CCA | 1.88 % | 1.90 % | 25 Gals. | 25 Gals. | - Gals. |

1 021.001021.60 Pieces: 175 Packs/Size : 5 @ 35 Desc: 6 x 8 x 6 Line Post Rough Nebraska #1 Dense BF: 4,200 CF: 350 HW: - % Moist. Cont.: - %
Std.: .60 Mill: Cust Num: None Retreat?: False Chg#: 0 Species: SYP Rem1: None

2 021.001008.60 Pieces: 70 Packs/Size : 1 @ 70 Desc: 6 x 8 x 0-14 Blockout Rough BF: 329 CF: 27 HW: - % Moist. Cont.: - %
Std.: .60 Mill: Cust Num: None Retreat?: False Chg#: 0 Species: SYP Rem1: None

3 9999 Pieces: 48 Packs/Size : 1 @ 48 Desc: 5-1/2 x 7-1/2 x 0-46 TB Bullnose Post BF: 720 CF:
Std.: .60 Mill: Cust Num: None Retreat?: False Chg#: 0 Species: SYP

4 9999 Pieces: 70 Packs/Size : 1 @ 70 Desc: 6 x 8 x 0-22" Rough Blockout BF: 513 CF:
Std.: .60 Mill: Cust Num: None Retreat?: False Chg#: 0 Species: SYP

5 9999 Pieces: 100 Packs/Size : 1 @ 100 Desc: 6 x 6 x 8" Post Block CCA .60 BF: 275 CF:
Std.: .40 Mill: Cust Num: None Retreat?: False Chg#: 0 Species: SYP

ANALYSIS REPORT
RETENTION
CR03 = 0.32 pcf
CU0 = 0.12 pcf
AS205 = 0.23 pcf
TOTAL RETENTION
0.67 pcf

Printed on: 8/4/09 9:34:53AM Plant Number : 1 Charge Number : 283 Page 1 of 1

Figure A-4. BCT Anchor Timber Post Material Specifications, Test No. MGSWP-1

MATERIAL TEST REPORT

ATE: 09/25/07

PAGE: 1

BILL OF LADING: 164358

LEAVITT TUBE COMPANY, LLC

LEAVITT
The Tube People

Leavitt Tube Co., LLC
1717 W. 115th St.
Chicago, IL 60643

Phone: 773-239-7700
Phone: 1-800-LEAVITT
Fax: 773-239-1023
www.leavitt-tube.com
QA1002-0003 Rev. 0

CUST: STEEL & PIPE SUPPLY - CATOOSA OK
1050 FORT GIBSON ROAD
CATOOSA OK 74015

TUBING MANUFACTURED IN USA

ATTN: * Test Report Desk

106201 8027185

| ITEM NO. | PIECES | SIZE, GAUGE,LENGTH | QTY. SHIPPED | CUSTOMER P.O. | ORDER NUMBER | CUSTOMER PART NBR | ASTM SPECIFICATION | GRADE |
|---|---|---|---|---|---|---|---|---|
| 1 | 7 | 8.625-322HRB 252 | 147 | 4500088611 | 1015580 1.000 | | A500-03b | B |
| 2 | 6 | 12X2-188HRB 480 | 240 | 4500088813 | 1016034 1.000 | | A500-03b | B |
| 3 - 4 | 28 | 8.625-322HRB 504 | 1,176 | 4500091471 | 1025579 1.000 | | A500-03b | B |
| 5 | 9 | 8X6-188HRB 480 | 360 | 4500092386 | 1029189 1.000 | | A500-03b | B |

| ITEM NO. | 1 | 2 | 3 | 4 | 5 |
|---|---|---|---|---|---|
| COIL NO. | 395453 | 395532 | 395813 | 395460 | 391232 |
| HEAT NO. | 722562 | 722551 | 722564 | 722564 | A13386 |
| CORRECTED COIL | | | | | |
| CARBON | .210 | .210 | .210 | .210 | .220 |
| MANGANESE | .820 | .860 | .820 | .820 | .700 |
| PHOSPHORUS | .004 | .006 | .004 | .004 | .006 |
| SULFUR | .006 | .004 | .006 | .006 | .003 |
| ALUMINUM | .047 | .050 | .047 | .047 | .024 |
| SILICON | .020 | .030 | .020 | .020 | .030 |
| WELD TESTING | FLATTEN | FLARE | FLATTEN | FLATTEN | FLARE |
| YIELD STRENGTH (PSI) | 47,297 | | | 52,000 | 55,056 |
| TENSILE STRENGTH (PSI) | 62,162 | | | 70,666 | 70,787 |
| ELONGATION IN 2" (%) | 29.0 | | | 31.0 | 27.0 |

Item(s)- 1 2 3 4 5 Are
Made and Melted
In The U.S.A.

I HEREBY CERTIFY THAT THE ABOVE IS CORRECT
AS CONTAINED IN THE RECORDS OF THE COMPANY.

Figure A-5. BCT Anchor Foundation Tube Material Specifications, Test No. MGSWP-1

425 E. O'Connor
Lima, OH

Customer: MIDWEST MACH.& SUPPLY CO.
P. O. BOX 81097

LINCOLN, NE 68501-1097

Sales Order: 1093497
Customer PO: 2030
BOL # 43073
Document # 1

Print Date: 6/30/08
Project: RESALE
Shipped To: NE
Use State: KS

Trinity Highway Products, LLC

Certificate Of Compliance For Trinity Industries, Inc. ** SLOTTED RAIL TERMINAL **

NCHRP Report 350 Compliant

| Pieces | Description |
|---|---|
| 64 | 5/8"X10" GR BOLT A307 |
| 192 | 5/8"X18" GR BOLT A307 |
| 32 | 1" ROUND WASHER F844 |
| 64 | 1" HEX NUT A563 |
| 192 | WD 6'0 POST 6X8 CRT |
| 192 | WD BLK 6X8X14 DR |
| 64 | NAIL 16d SRT |
| 64 | WD 3'9 POST 5.5X7.5 BAND |
| 32 | STRUT & YOKE ASSY |
| 128 | SLOT GUARD '98 |
| 32 | 3/8 X 3 X 4 PL WASHER |

MGSBR

Ground Strut

090453-8

Upon delivery, all materials subject to Trinity Highway Products , LLC Storage Stain Policy No. LG-002.

ALL STEEL USED WAS MELTED AND MANUFACTURED IN USA AND COMPLIES WITH THE BUY AMERICA ACT
ALL GUARDRAIL MEETS AASHTO M-180, ALL STRUCTURAL STEEL MEETS ASTM A36
ALL OTHER GALVANIZED MATERIAL CONFORMS WITH ASTM-123.
BOLTS COMPLY WITH ASTM A-307 SPECIFICATIONS AND ARE GALVANIZED IN ACCORDANCE WITH ASTM A-153, UNLESS OTHERWISE STATED.
NUTS COMPLY WITH ASTM A-563 SPECIFICATIONS AND ARE GALVANIZED IN ACCORDANCE WITH ASTM A-153, UNLESS OTHERWISE STATED.
'4" DIA CABLE 6X19 ZINC COATED SWAGED END AISI C-1035 STEEL ANNEALED STUD 1" DIA ASTM 449 AASHTO M30, TYPE II BREAKING
TRENGTH – 49100 LB
tate of Ohio, County of Allen. Sworn and Subscribed before me this 30th day of June, 2008

otary Public:
ommission Expires

Trinity Highway Products, LLC
Certified By:

2 of 4

Figure A-6. Groundline Strut and Yoke Assembly Material Specifications, Test No. MGSWP-1

EXLTUBE

905 ATLANTIC STREET, NORTH KANSAS CITY, MO 64116 1-816-474-5210 TOLL FREE 1-800-892-TUBE

STEEL VENTURES, LLC dba EXLTUBE

CERTIFIED TEST REPORT

| Customer: | Size: | Spec No: | Date: |
|---|---|---|---|
| SPS - New Century<br>401 New Century Parkway<br>New Century KS 66031 | 02.375 | ASTM A500-07, A53E-07 | 05/22/2008 |
| | Gauge: .154 | Grade: A500B,C, A53BNT | Customer Order No: 4500104158 |
| | | | B/L No: 61162893 |

| Heat No | Yield P.S.I. | Tensile P.S.I. | Elongation % 2 Inch |
|---|---|---|---|
| 280638 | 61,500 | 66,400 | 23.00 |

SLEEVE MAT
CRT

| Heat No | C | MN | P | S | SI | CU | NI | CR | MO | V |
|---|---|---|---|---|---|---|---|---|---|---|
| 280638 | 0.040 | 0.330 | 0.010 | 0.000 | 0.034 | 0.098 | 0.039 | 0.042 | 0.015 | 0.003 |

We hereby certify that the above material was manufactured in the U.S.A and that all test results shown in this report are correct as contained in the records of our company. All testing and manufacturing is in accordance to A.S.T.M. parameters encompassed within the scope of the specifications denoted in the specification and grade tiles above.

BNT = Grade B not tested - meets tensile properties ONLY.

STEEL VENTURES, LLC dba EXLTUBE

Steve Frerichs
Quality Assurance Manager

104158

Figure A-7. BCT Anchor Post Sleeve Material Specifications, Test No. MGSWP-1

# Certified Analysis

Trinity Highway Products , LLC
425 E. O'Connor
Lima, OH
Customer: MIDWEST MACH.& SUPPLY CO.
P. O. BOX 81097

LINCOLN, NE 68501-1097
Project: RESALE

Order Number: 1114174
Customer PO: 2213
BOL Number: 51169
Document #: 1
Shipped To: NE
Use State: NE

As of: 9/16/09

| Qty | Part # | Description | Spec | CL | TY | Heat Code/ Heat # | Yield | TS | Elg | C | Mn | P | S | Si | Cu | Cb | Cr | Vn | ACW |
|---|---|---|---|---|---|---|---|---|---|---|---|---|---|---|---|---|---|---|---|
| 750 | 545G | 6'0 POST/DB:DDR | A-36 | | | J86489 | 50,565 | 68,830 | 26.1 | 0.090 | 0.950 | 0.010 | 0.040 | 0.200 | 0.290 | 0.00 | 0.160 | 0.003 | 4 |
| 50 | 14662G | 6'6 POST/8.5#/DB:DDR | NB | A-36 | | J86489 | 50,565 | 68,830 | 26.1 | 0.090 | 0.950 | 0.010 | 0.040 | 0.200 | 0.290 | 0.00 | 0.160 | 0.003 | 4 |

Upon delivery, all materials subject to Trinity Highway Products , LLC Storage Stain Policy No. LG-002.

ALL STEEL USED WAS MELTED AND MANUFACTURED IN USA AND COMPLIES WITH THE BUY AMERICA ACT.
ALL GUARDRAIL MEETS AASHTO M-180, ALL STRUCTURAL STEEL MEETS ASTM A36
ALL GALVANIZED MATERIAL CONFORMS WITH ASTM-123, UNLESS OTHERWISE STATED.
BOLTS COMPLY WITH ASTM A-307 SPECIFICATIONS AND ARE GALVANIZED IN ACCORDANCE WITH ASTM A-153, UNLESS OTHERWISE STATED.
NUTS COMPLY WITH ASTM A-563 SPECIFICATIONS AND ARE GALVANIZED IN ACCORDANCE WITH ASTM A-153, UNLESS OTHERWISE STATED.

3/4" DIA CABLE 6X19 ZINC COATED SWAGED END AISI C-1035 STEEL ANNEALED STUD 1" DIA ASTM 449 AASHTO M30, TYPE II BREAKING STRENGTH – 49100 LB

State of Ohio, County of Allen. Sworn and subscribed before me this 16th day of September, 2009
Notary Public:
Commission Expires 1/28/2012

Trinity Highway Products , LLC
Certified By:
Quality Assurance

1 of 1

Figure A-8. BCT Cable Anchor Assembly Material Specifications, Test No. MGSWP-1

Jun-15-2009 08:12am From-Portsous Denver 1 303 576 0533 T-510 P.002/003 F-448

1"

Certification provided by:PFC, To:NEBRASKA BOLT Order:124841

**FASTENER DIVISION**

Telephone 260/337-1600

CUSTOMER NO/NAME
267 PORTEOUS FASTENER CO.
TEST REPORT SERIAL# FB285168
TEST REPORT ISSUE DATE 4/20/07
DATE SHIPPED 10/04/07
NAME OF LAB SAMPLER: SHIRRI STANTZ, LAB TECHNICIAN

NUCOR ORDER # 608934
CUST PART # 00219-4000-004
CUSTOMER P.O. # 17878232

******************CERTIFIED MATERIAL TEST REPORT******************

| NUCOR PART NO | QUANTITY | LOT NO. | DESCRIPTION |
|---|---|---|---|
| 175407 | 7200 | 222445A 1-8 | GR DH HV H.D.G. HEX NUT H.D.G. |

MANUFACTURE DATE 1/29/07

--CHEMISTRY

MATERIAL GRADE -1045L

| MATERIAL NUMBER | HEAT NUMBER | C | MN | P | S | SI |
|---|---|---|---|---|---|---|
| RM623446 | NU 838828 | .45 | .69 | .013 | .021 | .18 |
| | | MIN .20 | .60 | | | |
| | | MAX .55 | | .040 | .050 | |

NU 838828

**CHEMISTRY COMPOSITION (WT% HEAT ANALYSIS) BY MATERIAL SUPPLIER
NUCOR STEEL - NEBRASKA
A2LA NO: 780.01 EXP: 2008-11-30
FOR CHEMICAL TESTING

--MECHANICAL PROPERTIES IN ACCORDANCE WITH ASTM A563-04A

| SURFACE HARDNESS (R30N) | CORE HARDNESS (RC) | PROOF LOAD 90900, LBS | TENSILE STRENGTH (LBS) | DEG-WEDGE STRESS (PSI) |
|---|---|---|---|---|
| N/A | 28.1 | PASS | N/A | N/A |
| N/A | 30.8 | PASS | N/A | N/A |
| N/A | 31.0 | PASS | N/A | N/A |
| N/A | 28.5 | PASS | N/A | N/A |
| N/A | 28.0 | PASS | N/A | N/A |
| AVERAGE VALUES FROM TESTS 29.3 | | PRODUCTION LOT SIZE | 67000 PCS | |

ROTATIONAL CAPACITY TESTED IN ACCORDANCE WITH A325, A563 AND F606 TO 360 DEGREES OF ROTATION.
SAMPLE #1 PASSED SAMPLE #2 PASSED

--VISUAL INSPECTION IN ACCORDANCE WITH ASTM A563-04a 80 PCS. SAMPLED LOT PASSED

--COATING - Hot Dip Galvanized.

| | | | | | | | | | | | | | |
|---|---|---|---|---|---|---|---|---|---|---|---|---|---|
| 1. | 0.00433 | 2. | 0.00404 | 3. | 0.00356 | 4. | 0.00331 | 5. | 0.00354 | 6. | 0.00468 | 7. | 0.00617 |
| 8. | 0.00567 | 9. | 0.00341 | 10. | 0.00637 | 11. | 0.00426 | 12. | 0.00495 | 13. | 0.00587 | 14. | 0.00399 |
| 15. | 0.00395 | 16. | 0.00364 | 17. | 0.00489 | 18. | 0.00342 | 19. | 0.00364 | 20. | 0.00399 | | |

AVERAGE THICKNESS FROM 20 TESTS .00413
HEAT TREATMENT - AUSTENITIZED, OIL QUENCHED & TEMPERED (MIN 880 DEG F)

--DIMENSIONS PER ASME B18.2.6-2003

| CHARACTERISTIC | #SAMPLES TESTED | MINIMUM | MAXIMUM |
|---|---|---|---|
| Width Across Corners | 8 | 1.8199 | 1.8300 |
| Thickness | 32 | 0.9670 | 0.9830 |

ALL TESTS ARE IN ACCORDANCE WITH THE LATEST REVISIONS OF THE METHODS PRESCRIBED IN THE APPLICABLE SAE AND ASTM SPECIFICATIONS. THE SAMPLES TESTED CONFORM TO THE SPECIFICATIONS AS DESCRIBED/LISTED ABOVE AND WERE MANUFACTURED FREE OF MERCURY CONTAMINATION.
THE STEEL WAS MELTED AND MANUFACTURED IN THE U.S.A. AND THE PRODUCT WAS MANUFACTURED AND TESTED IN THE U.S.A.
WE CERTIFY THAT THIS DATA IS A TRUE REPRESENTATION OF INFORMATION PROVIDED BY THE MATERIAL SUPPLIER AND OUR TESTING LABORATORY. THIS CERTIFIED MATERIAL TEST REPORT RELATES ONLY TO THE ITEMS LISTED ON THIS DOCUMENT AND MAY NOT BE REPRODUCED EXCEPT IN FULL.

ACCREDITED

MECHANICAL FASTENER
CERTIFICATE NO. A2LA 139-01
EXPIRATION DATE 12/31/07

NUCOR FASTENER
A DIVISION OF NUCOR CORPORATION

Chris Kamer
CHRIS KAMER
QUALITY ASSURANCE SUPERVISOR

Page 1 of 1

Jun 17 2009 9:22 HP LASERJET FAX p.3

Figure A-9. BCT Cable Anchor Assembly, Test No. MGSWP-1

06/04/2009 16:36 402-761-3288 MIDWEST MACHINERY PAGE 52/52

# Certified Analysis

Trinity Highway Products, LLC
2548 N.E. 28th St.
Ft Worth, TX
Customer: MIDWEST MACH.& SUPPLY CO.
P. O. BOX 81097

LINCOLN, NE 68501-1097
Project: RESALE

Order Number: 1095199
Customer PO: 2041
BOL Number: 24481
Document #: 1
Shipped To: NE
Use State: KS

As of: 6/20/08

| Qty | Part # | Description | Spec | CL | TY | Heat Code/ Heat # | Yield | TS | Elg | C | Mn | P | S | Si | Cu | Cb | Cr | Vn | ACW |
|---|---|---|---|---|---|---|---|---|---|---|---|---|---|---|---|---|---|---|---|
| 25 | 6G | 12/6'3/8 | M-180 | A | | 84964 | 64,230 | 81,300 | 25.4 | 0.180 | 0.720 | 0.012 | 0.001 | 0.040 | 0.080 | 0.000 | 0.060 | 0.000 | 4 |
| 20 | 701A | .25X11.75X16 CAB ANC | A-36 | | | 4153095 | 44,900 | 60,800 | 34.0 | 0.240 | 0.750 | 0.012 | 0.003 | 0.020 | 0.020 | 0.000 | 0.040 | 0.002 | 4 |
| 10 | 742G | 6'0 TUBE SL/.188X8X6 | A-500 | | | A8P1160 | 74,000 | 87,000 | 25.2 | 0.050 | 0.670 | 0.013 | 0.005 | 0.030 | 0.220 | 0.000 | 0.060 | 0.021 | 4 |
| 20 | 782G | 5/8"X8"X8" BEAR PL/OF | A-36 | | | 6106195 | 46,700 | 69,900 | 23.5 | 0.180 | 0.830 | 0.010 | 0.005 | 0.020 | 0.230 | 0.000 | 0.070 | 0.006 | 4 |
| 40 | 907G | 12/BUFFER/ROLLED | M-180 | A | | L0049 | 54,200 | 73,500 | 25.0 | 0.160 | 0.700 | 0.011 | 0.008 | 0.020 | 0.200 | 0.000 | 0.100 | 0.000 | 4 |

Upon delivery, all materials subject to Trinity Highway Products, LLC Storage Stain Policy No. LG-002.

ALL STEEL USED WAS MELTED AND MANUFACTURED IN USA AND COMPLIES WITH THE BUY AMERICA ACT.
ALL GUARDRAIL MEETS AASHTO M-180, ALL STRUCTURAL STEEL MEETS ASTM A36
ALL OTHER GALVANIZED MATERIAL CONFORMS WITH ASTM-123.
BOLTS COMPLY WITH ASTM A-307 SPECIFICATIONS AND ARE GALVANIZED IN ACCORDANCE WITH ASTM A-153, UNLESS OTHERWISE STATED.
NUTS COMPLY WITH ASTM A-563 SPECIFICATIONS AND ARE GALVANIZED IN ACCORDANCE WITH ASTM A-153, UNLESS OTHERWISE STATED.

3/4" DIA CABLE 6X19 ZINC COATED SWAGED END AISI C-1035 STEEL ANNEALED STUD 1" DIA ASTM 449 AASHTO M30, TYPE II BREAKING STRENGTH – 49100 LB

State of Texas, County of Tarrant. Sworn and subscribed before me this 20th day of June, 2008

Notary Public:
Commission Expires

RACHEL R. MEDINA
Notary Public
State of Texas
My Commission Expires

Trinity Highway Products, LLC
Certified By: Stefanie Onsl.e

Figure A-10. BCT Cable Anchor Bracket Assembly and End Plate Material Specifications, Test No. MGSWP-1

06/04/2009 16:36 402-761-3288 MIDWEST MACHINERY

TRINITY HIGHWAY PRODUCTS, LCC.
Plant #55
425 E. O' CONNOR AVENUE
Lima, OH 45801
419-227-1296

MATERIAL CERTIFICATION

| | |
|---|---|
| CUSTOMER: STOCK | DATE: March 10, 2009 |
| | INVOICE # |
| | LOT NUMBER: 081128B |
| PART NUMBER: 3360G | QUANTITY: 107,458 |
| DESCRIPTION: 5/8"x 1 ½" GR BOLT | DATE SHIPPED: |
| SPECIFICATIONS: ASTM A307-A /A153 | HEAT#: 7366484,7262312 |

MATERIAL CHEMISTRY

| C | MN | P | S | SI | NI | CR | MO | CU | SN | V | AL | N | B | TI | NB |
|---|---|---|---|---|---|---|---|---|---|---|---|---|---|---|---|
| .13 | .38 | .007 | .002 | .18 | .04 | .06 | .02 | .03 | .001 | .002 | .037 | .004 | .000 | .000 | .000 |
| .15 | .48 | .006 | .007 | .06 | .02 | .04 | .02 | .02 | .001 | .002 | .024 | .0039 | .000 | .000 | .000 |

PLATING AND/OR PROTECTIVE COATING

| | | |
|---|---|---|
| HOT DIP GALVANIZED (OZ. PER SQ. FT.) | | 1.25 Avg. |

****THIS PRODUCT WAS MANUFACTURED IN THE UNITED STATES OF AMERICA****

THE MATERIAL USED IN THIS PRODUCT WAS MELTED AND MANUFACTURED IN THE U.S.A

WE HEREBY CERTIFY THAT TO THE BEST OF OUR KNOWLEDGE ALL INFORMATION CONTAINED HEREIN IS CORRECT.

TRINITY HIGHWAY PRODUCTS, LLC.

STATE OF OHIO, COUNTY OF ALLEN
SWORN AND SUBSCRIBED BEFORE ME
THIS 10TH DAY OF MARCH, 2009

NOTARY PUBLIC

425 E. O 'CONNOR AVENUE LIMA, OH 45801 419-227-1296

Figure A-11. Splice Bolt Material Specifications, Test No. MGSWP-1

06/04/2009 16:36 402-751-3288 MIDWEST MACHINERY

**MID WEST**
**FABRICATING CO.**

**CERTIFICATE OF COMPLIANCE**

WE CERTIFY THAT ALL BOLTS ARE MADE AND MANUFACTURED IN THE USA.

TO: TRINITY INDUSTRIES INC.
Plant #55
425 E. O'Connor 419-222-7398
Lima,Ohio 45801
SHIP DATE:.11/6/2008
MANUFACTURER: MID WEST FABRICATING CO.
ASTM: A307A
GALVANIZERS: Columbus/Piolt TO A-153 CLASS C

| QTY | PART NO. | HEAT NO. | LOT NO. | P.O.NO. |
|---|---|---|---|---|
| 3,524 | 5/8 X 10-6" | 7261134 | 85204 | 126266BR80 |
| 1,076 | 5/8 X 10-6" | 7261134 | 85204 | 126266BR78 |
| 8,900 | 5/8 X 10-6" | 7261134 | 85204 | 126266BR74 |
| 4,500 | 5/8 X 10-6" | 7261611 | 85217 | 126266BR74 |
| 2,550 | 5/8 X 10W-6" | 7261286 | 85180 | 126266BR84 |
| 4,500 | 5/8 X 14-6" | 7366618 | 85199 | 126266BR68 |
| 6,000 | 5/8 X 18-6" | 7366618 | 85157 | 126266BR84 |
| 1,536 | 5/8 X 18-6" | 7366618 | 85157 | 126266BR74 |
| 130 | 5/8 X 18-6" | 7366618 | 85156 | 126266BR74 |
| 2,964 | 5/8 X 18-6" | 7366618 | 85149 | 126266BR74 |
| 4,370 | 5/8 X 18-6" | 7261611 | 85146 | 126266BR74 |
| 400 | 5/8 X 3.5" | 5978691 | 85016 | 126266BR82 |

Signature D. Smith
TITLE: QUALITY CONTROL
DATE: 11/6/2008

313 North Johns Street • Amanda, Ohio 43102 • 740/969-4411 • FAX: 740/969-4433

Figure A-12. 10-in. (254-mm) Long Post Bolt Material Specifications, Test No. MGSWP-1

06/04/2009 16:36 402-761-3288 MIDWEST MACHINERY PAGE 08/02

08/14/2008 12:38 KREMER_STEEL → 17406814433 NO.087 002

#6

Republic ENGINEERED PRODUCTS

1807 EAST 28TH ST.
PHONE: 330-438-5494

LORAIN, OH 44
FAX: 330-438-5

ERTIFICATE OF TESTS

REPUBLIC ENGINEERED PRODUCTS

August 5, 2008
PAGE 1

P 1

ORCHASE ORD: 17436
ART NUMBER: 63744
RDER NUMBER: 1390624 - 01
EAT: 7261811

PURCHASE ORDER DATE: 6/30/2008
ACCOUNT NUMBER: 5603-2943-01
SCHEDULE: 5135-85
REVISION: 1

CHARGE ADDRESS

KREMER STEEL COMPANY LLC
1350 W 25TH AVE
MELROSE PARK, IL 60160

SHIP TO

KREMER STEEL COMPANY LLC
ERIN
C/O MID WEST FABRICATING
313 JOHNS ST
AMANDA, OH 45102

MATERIAL DESCRIPTION

OT ROLLED STEEL COILS CARBON AISI-1015 SI KILLED FINE GRAIN COLD WORKING QUALITY
IZE: RDS .5790 DIAM X COIL
RDS 14.6812MM DIAM X COIL

LADLE CHEMISTRY %

| C | MN | P | S | SI | CU | NI | CR |
|---|---|---|---|---|---|---|---|
| 0.15 | 0.53 | 0.009 | 0.003 | 0.25 | 0.04 | 0.06 | 0.10 |
| V | MO | SN | AL | CE | N | | |
| 0.002 | 0.04 | 0.002 | 0.042 | 0.001 | 0.0040 | | |

CALCULATED TESTS

EDUCTION RATIO 137.2 TO 1

UTENITIC GRAIN SIZE 5 OR FINER BASED ON A TOTAL ALUMINUM CONTENT EQUAL TO OR GREATER THAN .020% PER
STM A29.

SEMI - FINISHED RESULTS

FINISHED SIZE RESULTS

NOTES

EMICAL ANALYSIS CONFORMS TO APPLICABLE SPECS: ASTM E415, LBL10129, LBL10138, ASTM E1019,
L10159, LBL10114, AND ASTM E1086, LBL10194, LBL10188.

PUBLIC ENGINEERED PRODUCTS HEREBY CERTIFY THAT THE MATERIAL LISTED HEREIN HAS BEEN INSPECTED AND
STED IN ACCORDANCE WITH THE METHODS PRESCRIBED IN THE GOVERNING SPECIFICATIONS AND BASED UPON THE
SULTS OF SUCH INSPECTION AND TESTING HAS BEEN APPROVED FOR CONFORMANCE TO THE SPECIFICATIONS.

RTIFICATE OF TESTS SHALL NOT BE REPRODUCED EXCEPT IN FULL.

L TESTING HAS BEEN PERFORMED USING THE CURRENT REVISION OF THE TESTING SPECIFICATIONS.

CORDING OF FALSE, FICTITIOUS OR FRAUDULENT STATEMENTS OR ENTRIES ON THIS DOCUMENT MAY BE PUNISHED
A FELONY UNDER FED STATUES TITLE 18 CHAPTER 47.

E MATERIAL WAS NOT EXPOSED TO MERCURY OR ANY METAL ALLOY THAT IS LIQUID AT AMBIENT TEMPERATURE
RING PROCESSING OR WHILE IN OUR POSSESSION.

WELD OR WELD REPAIR WAS PERFORMED ON THIS MATERIAL.

E RESULTS REPORTED RELATE ONLY TO THE ITEMS TESTED

SOURCE INFORMATION

LT SOURCE: LORAIN BILLET MELT COUNTRY: U.S.A HOT ROLL SOURCE: LORAIN 9/10, U.S.A
LT METHOD: BOF BILLET RED. RATIO: 137.2

END OF DATA CC END OF DATA

K SHIP TO 1 COPY ATTENTION MARK STEWART 12486699005
H SHIPMENT 1 COPY PRINTED AT SHIPPING AREA
LE 1 COPY

A. A. SKELIGA BY JANET K. HARTLINE
MGER TECH. SERVICES

Figure A-13. 10-in. (254-mm) Long Post Bolt Material Specifications, Test No. MGSWP-1

06/04/2009 16:36 402-761-3288 MIDWEST MACHINERY PAGE 07/52

P.O. 2095

08/14/2008 12:38 KREHER STEEL → 17405814433 NO.057 [illegible]

#Ce

14Aug08 12:42 T E S T C E R T I F I C A T E No: 1 87458

KREHER STEEL CO.
8585 P.G.A. Dr. #200
WALLED LAKE, MI 48390

P/O No 63744
Rel
S/O No 1 175342-001
S/L No 1 146909-001 Shp 14Aug08
Inv No Inv

Sold To: ( 7487)
MID WEST FABRICATING CO.
313 NORTH JOHNS STREET
AMANDA OH 43102

Ship To: ( 0)
MID WEST FABRICATING CO.
313 NORTH JOHNS STREET
AMANDA OH 43102

Tel: 740-969-4411 Fax: 740-969-4433

CERTIFICATE of ANALYSIS and TESTS Cert. No: 1 87458
14Aug08

Part No
HOT ROLLED ROUND COIL 1015 SKFG Pcs Wgt
.5780 GREEN 0 50,890

FULL COILS
BUYER:ANN
MTR
SHIP +\- 10% OF ORDER QUANTITY

Heat Number *** Chemical Analysis ***
261611 C=0.1500 Mn=0.5300 P=0.0080 S=0.0030 Si=0.2500 Cu=0.0400
Ni=0.0600 Cr=0.1000 Mo=0.0400 Sn=<.002> Al=<.042> Cb=<.001>
N=<.0040> GR=<FINE>

I hereby certify that this data is correct as contained in the records of this company.
I hereby certify that no mercury came in contact with or no weld repair was done to this product while in our possession.

Page: 1 .... Last

Figure A-14. 10-in. (254-mm) Long Post Bolt Material Specifications, Test No. MGSWP-1

06/04/2009 16:36 402-761-3288 MIDWEST MACHINERY PAGE 09/52

**V&S COLUMBUS GALVANIZING LLC**
100 Buckeye Park Road
Columbus, OH 43207
(614) 443-4821

## QUALITY ASSURANCE CERTIFICATION

CUSTOMER NAME
Midwest Fabricating Company
3115 W. Fair Avenue
Lancaster, OH 43130
CUSTOMER ORDER NO.: 6891
PROJECT NAME/NO.: X99

SHOP ORDER NO.: X99
DATE GALVANIZED: 9-19-08
DATE INSPECTED: 9-19-08
SHIPPER NO.: X99

| | | | |
|---|---|---|---|
| 5 TUB | Part: 10-6 | Description: Post Bolt | |
| | Approx Pcs. 4,517 | Lot # 85217 | |
| TUB | Part: | Description: | |
| | Approx Pcs. | Lot # | |
| TUB | Part: | Description: | |
| | Approx Pcs. | Lot # | |
| TUB | Part: | Description: | |
| | Approx Pcs. | Lot # | |
| TUB | Part: | Description: | |
| | Approx Pcs. | Lot # | |
| TUB | Part: | Description: | |
| | Approx Pcs. | Lot # | |

This is to certify that the material on the shop order No. noted above was galvanized in accordance with the recommended practices outlined in the ASTM Standards for the type material described in our shipping document; and that this material has been inspected and does meet the minimum standards for acceptance as described by the ASTM Standards.

Applicable Specifications:
ASTM A153/F2329

Owner/Designer Inspection & Approval

V&S Columbus Galvanizing LLC
Rick Hamaker

Figure A-15. 10-in. (254-mm) Long Post Bolt Material Specifications, Test No. MGSWP-1

06/04/2009 16:36 402-761-3288 MIDWEST MACHINERY

**Mid West Fabricating Company**
Rockmill Division
3115 West Fair Avenue
Lancaster, OH 43130
(740) 681-4411

## Lab Test Report

| | |
|---|---|
| Date: | 24-Sep-08 |
| Part Number: | 10-6 |
| Description: | 10" POST BOLT W/6" THRD |
| Lot Number: | 85217 |
| Customer: | Trinity |
| Test Type: | Permiscope |
| Heat Number: | 7261611 |
| Processor: | Columbus |
| Testing Standard: | ASTM=A153-A153/98 |
| Requirement: | 1.77 Mil |
| Sample Qty: | 20 |
| Disposition: | Ship |
| Ship ID: | X99 |

### Data Results

| | |
|---|---|
| Sample 1: | 2.65 |
| Sample 2: | 2.84 |
| Sample 3: | 2.63 |
| Sample 4: | 2.95 |
| Sample 5: | 3.28 |
| Sample 6: | 2.18 |
| Sample 7: | 3.12 |
| Sample 8: | 2.64 |
| Sample 9: | 3.50 |
| Sample 10: | 3.71 |
| Sample 11: | 2.16 |
| Sample 12: | 2.73 |
| Sample 13: | 3.01 |
| Sample 14: | 2.70 |
| Sample 15: | 2.80 |
| Sample 16: | 3.26 |
| Sample 17: | 3.12 |
| Sample 18: | 2.39 |
| Sample 19: | 2.44 |
| Sample 20: | 2.58 |
| Average: | 2.84 |

✓ Conformance

Non-Conformance

Performed By: D.Smith

This report shall not be reproduced, except in full, without the written approval of Mid West Fabricating Company's Quality Department.

Figure A-16. 10-in. (254-mm) Long Post Bolt Material Specifications, Test No. MGSWP-1

06/04/2009 16:36 402-761-3288 MIDWEST MACHINERY PAGE 11/54

**Mid West Fabricating Company**
Rockmill Division
3115 West Fair Avenue
Lancaster, OH 43130
(740) 681-4411

## Lab Test Report

| | |
|---|---|
| Date: | 24-Sep-08 |
| Part Number: | 10-6 |
| Description: | 10" POST BOLT W/6" THRD |
| Lot Number: | 85217 |
| Customer: | Trinity |
| Test Type: | Permiscope |
| Heat Number: | 7261611 |
| Processor: | Columbus |
| Testing Standard: | ASTM=A153-A153/98 |
| Requirement: | 1.77 Mil |
| Sample Qty: | 20 |
| Disposition: | Ship |
| Ship ID: | X99 |

### Data Results

| | |
|---|---|
| Sample 1: | 2.15 |
| Sample 2: | 2.82 |
| Sample 3: | 3.38 |
| Sample 4: | 2.16 |
| Sample 5: | 2.88 |
| Sample 6: | 2.17 |
| Sample 7: | 2.54 |
| Sample 8: | 2.01 |
| Sample 9: | 2.17 |
| Sample 10: | 2.47 |
| Sample 11: | 3.10 |
| Sample 12: | 2.40 |
| Sample 13: | 4.00 |
| Sample 14: | 2.79 |
| Sample 15: | 3.50 |
| Sample 16: | 3.25 |
| Sample 17: | 3.18 |
| Sample 18: | 2.73 |
| Sample 19: | 2.82 |
| Sample 20: | 3.22 |
| Average: | 2.79 |

✓ Conformance

Non-Conformance

Performed By: D.Smith

This report shall not be reproduced, except in full, without the written approval of Mid West Fabricating Company's Quality Department.

Figure A-17. 10-in. (254-mm) Long Post Bolt Material Specifications, Test No. MGSWP-1

06/04/2009 16:36 402-761-3288 MIDWEST MACHINERY

**Mid West Fabricating Company**
**Rockmill Division**
3115 West Fair Avenue
Lancaster, OH 43130
(740) 681-4411

## Lab Test Report

| | |
|---|---|
| *Date:* | 24-Sep-08 |
| *Part Number:* | 10-6 |
| *Description:* | 10" POST BOLT W/6" THRD |
| *Lot Number:* | 85217 |
| *Customer:* | Trinity |
| *Test Type:* | Permiscope |
| *Heat Number:* | 7261611 |
| *Processor:* | Columbus |
| *Testing Standard:* | ASTM=A153-A153/98 |
| *Requirement:* | 1.77 Mil |
| *Sample Qty:* | 10 |
| *Disposition:* | Ship |
| *Ship ID:* | X99 |

### Data Results

| | |
|---|---|
| *Sample 1:* | 2.19 |
| *Sample 2:* | 2.68 |
| *Sample 3:* | 2.29 |
| *Sample 4:* | 1.99 |
| *Sample 5:* | 3.09 |
| *Sample 6:* | 3.26 |
| *Sample 7:* | 2.39 |
| *Sample 8:* | 3.12 |
| *Sample 9:* | 3.72 |
| *Sample 10:* | 2.82 |
| *Sample 11:* | 0.00 |
| *Sample 12:* | 0.00 |
| *Sample 13:* | 0.00 |
| *Sample 14:* | 0.00 |
| *Sample 15:* | 0.00 |
| *Sample 16:* | 0.00 |
| *Sample 17:* | 0.00 |
| *Sample 18:* | 0.00 |
| *Sample 19:* | 0.00 |
| *Sample 20:* | 0.00 |
| *Average:* | 2.76 |

✓ Conformance

Non-Conformance

*Performed By:* D.Smith

This report shall not be reproduced, except in full, without the written approval of Mid West Fabricating Company's Quality Department.

Figure A-18. 10-in. (254-mm) Long Post Bolt Material Specifications, Test No. MGSWP-1

06/04/2009 16:36 402-761-3288 MIDWEST MACHINERY

**Mid West Fabricating Company**
Rockmill Division
3115 West Fair Avenue
Lancaster, OH 43130
(740) 681-4411

## Lab Test Report

| | |
|---|---|
| Date: | 24-Sep-08 |
| Part Number: | 10-6 |
| Description: | 10" POST BOLT W/6" THRD |
| Lot Number: | 85217 |
| Customer: | Trinity |
| Test Type: | Rockwell |
| Heat Number: | 7261611 |
| Processor: | Columbus |
| Testing Standard: | ASTM=E18-98 |
| Requirement: | 69-100 "B" |
| Sample Qty: | 5 |
| Disposition: | Scrap |
| Ship ID: | |

**Data Results**

| | |
|---|---|
| Sample 1: | 85.20 |
| Sample 2: | 86.80 |
| Sample 3: | 86.40 |
| Sample 4: | 85.00 |
| Sample 5: | 85.60 |
| Sample 6: | 0.00 |
| Sample 7: | 0.00 |
| Sample 8: | 0.00 |
| Sample 9: | 0.00 |
| Sample 10: | 0.00 |
| Sample 11: | 0.00 |
| Sample 12: | 0.00 |
| Sample 13: | 0.00 |
| Sample 14: | 0.00 |
| Sample 15: | 0.00 |
| Sample 16: | 0.00 |
| Sample 17: | 0.00 |
| Sample 18: | 0.00 |
| Sample 19: | 0.00 |
| Sample 20: | 0.00 |
| Average: | 85.80 |

✓ Conformance

Non-Conformance

Performed By: D.Smith

This report shall not be reproduced, except in full, without the written approval of Mid West Fabricating Company's Quality Department.

Figure A-19. 10-in. (254-mm) Long Post Bolt Material Specifications, Test No. MGSWP-1

06/04/2009 16:36 402-761-3288 MIDWEST MACHINERY

**Mid West Fabricating Company**
Rockmill Division
3115 West Fair Avenue
Lancaster, OH 43130
(740) 681-4411

## Lab Test Report

| | |
|---|---|
| *Date:* | 24-Sep-08 |
| *Part Number:* | 10-6 |
| *Description:* | 10" POST BOLT W/6" THRD |
| *Lot Number:* | 88217 |
| *Customer:* | Trinity |
| *Test Type:* | Rockwell |
| *Heat Number:* | 7261611 |
| *Processor:* | Columbus |
| *Testing Standard:* | ASTM-F606-95B |
| *Requirement:* | 13,590 lbf |
| *Sample Qty:* | 5 |
| *Disposition:* | Scrap |
| *Ship ID:* | |

### Data Results

| | |
|---|---|
| *Sample 1:* | 16,850.00 |
| *Sample 2:* | 17,370.00 |
| *Sample 3:* | 17,190.00 |
| *Sample 4:* | 17,500.00 |
| *Sample 5:* | 17,300.00 |
| *Sample 6:* | 0.00 |
| *Sample 7:* | 0.00 |
| *Sample 8:* | 0.00 |
| *Sample 9:* | 0.00 |
| *Sample 10:* | 0.00 |
| *Sample 11:* | 0.00 |
| *Sample 12:* | 0.00 |
| *Sample 13:* | 0.00 |
| *Sample 14:* | 0.00 |
| *Sample 15:* | 0.00 |
| *Sample 16:* | 0.00 |
| *Sample 17:* | 0.00 |
| *Sample 18:* | 0.00 |
| *Sample 19:* | 0.00 |
| *Sample 20:* | 0.00 |
| *Average:* | 17,242.00 |

✓ Conformance

Non-Conformance

*Performed By:* D.Smith

This report shall not be reproduced, except in full, without the written approval of Mid West Fabricating Company's Quality Department.

Figure A-20. 10-in. (254-mm) Long Post Bolt Material Specifications, Test No. MGSWP-1

10-05-09;04:15PM;Bennett-Bolt-Works Midwest Machinery ;3156893999 # 5/ 10

**INSPECTION CERTIFICATE**

**ROCKFORD BOLT & STEEL CO.**
**126 MILL STREET**
**ROCKFORD, IL 61101**
**815-968-0514 FAX# 815-968-3111**

**CUSTOMER NAME:** BENNETT BOLT WORKS

**CUSTOMER P.O. :** 6005874

**INVOICE #:** 941845 **DATE SHIPPED:** 7/24/09

**LOT #:** 19934

**SPECIFICATION:** ASTM A307, GRADE A MILD CARBON STEEL BOLTS

| TENSILE RESULTS: | SPECIFICATION | ACTUAL | | | |
|---|---|---|---|---|---|
| | 60,000 min. | 76,513 | 75,053 | 77,517 | 76,876 |
| | | 76,796 | 74,699 | 77,628 | 76,938 |

| HARDNESS RESULTS: | SPECIFICATION | ACTUAL | | | |
|---|---|---|---|---|---|
| | 100 MAX | 81.22 | 86.60 | 86.96 | 81.62 |
| | | 81.80 | 85.25 | 87.10 | 81.00 |

**COATING:** ASTM SPECIFICATION F2329 HOT DIP GALVANIZE

**STEEL SUPPLIER:** NUCOR, NUCOR, NUCOR, NUCOR

**HEAT NO.** 848653, 749237, 849289, 846672

**QUANTITY AND DESCRIPTION:**

600 PCS 5/8" X 22" GUARD RAIL BOLT

WE HEREBY CERTIFY THE ABOVE BOLTS HAVE BEEN MANUFACTURED BY ROCKFORD BOLT AND STEEL. THE MATERIAL USED WAS MELTED AND MANUFACTURED IN THE U.S.A.. WE FURTHER CERTIFY THAT THIS DATA IS A TRUE REPRESENTATION OF INFORMATION PROVIDED BY THE MATERIALS SUPPLIER, AND THAT OUR PROCEDURES FOR THE CONTROL OF PRODUCT QUALITY ASSURE THAT ALL ITEMS FURNISHED ON THIS ORDER MEET OR EXCEED ALL APPLICABLE TESTS, PROCESS, AND INSPECTION REQUIREMENTS PER ABOVE SPECIFICATION.

STATE OF ILLINOIS
COUNTY OF WINNEBAGO
SIGNED BEFORE ME ON THIS
27th DAY OF July 2009
Lisa A. Berg

OFFICIAL SEAL
LISA A. BERG
Notary Public - State of Illinois
My Commission Expires Dec 11, 2011

Linda Melomas 7/27/09
APPROVED SIGNATORY DATE

Figure A-21. 22-in. (559-mm) Long Post Bolt Material Specifications, Test No. MGSWP-1

10-05-09;04:15PM;Bennett-Bolt-Works Midwest Machinery ;3156893999 # 6/ 10

NUCOR BAR MILL GROUP

**KING STEEL**

**Mill Certification Details - 2/11/2009 9:43 AM**

Customer: KING STEEL
Bill of Lading #:
Chief Metallurgist : Jim Hill — Date : 1/11/2009
Heat # : 848653 — Tag # : 12172921A
Product : Wire Rod — Size : .594-19/32
Grade: 1010 — Division : Norfolk, NE
Comments : Test conform to ASTM A29, ASTM E415 and ASTM E1019-resulphurized grades.
Certificate: 0780-01 Expires: 02/28/09
Coarse Grain Practice

**Chemical Properties -Wt.%**

| C | Mn | Si | S | P | Cu | Cr | Ni | Mo |
|---|---|---|---|---|---|---|---|---|
| .12 | .54 | .16 | .034 | .010 | .21 | .05 | .08 | .02 |

**Physical Properties**

| | Tensile: 66,201 | 456 |
|---|---|---|
| | Yield: 47,546 | 328 |
| Elongation (in 8 inches): | 26 % | 26 |
| Elongation (in 2 inches): | | |

Reduction Ratio: 159:1

The testing was conducted in accordance with the requirements of this specification. All melting and manufacturing processes were performed in the United States of America.

Jim Hill
Division Metallurgist

Figure A-22. 22-in. (559-mm) Long Post Bolt Material Specifications, Test No. MGSWP-1

10-05-09;04:15PM;Bennett-Bolt-Works Midwest Machinery ;3156893999 # 7/ 10

www.kingsteelcorp.com

**From:** support@nucorbar.com [mailto:support@nucorbar.com]
**Sent:** Wednesday, January 14, 2009 2:23 PM
**To:** Sutherland, Don
**Subject:** Mill Certifications - 1/14/2009

NUCOR BAR MILL GROUP

**KING STEEL**

**Mill Certification Details - 1/14/2009 2:23 PM**

Customer: KING STEEL
Bill of Lading #:
Chief Metallurgist : Jim Hill — Date : 8/13/2008
Heat # : 749237 — Tag # : 12118840
Product : Wire Rod — Size : .594-19/32
Grade: 1010 — Division : Norfolk, NE
Comments : Test conform to ASTM A29, ASTM E415 and ASTM E1019-resulphurized grades.
Certificate: 0780-01 Expires: 12/31/08
Coarse Grain Practice

**Chemical Properties -Wt.%**

| C | Mn | Si | S | P | Cu | Cr | Ni | Mo |
|---|---|---|---|---|---|---|---|---|
| .12 | .56 | .18 | .021 | .014 | .24 | .07 | .08 | .02 |

**Physical Properties**

| | Imperial -psi | Metric -mpa |
|---|---|---|
| Tensile: | 64,790 | 447 |
| Yield: | 46,264 | 319 |
| Elongation (in 8 inches): | 25 % | 25 |
| Elongation (in 2 inches): | | |

Reduction Ratio: 159:1

The testing was conducted in accordance with the requirements of this specification. All melting and manufacturing processes were performed in the United States of America.

Jim Hill
Division Metallurgist

Figure A-23. 22-in. (559-mm) Long Post Bolt Material Specifications, Test No. MGSWP-1

10-05-09;04:15PM;Bennett-Bolt-Works Midwest Machinery ;3156893999 # 8/ 10

# Nucor Corporation

Date: 2/17/09 Heat Number: 849289

Nucor Steel Division
Post Office Box 309 Norfolk, Nebraska 68702 Phone (402) 644-0200
Mill Certification

Chemical Testing
Certificate: 0780-01
Expires: 11/30/10
*Chemical Analysis

Test conform to ASTM A29-05, ASTM E415 and ASTM E1019-resulphurized grades
Spec: 1010 Size: .594-19/32 Rounds

| | | | | | |
|---|---|---|---|---|---|
| C | .12 | P | .015 | Mo | .03 |
| Mn | .54 | Cu | .32 | Pb | .001 |
| Si | .18 | Cr | .12 | | |
| S | .026 | Ni | .11 | | |

Physical Properties

| | Imperial | | | Metric | | |
|---|---|---|---|---|---|---|
| Yield | 49,471 | ------ | psi | 341 | ------ | MPA |
| Tensile | 67,947 | | psi | 468 | | MPA |
| % Elongation | 28 | | % in 8" | 28 | | % in 203.3 mm |

Strand Cast

Reduction Ratio: 159:1
Coarse Grain Practice

KING STEEL
5225 EAST COOK ROAD
GRAND BLANC, MT 48439

Jim Hill Division Metallurgist

All Manufacturing processes, including melting have been performed in the U.S.A. Mercury, in any form, has not been used in the production or testing of this material. Welding or weld repair was not performed on this material. This material conforms to the specifications described on this document and may not be reproduced except in full, without written approval of Nucor Corporation. This product is NAFTA certified under Paragraph "B" of the NAFTA rules of origin.

FORM 10F002 *Within Our A2LA Accreditation Scope HT3000R

Figure A-24. 22-in. (559-mm) Long Post Bolt Material Specifications, Test No. MGSWP-1

10-05-09;04:15PM;Bennett-Bolt-Works Midwest Machinery ;3156893999 # 9/ 10

Nucor Bar Mill Group - Mill Certification Details Page 1 of 1

Mill Certification Details

x] Nucor Bar Mill Group

**KRUEGER & CO.**

**Mill Certification Details - 7/14/2008 5:02 PM**

Customer: KRUEGER & CO.
Bill of Lading #: 293611
Chief Metallurgist : Jim Hill Date : 7/1/2008
Heat # : 846672 Tag # : 12095061
Product : Wire Rod Size : .594-19/32
Grade: 1010 Division : Norfolk, NE
Comments : Test conform to ASTM A29, ASTM E415 and ASTM E1019-resulphurized grades. Certificate: 0780-01 Expires: 11/30/08
Coarse Grain Practice

Chemical Properties -Wt.%

| C | Mn | Si | S | P | Cu | Cr | Ni | Mo | Al | V | Nb | Ti |
|---|---|---|---|---|---|---|---|---|---|---|---|---|
| .11 | .53 | .17 | .026 | .014 | .23 | .08 | .08 | .02 | .001 | .001 | .001 | .0008 |

Physical Properties

| | Imperial -psi | Metric -mpa |
|---|---|---|
| Tensile: | 63,969 | 441 |
| Yield: | 41,456 | 286 |
| Elongation (in 8 inches): | 27 % | 27 |
| Elongation (in 2 inches): | | |
| Reduction Ratio: | 159:1 | |

The testing was conducted in accordance with the requirements of this specification. All melting and manufacturing processes were performed in the United States of America.

x]

file://C:\Documents and Settings\lmccomas\Local Settings\Temp\Ht. #846672.htm 7/14/2008

Figure A-25. 22-in. (559-mm) Long Post Bolt Material Specifications, Test No. MGSWP-1

10-05-09;04:15PM;Bennett-Bolt-Works Midwest Machinery ;3156893999 # 10/ 10

ROGERS BROTHERS GALVANIZING

HOT DIP GALVANIZING
1925 KISHWAUKEE STREET
ROCKFORD, IL 61104-5197
PHONE: 815/965-5132
FAX: 815/965-3765

ORDER NO. 63087
04/28/09
Page 1

SOLD TO
RKB
ROCKFORD BOLT & STEEL COMPANY
126 MILL STREET
ROCKFORD, IL 61101

SHIP TO
ROCKFORD BOLT & STEEL COMPANY
126 MILL STREET
ROCKFORD, IL 61101

| TERMS | SHIPPED VIA | COLLECT | PREPAID | CUSTOMER ORD. NO. | INVOICE DATE | INVOICE NO. |
|---|---|---|---|---|---|---|
| 1/2% 10-N30 | OUR TRUCK | | X | 064465 | | |

| QUANTITY | DESCRIPTION | WEIGHT | PRICE CWT/EA | AMOUNT |
|---|---|---|---|---|
| ~~4511~~ 4510 | 5/8 X 22 GUARD RAIL BOLTS 4TUBS | 7494 | | |
| 4505 | #0001-466164 JOB#19934-P | 7499 | | |
| | BLK WT 7365# | | | |
| 1 | AVG. COATING WEIGHT: 538 MILS. | | | |
| 1 | WE CERTIFY THE ABOVE SIZES & LOT#'S COMPLY W/ THE COATING, WORKMANSHIP, FINISH & APPEARANCE OF ASTM F2329. | | | |
| | WE CERTIFY THAT THE ABOVE SIZES AND LOT NUMBERS THAT WERE GALVANIZED IN OUR PLANT MEET SPECS ASTM A153 CLASS C or ASTM A123. | | | |
| | DATE: 4-29-09 | | | |
| | Q. C. DEPT. TC | | | |
| | Request Date: 05/11/09 | | | |

4tubs galv. 4-29-09

Seller represents that with respect to the production of the articles and/or the performance of the services covered by this invoice, it has fully complied with Section 12 (a) of the Fair Labor Standards Act of 1938 as amended.
ALL AGREEMENTS CONTINGENT UPON STRIKES, ACCIDENTS OR OTHER CAUSES BEYOND OUR CONTROL.
NOTICE—CLAIMS FOR LOSS OR DAMAGE MUST BE MADE WITHIN FIVE DAYS. ALL PRICES SUBJECT TO CHANGE WITHOUT NOTICE.

DUPLICATE DELIVERY RECEIPT

Figure A-26. 22-in. (559-mm) Long Post Bolt Material Specifications, Test No. MGSWP-1

06/04/2009 16:36 402-761-3288 MIDWEST MACHINERY PAGE 05/52
Apr. 21. 2009 3:44PM Trinity Industries, Inc. No. 1357 P. 31/31

**Trinity Metals Laboratory**
A DIVISION OF TRINITY INDUSTRIES
4001 IRVING BLVD. 75247 - P.O. BOX 568897
DALLAS, TX 75356-8897
Phone: 214.589.7561 FAX: 214.589.7584

MSB

NVLAP
NVLAP LAB CODE 200554-0

**Lab No: S1103344F**
CHERITY A. MASON
TRINITY HWY PRODUCTS, LLC #66
ROLLFORM
LIMA, OH 45801

Receiver Date: 11/21/2008
Heat Code:
Heat Number: 545770
PO or Work Order: Lot#: 081031N2
Test Spec: F606 ASTM METHODS
Other Information: SO#: 55-45667

Completion Date: 12/01/2008
Weld Spec:
Material Type: A 563 A
Material Size: 5/8" GR Nuts

OTHER TEST:

Seq: 1

Type: NUT PROOF LOAD — Quantity Amount: 6

SAMPLES PASSED PROOF LOADS OF 16,950 LBS.

Seq: 2

Type: HEAD MARKINGS — Quantity Amount: 0

TRN L

We certify the above results to be a true and accurate representation of the sample(s) submitted. Alteration or partial reproduction of this report will void certification. NVLAP Certificate of Accreditation effective through 12-31-09. This report may not be used to claim product certification, approval, or endorsement by NVLAP, NIST, or any agency of the federal government.

Lab Director, Michael S. Gordon, PE

Page 2 of 2

Figure A-27. Guardrail Nut Material Specifications, Test No. MGSWP-1

06/04/2009 16:36 402-761-3288 MIDWEST MACHINERY PAGE 04/52
Apr. 21. 2004 3:44PM Trinity Industries, Inc. No. 1357 P. 30/31

**Trinity Metals Laboratory**
A DIVISION OF TRINITY INDUSTRIES
4001 IRVING BLVD. 75247 - P.O. BOX 568887
DALLAS, TX 75356-8887
Phone: 214.589.7591 FAX: 214.589.7594

MSB

NVLAP
NVLAP LAB CODE 200594-0

**Lab No: 8110344F**
CHERITY A. MASON
TRINITY HWY PRODUCTS, LLC #55
ROLLFORM
LIMA, OH 45801

Received Date: 11/21/2008
Heat Code:
Heat Number: 545770
PO or Work Order: Lot#: 081031N2
Test Spec: F606 ASTM METHODS
Other Information: SO#: 55-45867

Completion Date: 12/01/2008
Weld Spec:
Material Type: A 563 A
Material Size: 5/8" GR Nuts

**HARDNESS TEST:**

Seq:1
Hardness Type: HARDNESS ROCKWELL BW
Hardness Location: SURFACE of WRENCH FLAT - A
Hardness Average: 88

| Measured Value | Measured Amt |
|---|---|
| Measured Value | 88 |
| Measured Value | 88 |

PASSED

Seq:2
Hardness Type: HARDNESS ROCKWELL BW
Hardness Location: SURFACE of WRENCH FLAT - B
Hardness Average: 89

| Measured Value | Measured Amt |
|---|---|
| Measured Value | 88 |
| Measured Value | 90 |

PASSED

Seq:3
Hardness Type: HARDNESS ROCKWELL BW
Hardness Location: SURFACE of WRENCH FLAT - C
Hardness Average: 89.5

| Measured Value | Measured Amt |
|---|---|
| Measured Value | 89 |
| Measured Value | 90 |

PASSED

Seq:4
Hardness Type: HARDNESS ROCKWELL BW
Hardness Location: SURFACE of WRENCH FLAT - D
Hardness Average: 90

| Measured Value | Measured Amt |
|---|---|
| Measured Value | 90 |
| Measured Value | 90 |

PASSED

Seq:5
Hardness Type: HARDNESS ROCKWELL BW
Hardness Location: SURFACE of WRENCH FLAT - E
Hardness Average: 92

| Measured Value | Measured Amt |
|---|---|
| Measured Value | 91 |
| Measured Value | 93 |

PASSED

We certify the above results to be a true and accurate representation of the sample(s) submitted. Alteration or partial reproduction of this report will void certification. NVLAP Certificate of Accreditation effective through 12-31-08. This report may not be used to claim product certification, approval, or endorsement by NVLAP, NIST, or any agency of the federal government.

Lab Director, Michael G. Benton, PE

Page 1 of 2

Figure A-28. Guardrail Nut Material Specifications, Test No. MGSWP-1

06/04/2009 16:36 402-761-3288 MIDWEST MACHINERY PAGE 01/02
Apr. 21. 2009 3:43PM Trinity Industries, Inc. No. 1357 P. 27/31

**TRINITY HIGHWAY PRODUCTS, LLC.**
425 E. O'CONNOR AVENUE
LIMA, OHIO 45801
419-227-1296

3340 G

**MATERIAL CERTIFICATION**

| | |
|---|---|
| CUSTOMER: STOCK | DATE: NOVEMBER 18, 2008 |
| | INVOICE #: |
| | LOT #: 081031N2 |
| PART NUMBER: 3340G | QUANTITY: 110,000 |
| DESCRIPTION: 5/8" GR NUT | DATE SHIPPED: |
| SPECIFICATIONS: ASTM A563-A/A193 | HEAT #: 545770 |

**MATERIAL CHEMISTY**

| C | MN | P | S | SI | CU | NI | CR | MO | AL | V | N | CB | SN | B | TI | NB |
|---|---|---|---|---|---|---|---|---|---|---|---|---|---|---|---|---|
| .11 | .45 | .008 | .013 | .090 | .07 | .04 | .08 | .01 | .023 | .001 | .0080 | .000 | .005 | .0001 | .001 | .001 |

**PLATING AND/OR PROTECTIVE COATING**

| | |
|---|---|
| HOT DIP GALVANIZING (OZ. PER SQ. FT.) | 1.25 AVG. |

****THIS PRODUCT WAS MANUFACTURED IN THE UNITED STATES OF AMERICA***

THE MATERIAL USED IN THIS PRODUCT WAS MELTED AND MANUFACTURED IN THE U.S.A.

WE HEREBY CERTIFY THAT TO THE BEST OF OUR KNOWLEDGE ALL INFORMATION CONTAINED HEREIN IS CORRECT.

TRINITY HIGHWAY PRODUCTS, LLC.

STATE OF OHIO, COUNTY OF ALLEN
SWORN AND SUBSCRIBED BEFORE ME
THIS 18TH DAY OF NOVEMBER 2008
NOTARY PUBLIC

425 E. O'CONNOR AVENUE LIMA, OHIO 45801 419-227-1296

Figure A-29. Guardrail Nut Material Specifications, Test No. MGSWP-1

PAGE 02/02

MIDWEST MACHINERY

08/04/2009 16:36 402-761-3288 Trinity Industries, Inc. No. 1357 P. 28/31
Apr. 21. 2009 3:43PM

JUN-05-2008 THU 11:20 AM CHARTER ROLLING Q/C DEPT +1 262 268 2554 P. 05

FAX

CHARTER STEEL

A Division of
Charter Manufacturing Company, Inc.

1650 Cold Springs Road
Saukville, Wisconsin 53080
(262) 268-2400
1-800-437-8789
FAX (262) 268-2570

CHARTER STEEL TEST REPORT
Reverse Has Text And Codes

Trinity Highway Prod, LLC
428 E. O Connor Ave
Lima,OH 45801.
Attn: Attn: Sue Hostine

| | |
|---|---|
| [illegible] | 127698 |
| [illegible] | 1009448 |
| [illegible] | 273108 |
| [illegible] | 645770 |
| [illegible] | 357211 |
| [illegible] | 1010 A AK FG BHO |
| [illegible] | NR |
| [illegible] | 1-7/32 |

I hereby certify that the material described herein has been manufactured in accordance with the specifications and standards listed below and on the reverse side, and that it satisfies these requirements.

Test Results of Heat Lot# 645770

Lab Code: 7300

| Chemistry | C | MN | P | S | SI | NI | CR | MO | CU | SN | V |
|---|---|---|---|---|---|---|---|---|---|---|---|
| Wt% | 0.11 | 0.45 | 0.008 | 0.012 | 0.030 | 0.04 | 0.08 | 0.01 | 0.07 | 0.005 | 0.001 |

| AL | N | B | TI | NB |
|---|---|---|---|---|
| 0.020 | 0.0080 | 0.0001 | 0.001 | 0.001 |

CHEM. DEVIATION EXT.-GREEN = NR

Test Results of Rolling Lot # 357211

| | # of Tests | Min Value | Max Value | Mean Value | |
|---|---|---|---|---|---|
| ROCKWELL B (HRBW) | 2 | 81 | 82 | 81 | BB LAS = 0288-82 |
| ROCKWELL C (HRC) | 0 | 0 | 0 | 0 | RC LAS = NR |

QC DEVIATION EXT.-GREEN = NR

Test Results of Processing Lot #

QC DEVIATION EXT.-PROCESSED = NR

Specifications: Manufactured per Charter Steel Quality Manual Rev 8, 12-05-07
Meets customer specifications with any exceptions Charter Steel accepters for the following customer documents:
Customer Document = Revision = Dated =

Additional Comments: MELTED AND MANUFACTURED IN THE USA

Charter Steel
Saukville, WI, USA

Fax number: (419) 222-7388 Rem: Lead1,Mail0,Fax1,Email1

Testing Laboratory

Janice Bernard
Manager of Quality Assurance
08/04/2008

Figure A-30. Guardrail Nut Material Specifications, Test No. MGSWP-1

PAGE 03/52

MIDWEST MACHINERY

16/04/2009 16:36 402-761-3288 No. 1357 P. 29/31

Apr. 21. 2009 3:43PM Trinity Industries, Inc.

JUN-05-2008 THU 11:23 AM CHARTER ROLLING O/C DEPT +1 262 286 2654 P. 14

The following statements are applicable to the material described on the front of this Test Report.

1. Except as noted, the steel supplied for this order was melted, rolled and processed in the United States.
2. Mercury was not used during the manufacture of this product; nor was the steel contaminated with mercury during processing.
3. Unless directed by the customer, there are no welds in any of the coils produced for this order.
4. The laboratory that generated the analytical or test results can be identified by the following key:

| Certificate Number | Lab Code | Laboratory | | Address |
|---|---|---|---|---|
| 0358-01 | 7388 | CSMD | Charter Steel Melting Division | 1658 Cold Springs Road, Saukville, WI 53080 |
| 0358-02 | 8171 | CSRD/ CSPD | Charter Steel Rolling/ Processing Division | 1658 Cold Springs Road, Saukville, WI 53080 |
| 0358-03 | 123633 | P4 | Charter Steel Ohio Processing Division | 6255 US Highway 23, Risingsun, OH 43457 |
| 0358-04 | 125544 | CSC | Charter Steel Cleveland | 4300 E. 49th St., Cuyahoga Heights, OH 44125-1004 |
| 0358-05 | 128003 | CSDT | Charter Steel Detroit | 23860 Sherwood Ave, Center Line, MI 48015 |
| " | " | -- | Subcontracted test performed by laboratory not in Charter Steel system | |

5. When run by a Charter Steel laboratory, the following tests were performed according to the latest revisions of the specifications listed below, as noted in the Charter Steel Laboratory Quality Manual:

| Test | Possible Laboratory | Specification |
|---|---|---|
| Chemistry Analysis | CSMD, CSC | ASTM E415; ASTM E1019 |
| X-ray Fluorescence Stainless and Alloy Steel | CSC | ASTM E572 |
| Macroetch | CSMD, CSC | ASTM E381 |
| Hardenability (Jominy) | CSMD, CSC | ASTM A255; SAE J406; JIS G0561 |
| Grain Size | CSMD | ASTM E112 |
| Tensile Test | CSRD/CSPD, P4, CSC, CSDT | ASTM E8; ASTM A370 |
| Rockwell Hardness | CSMD, CSRD/CSPD, P4, CSC, CSDT | ASTM E18; ASTM A370 |
| Microstructure (spheroidization) | CSRD/CSPD, P4 | ASTM A892 |
| Inclusion Content (Methods A, B) | CSRD/CSPD, CSC | ASTM E45 |

Charter Steel has been accredited to perform all of the above tests by the American Association for Laboratory Accreditation (A2LA). These accreditations expire 01/31/09

All other test results associated with a Charter Steel laboratory that appear on the front of this report, if any, were performed according to documented procedures developed by Charter Steel and are not accredited by A2LA.

6. The test results on the front of this report are the true values measured on the samples taken from the production lot. They do not apply to any other sample.
7. This test report cannot be reproduced or distributed except in full without the written permission of Charter Steel. The primary customer whose name and address appear on the front of this form may reproduce this test report, subject to the following restrictions:
   - It may be distributed only to their customers
   - Both sides of all pages must be reproduced in full
8. This certification is given subject to the terms and conditions of sale provided in Charter Steel's acknowledgment (designated by our Sales Order number) to the customer's purchase order. Both Order numbers appear on the front page of this Report.
9. Where the customer has provided a specification, the results on the front of this test report conform to that specification unless otherwise noted on this test report.

Figure A-31. Guardrail Nut Material Specifications, Test No. MGSWP-1

05/04/2009 16:36 402-761-3288

TRINITY HIGHWAY PRODUCTS, LLC.
425 E. O'CONNOR AVENUE
LIMA, OHIO 45801
419-227-1296

MATERIAL CERTIFICATION

| | |
|---|---|
| CUSTOMER: STOCK | DATE: JANUARY 2, 2008 |
| | INVOICE #: |
| | LOT #: 961229B |
| PART NUMBER: 3380G | QUANTITY: 103,182 |
| DESCRIPTION: 5/8" X 1 ½ HH BOLT | DATE SHIPPED: |
| SPECIFICATIONS: ASTM A307-A/A153 | HEAT #: 443270 & 446650 |

MATERIAL CHEMISTY

| C | MN | P | S | SI | CU | NI | CR | MO | AL | V | N | CB | SN | B | TI | NB |
|---|---|---|---|---|---|---|---|---|---|---|---|---|---|---|---|---|
| .09 | .38 | .006 | .009 | .100 | .09 | .06 | .06 | .02 | .032 | .001 | .0060 | .000 | .005 | .0001 | .001 | .001 |
| .09 | .39 | .007 | .010 | .090 | .08 | .05 | .07 | .02 | .023 | .001 | .0070 | .000 | .006 | .0001 | .001 | .001 |

PLATING AND/OR PROTECTIVE COATING

| | |
|---|---|
| HOT DIP GALVANIZING (OZ. PER SQ. FT.) | 1.25 AVG. |

****THIS PRODUCT WAS MANUFACTURED IN THE UNITED STATES OF AMERICA****

THE MATERIAL USED IN THIS PRODUCT WAS MELTED AND MANUFACTURED IN THE U.S.A.

WE HEREBY CERTIFY THAT TO THE BEST OF OUR KNOWLEDGE ALL INFORMATION CONTAINED HEREIN IS CORRECT.

TRINITY HIGHWAY PRODUCTS, LLC.

STATE OF OHIO, COUNTY OF ALLEN
SWORN AND SUBSCRIBED BEFORE ME
THIS 2ND DAY OF JANUARY, 2008

NOTARY PUBLIC

425 E. O'CONNOR AVENUE LIMA, OHIO 45801 419-227-1296

Figure A-32. 1½-in. (38-mm) Long Hex Bolt Material Specifications, Test No. MGSWP-1

06/04/2009 16:36 402-761-3288 MIDWEST MACHINERY

From TRINITY METALS LABORATORY To CHERITY A MASON 12:29:54 PM 11/20/2007 Page 9 of 12

**TRINITY METALS LABORATORY**

Page 1 of 1

A DIVISION OF TRINITY INDUSTRIES
4001 IRVING BLVD 75247 - P.O. BOX 568887
DALLAS, TX 75356-8887
Phone: 214-589-7591 FAX: 214-589-7594

LABORATORY TEST CERTIFICATE

Lab. No.: **7110450F**

CHERITY A. MASON
TRINITY HWY PRODUCTS, LLC #55
ROLLFORM - 425 E. O'CONNOR AVENUE

LIMA, OH 45801

Received Date : 11/19/2007
Heat Code :
Heat Number : 443278 & 446650
P.O. or Work Order : LOT#: 0612258
Other Information : SO#: 55-39193
Test Specification : F606-ASTM METHODS
Material Type : A 307 A
Material Size : 5/8" x 1-1/2" HHS
Weld Specification :
Completion Date : 11-20-2007

**TESTS/ADDITIONAL INFORMATION**

Test Type/Additional Information: HARDNESS ROCKWELL BW — Quantity : 5.00
Findings: A) 91 - 89 - 90 - 90
B) 91 - 91 - 91 - 91
C) 91 - 90 - 91 - 90
D) 88 - 88 - 89 - 88
E) 92 - 91 - 91 - 91

Test Type/Additional Information: HEAD MARKINGS — Quantity : 0.00
Findings: TRN USA 307A

We certify the above results to be a true and accurate representation of the sample(s) submitted. Alteration or partial reproduction of this report will void certification.

LAB DIRECTOR : Michael S. Beaton, P.E.

Date : 11/20/2007

Figure A-33. 1½-in. (38-mm) Long Hex Bolt Material Specifications, Test No. MGSWP-1

06/04/2009 16:36 402-761-3288 MIDWEST MACHINERY PAGE 33/52

CHARTER STEEL SALE

CHARTER STEEL

A Division of
Charter Manufacturing Company, Inc.

FILE

08:38:02 10-08-2006 1/6

1658 Cold Springs Road
Saukville, Wisconsin 53080
(262) 268-2400
1-800-437-8789
FAX (262) 268-2570

CHARTER STEEL TEST REPORT
Reverse Has Text And Codes

Trinity Industries, Inc.
P.O. Box 568887
2525 Stemmons Freeway
Dallas,TX 75356-8287
Attn: Attn: Cheri/Carol

| | |
|---|---|
| [illegible] | 122335M |
| [illegible] | 100941B |
| [illegible] | 223972 |
| [illegible] | 443270 |
| [illegible] | 350176 |
| [illegible] | 1010 A AK FG RHQ |
| [illegible] | HR |
| [illegible] | 41/64 |

I hereby certify that the material described herein has been manufactured in accordance with the specifications and standards listed below and on the reverse side, and that it satisfies those requirements.

Test Results of Heat Lot# 443270

Lab Code: 7398

| Chemistry | C | MN | P | S | SI | NI | CR | MO | CU | SN | V |
|---|---|---|---|---|---|---|---|---|---|---|---|
| W/R | 0.09 | 0.38 | 0.008 | 0.009 | 0.100 | 0.05 | 0.05 | 0.02 | 0.09 | 0.005 | 0.001 |

| AL | N | B | TI | NB |
|---|---|---|---|---|
| 0.032 | 0.0050 | 0.0001 | 0.001 | 0.001 |

CHEM. DEVIATION EXT.- GREEN = N/R

Test Results of Rolling Lot # 350176

| | # of Tests | Min Value | Max Value | Mean Value | |
|---|---|---|---|---|---|
| ROCKWELL B (HRBW) | 2 | 63 | 64 | 63 | RG LAB = 0358-02 |
| ROCKWELL C (HRC) | 0 | 0 | 0 | 0 | RG LAB = N/R |

QC DEVIATION EXT.- GREEN = N/R

Test Results of Processing Lot #

QC DEVIATION EXT.- PROCESSED = N/R

Specifications: Meets customer specifications with any applicable Charter Steel exceptions for the following customer documents:
Customer Document = Revision = Dated =

Additional Comments: MELTED AND MANUFACTURED IN THE USA

Charter Steel
Saukville, WI, USA

Fax number: (419) 227-9999 Rem: Load0,Mell0,Fax0

Page 1 of 1

Tim Leahy
Manager of Quality Assurance
10/08/2006

Figure A-34. 1½-in. (38-mm) Long Hex Bolt Material Specifications, Test No. MGSWP-1

06/04/2009 16:36 402-761-3288 MIDWEST MACHINERY

38 2570 CHARTER STEEL SALE 15:04:15 10-19-2006 1 /5

FAX

CHARTER STEEL

A Division of
Charter Manufacturing Company, Inc

**CHARTER STEEL TEST REPORT**
Reverse Has Text And Codes

1658 Cold Springs Road
Saukville, Wisconsin 53080
(262) 268-2400
1-800-437-8789
FAX (262) 268-2570

Trinity Industries, Inc.
P.O. Box 568987
2525 Stemmons Freeway
Dallas, TX 75356-8987
Attn: Attn: Cheri/Carol

| | |
|---|---|
| Order PO# | 122576M |
| Cust Part # | 1009418 |
| Charter Sales Order | 225779 |
| Heat # | 446650 |
| Ship Lot # | 351188 |
| Grade | 1010 A AK FG RHO |
| Product | HR |
| Finish Size | 41/64 |

I hereby certify that the material described herein has been manufactured in accordance with the specifications and standards listed below and on the reverse side, and that it satisfies those requirements.

Test Results of Heat Lot# 446650

Lab Code: 7388

| Chemistry Wt% | C | MN | P | S | SI | NI | CR | MO | CU | SN | V |
|---|---|---|---|---|---|---|---|---|---|---|---|
| | 0.09 | 0.39 | 0.007 | 0.010 | 0.090 | 0.05 | 0.07 | 0.02 | 0.09 | 0.006 | 0.001 |
| | AL | N | B | TI | NB | | | | | | |
| | 0.023 | 0.0070 | 0.0001 | 0.001 | 0.001 | | | | | | |

CHEM. DEVIATION EXT.-GREEN = N/R

Test Results of Rolling Lot # 351188

| | # of Tests | Min Value | Max Value | Mean Value | |
|---|---|---|---|---|---|
| ROCKWELL B (HRBW) | 3 | 62 | 62 | 62 | RB LAB = 0558-02 |
| ROCKWELL C (HRC) | 0 | 0 | 0 | 0 | RC LAB = N/R |

QC DEVIATION EXT.-GREEN = N/R

Test Results of Processing Lot #

QC DEVIATION EXT.-PROCESSED = N/R

Specifications: Meets customer specifications with any applicable Charter Steel exceptions for the following customer documents:
Customer Document = Revision = Dated =

Additional Comments: MELTED AND MANUFACTURED IN THE USA

Charter Steel
Saukville, WI, USA

ACCREDITED

Tim Leahy
Manager of Quality Assurance
10/19/2006

Fax number: (419) 227-9939 Rem: Lead1,Mail0,Fax1 Page 1 of 1

Figure A-35. 1½-in. (38-mm) Long Hex Bolt Material Specifications, Test No. MGSWP-1

06/04/2009 16:36 402-761-3288 MIDWEST MACHINERY PAGE 35/52

262 268 2570 CHARTER STEEL SALE 15:05:58 10-19-2005 5/8

The following statements are applicable to the material described on the front of this Test Report:

1. Except as noted, the steel supplied for this order was melted, rolled and processed in the United States.
2. Mercury was not used during the manufacture of this product; nor was the steel contaminated with mercury during processing.
3. Unless directed by the customer, there are no welds in any of the coils produced for this order.
4. The laboratory that generated the analytical or test results can be identified by the following key:

| Certificate Number | Lab Code | Laboratory | | Address |
|---|---|---|---|---|
| 0358-01 | 7386 | CSMD | Charter Steel Melting Division | 1658 Cold Springs Road, Saukville, WI 53080 |
| 0358-02 | 8171 | CSRD/ CSPD | Charter Steel Rolling/ Processing Division | 1658 Cold Springs Road, Saukville, WI 53080 |
| 0358-03 | 123833 | P4 | Charter Steel Ohio Processing Division | 8255 US Highway 23, Risingsun, OH 43457 |
| 0358-04 | 125544 | CSC | Charter Steel Cleveland | 4900 E. 49th St., Cuyahoga Heights, OH 44125-1004 |
| * | * | -- | Subcontracted test performed by laboratory not in Charter Steel system | |

5. When run by a Charter Steel laboratory, the following tests were performed according to the latest revisions of the specifications listed below, as noted in the Charter Steel Laboratory Quality Manual:

| Test | Possible Laboratory | Specification |
|---|---|---|
| Chemistry Analysis | CSMD | ASTM E415; ASTM E1019 |
| Macroetch | CSMD | ASTM E381 |
| Hardenability (Jominy) | CSMD | ASTM A255; JIS G0561 |
| Grain Size | CSMD | ASTM E112 |
| Tensile Test | CSRD/CSPD, P4, CSC | ASTM E8; ASTM A370 |
| Rockwell Hardness | CSRD/CSPD, P4, CSC | ASTM E18; ASTM A370 |
| Microstructure (spheroidization) | CSRD/CSPD, P4 | ASTM A892 |
| Cleanliness | CSRD/CSPD, CSC | ASTM E45 |

Charter Steel has been accredited to perform all of the above tests by the American Association for Laboratory Accreditation (A2LA). These accreditations expire 01/31/07

All other test results associated with a Charter Steel laboratory that appear on the front of this report, if any, were performed according to documented procedures developed by Charter Steel and are not accredited by A2LA.

6. The test results on the front of this report are the true values measured on the samples taken from the production lot. They do not apply to any other sample.
7. This test report cannot be reproduced or distributed except in full without the written permission of Charter Steel. The primary customer whose name and address appear on the front of this form may reproduce this test report, subject to the following restrictions:
   - It may be distributed only to their customers
   - Both sides of all pages must be reproduced in full
8. This certification is given subject to the terms and conditions of sale provided in Charter Steel's acknowledgment (designated by our Purchase Order number) to the customer's purchase order. Both Purchase Order numbers appear on the front page of this Report.
9. Where the customer has provided a specification, the results on the front of this test report conform to that specification unless otherwise noted on this test report.

ACCREDITED

Figure A-36. 1½-in. (38-mm) Long Hex Bolt Material Specifications, Test No. MGSWP-1

425 E. O'Connor
Lima, OH

PAGE 44/52

Customer: MIDWEST MACH.& SUPPLY CO.
P. O. BOX 81097

LINCOLN, NE 68501-1097

Sales Order: 1093497
Customer PO: 2030
BOL # 43073
Document # 1

Print Date: 6/30/08
Project: RESALE
Shipped To: NE
Use State: KS

Trinity Highway Products, LLC

Certificate Of Compliance For Trinity Industries, Inc. ** SLOTTED RAIL TERMINAL **

NCHRP Report 350 Compliant

MIDWEST MACHINERY

| Pieces | Description |
|---|---|
| 32 | 12/12'6/S SRT-1 |
| 32 | 12/25'0/SPEC/S SRT-2 |
| 32 | 3/16X12.5X16 CAB ANC BRKT |
| 32 | 2" X 5 1/2" PIPE (LONG) |
| 64 | 6'0 TUBE SL/.188X8X6 |
| 32 | 5/8 X 6 X 8 BEARING PLATE |
| 32 | 12/BUFFER/ROLLED |
| 32 | CBL 3/4X6'6/DBL SWG/NOHWD |
| 640 | 5/8" RD WASHER 1 3/4 OD |
| 1,728 | 5/8" GR HEX NUT |
| 1,152 | 5/8"X1.25" GR BOLT |
| 256 | 5/8"X1.5" HEX BOLT A307 |
| 64 | 5/8"X9.5" HEX BOLT A307 |

Upon delivery, all materials subject to Trinity Highway Products , LLC Storage Stain Policy No. LG-002.

ALL STEEL USED WAS MELTED AND MANUFACTURED IN USA AND COMPLIES WITH THE BUY AMERICA ACT
ALL GUARDRAIL MEETS AASHTO M-180, ALL STRUCTURAL STEEL MEETS ASTM A36
ALL OTHER GALVANIZED MATERIAL CONFORMS WITH ASTM-123.
BOLTS COMPLY WITH ASTM A-307 SPECIFICATIONS AND ARE GALVANIZED IN ACCORDANCE WITH ASTM A-153, UNLESS OTHERWISE STATED.
NUTS COMPLY WITH ASTM A-563 SPECIFICATIONS AND ARE GALVANIZED IN ACCORDANCE WITH ASTM A-153, UNLESS OTHERWISE STATED.
1/4" DIA CABLE 6X19 ZINC COATED SWAGED END AISI C-1035 STEEL ANNEALED STUD 1" DIA ASTM 449 AASHTO M30, TYPE II BREAKING
STRENGTH – 49100 LB
State of Ohio, County of Allen. Sworn and Subscribed before me this 30th day of June, 2008

Notary Public:
Commission Expires

Trinity Highway Products, LLC
Certified By:

Figure A-37. 9½-in. (241-mm) Long Hex Bolt and ⅝-in. (16-mm) Diameter Washer Material Specifications, Test No. MGSWP-1

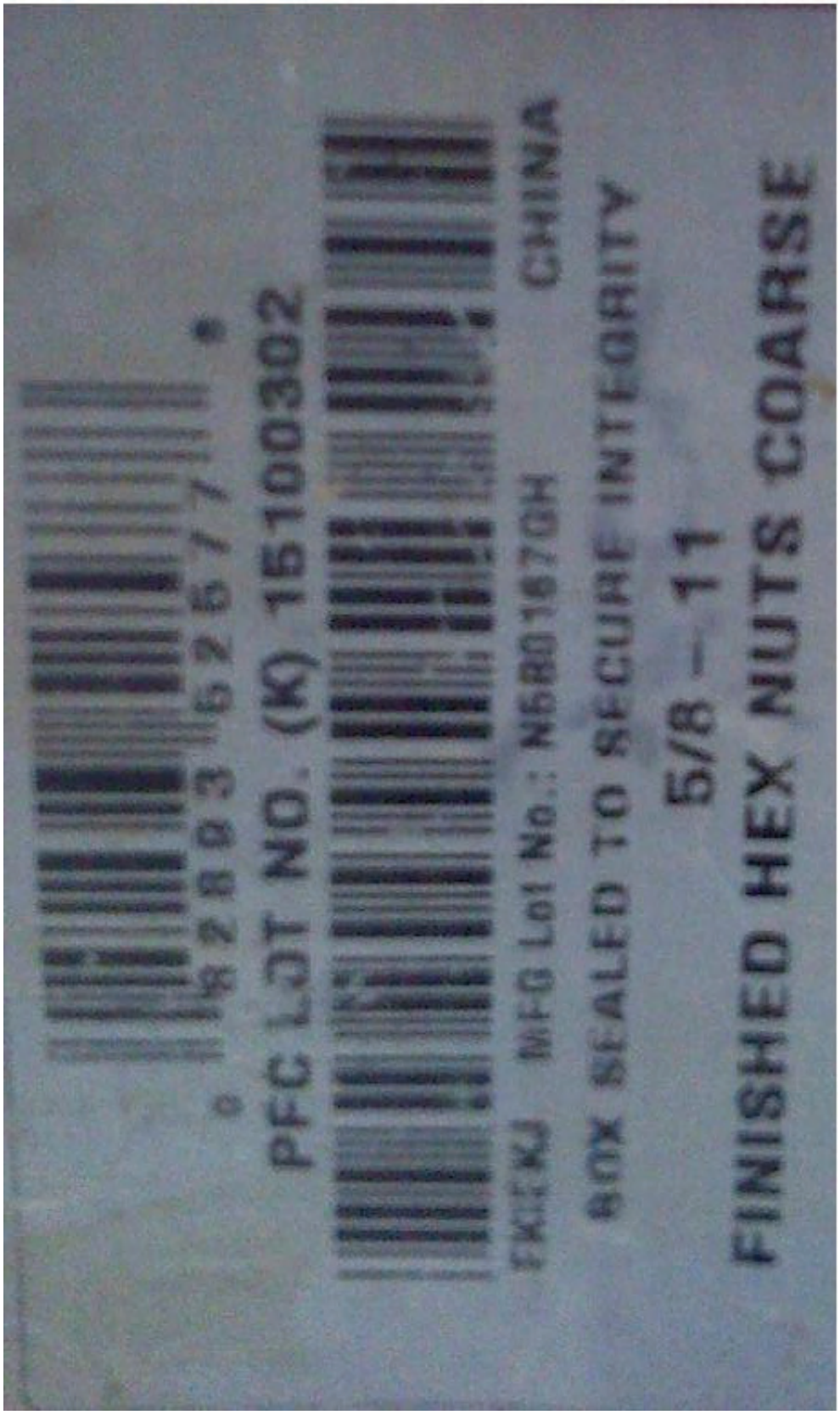


Figure A-38. ⅝-in. (16-mm) Diameter Hex Nut Material Specifications, Test No. MGSWP-1

# Appendix B. Vehicle Center of Gravity Determination

Test: MGSWP-1 Vehicle: 2270P Dodge Ram

**Vehicle CG Determination**

| VEHICLE | Equipment | Weight (lb) | Long CG (in.) | Lat CG (in.) | Vert CG (in.) | Long M (lb-in.) | Lat M (lb-in.) | Vert M (lb-in.) |
|---|---|---|---|---|---|---|---|---|
| + | Unbalasted Truck(Curb) | 4979 | 61.8087 | -0.31294 | 28.08582 | 307745.5 | -1558.13 | 139839.3 |
| + | Brake receivers/wires | 8 | 107 | 0 | 51 | 856 | 0 | 408 |
| + | Brake Frame | 3 | 36 | -18 | 26 | 108 | -54 | 78 |
| + | Brake Cylinder (Nitrogen) | 28 | 73 | 22 | 26 | 2044 | 616 | 728 |
| + | Strobe/Brake Battery | 4 | 76 | 0 | 30 | 304 | 0 | 120 |
| + | Hub | 27 | 0 | -43 | 14.75 | 0 | -1161 | 398.25 |
| + | CG Plate (EDRs) | 8 | 53 | 0 | 31 | 424 | 0 | 248 |
| - | Battery | -44 | -8 | -23 | 41 | 352 | 1012 | -1804 |
| - | Oil | -8 | 10 | 0 | 17 | -80 | 0 | -136 |
| - | Interior | -42 | 58 | 0 | 23 | -2436 | 0 | -966 |
| - | Fuel | -158 | 109 | -13 | 20 | -17222 | 2054 | -3160 |
| - | Coolant | -18 | -23 | 8 | 35 | 414 | -144 | -630 |
| - | Washer fluid | -6 | -21 | 19 | 35 | 126 | -114 | -210 |
| BALLAST | Water | 162 | 109 | -13 | 20 | 17658 | -2106 | 3240 |
| | DTS Rack | 18 | 71 | 0 | 30 | 1278 | 0 | 540 |
| | Steel Plate | 33 | 109 | 0 | 35 | 3597 | 0 | 1155 |
| | | | | | | 315168.5 | -1455.13 | 139848.6 |
| | TOTAL WEIGHT | 4994 lb | | | CG location (in.) | 63.10944 | -0.29137 | 28.00332 |

wheel base 140.5

Calculated Test Inertial Weight

| MASH Targets | Targets | CURRENT | Difference |
|---|---|---|---|
| Test Inertial Weight (lb) | 5000 ± 110 | 4994 | -6.0 |
| Long CG (in.) | 63 ± 4 | 63.11 | 0.10944 |
| Lat CG (in.) | NA | -0.29 | NA |
| Vert CG (in.) | 28 | 28.00 | 0.00332 |

Note: Long. CG is measured from front axle of test vehicle

Note: Lateral CG measured from centerline - positive to vehicle right (passenger) side

Curb Weight (lb)

| | Left | Right |
|---|---|---|
| Front | 1427 | 1362 |
| Rear | 1085 | 1105 |
| FRONT | 2789 lb | |
| REAR | 2190 lb | |
| TOTAL | 4979 lb | |

Actual test inertial weight (lb)
(from scales)

| | Left | Right |
|---|---|---|
| Front | 1409 | 1348 |
| Rear | 1111 | 1131 |
| FRONT | 2757 lb | |
| REAR | 2242 lb | |
| TOTAL | 4999 lb | |

Figure B-1. Vehicle Mass Distribution, Test No. MGSWP-1

# Appendix C. Static Soil Tests

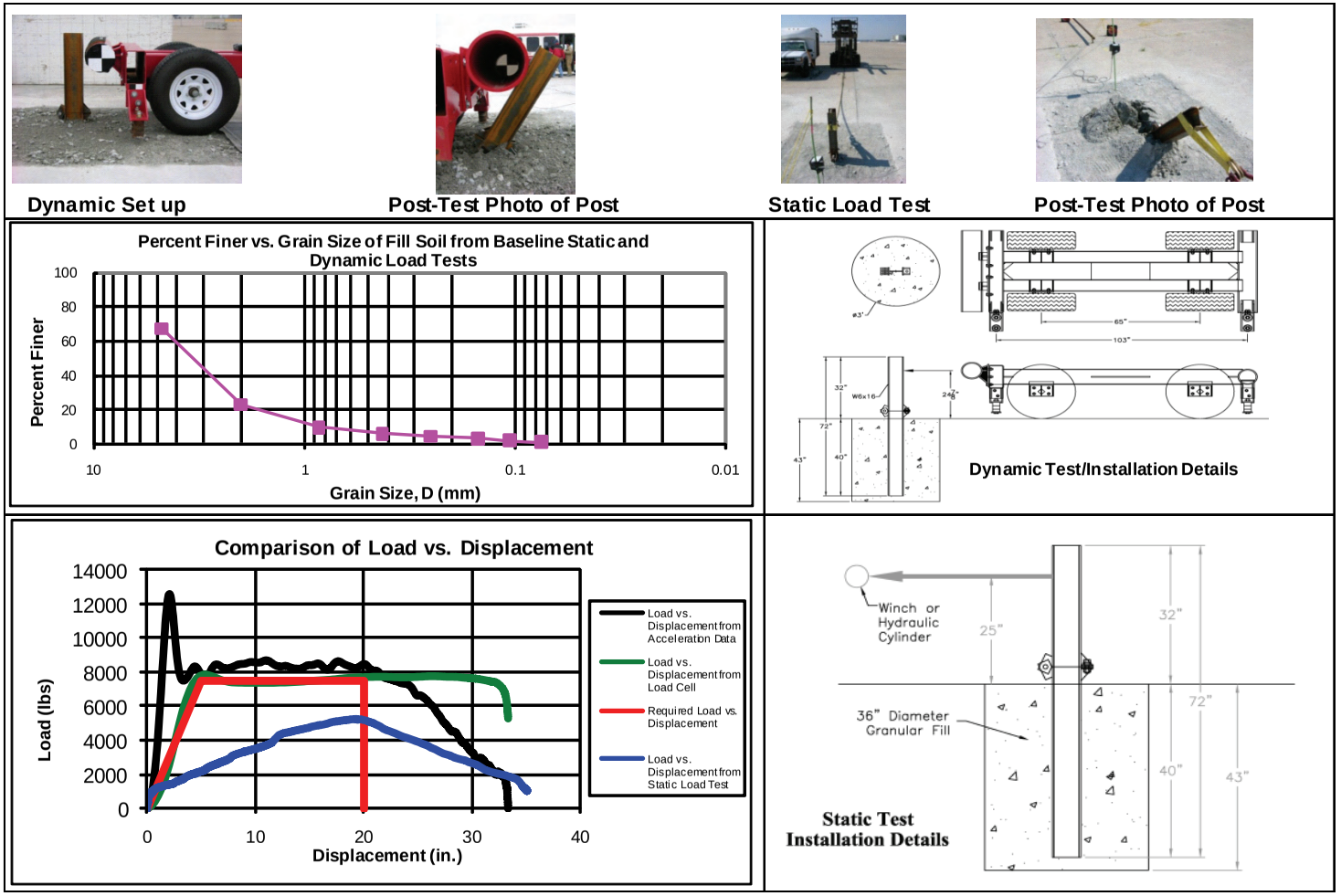


| | |
|---|---|
| **Date** | 7/7/2005 |
| **Test Facility & Site Location** | Midwest Roadside Safety Facility |
| **In situ soil description (ASTM D2487)** | Well Graded Gravel (GW) |
| **Fill material description (ASTM D2487) & sieve analysis** | Well Graded Gravel (GW) (see sieve analyses above) |
| **Description of fill placement procedure** | 6-inch lifts tamped with a pneumatic compactor |
| **Bogie Weight** | 1605 lb |
| **Impact Velocity** | 19.08 mph |

Figure C-1. Soil Strength, Initial Calibration Tests

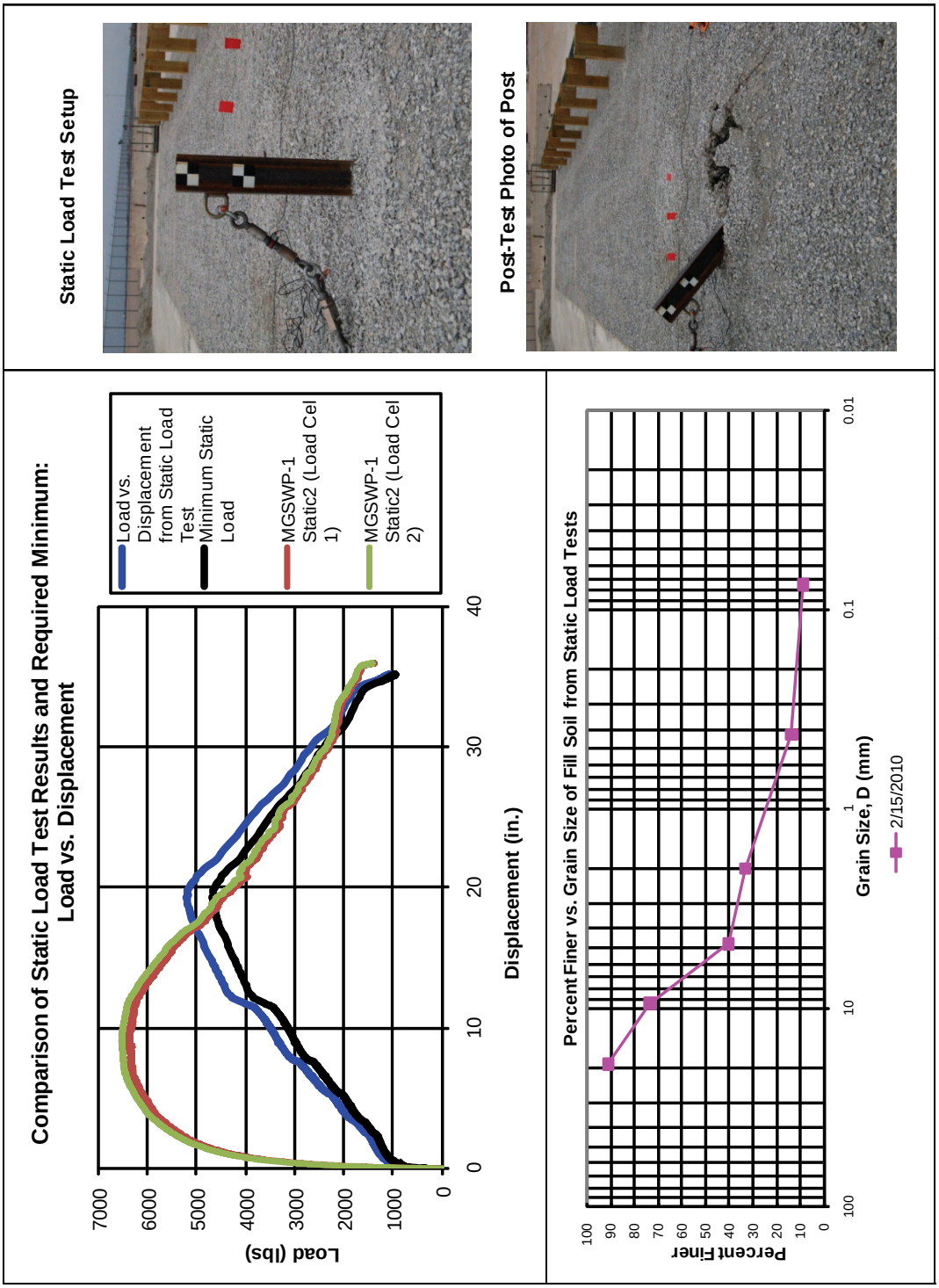


**Date**.....4/2/2010
**Test Facility & Site Location**.....Midwest Roadside Safety Facility
**In situ soil description (ASTM D2487)**.....Well Graded Gravel (GW)
**Fill material description (ASTM D2487) & sieve analysis**.....Well Graded Gravel (GW) (see sieve analyses above)
**Description of fill placement procedure**.....8-inch lifts tamped with a pneumatic compactor

Figure C-2. Static Soil Test, Test No. MGSWP-1

# Appendix D. Vehicle Deformation Records

VEHICLE PRE/POST CRUSH
FLOORPAN - SET 1

TEST: MGSWP-1
VEHICLE: 2270P Dodge Ram

Note: If impact is on driver side need to enter negative number for Y

| POINT | X (in.) | Y (in.) | Z (in.) | X' (in.) | Y' (in.) | Z' (in.) | ΔX (in.) | ΔY (in.) | ΔZ (in.) |
|---|---|---|---|---|---|---|---|---|---|
| 1 | 24.5 | 12.5 | 0 | 24.5 | 12.25 | 0 | 0 | -0.25 | 0 |
| 2 | 25.25 | 17.5 | -3.25 | 25.5 | 17.75 | -3.25 | 0.25 | 0.25 | 0 |
| 3 | 26.25 | 23.5 | -6.25 | 26.25 | 23.25 | -6.25 | 0 | -0.25 | 0 |
| 4 | 27.5 | 30.25 | -4.25 | 27.5 | 30.75 | -4.25 | 0 | 0.5 | 0 |
| 5 | 20.75 | 9.75 | -1 | 20.75 | 9.5 | -1 | 0 | -0.25 | 0 |
| 6 | 22 | 16 | -4 | 22 | 16 | -4 | 0 | 0 | 0 |
| 7 | 23.25 | 23.25 | -7.75 | 23.25 | 23.25 | -7.75 | 0 | 0 | 0 |
| 8 | 23.5 | 31 | -7.75 | 23.5 | 31 | -7.75 | 0 | 0 | 0 |
| 9 | 15.25 | 5 | -2.25 | 15.25 | 5 | -2.25 | 0 | 0 | 0 |
| 10 | 18 | 13 | -4.5 | 18 | 13 | -4.5 | 0 | 0 | 0 |
| 11 | 20.25 | 19.5 | -9.25 | 20.25 | 19.25 | -9.25 | 0 | -0.25 | 0 |
| 12 | 20.25 | 27.5 | -9.5 | 20.5 | 27.25 | -9.5 | 0.25 | -0.25 | 0 |
| 13 | 11.25 | 3.75 | -2.5 | 11.25 | 3.75 | -2.5 | 0 | 0 | 0 |
| 14 | 16.5 | 16.25 | -9.25 | 16.5 | 16 | -9.25 | 0 | -0.25 | 0 |
| 15 | 16.75 | 28.5 | -9.5 | 16.75 | 28 | -9.5 | 0 | -0.5 | 0 |
| 16 | 7.75 | 4.25 | -2.75 | 7.5 | 4.25 | -2.75 | -0.25 | 0 | 0 |
| 17 | 13.5 | 13.5 | -9.5 | 13.5 | 13 | -9.5 | 0 | -0.5 | 0 |
| 18 | 13.75 | 20.25 | -9.25 | 13.75 | 19.75 | -9.5 | 0 | -0.5 | -0.25 |
| 19 | 13.75 | 27.75 | -9.5 | 14 | 27.5 | -9.5 | 0.25 | -0.25 | 0 |
| 20 | 4.75 | 4.25 | -3 | 4.75 | 4.25 | -3 | 0 | 0 | 0 |
| 21 | 7.25 | 13.5 | -9.25 | 7.25 | 13.25 | -9.25 | 0 | -0.25 | 0 |
| 22 | 7 | 21 | -9.25 | 7 | 21 | -9.25 | 0 | 0 | 0 |
| 23 | 7.25 | 30.5 | -9.25 | 7.5 | 30.25 | -9.25 | 0.25 | -0.25 | 0 |
| 24 | 0.75 | 4.5 | -2.5 | 0.75 | 4.25 | -2.5 | 0 | -0.25 | 0 |
| 25 | 0.5 | 14.5 | -5 | 0.5 | 14.25 | -5 | 0 | -0.25 | 0 |
| 26 | 0.5 | 22.25 | -5 | 0.5 | 22.25 | -5 | 0 | 0 | 0 |
| 27 | 0.75 | 29.25 | -5.25 | 0.75 | 29 | -5 | 0 | -0.25 | 0.25 |
| 28 | | | | | | | 0 | 0 | 0 |
| 29 | | | | | | | 0 | 0 | 0 |
| 30 | | | | | | | 0 | 0 | 0 |
| 31 | | | | | | | 0 | 0 | 0 |

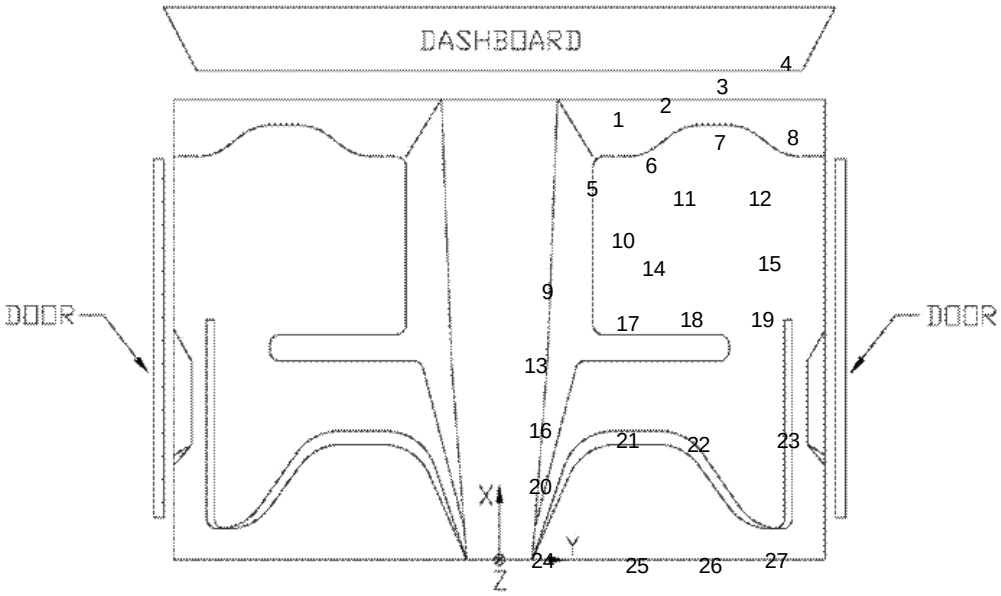


Figure D-1. Floor Pan Deformation Data – Set 1, Test No. MGSWP-1

VEHICLE PRE/POST CRUSH
FLOORPAN - SET 2

TEST: MGSWP-1
VEHICLE: 2270P Dodge Ram

Note: If impact is on driver side need to enter negative number for Y

| POINT | X (in.) | Y (in.) | Z (in.) | X' (in.) | Y' (in.) | Z' (in.) | ΔX (in.) | ΔY (in.) | ΔZ (in.) |
|---|---|---|---|---|---|---|---|---|---|
| 1 | 47 | 17.5 | 0 | 47 | 17.25 | 0 | 0 | -0.25 | 0 |
| 2 | 48.25 | 22.5 | -3 | 48.25 | 22.25 | -3 | 0 | -0.25 | 0 |
| 3 | 49.25 | 28 | -6 | 49.25 | 27.5 | -6 | 0 | -0.5 | 0 |
| 4 | 50.5 | 34.5 | -4 | 50.5 | 34.5 | -4 | 0 | 0 | 0 |
| 5 | 43.5 | 14.75 | -0.75 | 43.75 | 14.75 | -0.75 | 0.25 | 0 | 0 |
| 6 | 44.75 | 20.75 | -4 | 44.75 | 21 | -4 | 0 | 0.25 | 0 |
| 7 | 46.25 | 27.75 | -7.5 | 46.25 | 27.25 | -7.5 | 0 | -0.5 | 0 |
| 8 | 46.5 | 35.75 | -7.5 | 46.75 | 35.25 | -7.5 | 0.25 | -0.5 | 0 |
| 9 | 38.25 | 9.75 | -2.25 | 38.25 | 10 | -2.25 | 0 | 0.25 | 0 |
| 10 | 41 | 18 | -4.5 | 41 | 17.5 | -4.5 | 0 | -0.5 | 0 |
| 11 | 43.25 | 24.5 | -9.25 | 43.25 | 23.75 | -9.25 | 0 | -0.75 | 0 |
| 12 | 43.25 | 32 | -9.25 | 43.5 | 31.75 | -9.25 | 0.25 | -0.25 | 0 |
| 13 | 34 | 8.5 | -2.75 | 34 | 8.75 | -2.75 | 0 | 0.25 | 0 |
| 14 | 39.5 | 21 | -9.25 | 39.5 | 20.5 | -9.25 | 0 | -0.5 | 0 |
| 15 | 39.75 | 32.75 | -9.25 | 40 | 33 | -9.25 | 0.25 | 0.25 | 0 |
| 16 | 30.5 | 9 | -3 | 30.5 | 9.25 | -3 | 0 | 0.25 | 0 |
| 17 | 36.25 | 18.25 | -9.5 | 36.25 | 18 | -9.5 | 0 | -0.25 | 0 |
| 18 | 36.5 | 24.5 | -9.25 | 36.5 | 24.5 | -9.25 | 0 | 0 | 0 |
| 19 | 36.75 | 32.75 | -9.5 | 36.75 | 32.5 | -9.5 | 0 | -0.25 | 0 |
| 20 | 27.75 | 9.25 | -3 | 27.75 | 9.25 | -3 | 0 | 0 | 0 |
| 21 | 30.5 | 18.25 | -9.25 | 30.25 | 18.25 | -9.5 | -0.25 | 0 | -0.25 |
| 22 | 30 | 26 | -9.25 | 30 | 26 | -9.25 | 0 | 0 | 0 |
| 23 | 30.5 | 35.25 | -9.25 | 30.25 | 35.25 | -9.25 | -0.25 | 0 | 0 |
| 24 | 23.5 | 9.25 | -2.75 | 23.5 | 9.25 | -2.75 | 0 | 0 | 0 |
| 25 | 23.5 | 19.25 | -5 | 23.5 | 19.25 | -5 | 0 | 0 | 0 |
| 26 | 23.5 | 27.25 | -5 | 23.5 | 27.25 | -5 | 0 | 0 | 0 |
| 27 | 23.75 | 34 | -5 | 23.75 | 34 | -5 | 0 | 0 | 0 |
| 28 | | | | | | | 0 | 0 | 0 |
| 29 | | | | | | | 0 | 0 | 0 |
| 30 | | | | | | | 0 | 0 | 0 |
| 31 | | | | | | | 0 | 0 | 0 |

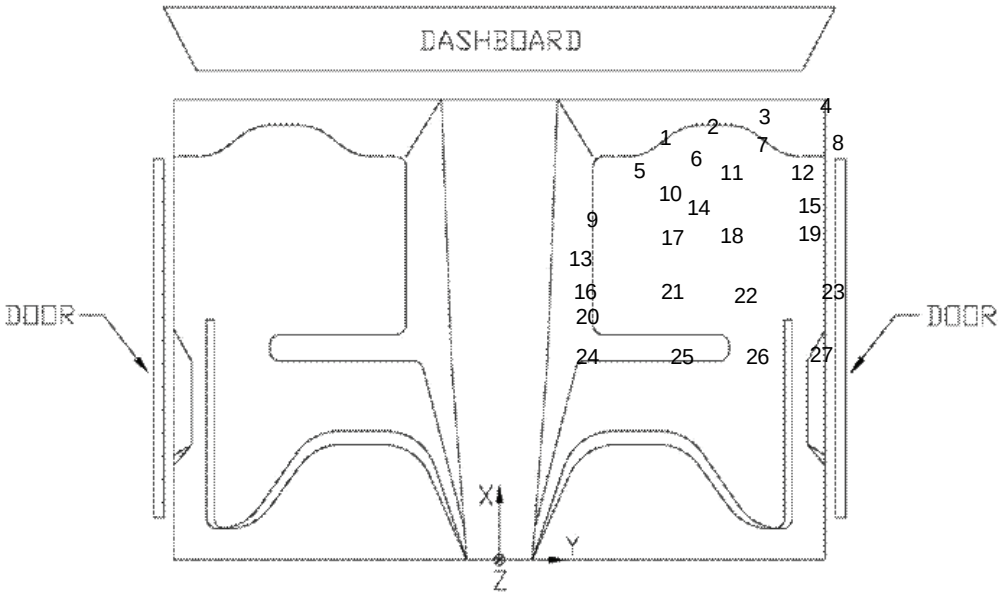


Figure D-2. Floor Pan Deformation Data – Set 2, Test No. MGSWP-1

VEHICLE PRE/POST CRUSH
INTERIOR CRUSH - SET 1

TEST: MGSWP-1
VEHICLE: 2270P Dodge Ram

Note: If impact is on driver side need to enter negative number for Y

| | POINT | X (in.) | Y (in.) | Z (in.) | X' (in.) | Y' (in.) | Z' (in.) | ΔX (in.) | ΔY (in.) | ΔZ (in.) |
|---|---|---|---|---|---|---|---|---|---|---|
| DASH | A1 | 30 | 2 | 22.25 | 30 | 2 | 22.5 | 0 | 0 | 0.25 |
| | A2 | 30 | 10 | 22 | 30 | 10.25 | 22 | 0 | 0.25 | 0 |
| | A3 | 30 | 20.25 | 21.25 | 30 | 20 | 21.5 | 0 | -0.25 | 0.25 |
| | A4 | 27.75 | 2.5 | 15.5 | 27.75 | 2.5 | 15.75 | 0 | 0 | 0.25 |
| | A5 | 27.75 | 10.25 | 15.75 | 27.75 | 10.25 | 16 | 0 | 0 | 0.25 |
| | A6 | 27.75 | 20 | 15.5 | 27.75 | 20 | 15.5 | 0 | 0 | 0 |
| SIDE PANEL | B1 | 39.25 | 23.5 | -1.5 | 39.5 | 23.25 | -1.25 | 0.25 | -0.25 | 0.25 |
| | B2 | 35 | 23.5 | -1.75 | 35.25 | 23.25 | -1.5 | 0.25 | -0.25 | 0.25 |
| | B3 | 35.5 | 23.5 | -6.75 | 35.75 | 23.25 | -6.75 | 0.25 | -0.25 | 0 |
| IMPACT SIDE DOOR | C1 | 24 | 26 | 17 | 24 | 26.25 | 17 | 0 | 0.25 | 0 |
| | C2 | 13.5 | 26 | 18 | 13.5 | 26.25 | 18 | 0 | 0.25 | 0 |
| | C3 | 3.75 | 26 | 18.5 | 3.75 | 26.5 | 18.5 | 0 | 0.5 | 0 |
| | C4 | 25.5 | 26 | -0.25 | 25.25 | 25 | 0 | -0.25 | -1 | 0.25 |
| | C5 | 15.75 | 26 | -2.75 | 15.5 | 25 | -2.5 | -0.25 | -1 | 0.25 |
| | C6 | 0.75 | 26.5 | -1 | 0.5 | 25.5 | -1 | -0.25 | -1 | 0 |
| ROOF | D1 | | | | | | | 0 | 0 | 0 |
| | D2 | | | | | | | 0 | 0 | 0 |
| | D3 | | | | | | | 0 | 0 | 0 |
| | D4 | | | | | | | 0 | 0 | 0 |
| | D5 | | | | | | | 0 | 0 | 0 |
| | D6 | | | | | | | 0 | 0 | 0 |
| | D7 | | Roof crush omitted due to low probability of damage | | | | | 0 | 0 | 0 |
| | D8 | | | | | | | 0 | 0 | 0 |
| | D9 | | | | | | | 0 | 0 | 0 |
| | D10 | | | | | | | 0 | 0 | 0 |
| | D11 | | | | | | | 0 | 0 | 0 |
| | D12 | | | | | | | 0 | 0 | 0 |
| | D13 | | | | | | | 0 | 0 | 0 |
| | D14 | | | | | | | 0 | 0 | 0 |
| | D15 | | | | | | | 0 | 0 | 0 |

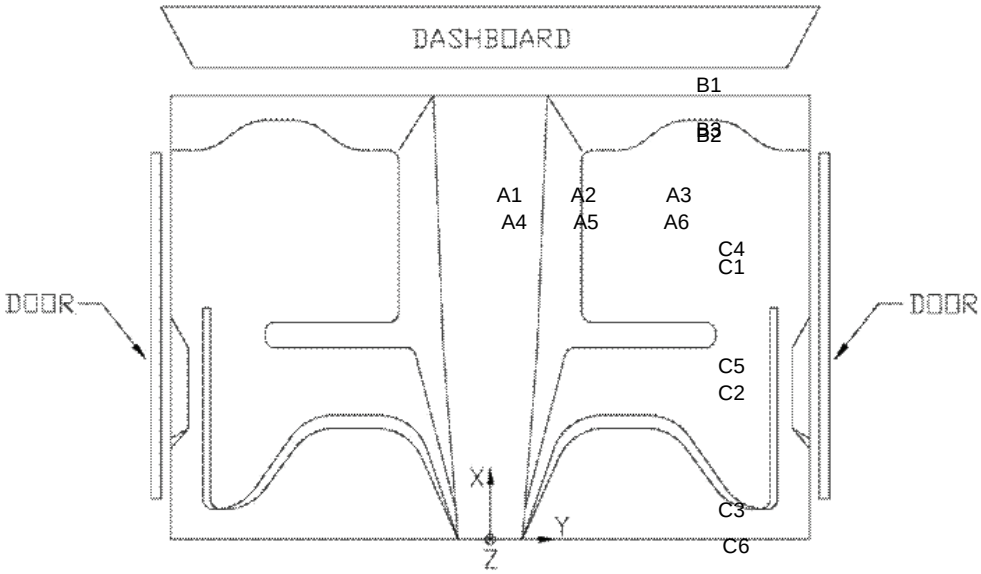


Figure D-3. Occupant Compartment Deformation Data – Set 1, Test No. MGSWP-1

VEHICLE PRE/POST CRUSH
INTERIOR CRUSH - SET 2

TEST: MGSWP-1
VEHICLE: 2270P Dodge Ram

Note: If impact is on driver side need to enter negative number for Y

| | POINT | X (in.) | Y (in.) | Z (in.) | X' (in.) | Y' (in.) | Z' (in.) | ΔX (in.) | ΔY (in.) | ΔZ (in.) |
|---|---|---|---|---|---|---|---|---|---|---|
| DASH | A1 | 43 | 18.5 | 22.25 | 43 | 18.75 | 22.25 | 0 | 0.25 | 0 |
| | A2 | 43 | 26.25 | 22.25 | 43 | 26.5 | 22 | 0 | 0.25 | -0.25 |
| | A3 | 43 | 36.5 | 21.75 | 43 | 36.5 | 21.5 | 0 | 0 | -0.25 |
| | A4 | 40.75 | 19.25 | 15.5 | 40.75 | 19 | 15.75 | 0 | -0.25 | 0.25 |
| | A5 | 40.75 | 27 | 16 | 40.75 | 27 | 16.25 | 0 | 0 | 0.25 |
| | A6 | 40.75 | 37 | 15.75 | 40.75 | 37.25 | 15.75 | 0 | 0.25 | 0 |
| SIDE PANEL | B1 | 52.25 | 40.5 | -1 | 52.5 | 40.25 | -1 | 0.25 | -0.25 | 0 |
| | B2 | 48.25 | 40.5 | -1.5 | 48.5 | 40.25 | -1.5 | 0.25 | -0.25 | 0 |
| | B3 | 49 | 40.5 | -6.25 | 49.25 | 40.25 | -6.25 | 0.25 | -0.25 | 0 |
| IMPACT SIDE DOOR | C1 | 37.25 | 42.75 | 17.25 | 37 | 43 | 17.5 | -0.25 | 0.25 | 0.25 |
| | C2 | 26.75 | 42.75 | 18 | 26.5 | 43 | 18.25 | -0.25 | 0.25 | 0.25 |
| | C3 | 17 | 42.75 | 18.5 | 16.75 | 43 | 18.5 | -0.25 | 0.25 | 0 |
| | C4 | 39.25 | 42.75 | 0 | 39 | 42 | 0 | -0.25 | -0.75 | 0 |
| | C5 | 29.5 | 42.25 | -2.5 | 29 | 42 | -2.25 | -0.5 | -0.25 | 0.25 |
| | C6 | 14 | 42.75 | -1 | 13.5 | 42.5 | -1 | -0.5 | -0.25 | 0 |
| ROOF | D1 | | | | | | | 0 | 0 | 0 |
| | D2 | | | | | | | 0 | 0 | 0 |
| | D3 | | | | | | | 0 | 0 | 0 |
| | D4 | | | | | | | 0 | 0 | 0 |
| | D5 | | | | | | | 0 | 0 | 0 |
| | D6 | | | | | | | 0 | 0 | 0 |
| | D7 | | Roof crush omitted due to low probability of damage | | | | | 0 | 0 | 0 |
| | D8 | | | | | | | 0 | 0 | 0 |
| | D9 | | | | | | | 0 | 0 | 0 |
| | D10 | | | | | | | 0 | 0 | 0 |
| | D11 | | | | | | | 0 | 0 | 0 |
| | D12 | | | | | | | 0 | 0 | 0 |
| | D13 | | | | | | | 0 | 0 | 0 |
| | D14 | | | | | | | 0 | 0 | 0 |
| | D15 | | | | | | | 0 | 0 | 0 |

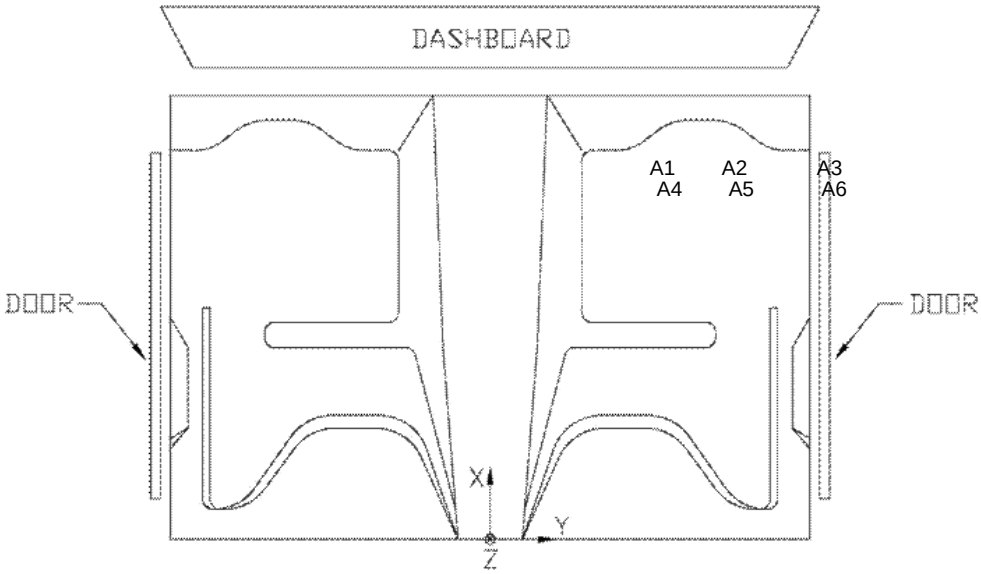


Figure D-4. Occupant Compartment Deformation Data – Set 2, Test No. MGSWP-1

**Date:** 4/2/2010 **Test Number:** MGSWP-1

**Make:** Dodge **Model:** 2270P Dodge Ram **Year:** 2003

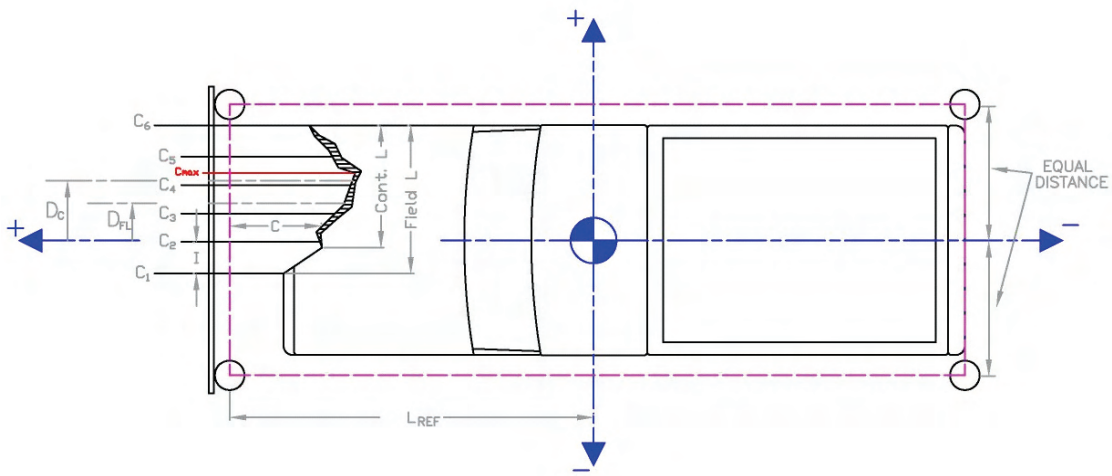


| | in. | (mm) |
|---|---|---|
| Distance from C.G. to reference line - $L_{REF}$: | 118.125 | (3000) |
| Width of contact and induced crush - Field L: | 39 | (991) |
| Crush measurement spacing interval (L/5) - I: | 7.8 | (198) |
| Distance from center of vehicle to center of Field L - $D_{FL}$: | 19.5 | (495) |
| Width of Contact Damage: | 27 | (686) |
| Distance from center of vehicle to center of contect damage - $D_C$: | 25.5 | (648) |

NOTE: Enter "NA" for crush measurement if distance can not be measured (i e , side of vehicle has been pushed inward)

| | Crush Measurement | | Lateral Location | | Original Profile Measurement | | Dist. Between Ref. Lines | | Actual Crush | |
|---|---|---|---|---|---|---|---|---|---|---|
| | in. | (mm) | in. | (mm) | in. | (mm) | in. | (mm) | in. | (mm) |
| $C_1$ | 15.25 | (387) | 0 | () | 10.25 | (260) | 5.51556 | (140) | -0.51556 | -(13) |
| $C_2$ | 15.875 | (403) | 7.8 | (198) | 10.484 | (266) | | | -0.12494 | -(3) |
| $C_3$ | 17.75 | (451) | 15.6 | (396) | 11.656 | (296) | | | 0.57819 | (15) |
| $C_4$ | 22.75 | (578) | 23.4 | (594) | 13.391 | (340) | | | 3.84381 | (98) |
| $C_5$ | NA | NA | 31.2 | (792) | 16.813 | (427) | | | NA | NA |
| $C_6$ | NA | NA | 39 | (991) | 29 | (737) | | | NA | NA |
| $C_{MAX}$ | 22.75 | (578) | 23.4 | (594) | 13.391 | (340) | | | 3.84381 | (98) |

Figure D-5. Exterior Vehicle Crush (NASS) - Front, Test No. MGSWP-1

**Date:** 4/2/2010 **Test Number:** MGSWP-1

**Make:** Dodge **Model:** 2270P Dodge Ram **Year:** 2003

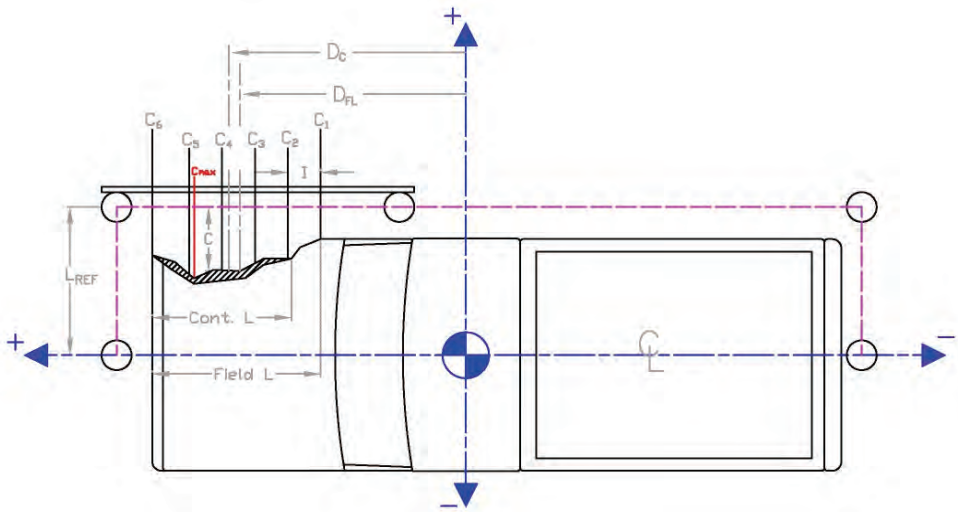


| | in. | (mm) |
|---|---|---|
| Distance from centerline to reference line - $L_{REF}$: | 47.125 | (1197) |
| Width of contact and induced crush - Field L: | 227.5 | (5779) |
| Crush measurement spacing interval (L/5) - I: | 45.5 | (1156) |
| Distance from vehicle c.g. to center of Field L - $D_{FL}$: | -10.38 | -(264) |
| Width of Contact Damage: | 227.5 | (5779) |
| Distance from vehicle c.g. to center of contect damage - $D_C$: | 10.375 | (264) |

NOTE: Enter "NA" for crush measurement if distance can not be measured (i e , front of vehicle has been pushed inward or tire has been remeoved)

| | Crush Measurement | | Longitudinal Location | | Original Profile Measurement | | Dist. Between Ref. Lines | | Actual Crush | |
|---|---|---|---|---|---|---|---|---|---|---|
| | in. | (mm) | in. | (mm) | in. | (mm) | in. | (mm) | in. | (mm) |
| $C_1$ | 14 | (356) | -124.1 | -(3153) | 15.375 | (391) | -2.875 | -(73) | 1.5 | (38) |
| $C_2$ | 10.5 | (267) | -78.63 | -(1997) | 10.5 | (267) | | | 2.875 | (73) |
| $C_3$ | 9.5 | (241) | -33.13 | -(841) | 11.6042 | (295) | | | 0.77083 | (20) |
| $C_4$ | 10.5 | (267) | 12.375 | (314) | 11.25 | (286) | | | 2.125 | (54) |
| $C_5$ | NA | NA | 57.875 | (1470) | 10.5 | (267) | | | NA | NA |
| $C_6$ | NA | NA | 103.38 | (2626) | 37 | (940) | | | NA | NA |
| $C_{MAX}$ | 21 | (533) | 84 | (2134) | 11.5 | (292) | | | 12.375 | (314) |

Figure D-6. Exterior Vehicle Crush (NASS) - Side, Test No. MGSWP-1

# Appendix E. Accelerometer and Rate Transducer Data Plots, Test No. MGSWP-1

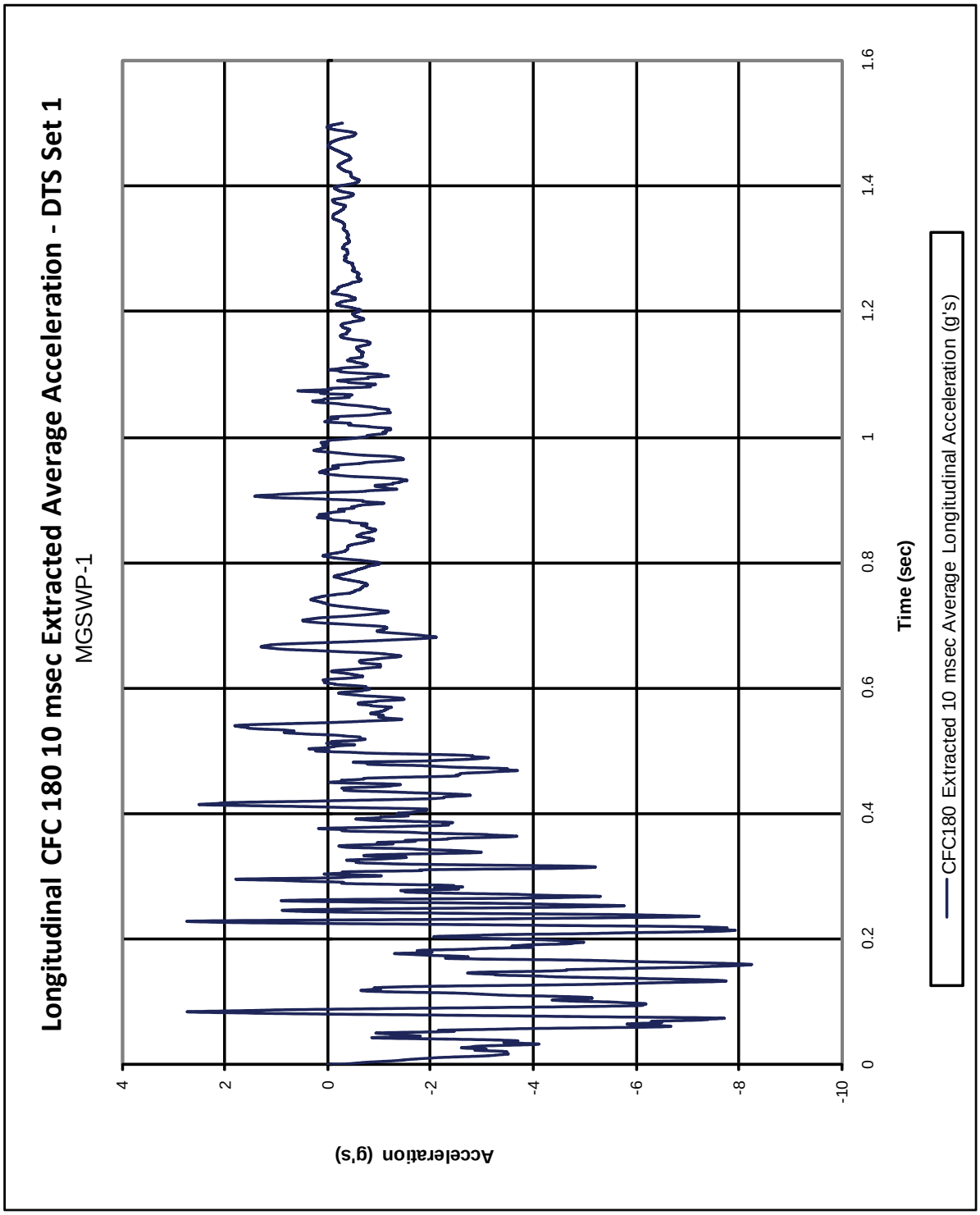


Figure E-1. 10-ms Average Longitudinal Deceleration (DTS Set 1), Test No. MGSWP-1

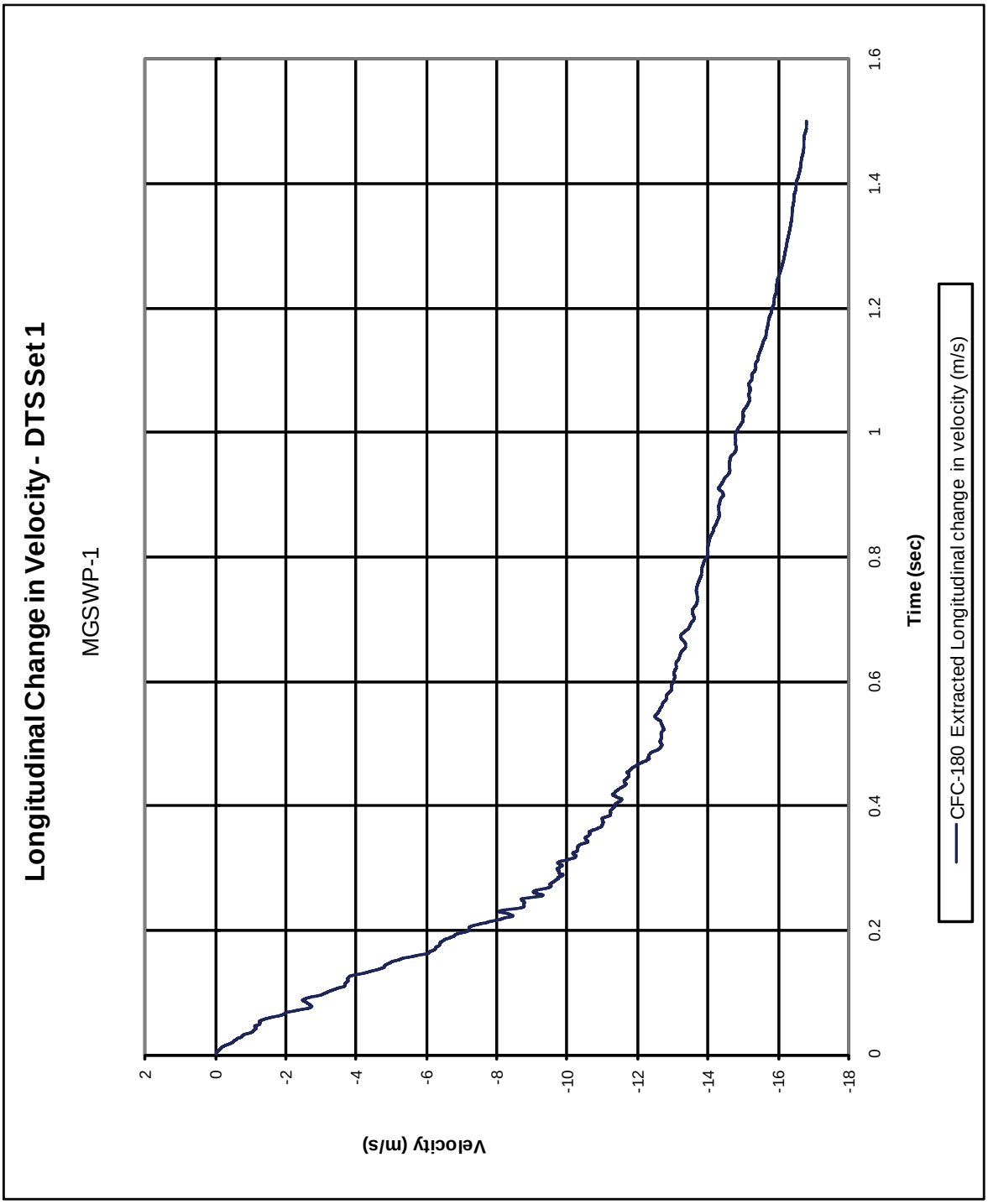


Figure E-2. Longitudinal Occupant Impact Velocity (DTS Set 1), Test No. MGSWP-1

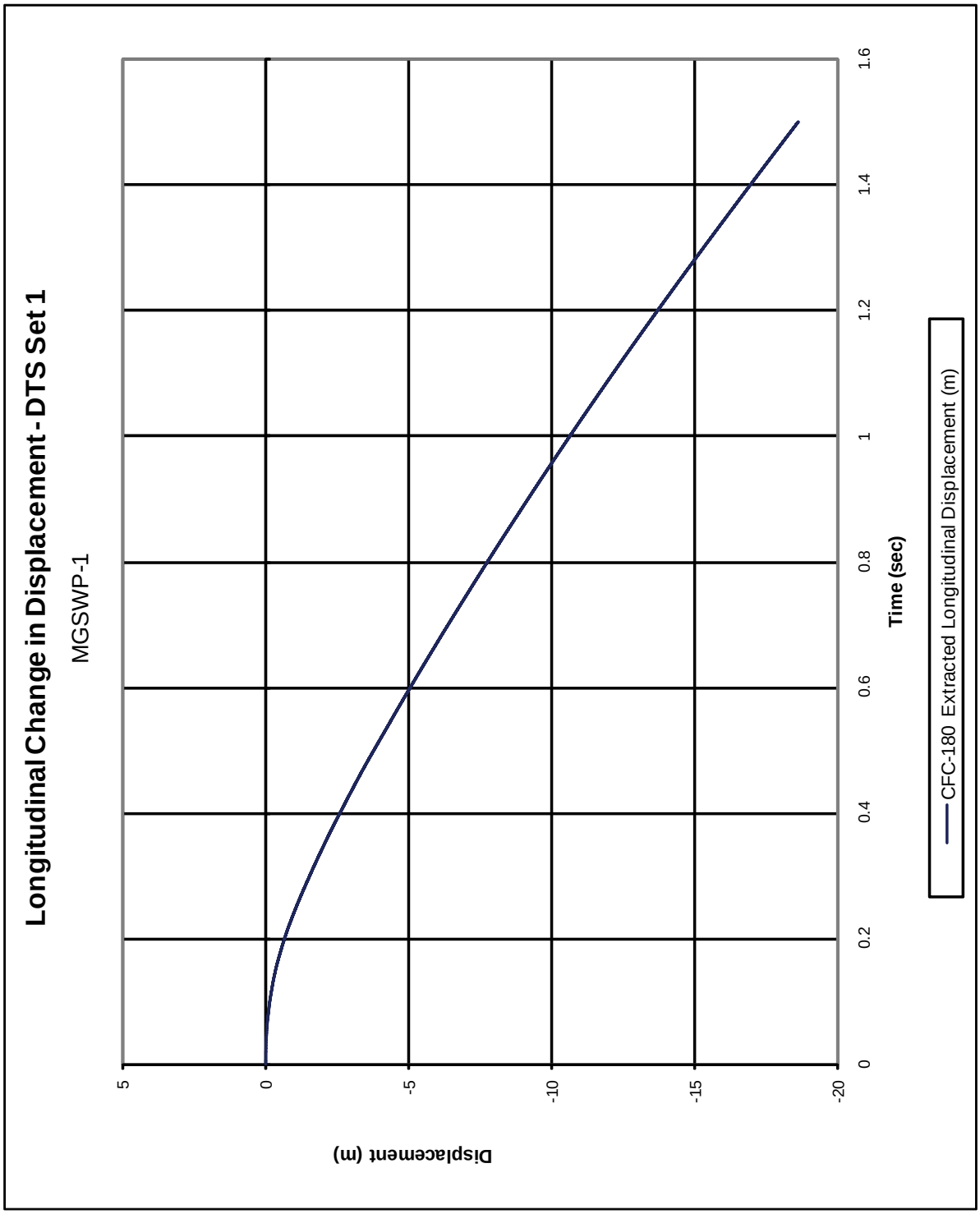


Figure E-3. Longitudinal Occupant Displacement (DTS Set 1), Test No. MGSWP-1

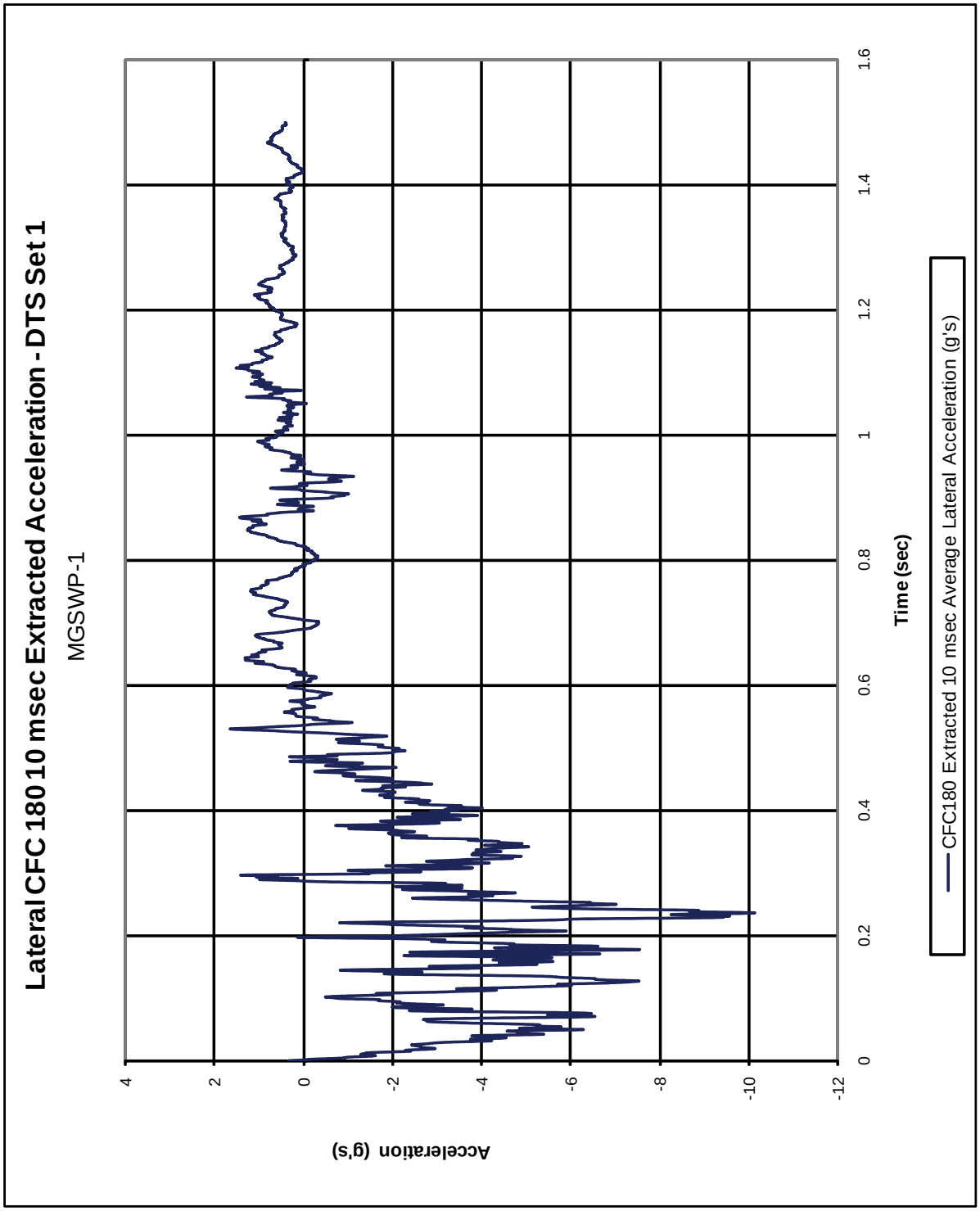


Figure E-4. 10-ms Average Lateral Deceleration (DTS Set 1), Test No. MGSWP-1

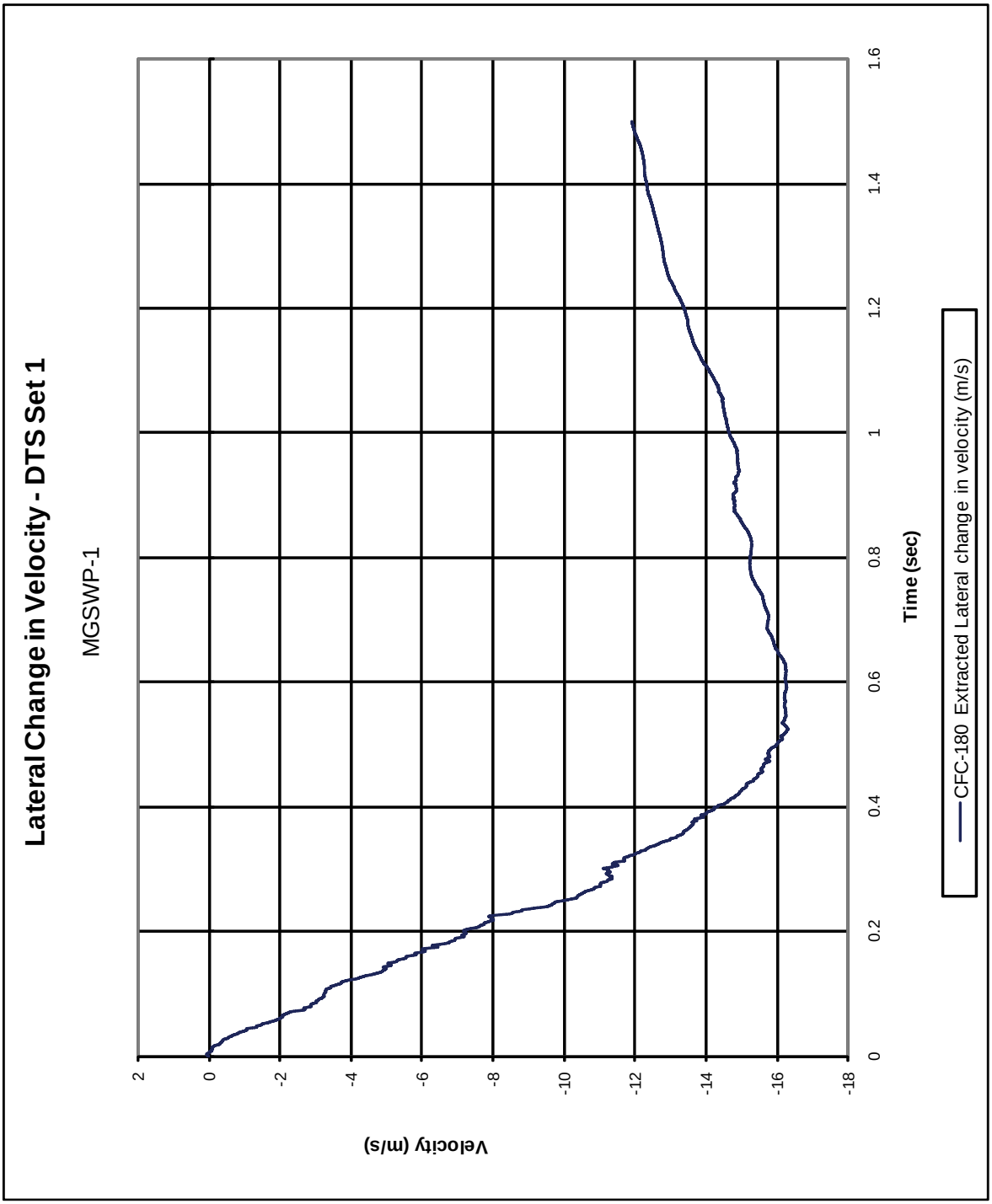


Figure E-5. Lateral Occupant Impact Velocity (DTS Set 1), Test No. MGSWP-1

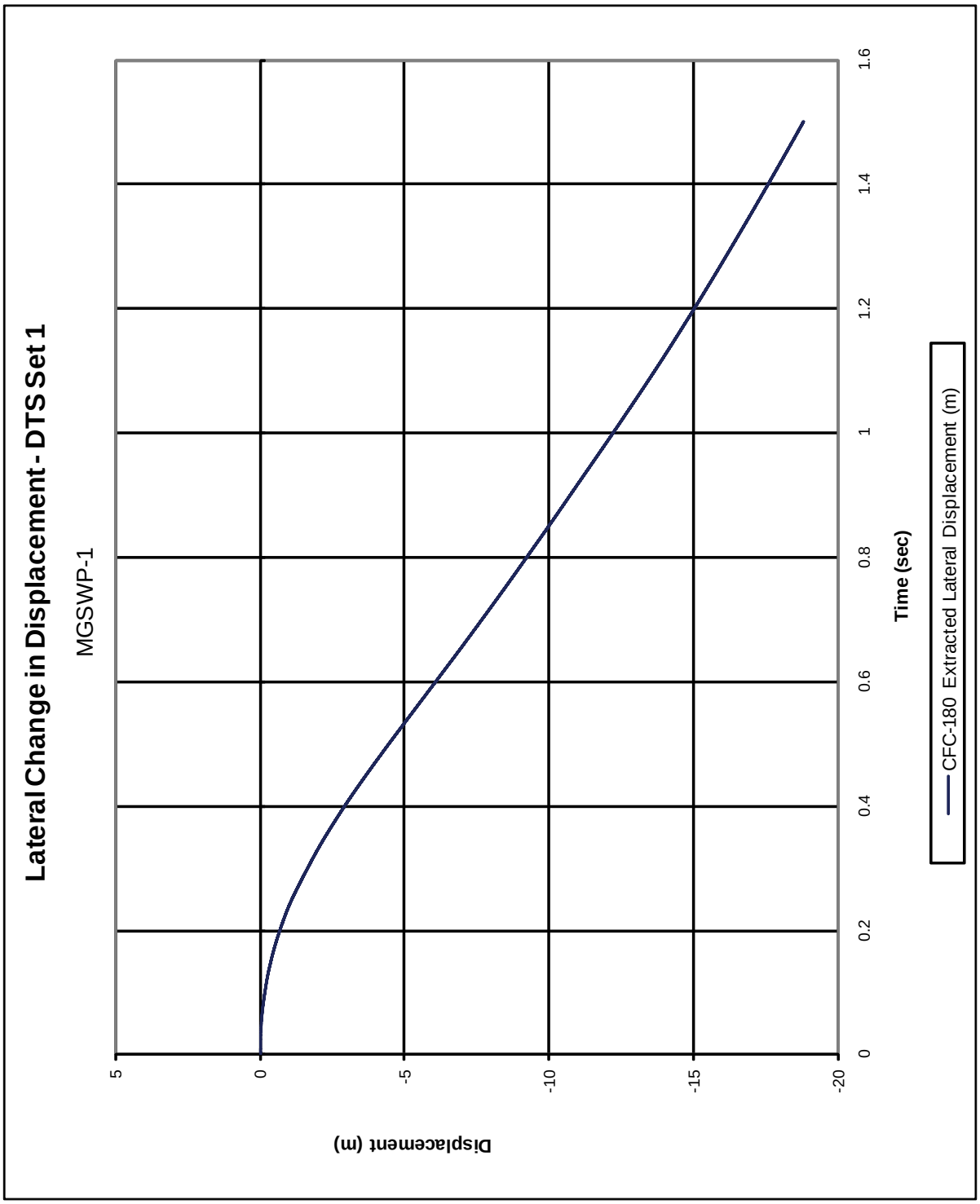


Figure E-6. Lateral Occupant Displacement (DTS Set 1), Test No. MGSWP-1

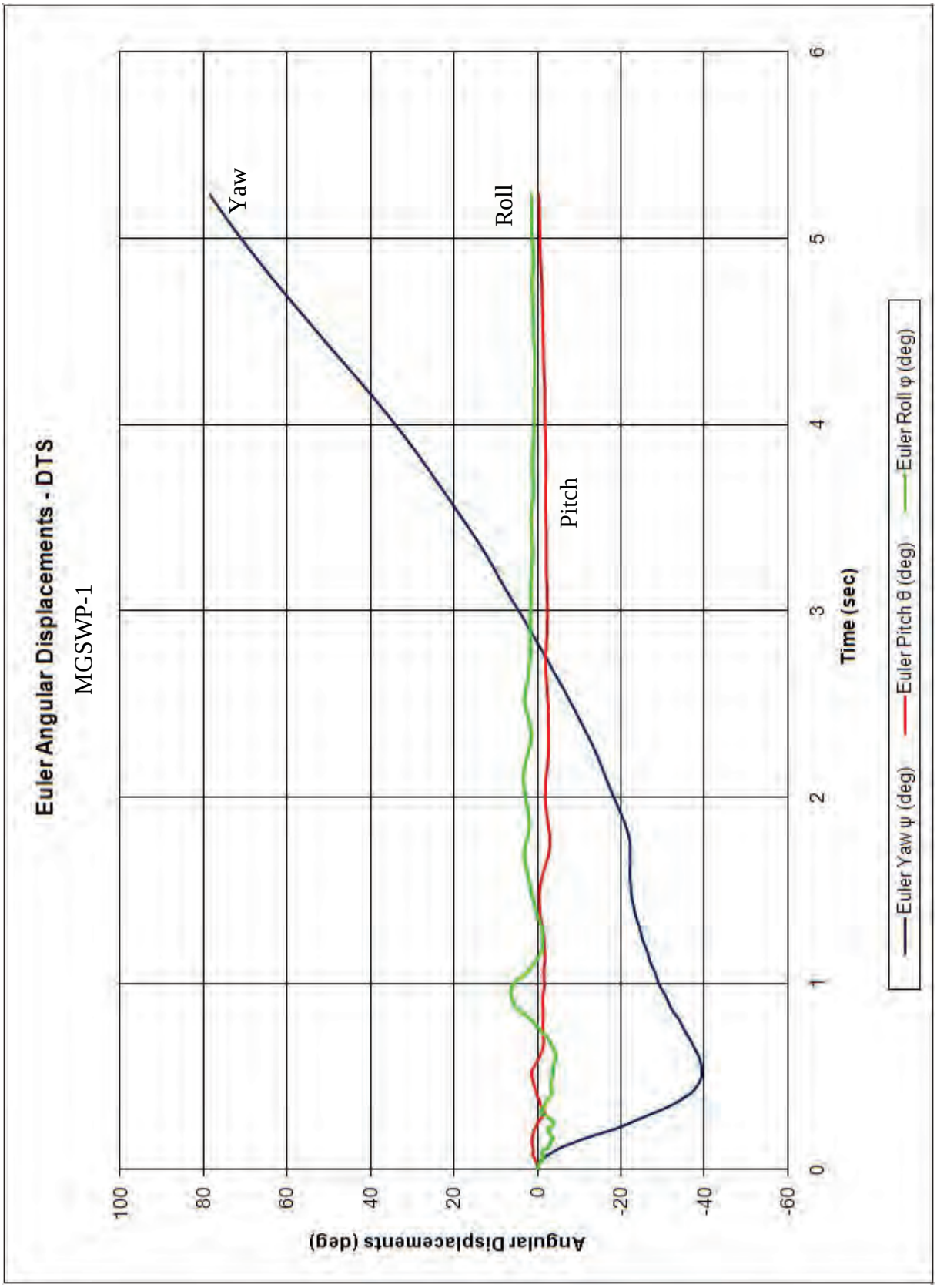


Figure E-7. Vehicle Angular Displacements (DTS), Test No. MGSWP-1

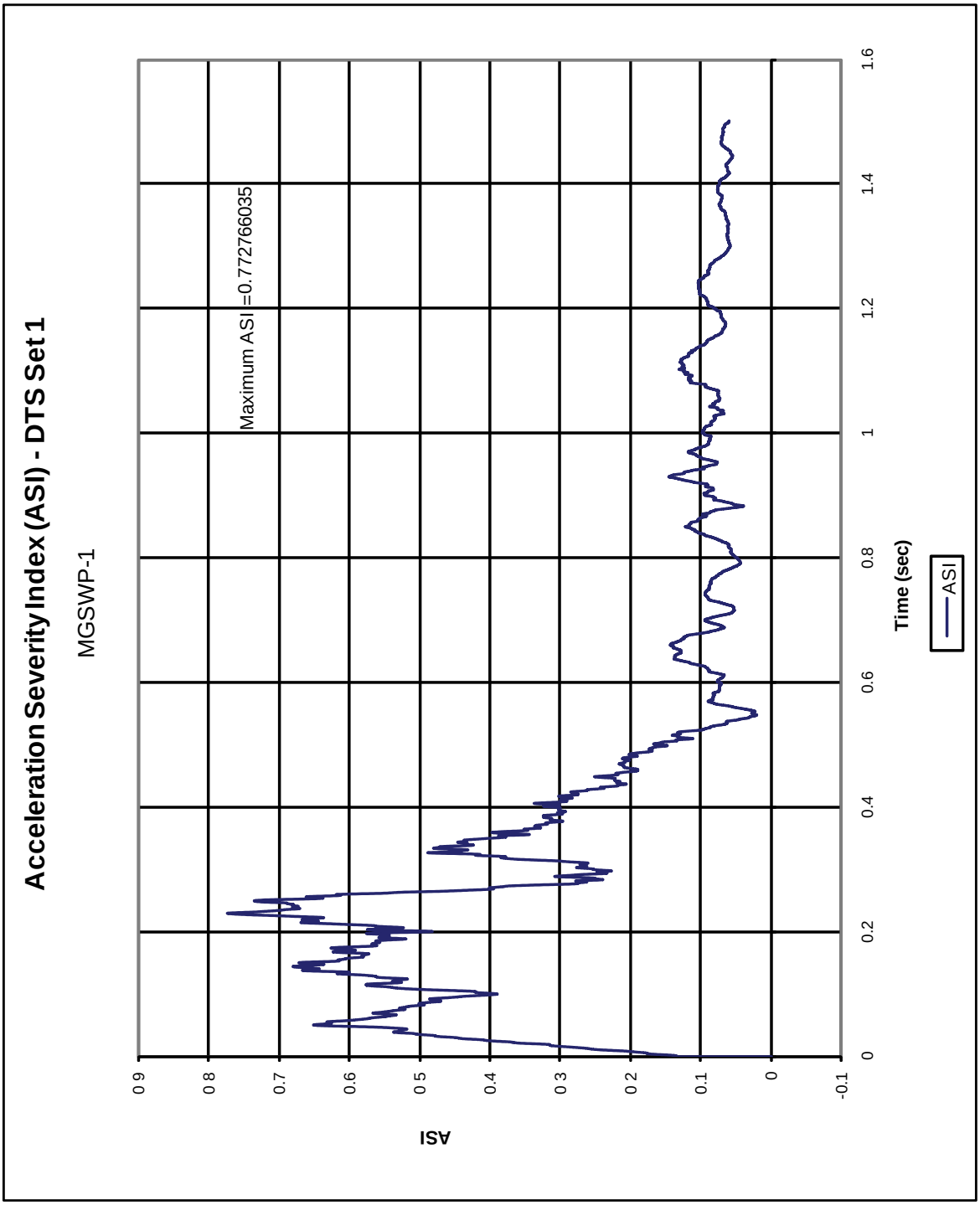


Figure E-8. Graph of Acceleration Severity Index (DTS Set 1), Test No. MGSWP-1

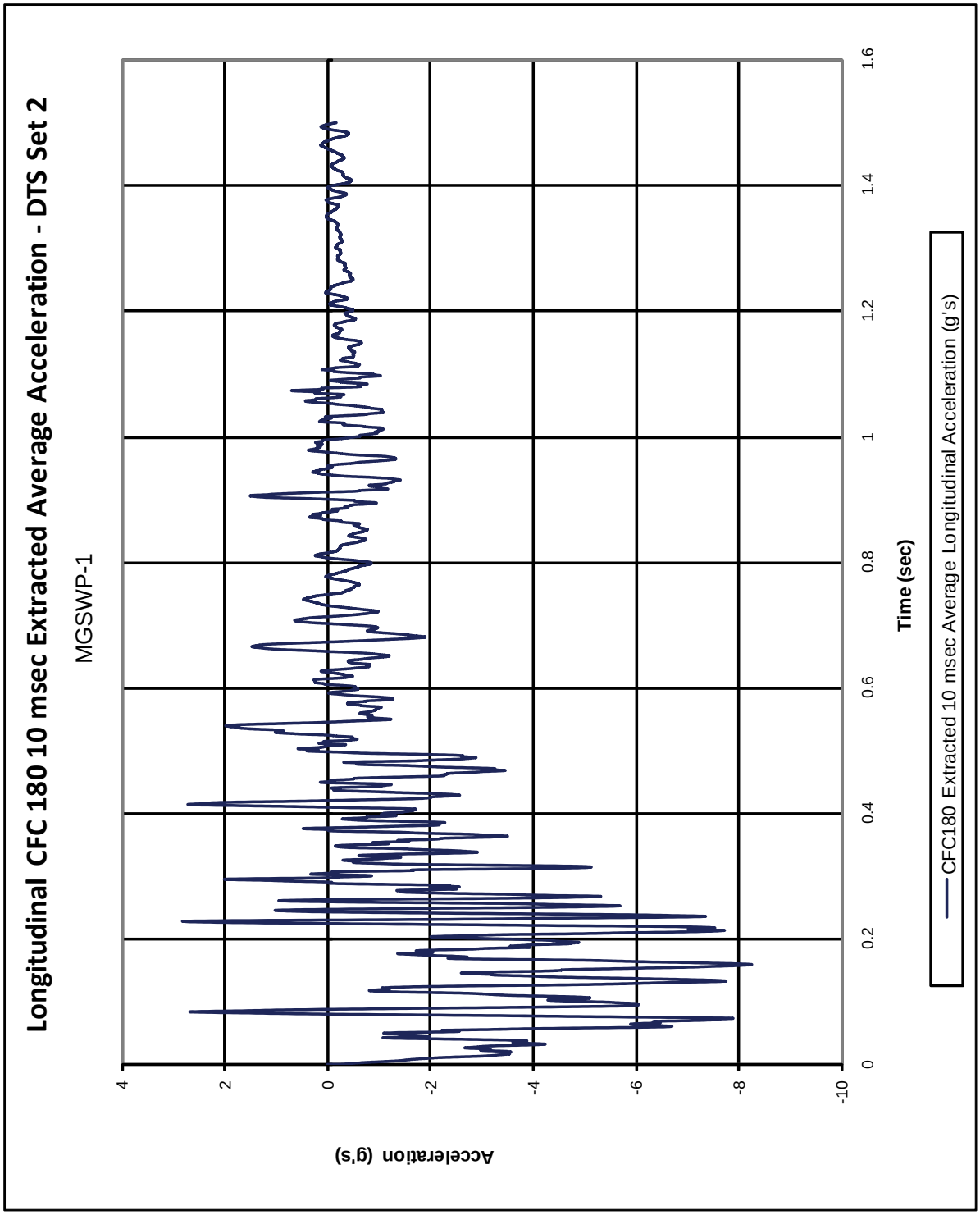


Figure E-9. 10-ms Average Longitudinal Deceleration (DTS Set 2), Test No. MGSWP-1

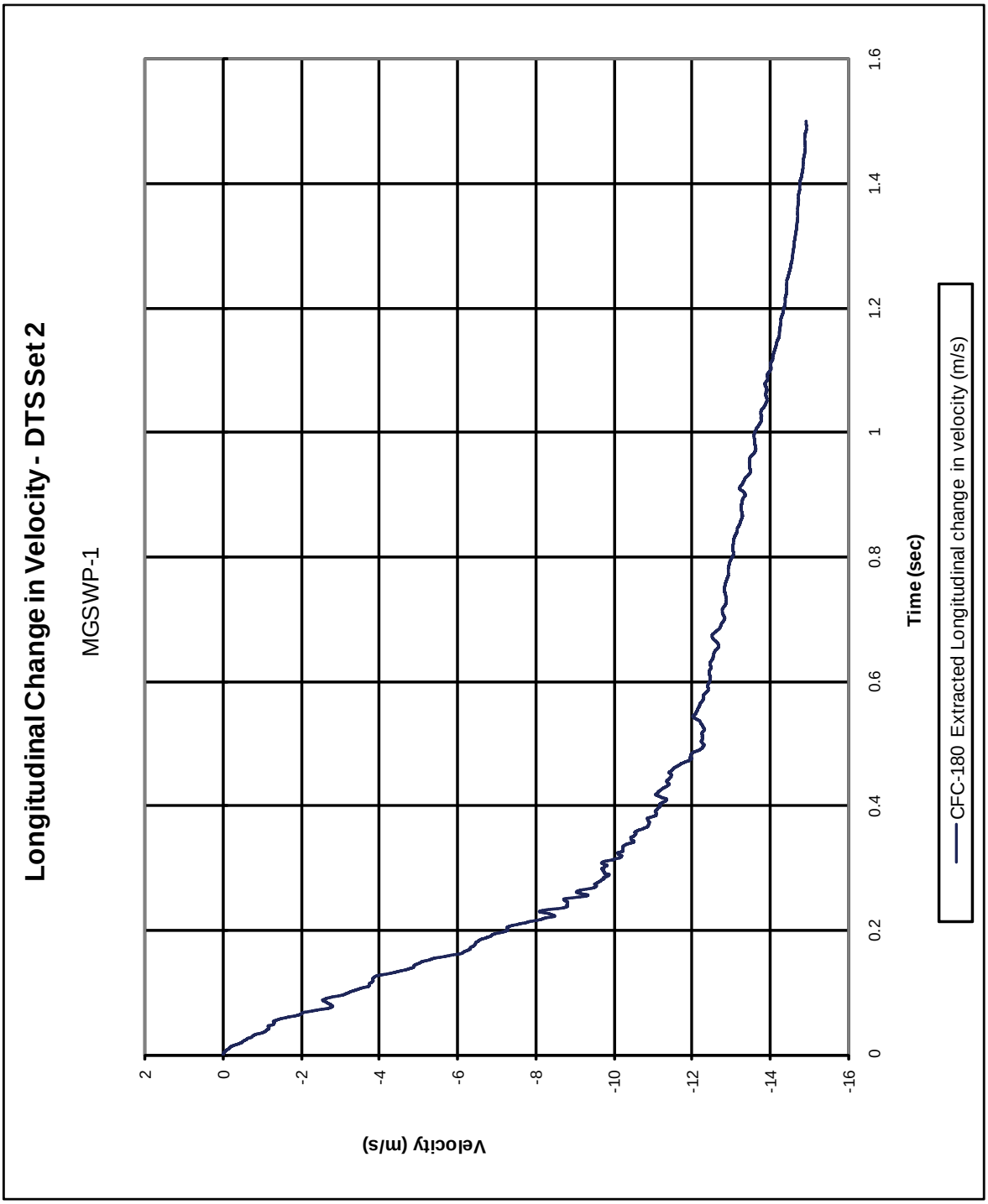


Figure E-10. Longitudinal Occupant Impact Velocity (DTS Set 2), Test No. MGSWP-1

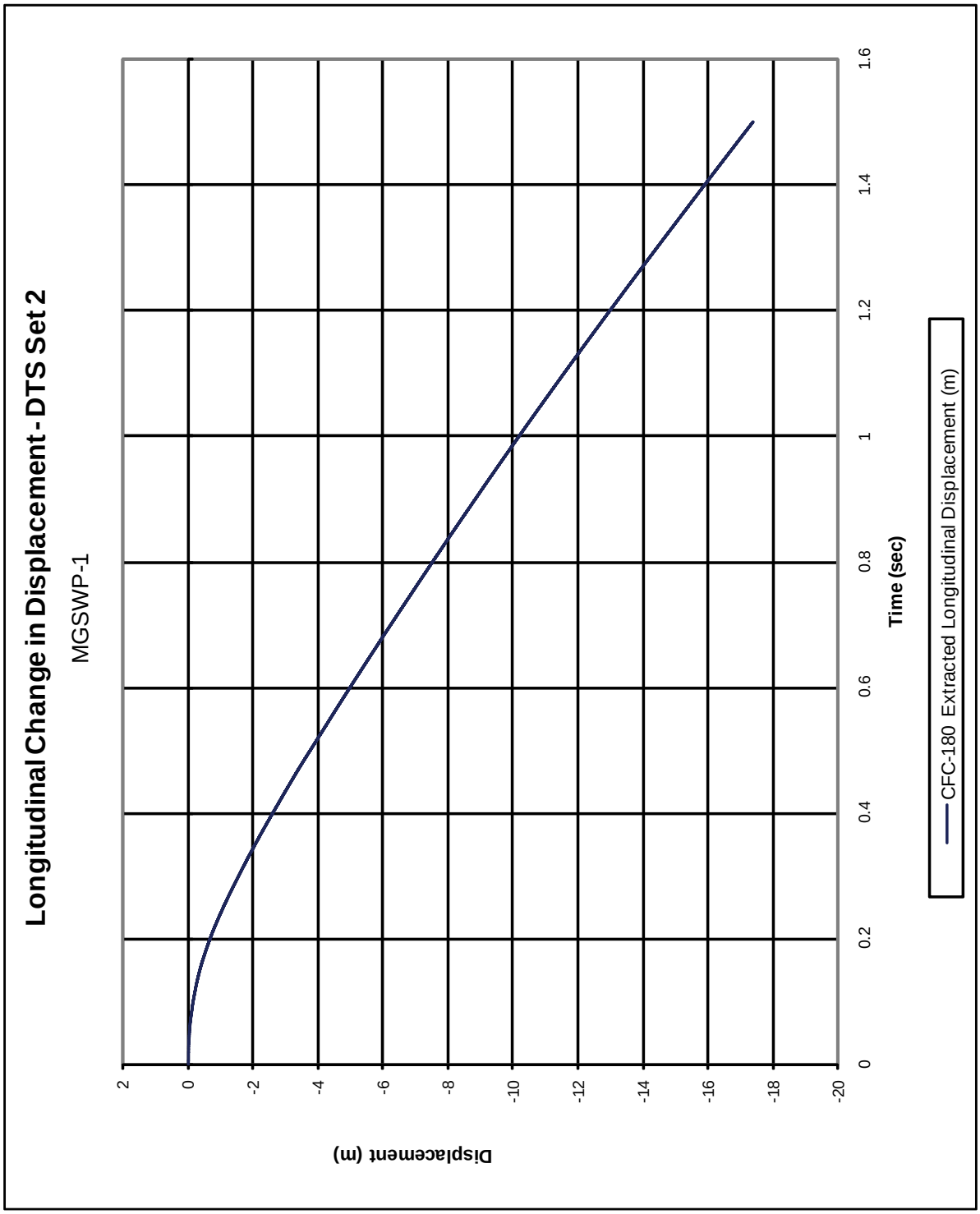


Figure E-11. Longitudinal Occupant Displacement (DTS Set 2), Test No. MGSWP-1

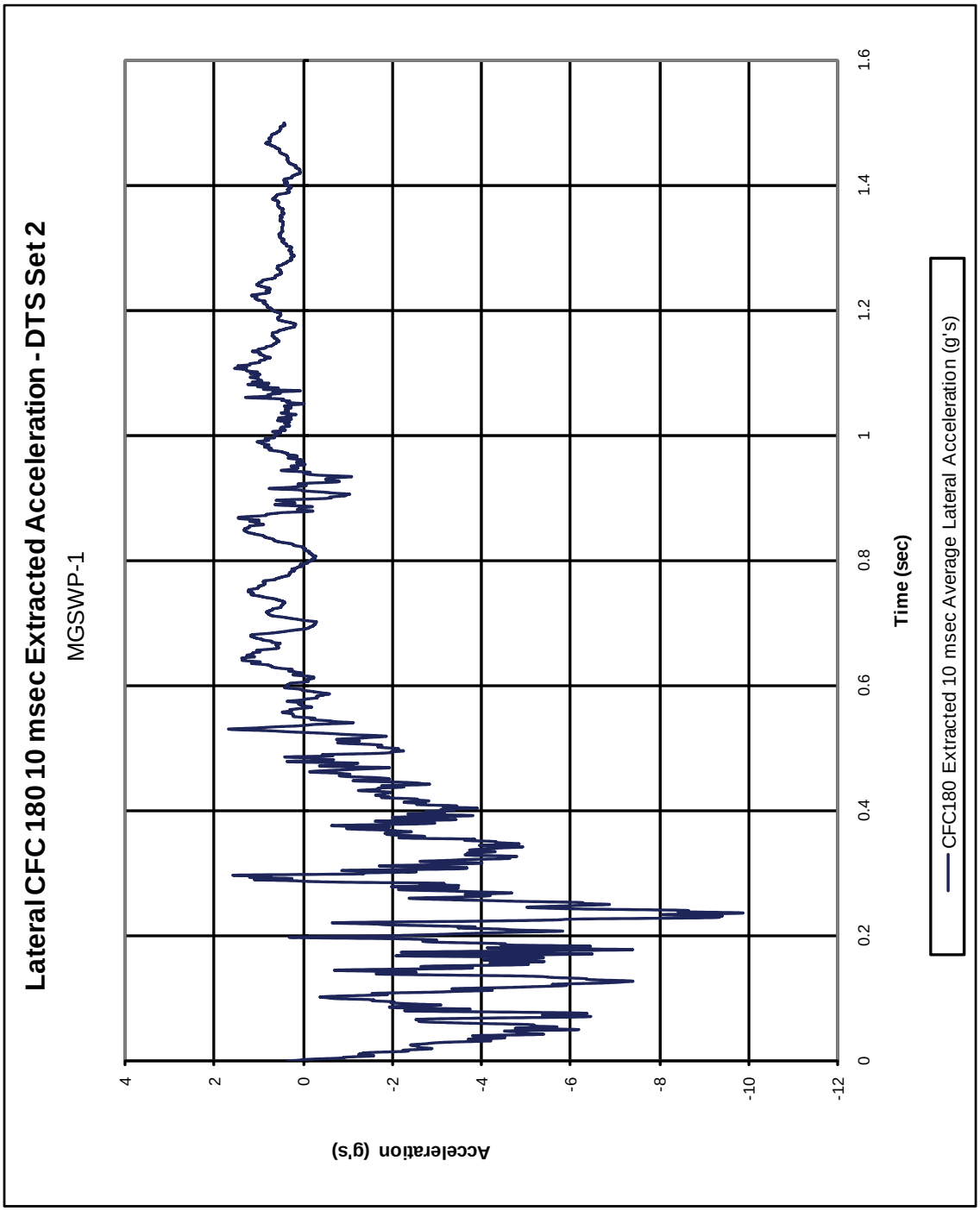


Figure E-12. 10-ms Average Lateral Deceleration (DTS Set 2), Test No. MGSWP-1

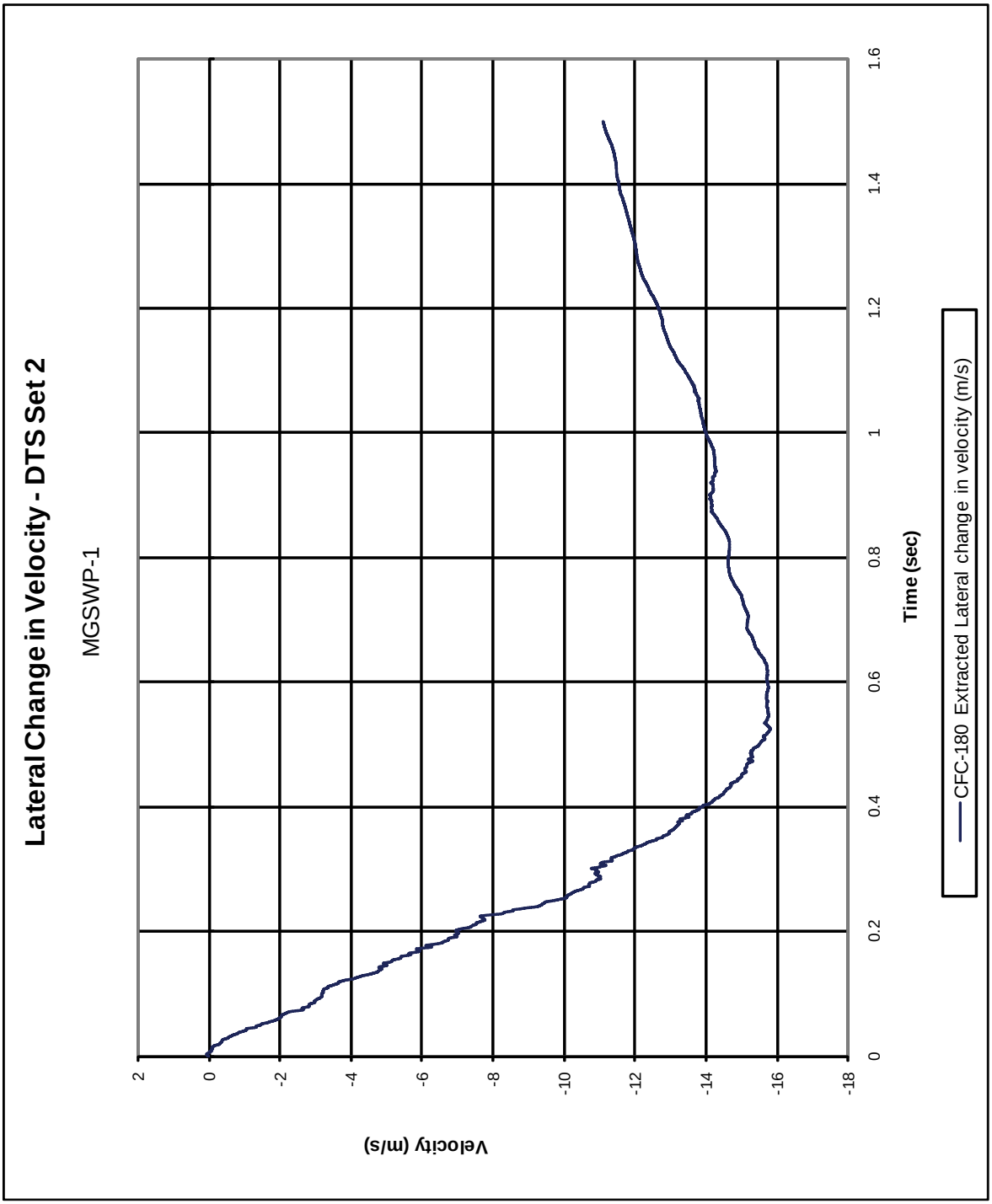


Figure E-13. Lateral Occupant Impact Velocity (DTS Set 2), Test No. MGSWP-1

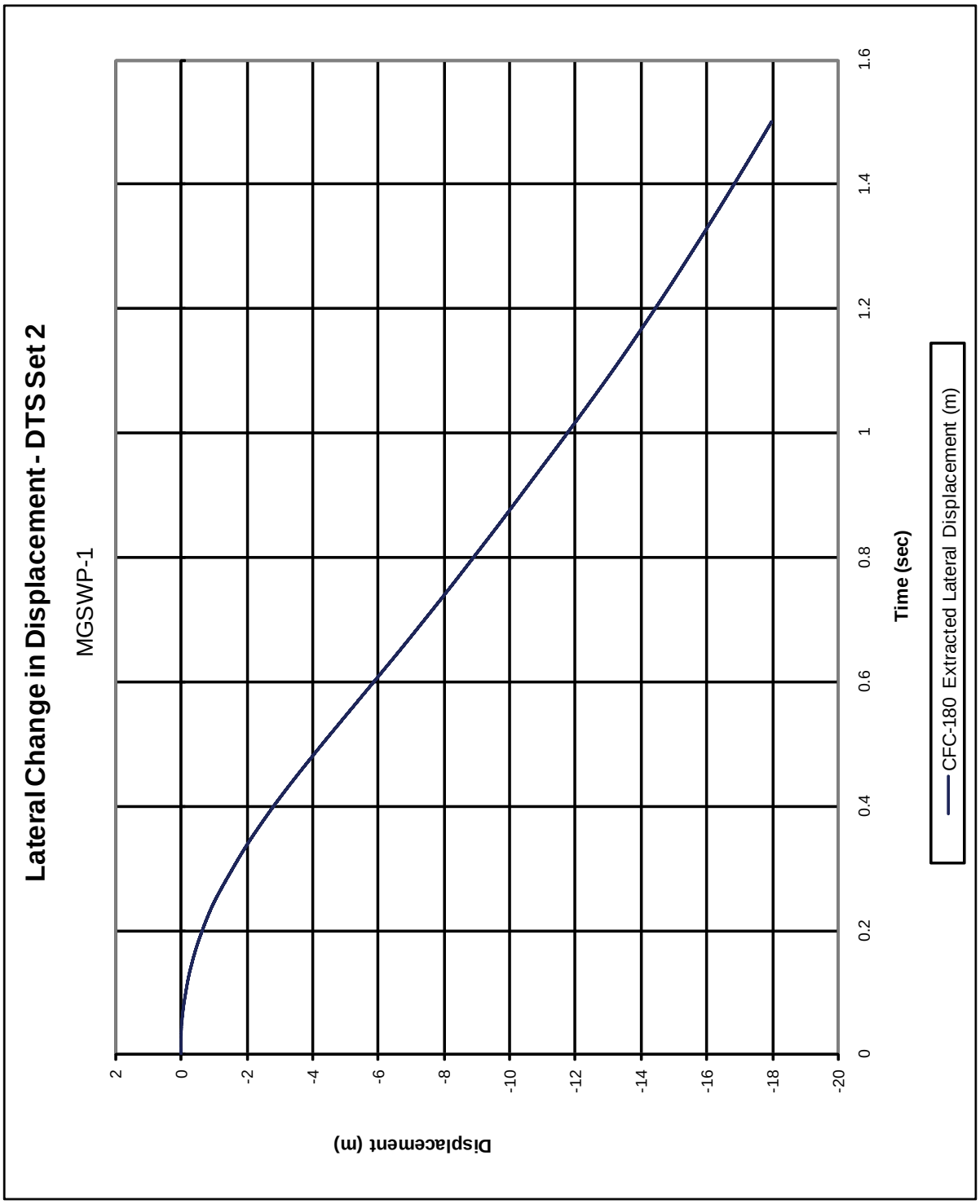


Figure E-14. Lateral Occupant Displacement (DTS Set 2), Test No. MGSWP-1

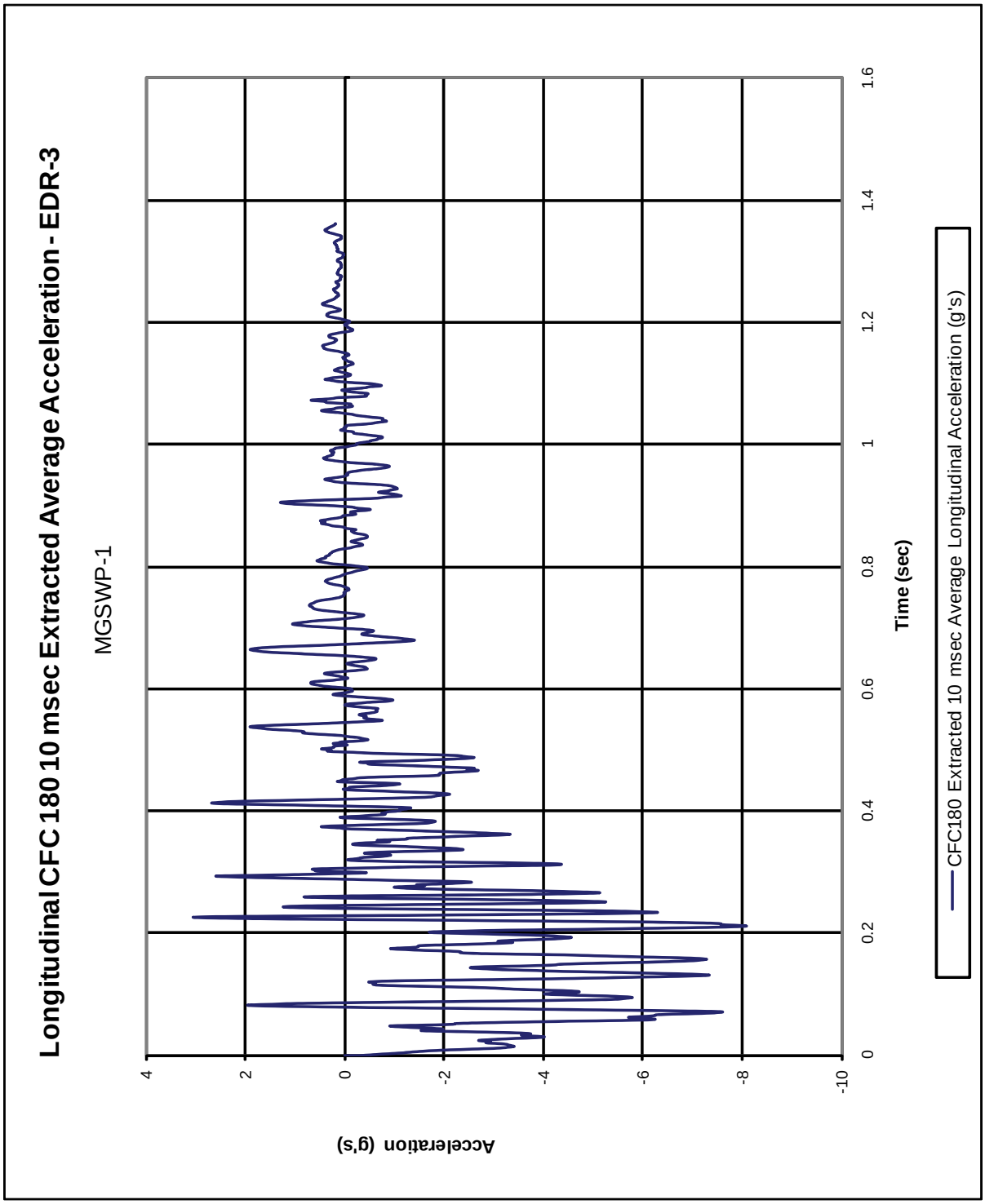


Figure E-15. 10-ms Average Longitudinal Deceleration (EDR-3), Test No. MGSWP-1

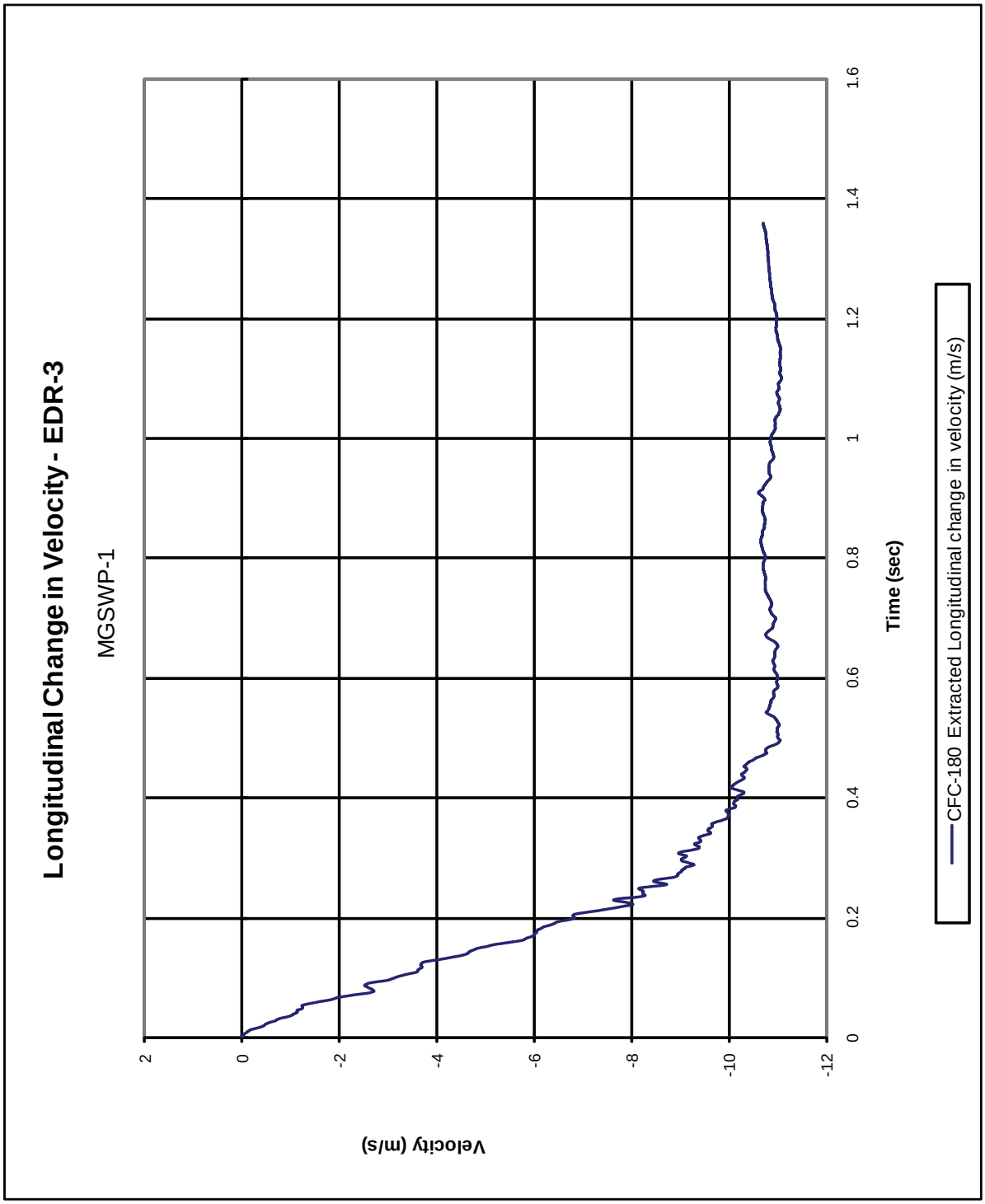


Figure E-16. Longitudinal Occupant Impact Velocity (EDR-3), Test No. MGSWP-1

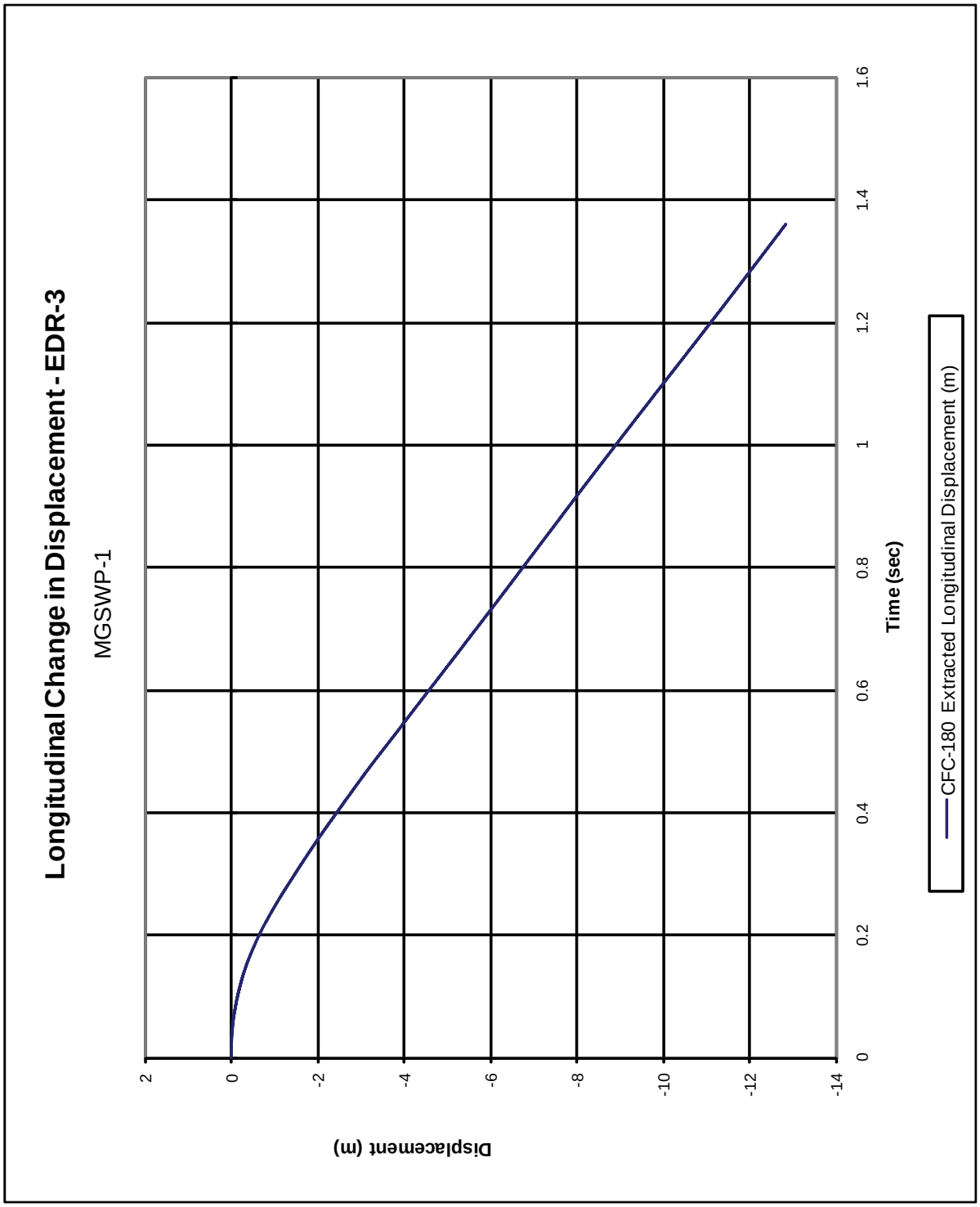


Figure E-17. Longitudinal Occupant Displacement (EDR-3), Test No. MGSWP-1

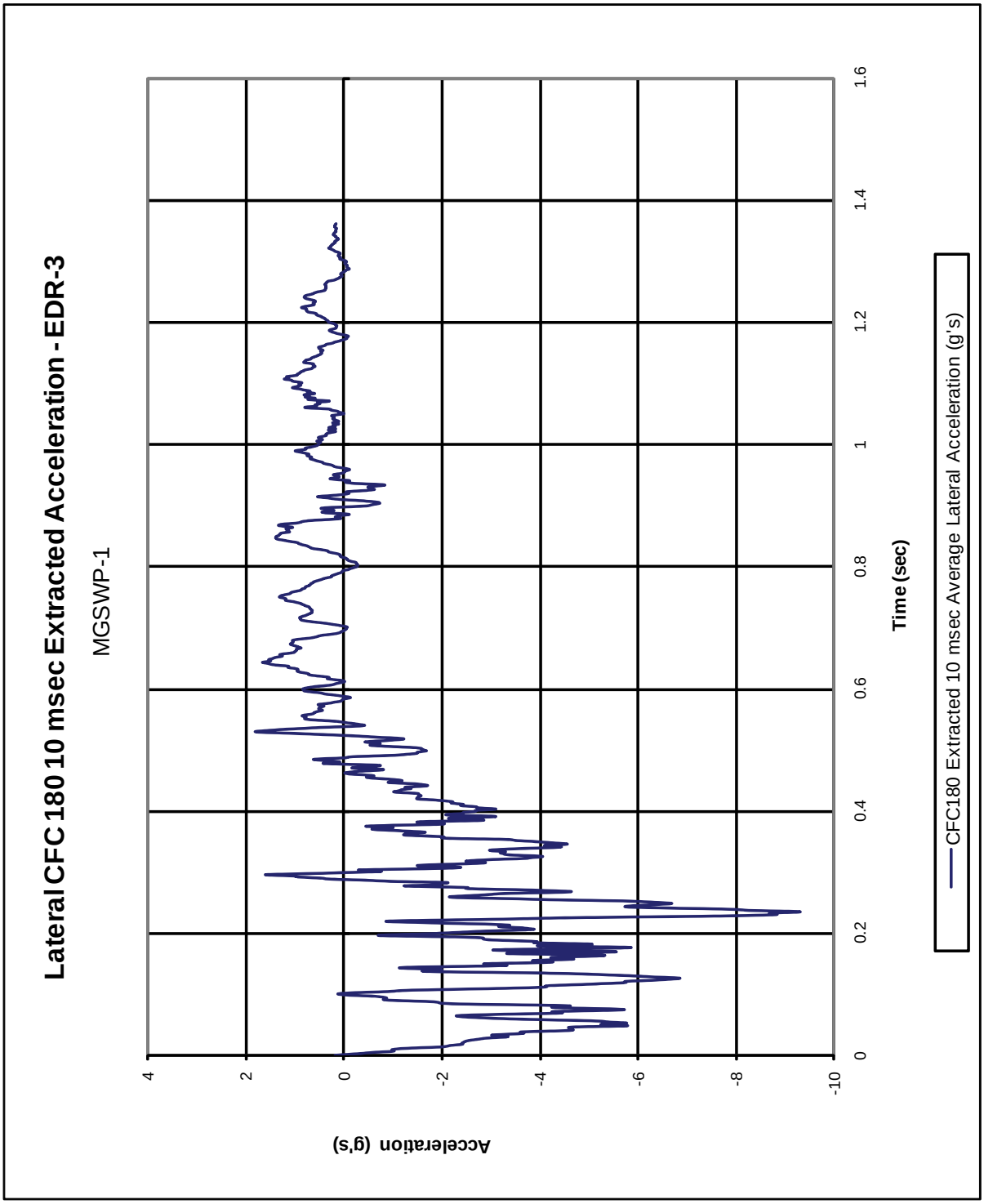


Figure E-18. 10-ms Average Lateral Deceleration (EDR-3), Test No. MGSWP-1

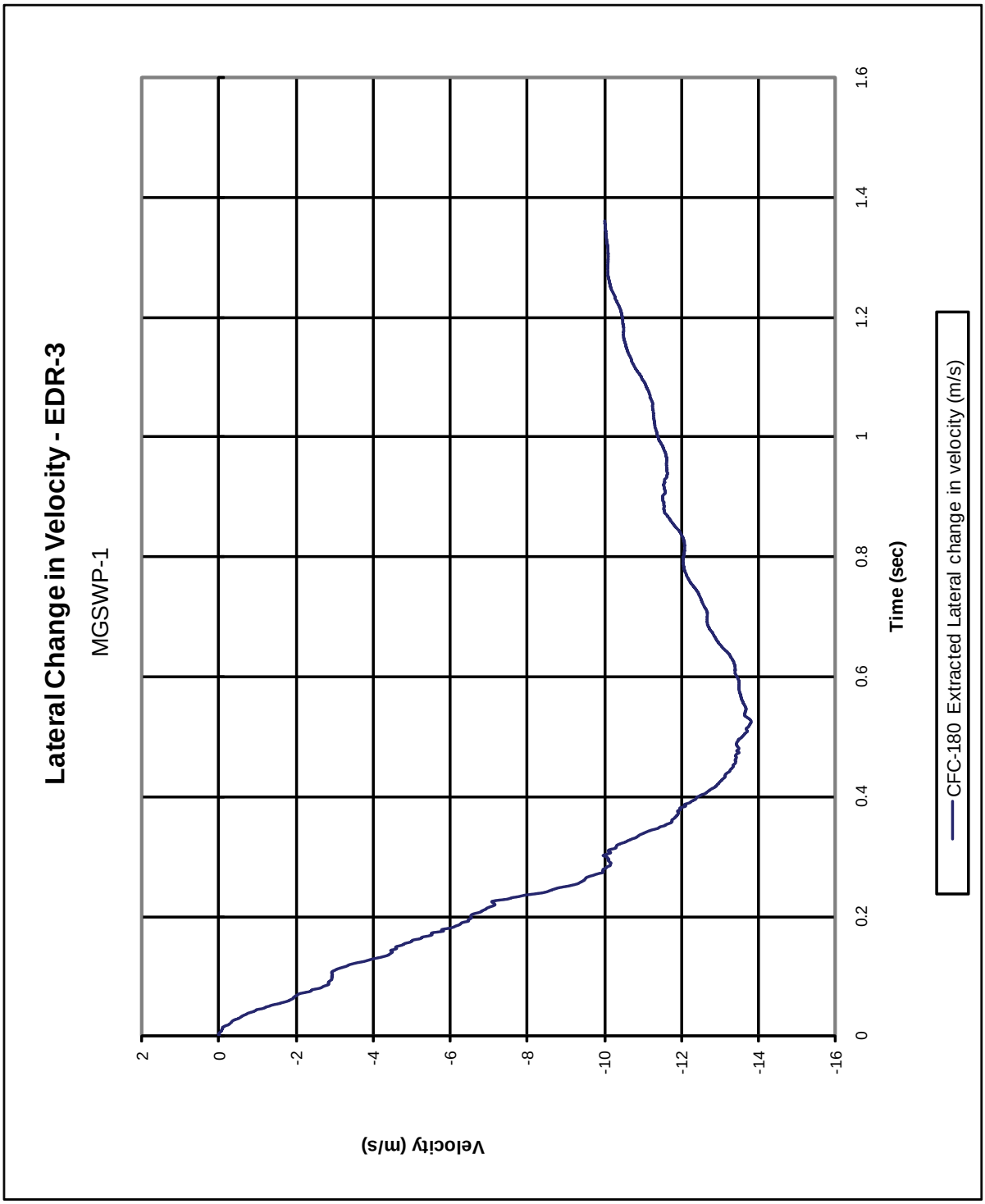


Figure E-19. Lateral Occupant Impact Velocity (EDR-3), Test No. MGSWP-1

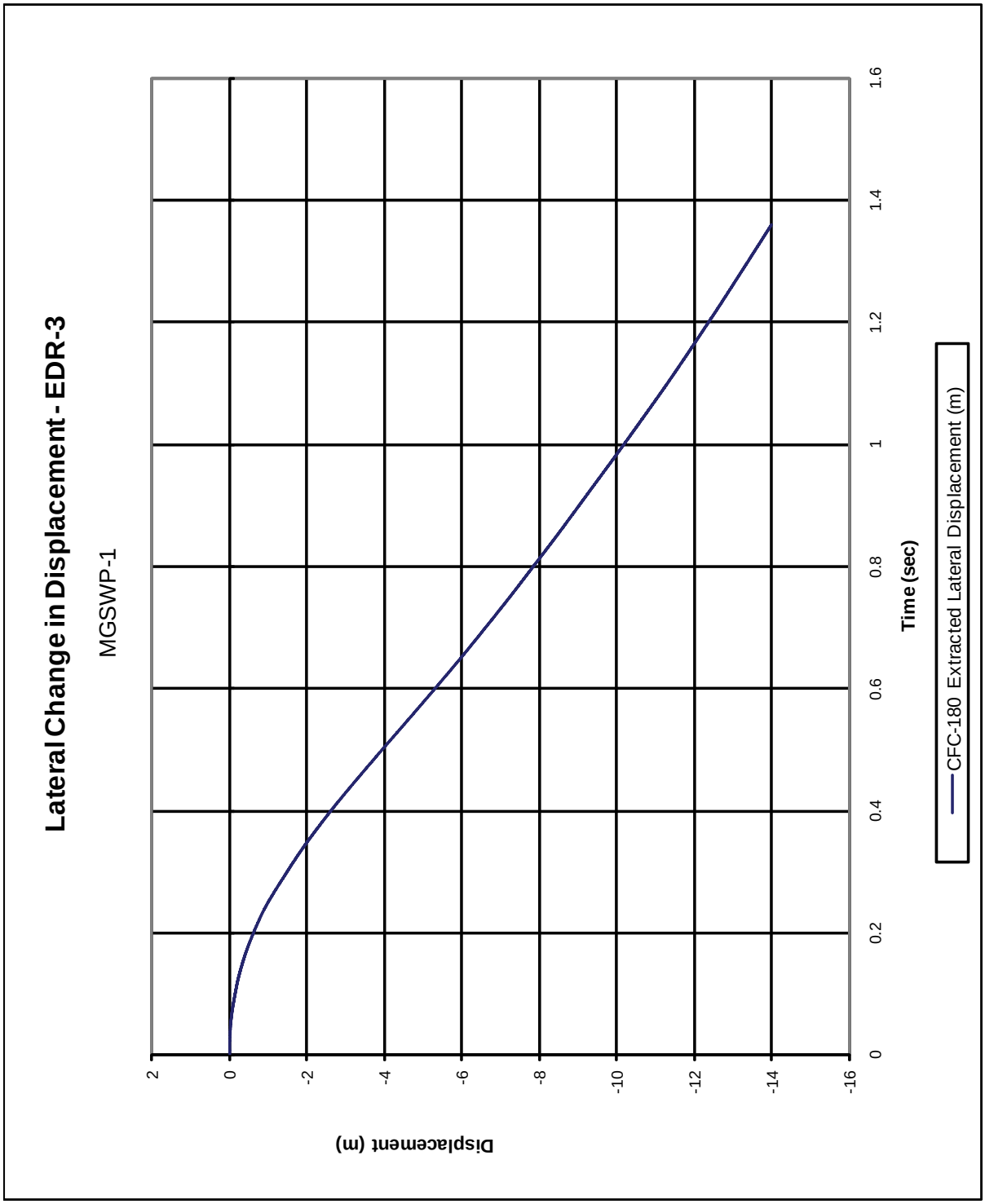


Figure E-20. Lateral Occupant Displacement (EDR-3), Test No. MGSWP-1

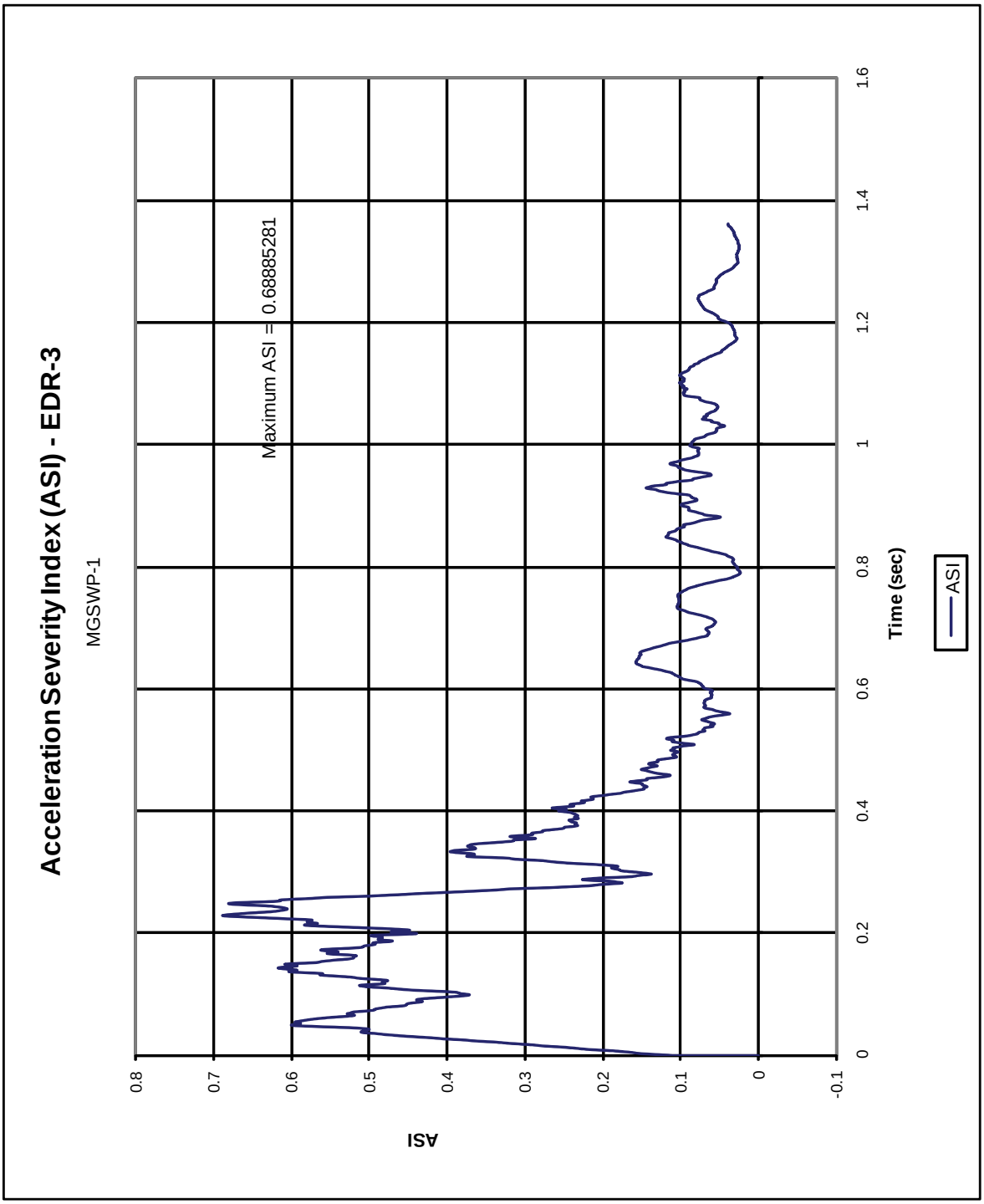


Figure E-21. Graph of Acceleration Severity Index (EDR-3), Test No. MGSWP-1

## Appendix F. White Pine Post MGS on 2:1 Slope

Current W-beam guardrail systems designed for use adjacent to 2:1 fill slopes utilized wood posts with increased lengths and embedment depths. White Pine posts with embedment depths of this extent would very likely fracture before rotating through the soil, thus resulting in reduced energy absorption, increased system deflections, and a greater propensity for vehicle instabilities. To mitigate concerns for post fracture, the length and embedment depth of a WP post must be adjusted to reduce its post-soil resistance.

Recent dynamic bogie testing of 6-in x 8-in. wood posts resulted in the recommendation that 7.5 ft long, SYP wood posts should be used for the MGS located adjacent to a 2:1 fill slope[A]. These posts were shown to provide an average resistive force over 15 in. of deflection equal to 10.5 kips. In a separate study, the modulus of rupture (MOR) for White Pine timber was calculated to be 2.73 ksi[B]. Utilizing this MOR value along with a 6-in. x 8-in. post cross section and a 24⅞ in. impact height, the estimated peak force value for a standard-sized, White Pine post was calculated to be 7 kips. Thus, the post length was reduced from 7.5 ft to 6.5 ft to prevent fracture. The post's cross section could also be increased to prevent fracture, but utilizing the standard post size was deemed the more desirable alternative.

Using the standard extrapolation equation for post-soil resistance at various embedment depths, the embedment depth likely to result in post fracture was calculated.

$$F'_s = F_s \left( \frac{EMB_{new}}{EMB_{existing}} \right)^2$$

$$7\ kips = 10.5\ kips \left( \frac{EMB_{new}}{58\ in.} \right)^2$$

$$EMB_x = 47.4\ in.$$

$F_s$ is the post-soil resistance for the known or existing embedment depth, while $F'_s$ is the post-soil resistance for a desired or new embedment depth.

Thus, an embedment depth equal to or less than 47.4 in. should reduce the propensity for White Pine post fracture. Using 0.5-ft intervals in post length, a 6.5-ft long WP post was selected, thus resulting in an embedment depth of 46 in.

A reduction in post embedment depth can result in decreased energy absorption during post rotation through soil. Consequently, increased system deflections and a greater propensity for vehicle instabilities may occur. As a result, MwRSF researchers recommend that the MGS installed adjacent for 2H:1V fill slopes utilize 6-in. x 8-in. by 6.5-ft long, WP posts installed at half-post spacing, or on 37.5 in. centers.

[A] McGhee, M.D., Lechtenberg. K.A., Bielenberg, R.W., Faller, R.K., Sicking. D.L., and Reid, J.D., *Dynamic Impact Testing of Wood Posts for the Midwest Guardrail System (MGS) Placed Adjacent to a 2H:1V Fill Slope*, Midwest Roadside Safety Facility, University of Nebraska-Lincoln, Research Report No. TRP-3-234-10, December 2010.

[B] Rohde, J.R., Hascall, J.A., Polivka, K.A., Faller, R.K., and Sicking, D.L., *Dynamic Testing of Wooden Guardrail Posts – White and Red Pine Species Equivalency Study*, Midwest Roadside Safety Facility, University of Nebraska-Lincoln, Research Report No. TRP-03-154-04, September 2004.

## Appendix G. Equivalent White Pine CRT Post Calculations

CRT posts were designed to reduce the weak-axis bending capacity of a wood post while maintaining a relatively high strong-axis bending strength. These specialized posts were designed utilizing Southern Yellow Pine (SYP) material. Thus, the use of weaker White Pine material properties would not be conducive to the standard CRT post design as different strengths would be observed in both the strong and weak axes. Therefore, the White Pine CRT post dimensions were altered to provide similar characteristics to a SYP CRT post.

In a recent study by Arens[C], SYP CRT posts were subjected to numerous dynamic bogie impact tests. The strong-axis impact results from this study are summarized in Table G-1. Utilizing the calculated average modulus of rupture (MOR) of 4.36 ksi and the standard dimensions of the CRT post, the weak-axis bending strength was calculated to be 117.7 k-in. (or a maximum load of 4.73 kips at an impact height of 24⅞ in.).

Table G-1. Strong-Axis CRT Post Testing Results for SYP[C]

| Test No. | Width (in.) | Depth (in.) | Hole Diameter (in.) | $I_x$ (in.$^4$) | $S_x$ (in.$^3$) | Peak Force (kips) | Max. Moment (k-in.) | MOR (ksi) |
|---|---|---|---|---|---|---|---|---|
| MNCRT-1 | 6 | 8 | 3.5 | 234.6 | 58.6 | 9.91 | 246.5 | 4.2 |
| MNCRT-2 | 6 | 8 | 3.5 | 234.6 | 58.6 | 13.31 | 331.1 | 5.65 |
| MNCRT-3 | 6 | 8 | 3.5 | 234.6 | 58.6 | 7.58 | 188.6 | 3.22 |
| | | | | | Average: | 10.27 | 255.4 | 4.36 |

Three design criteria were used for determining an equivalent White Pine CRT post. First, the strong-axis bending strength/capacity had to be equal to or greater than the average strength values calculated from the recent SYP CRT bogie testing results shown in Table G-1. Second, the weak-axis bending strength/capacity was to be within 10 percent of the calculated SYP CRT values, 117.7 k-in. or a peak force of 4.73 kips. Finally, the width of the post was to remain at 6 in. to ensure that the soil resistance was not altered for strong-axis rotation. An MOR

value of 2.73 ksi was used as the material strength for White Pine timber. This value was taken from a research report by Rohde in which 30 White Pine posts were subjected to dynamic bogie testing[D].

All of these design criteria were satisfied by increasing the post depth from 8 in. to 10 in., as shown in Table G-2. Thus, the recommended equivalent 6-ft long White Pine CRT post should have a 6-in. x 10-in. cross section with two 3.5-in diameter holes through the center of the 10-in. face.

Table G-2. Strength Calculations for Equivalent White Pine CRT Post

| Direction | Width (in.) | Depth (in.) | Hole Diameter (in.) | I ($in.^4$) | MOR (ksi) | Peak Force (kips) | Max. Moment (k-in.) | % of SYP CRT |
|---|---|---|---|---|---|---|---|---|
| Strong Axis | 6 | 8 | 3.5 | 234.6 | 2.73 | 10.5 | 261.3 | 102.2% |
| Weak Axis | 8 | 6 | 3.5 | 234.6 | 2.73 | 4.3 | 106.5 | 90.5% |

[C] – Arens, S.W., Faller, R.K., Rohde, J.R., and Polivka, K.A., *Dynamic Impact Testing of CRT Wood Posts in a Rigid Sleeve*, Midwest Roadside Safety Facility, University of Nebraska Lincoln, Research Report No. TRP-03-198-08, April 2008.

[D] – Rohde, J.R., Hascall, J.A., Polivka, K.A., Faller, R.K., and Sicking, D.L., *Dynamic Testing of Wooden Guardrail Posts – White and Red Pine Species Equivalency Study*, Midwest Roadside Safety Facility, University of Nebraska-Lincoln, Research Report No. TRP-03-154-04, September 2004.

# END OF DOCUMENT