# PERFORMANCE EVALUATION OF THE MIDWEST GUARDRAIL SYSTEM – UPDATE TO NCHRP 350 TEST NO. 3-11 WITH 28" C.G. HEIGHT (2214MG-2)


Submitted by

Karla A. Polivka, M.S.M.E., E.I.T.
Research Associate Engineer

Ronald K. Faller, Ph.D., P.E.
Research Assistant Professor

Dean L. Sicking, Ph.D., P.E.
Professor and MwRSF Director

John R. Rohde, Ph.D., P.E.
Associate Professor

Bob W. Bielenberg, M.S.M.E., E.I.T.
Research Associate Engineer

John D. Reid, Ph.D.
Associate Professor

**MIDWEST ROADSIDE SAFETY FACILITY**
University of Nebraska-Lincoln
527 Nebraska Hall
Lincoln, Nebraska 68588-0529
(402) 472-6864



Submitted to

**NATIONAL COOPERATIVE HIGHWAY RESEARCH PROGRAM**
Transportation Research Board
National Research Council
2101 Constitution Avenue, N.W.
Washington, D.C. 20418

MwRSF Research Report No. TRP-03-171-06

October 11, 2006

**Technical Report Documentation Page**

| 1. Report No. | 2. | 3. Recipient's Accession No. |
|---|---|---|
| TRP-03-171-06 | | |

| 4. Title and Subtitle | 5. Report Date |
|---|---|
| Performance Evaluation of the Midwest Guardrail System – Update to NCHRP 350 Test No. 3-11 with 28" C.G. Height (2214MG-2) | October 11, 2006 |
| | 6. |

| 7. Author(s) | 8. Performing Organization Report No. |
|---|---|
| Polivka, K.A., Faller, R.K., Sicking, D.L., Rohde, J.R., Bielenberg, B.W., and Reid, J.D. | TRP-03-171-06 |

| 9. Performing Organization Name and Address | 10. Project/Task/Work Unit No. |
|---|---|
| Midwest Roadside Safety Facility (MwRSF)<br>University of Nebraska-Lincoln<br>527 Nebraska Hall<br>Lincoln, NE 68588-0529 | |
| | 11. Contract © or Grant (G) No.<br>NCHRP 22-14(2) |

| 12. Sponsoring Organization Name and Address | 13. Type of Report and Period Covered |
|---|---|
| National Cooperative Highway Research Program<br>Transportation Research Board<br>National Research Council<br>2101 Constitution Avenue, N.W.<br>Washington, D.C. 20418 | Final Report 2004-2006 |
| | 14. Sponsoring Agency Code |

15. Supplementary Notes

Prepared in cooperation with U.S. Department of Transportation, Federal Highway Administration

16. Abstract (Limit: 200 words)

Based on the proposed changes to the National Cooperative Highway Research Program (NCHRP) Report No. 350 guidelines, NCHRP Project 22-14(2) researchers deemed it appropriate to evaluate a strong-post W-beam guardrail systems prior to finalizing the new crash testing procedures and guidelines. For this effort, the Midwest Guardrail System (MGS) was selected for evaluation. One full-scale vehicle crash test was performed on the longitudinal barrier system in accordance with the Test Level 3 (TL-3) requirements presented in the Update to NCHRP Report No. 350. For this test, a 2270P pickup truck vehicle, which was a ½-ton, four-door vehicle with a 711 mm (28 in.) c.g. height, was used.

The MGS system, mounted at the metric top rail height of 787 mm (31.0 in.), provided an acceptable safety performance when impacted by the ½-ton, four-door pickup truck, thus meeting the proposed TL-3 requirements presented in the Update to NCHRP Report No. 350.

| 17. Document Analysis/Descriptors | 18. Availability Statement |
|---|---|
| Highway Safety, Roadside Appurtenances, Longitudinal Barriers, Guardrail, Crash Test, Compliance Test, NCHRP 350 Update | No restrictions. Document available from: National Technical Information Services, Springfield, Virginia 22161 |

| 19. Security Class (this report) | 20. Security Class (this page) | 21. No. of Pages | 22. Price |
|---|---|---|---|
| Unclassified | Unclassified | 69 | |

## DISCLAIMER STATEMENT

The contents of this report reflect the views of the authors who are responsible for the facts and the accuracy of the data presented herein. The contents do not necessarily reflect the official views nor policies of the National Research Council of the Transportation Research Board nor the Federal Highway Administration. This report does not constitute a standard, specification, or regulation.

## ACKNOWLEDGMENTS

The authors wish to acknowledge several sources that made a contribution to this project: (1) the National Research Council of the Transportation Research Board for sponsoring this project; and (2) MwRSF personnel for constructing the barrier and conducting the crash test.

A special thanks is also given to the following individuals who made a contribution to the completion of this research project.

**Midwest Roadside Safety Facility**

J.C. Holloway, M.S.C.E., E.I.T., Research Manager
C.L. Meyer, B.S.M.E., E.I.T., Research Engineer II
A.T. Russell, B.S.B.A., Laboratory Mechanic II
K.L. Krenk, B.S.M.A, Field Operations Manager
A.T. McMaster, Laboratory Mechanic I
Undergraduate and Graduate Assistants

**Transportation Research Board**

Charles W. Niessner, Senior Program Officer
NCHRP 22-14(2) Panel Members

**Federal Highway Administration**

John Perry, P.E., Nebraska Division Office
Danny Briggs, Nebraska Division Office

**Dunlap Photography**

James Dunlap, President and Owner

## TABLE OF CONTENTS

Page

TECHNICAL REPORT DOCUMENTATION PAGE . . . . . i

DISCLAIMER STATEMENT . . . . . ii

ACKNOWLEDGMENTS . . . . . iii

TABLE OF CONTENTS . . . . . iv
List of Figures . . . . . vi
List of Tables . . . . . viii

1 INTRODUCTION . . . . . 1
1.1 Problem Statement . . . . . 1
1.2 Objective . . . . . 2
1.3 Scope . . . . . 2

2 TEST REQUIREMENTS AND EVALUATION CRITERIA . . . . . 3
2.1 Test Requirements . . . . . 3
2.2 Evaluation Criteria . . . . . 3

3 TEST CONDITIONS . . . . . 6
3.1 Test Facility . . . . . 6
3.2 Vehicle Tow and Guidance System . . . . . 6
3.3 Test Vehicles . . . . . 6
3.4 Data Acquisition Systems . . . . . 9
3.4.1 Accelerometers . . . . . 9
3.4.2 Rate Transducers . . . . . 11
3.4.3 High-Speed Photography . . . . . 11
3.4.4 Pressure Tape Switches . . . . . 12

4 DESIGN DETAILS . . . . . 14

5 CRASH TEST . . . . . 25
5.1 Test 2214MG-2 . . . . . 25
5.2 Test Description . . . . . 25
5.3 Barrier Damage . . . . . 26
5.4 Vehicle Damage . . . . . 27
5.5 Occupant Risk Values . . . . . 28
5.6 Discussion . . . . . 29

6 SUMMARY AND CONCLUSIONS . . . . . 44

7 REFERENCES . . . . . 46

8 APPENDICES . . . . . 47
APPENDIX A - English-Unit System Drawings . . . . . 48
APPENDIX B - Test Summary Sheet in English Units . . . . . 55
APPENDIX C - Occupant Compartment Deformation Data, Test 2214MG-2 . . . . . 57
APPENDIX D - Accelerometer and Rate Transducer Data Analysis, Test 2214MG-2 . 62

## List of Figures

Page

1. Test Vehicle, Test 2214MG-2 . . . . . 7
2. Vehicle Dimensions, Test 2214MG-2 . . . . . 8
3. Vehicle Target Locations, Test 2214MG-2 . . . . . 10
4. Location of High-Speed Cameras, Test 2214MG-2 . . . . . 13
5. Layout for Midwest Guardrail System . . . . . 16
6. Midwest Guardrail System Rail Details . . . . . 17
7. Midwest Guardrail System Post Details . . . . . 18
8. Midwest Guardrail System Anchorage Details . . . . . 19
9. Midwest Guardrail System Anchorage Details . . . . . 20
10. Midwest Guardrail System Anchorage Details . . . . . 21
11. Midwest Guardrail System . . . . . 22
12. Midwest Guardrail System . . . . . 23
13. Midwest Guardrail System . . . . . 24
15. Additional Sequential Photographs, Test 2214MG-2 . . . . . 31
16. Additional Sequential Photographs, Test 2214MG-2 . . . . . 32
17. Additional Sequential Photographs, Test 2214MG-2 . . . . . 33
18. Additional Sequential Photographs, Test 2214MG-2 . . . . . 34
19. Documentary Photographs, Test 2214MG-2 . . . . . 35
20. Documentary Photographs, Test 2214MG-2 . . . . . 36
21. Impact Location, Test 2214MG-2 . . . . . 37
22. Vehicle Final Position and Trajectory Marks, Test 2214MG-2 . . . . . 38
23. Midwest Guardrail System Barrier Damage, Test 2214MG-2 . . . . . 39
24. Guardrail Damage Between Post Nos. 12 and 17, Test 2214MG-2 . . . . . 40
25. Post Nos. 12 through 17 Damage, Test 2214MG-2 . . . . . 41
26. Vehicle Damage, Test 2214MG-2 . . . . . 42
27. Vehicle Damage, Test 2214MG-2 . . . . . 43
A-1. Layout of Midwest Guardrail System Design (English) . . . . . 49
A-2. Midwest Guardrail System Rail Details (English) . . . . . 50
A-3. Midwest Guardrail System Post Details (English) . . . . . 51
A-4. Midwest Guardrail System Anchorage Details (English) . . . . . 52
A-5. Midwest Guardrail System Anchorage Details (English) . . . . . 53
A-6. Midwest Guardrail System Anchorage Details (English) . . . . . 54
B-1. Summary of Test Results and Sequential Photographs (English), Test 2214MG-2 . . . . . 56
C-1. Occupant Compartment Deformation Data - Set 1, Test 2214MG-2 . . . . . 58
C-2. Occupant Compartment Deformation Data - Set 2, Test 2214MG-2 . . . . . 59
C-3. Occupant Compartment Deformation Index (OCDI), Test 2214MG-2 . . . . . 60
C-4. NASS Crush Data, Test 2214MG-2 . . . . . 61
D-1. Graph of Longitudinal Deceleration, Test 2214MG-2 . . . . . 63
D-2. Graph of Longitudinal Occupant Impact Velocity, Test 2214MG-2 . . . . . 64
D-3. Graph of Longitudinal Occupant Displacement, Test 2214MG-2 . . . . . 65
D-4. Graph of Lateral Deceleration, Test 2214MG-2 . . . . . 66

D-5. Graph of Lateral Occupant Impact Velocity, Test 2214MG-2 . . . . . 67
D-6. Graph of Lateral Occupant Displacement, Test 2214MG-2 . . . . . 68
D-7. Graph of Roll, Pitch, and Yaw Angular Displacements, Test 2214MG-2 . . . . . 69

## List of Tables

Page

1. Update to NCHRP Report No. 350 Test Level 3 Crash Test Conditions . . . . . 4
2. Update to NCHRP Report No. 350 Evaluation Criteria for Crash Tests . . . . . 5
3. Summary of Safety Performance Evaluation Results . . . . . 45

# 1 INTRODUCTION

## 1.1 Problem Statement

In the late 1990s, roadside safety experts, State DOT representatives, Federal government officials, and industry personnel began discussions and preparations for updating the National Cooperative Highway Research Program (NCHRP) Report No. 350 safety performance guidelines (1). The new guidelines would improve upon existing test procedures, consider changes in the vehicle fleet, provide criteria for new roadside hardware categories and re-evaluate the appropriateness of the impact conditions.

In 1997, NCHRP Project 22-14, entitled *Improvement of the Procedures for the Safety Performance Evaluation of Roadside Features*, was initiated with the intent to: (1) evaluate the relevance and efficacy of the crash testing procedures, (2) assess the needs for updating NCHRP Report No. 350, and (3) provide recommended strategies for their implementation. Following the completion of this NCHRP study at the Texas Transportation Institute (TTI) in 2001, a follow-on research study was begun in 2002. NCHRP Project 22-14(2), entitled *Improved Procedures for Safety Performance Evaluation of Roadside Features*, was undertaken by Midwest Roadside Safety Facility (MwRSF) researchers with the objectives to: (1) prepare the revised crash testing guidelines, (2) assess the effects of any proposed guidelines, and (3) identify research needs for future improvements to the procedures.

Consequently, it was anticipated that a number of revisions would be incorporated into the Update of NCHRP Report No. 350 guidelines (2). For example, changes in the vehicle fleet have resulted in the need to reassess the small car and pickup truck test vehicles. Accordingly, new, heavier test vehicles have been selected for both the small car and light truck classes of vehicles.

Additionally, during the second study, researchers determined that the 100 km/h (62.1 mph) impact speed and 25 degree impact angle would remain the same as used in NCHRP Report No. 350 for the large passenger vehicle class impacting longitudinal barriers. However, the impact angle for the small car impact condition would increase from 20 to 25 degrees for evaluating longitudinal barriers and the length-of-need for guardrail terminals. The effects of any changes to vehicle specifications or impact conditions must be understood before the safety performance evaluation guidelines are finalized. Therefore, a series of full-scale crash tests on NCHRP Report No. 350 approved systems were to be conducted with the new test vehicles and impact conditions.

**1.2 Objective**

The objective of this research project was to evaluate the safety performance of the Midwest Guardrail System (MGS) when full-scale vehicle crash tested according to the test designation no. 3-11 criteria presented in the Update of NCHRP Report No. 350 guidelines (2).

**1.3 Scope**

The research objective was achieved through the completion of several tasks. First, a full-scale vehicle crash test was performed on the MGS system. The crash test utilized a pickup truck, weighing approximately 2,270 kg (5,004 lbs) with a center of gravity (c.g.) height of 711 mm (28 in.). The target impact conditions for the test were an impact speed of 100.0 km/h (62.1 mph) and an impact angle of 25 degrees. Next, the test results were analyzed, evaluated, and documented. Finally, conclusions and recommendations were made that pertain to the safety performance of the MGS system relative to the test performed.

# 2 TEST REQUIREMENTS AND EVALUATION CRITERIA

## 2.1 Test Requirements

Historically, longitudinal barriers, such as W-beam guardrail systems, have been required to satisfy impact safety standards in order to be accepted by the Federal Highway Administration (FHWA) for use on National Highway System (NHS) construction projects or as a replacement for existing designs not meeting current safety standards. In recent years, these safety standards have consisted of the guidelines and procedures published in NCHRP Report No. 350 (1). However, NCHRP Project 22-14(2) generated revised testing procedures and guidelines for use in the evaluation of roadside safety appurtenances and were presented in the draft report entitled, *NCHRP Report 350 Update* (2). Therefore, according to Test Level 3 (TL-3) of the Update to NCHRP Report No. 350, longitudinal barrier systems must be subjected to two full-scale vehicle crash tests. The two full-scale crash tests are as follows:

1. Test Designation 3-10. An 1,100-kg (2,425-lb) passenger car impacting at a nominal speed and angle of 100.0 km/h (62.1 mph) and 25 degrees, respectively.

2. Test Designation 3-11. A 2,270-kg (5,004-lb) pickup truck impacting at a nominal speed and angle of 100.0 km/h (62.1 mph) and 25 degrees, respectively.

The test conditions for TL-3 longitudinal barriers are summarized in Table 1. Test Designation 3-11 was conducted for the MGS system described herein.

## 2.2 Evaluation Criteria

According to the Update to NCHRP Report No. 350, the evaluation criteria for full-scale vehicle crash testing are based on three appraisal areas: (1) structural adequacy; (2) occupant risk; and (3) vehicle trajectory after collision. Criteria for structural adequacy are intended to evaluate the

ability of the barrier to contain, redirect, or allow controlled vehicle penetration in a predictable manner. Occupant risk evaluates the degree of hazard to occupants in the impacting vehicle. Vehicle trajectory after collision is a measure of the potential for the post-impact trajectory of the vehicle to cause subsequent multi-vehicle accidents. This criterion also indicates the potential safety hazard for the occupants of other vehicles or the occupants of the impacting vehicle when subjected secondary collisions with other fixed objects. These three evaluation criteria are summarized in Table 2 and defined in greater detail in the Update to NCHRP Report No. 350 report (2). The full-scale vehicle crash tests were conducted and reported in accordance with the procedures provided in the Update to NCHRP Report No. 350.

Table 1. Update to NCHRP Report No. 350 Test Level 3 Crash Test Conditions

| Test Article | Test Designation | Test Vehicle | Impact Conditions | | | Evaluation Criteria [1] |
|---|---|---|---|---|---|---|
| | | | Speed | | Angle (degrees) | |
| | | | (km/h) | (mph) | | |
| Longitudinal Barrier | 3-10 | 1100C | 100 | 62.1 | 25 | A,D,F,H,I,M |
| | 3-11 | 2270P | 100 | 62.1 | 25 | A,D,F,H,I,M |

[1] Evaluation criteria explained in Table 2.

Table 2. Update to NCHRP Report No. 350 Evaluation Criteria for Crash Tests

| | |
|---|---|
| Structural Adequacy | A. Test article should contain and redirect the vehicle or bring the vehicle to a controlled stop; the vehicle should not penetrate, underride, or override the installation although controlled lateral deflection of the test article is acceptable. |
| Occupant Risk | D. Detached elements, fragments or other debris from the test article should not penetrate or show potential for penetrating the occupant compartment, or present an undue hazard to other traffic, pedestrians, or personnel in a work zone. Deformations of, or intrusions into, the occupant compartment should not exceed limits set forth in Section 5.3 and Appendix E of the Update to NCHRP Report No. 350. |
| | F. The vehicle should remain upright during and after collision. |
| | H. Longitudinal and lateral occupant impact velocities should fall below the preferred value of 9.0 m/s (29.5 ft/s), or at least below the maximum allowable value of 12.0 m/s (39.4 ft/s). |
| | I. Longitudinal and lateral occupant ridedown accelerations should fall below the preferred value of 15 Gs, or at least below the maximum allowable value of 20.0 Gs. |
| Vehicle Trajectory | M. After impact, the vehicle shall exit the barrier within the exit box. |

# 3 TEST CONDITIONS

## 3.1 Test Facility

The testing facility is located at the Lincoln Air Park on the northwest side of the Lincoln Municipal Airport and is approximately 8.0 km (5 mi.) northwest of the University of Nebraska-Lincoln.

## 3.2 Vehicle Tow and Guidance System

A reverse cable tow system with a 1:2 mechanical advantage was used to propel the test vehicle. The distance traveled and the speed of the tow vehicle were one-half that of the test vehicle. The test vehicle was released from the tow cable before impact with the barrier system. A digital speedometer was located on the tow vehicle to increase the accuracy of the test vehicle impact speed.

A vehicle guidance system developed by Hinch (3) was used to steer the test vehicle. A guide-flag, attached to the front-right wheel and the guide cable, was sheared off before impact with the barrier system. The 9.5-mm (0.375-in.) diameter guide cable was tensioned to approximately 15.6 kN (3,500 lbf), and supported laterally and vertically every 30.48 m (100 ft) by hinged stanchions. The hinged stanchions stood upright while holding up the guide cable, but as the vehicle was towed down the line, the guide-flag struck and knocked each stanchion to the ground. For test 2214MG-2, the vehicle guidance system was 322 m (1,055 ft) long.

## 3.3 Test Vehicles

For test 2214MG-2, a 2002 Dodge Ram 1500 Quad Cab pickup truck was used as the test vehicle. The test inertial and gross static weights were 2,268 kg (5,000 lbs). The test vehicle is shown in Figure 1, and vehicle dimensions are shown in Figure 2.

Figure 1. Test Vehicle, Test 2214MG-2

Date: 10/6/04 Test Number: 2214MG-2 Model: Ram 1500 Q.C.

Make: Dodge Vehicle I.D.#: 1D7HA18V02551166

Tire Size: P265/70 R17 Year: 2002 Odometer: 64749

*(All Measurements Refer to Impacting Side)

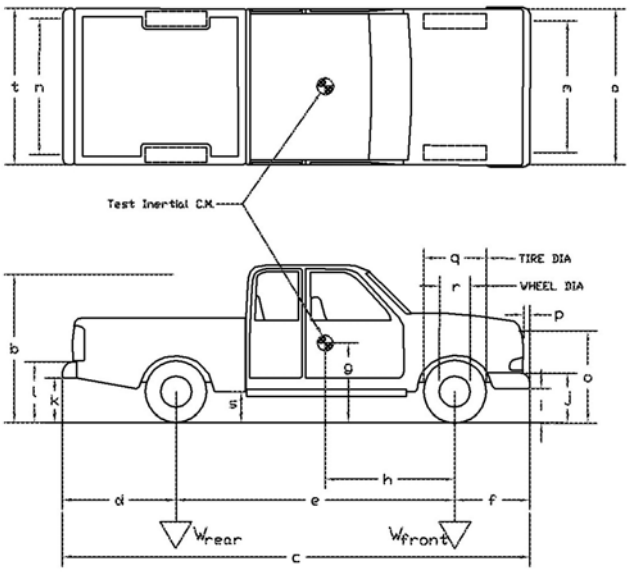


Vehicle Geometry – mm (in.)

| | | | |
|---|---|---|---|
| a | 1981 (78.0) | b | 1899 (74.75) |
| c | 5779 (227.5) | d | 1207 (47.5) |
| e | 3562 (140.25) | f | 1010 (39.75) |
| g | 719 (28.3) | h | 1585 (62.4) |
| i | 286 (11.25) | j | 635 (25.0) |
| k | 533 (21.0) | l | 749 (29.5) |
| m | 1730 (68.125) | n | 1715 (67.5) |
| o | 1092 (43.0) | p | 102 (4.0) |
| q | 794 (31.25) | r | 470 (18.5) |
| s | 406 (16.0) | t | 1905 (75.0) |

Wheel Center Height Front 381 (15.0)

Wheel Center Height Rear 387 (15.25)

Wheel Well Clearance (FR) 889 (35.0)

Wheel Well Clearance (RR) 972 (38.25)

Frame Height (FR) 451 (17.75)

Frame Height (RR) 651 (25.625)

| Weights kg (lbs) | Curb | Test Inertial | Gross Static |
|---|---|---|---|
| $W_{front}$ | 1285 (2833) | 1259 (2775) | 1259 (2775) |
| $W_{rear}$ | 1007 (2219) | 1009 (2225) | 1009 (2225) |
| $W_{total}$ | 2292 (5052) | 2268 (5000) | 2268 (5000) |

Engine Type 8 CYL. GAS

Engine Size 4.7 L

Transmission Type:

Automatic or Manual

FWD or RWD or 4WD

Note any damage prior to test: None

Figure 2. Vehicle Dimensions, Test 2214MG-2

The Suspension Method (4) was used to determine the vertical component of the center of gravity (c.g.) for the pickup truck. This method is based on the principle that the c.g. of any freely suspended body is in the vertical plane through the point of suspension. The vehicle was suspended successively in three positions, and the respective planes containing the c.g. were established. The intersection of these planes pinpointed the location of the center of gravity. The longitudinal component of the c.g. was determined using the measured axle weights. The location of the final center of gravity is shown in Figures 1 and 2.

Square black and white-checkered targets were placed on the vehicle to aid in the analysis of the high-speed film and E/cam and Photron video, as shown in Figure 3. Checkered targets were placed on the center of gravity, on the driver's side door, on the passenger's side door, and on the roof of the vehicle. The remaining targets were located for reference so that they could be viewed from the high-speed cameras for film analysis.

The front wheels of the test vehicle were aligned for camber, caster, and toe-in values of zero so that the vehicle would track properly along the guide cable. Two 5B flash bulbs were mounted on both the hood and roof of the vehicle to pinpoint the time of impact with the barrier on the high-speed film, E/cam video, and Photron video. The flash bulbs were fired by a pressure tape switch mounted on the front face of the bumper. A remote-controlled brake system was installed in the test vehicle so the vehicle could be brought safely to a stop after the test.

### 3.4 Data Acquisition Systems

#### 3.4.1 Accelerometers

One triaxial piezoresistive accelerometer system with a range of ±200 Gs was used to measure the acceleration in the longitudinal, lateral, and vertical directions at a sample rate of 10,000

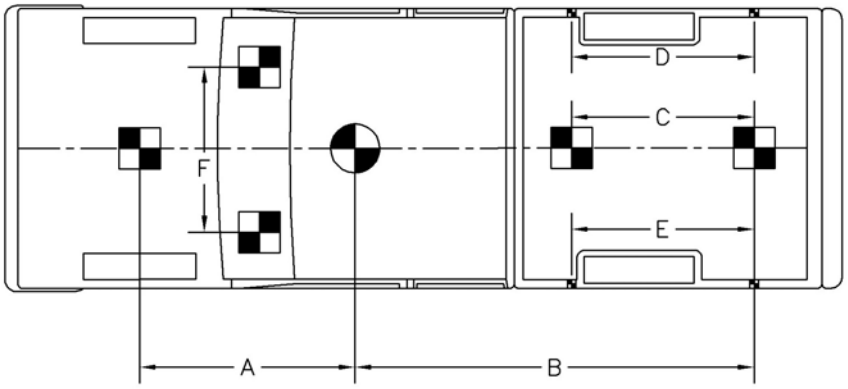


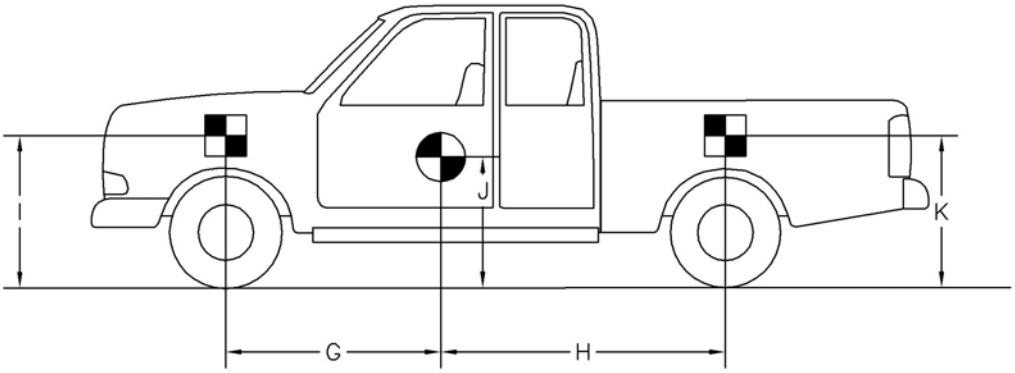


TEST #: 2214MG-2

TARGET GEOMETRY -- mm (in.)

| | | | |
|---|---|---|---|
| A 1899 (74.75) | D 1622 (63.875) | G 1585 (62.4) | J 719 (28.3) |
| B 2619 (103.125) | E 1622 (63.875) | H 1977 (77.85) | K 1076 (42.375) |
| C 1854 (73.0) | F 987 (38.875) | I 997 (39.25) | |

Figure 3. Vehicle Target Locations, Test 2214MG-2

Hz. The environmental shock and vibration sensor/recorder system, Model EDR-4M6, was developed by Instrumented Sensor Technology (IST) of Okemos, Michigan and includes three differential channels as well as three single-ended channels. The EDR-4 was configured with 6 MB of RAM memory and a 1,500 Hz lowpass filter. Computer software, "DynaMax 1 (DM-1)" and "DADiSP", was used to analyze and plot the accelerometer data.

Another triaxial piezoresistive accelerometer system with a range of ±200 Gs was also used to measure the acceleration in the longitudinal, lateral, and vertical directions at a sample rate of 3,200 Hz. The environmental shock and vibration sensor/recorder system, Model EDR-3, was developed by Instrumental Sensor Technology (IST) of Okemos, Michigan. The EDR-3 was configured with 256 kB of RAM memory and a 1,120 Hz lowpass filter. Computer software, "DynaMax 1 (DM-1)" and "DADiSP", was used to analyze and plot the accelerometer data.

### 3.4.2 Rate Transducers

An Analog Systems 3-axis rate transducer with a range of 1,200 degrees/sec in each of the three directions (pitch, roll, and yaw) was used to measure the rates of motion of the test vehicle. The rate transducer was mounted inside the body of the EDR-4M6 and recorded data at 10,000 Hz to a second data acquisition board inside the EDR-4M6 housing. The raw data measurements were then downloaded, converted to the appropriate Euler angles for analysis, and plotted. Computer software, "DynaMax 1 (DM-1)" and "DADiSP", was used to analyze and plot the rate transducer data.

### 3.4.3 High-Speed Photography

For test 2214MG-2, two high-speed 16-mm Red Lake Locam cameras, with operating speeds of approximately 500 frames/sec, were used to film the crash test. Two high-speed Photron

video camera and three high-speed Red Lake E/cam video cameras, all with operating speeds of 500 frames/sec, and six Canon digital video cameras, with a standard operating speed of 29.97 frames/sec, were also used to film the crash test. Camera details and a schematic of all fourteen camera locations for test 2214MG-2 is shown in Figure 4. The Locam films, Photron video, and E/cam videos were analyzed using the Vanguard Motion Analyzer, ImageExpress MotionPlus software, and Redlake Motion Scope software, respectively. Actual camera speed and camera divergence factors were considered in the analysis of the high-speed film.

### 3.4.4 Pressure Tape Switches

For test 2214MG-2, five pressure-activated tape switches, spaced at 2-m (6.56-ft) intervals, were used to determine the speed of the vehicle before impact. Each tape switch fired a strobe light which sent an electronic timing signal to the data acquisition system as the right-front tire of the test vehicle passed over it. Test vehicle speed was determined from electronic timing mark data recorded using the "Test Point" software. Strobe lights and high-speed film analysis are used only as a backup in the event that vehicle speed cannot be determined from the electronic data.

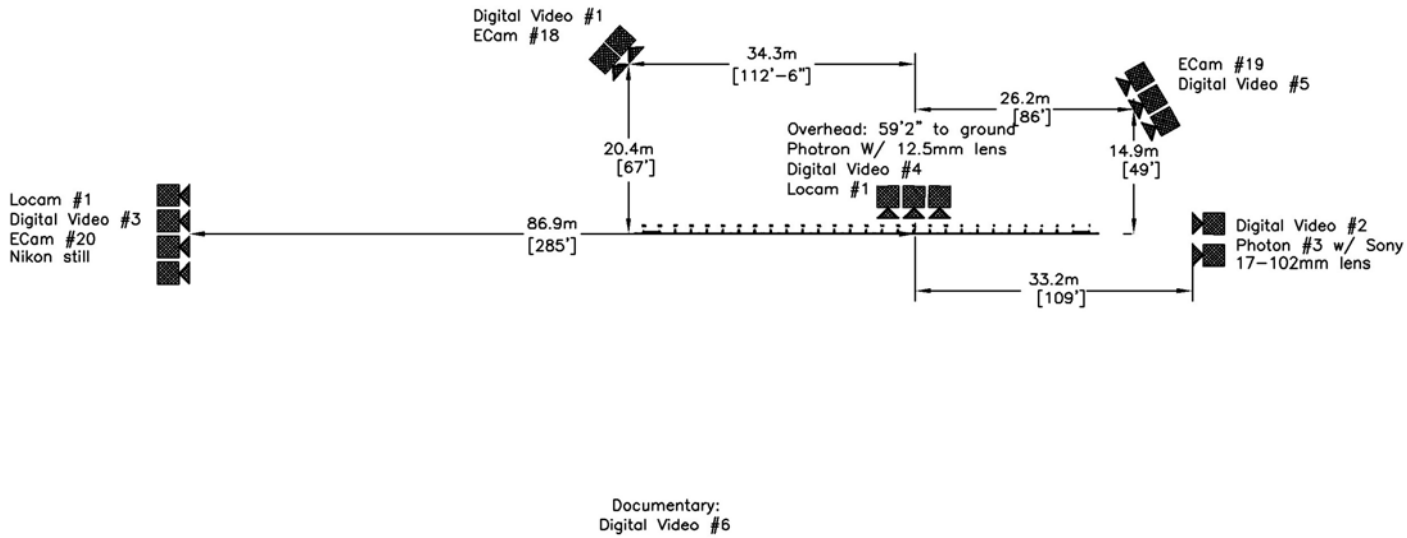


Figure 4. Location of High-Speed Cameras, Test 2214MG-2

# 4 DESIGN DETAILS

The test installation consisted of 55.25 m (181 ft - 3 in.) of standard 2.66-mm (12-gauge) thick W-beam guardrail supported by steel posts, as shown in Figure 5. Anchorage systems similar to those used on tangent guardrail terminals were utilized on both the upstream and downstream ends of the guardrail system. Design details are shown in Figures 5 through 10. The corresponding English-unit drawings are shown in Appendix A. Photographs of the test installation are shown in Figures 11 through 13.

The entire system was constructed with twenty-nine guardrail posts. Post nos. 3 through 27 were galvanized ASTM A36 steel W152x13.4 (W6x9) sections measuring 1,829 mm (6 ft) long. Post nos. 1, 2, 28, and 29 were timber posts measuring 140 mm wide x 190 mm deep x 1,080 mm long (5.5 in. x 7.5 in. x 42.5 in.) and were placed in 1,829-mm (6-ft) long steel foundation tubes, as shown in Figures 6 and 8. The timber posts and foundation tubes were part of anchor systems designed to replicate the capacity of a tangent guardrail terminal.

Post nos. 1 through 29 were spaced 1,905 mm (75 in.) on center with a soil embedment depth of 1,016 mm (40 in.), as shown in Figure 7. The posts were placed in a compacted coarse, crushed limestone material that met Grading B of AASHTO M147-65 (1990) as found in the Update to Report No. 350. For post nos. 3 through 27, 152-mm wide x 305-mm deep x 362-mm long (6-in. x 12-in. x 14.25-in.) wood spacer blockouts were used to block the rail away from the front face of the steel posts.

Standard 2.66-mm (12-gauge) thick W-beam rails with additional post bolt slots at half post spacing intervals were placed between post nos. 1 and 29, as shown in Figures 5 and 6. The W-beam's top rail height was 787 mm (31 in.) with a 632-mm (24 ⅞-in.) center mounting height. The

rail splices have been moved to the center of the span location, as shown in Figures 5 and 6. All lap-splice connections between the rail sections were configured to reduce vehicle snag at the splice during the crash test.

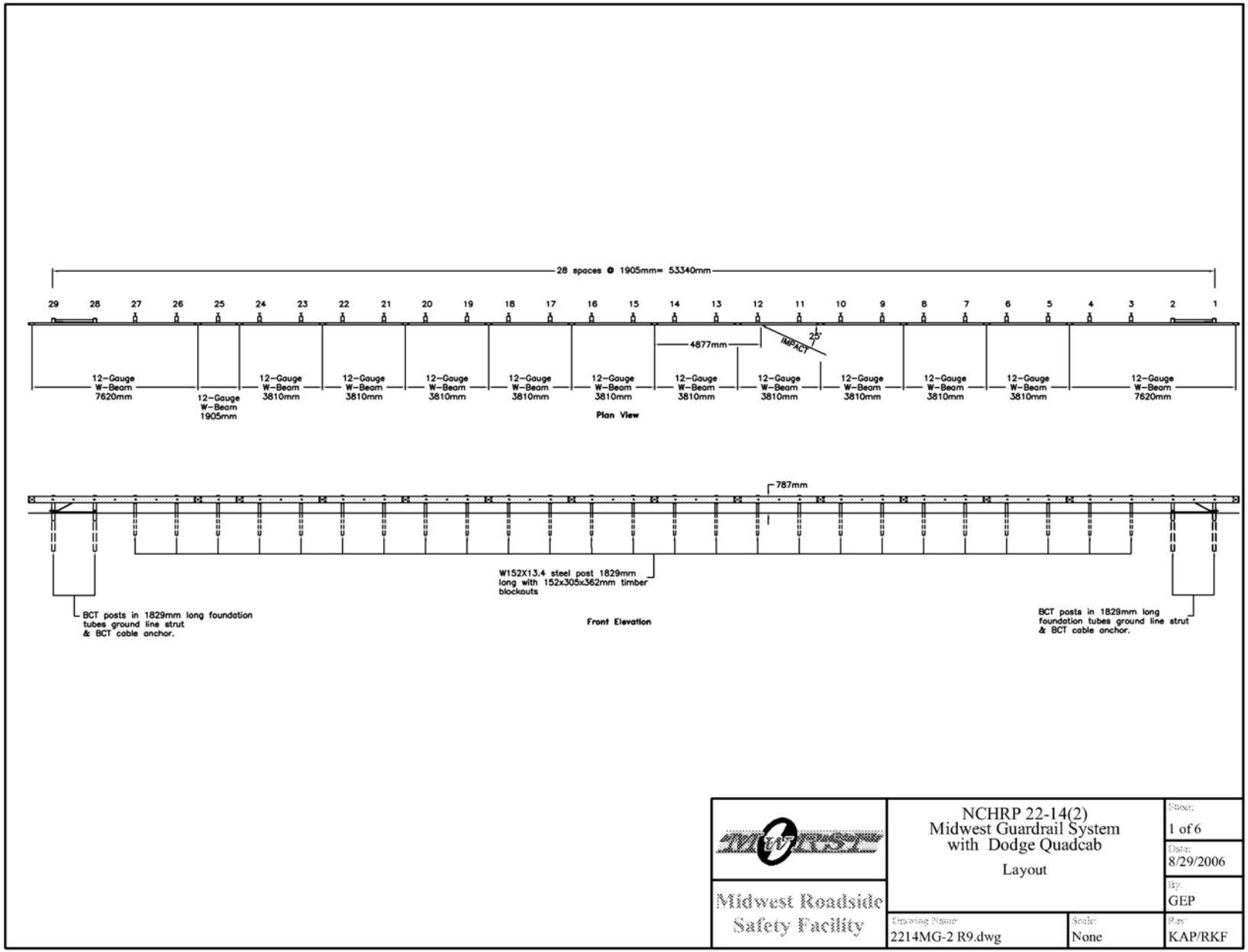


Figure 5. Layout for Midwest Guardrail System

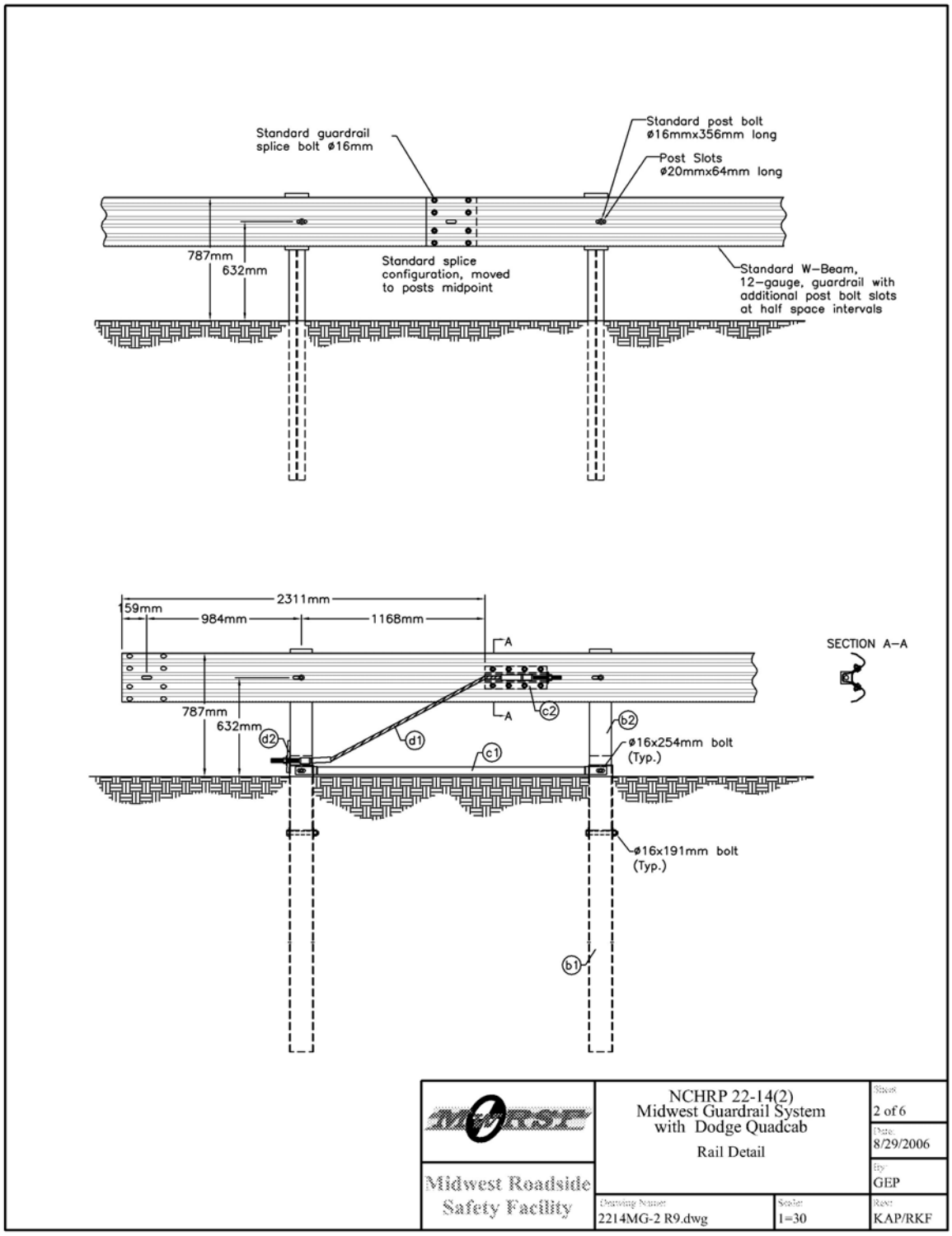


Figure 6. Midwest Guardrail System Rail Details

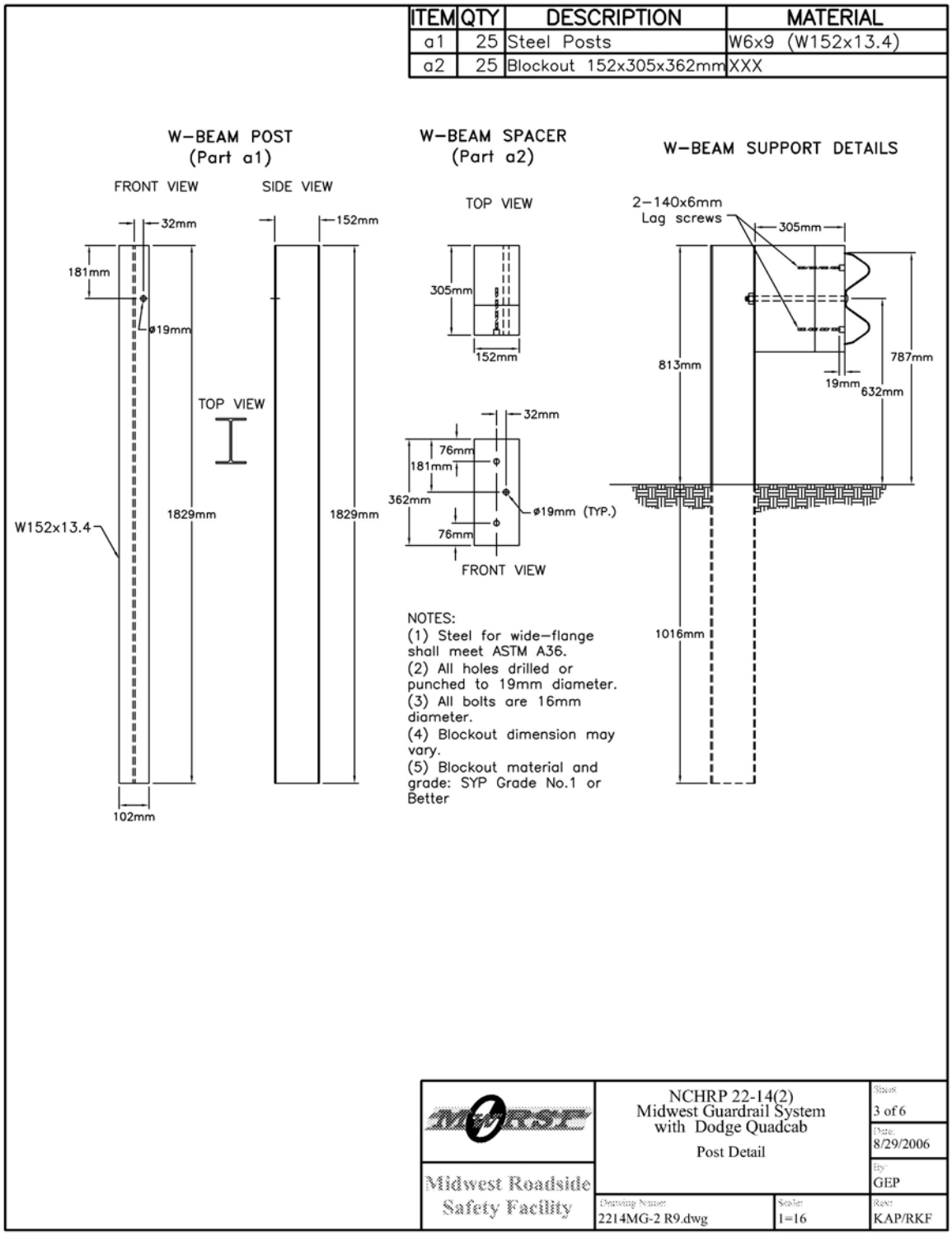


Figure 7. Midwest Guardrail System Post Details

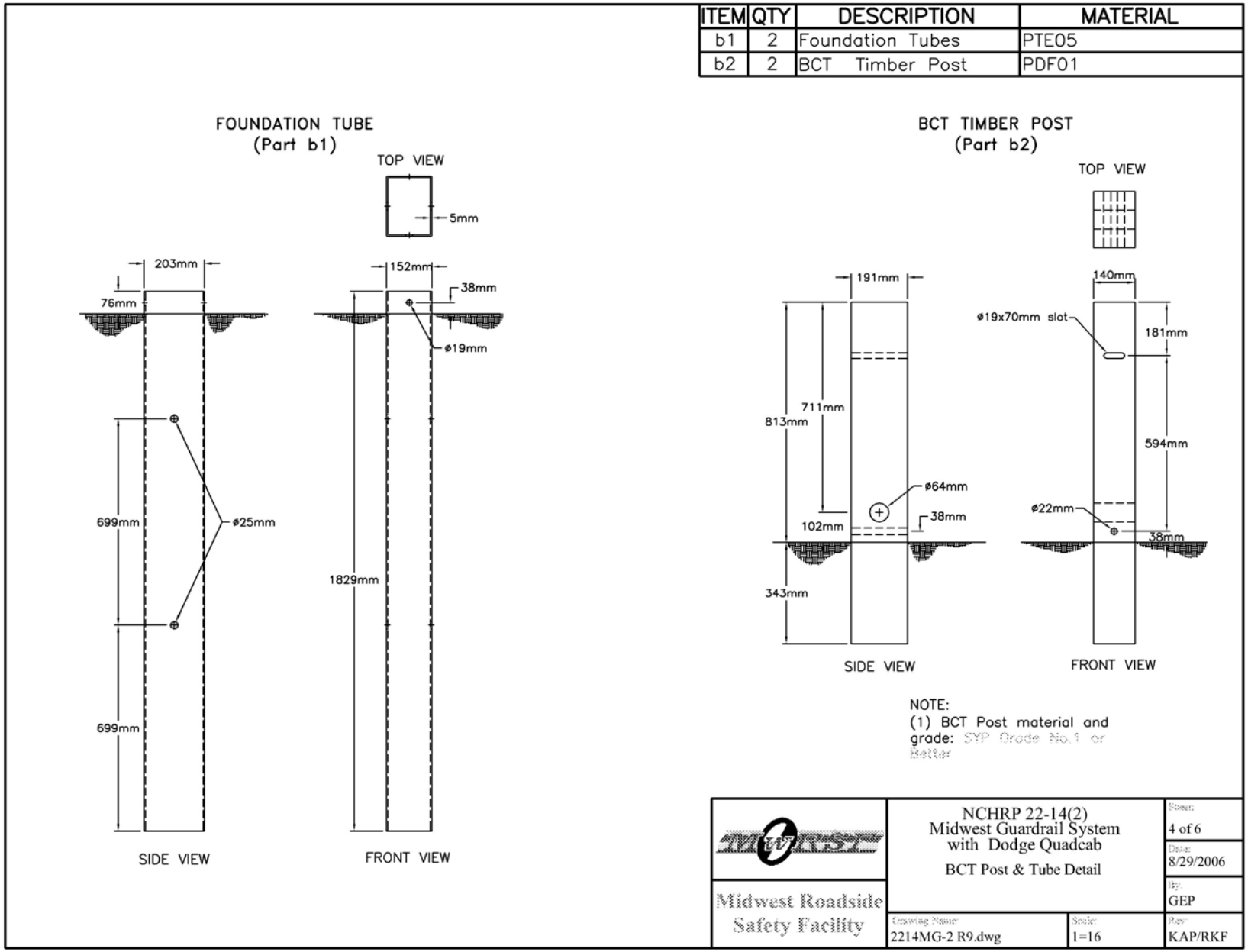


Figure 8. Midwest Guardrail System Anchorage Details

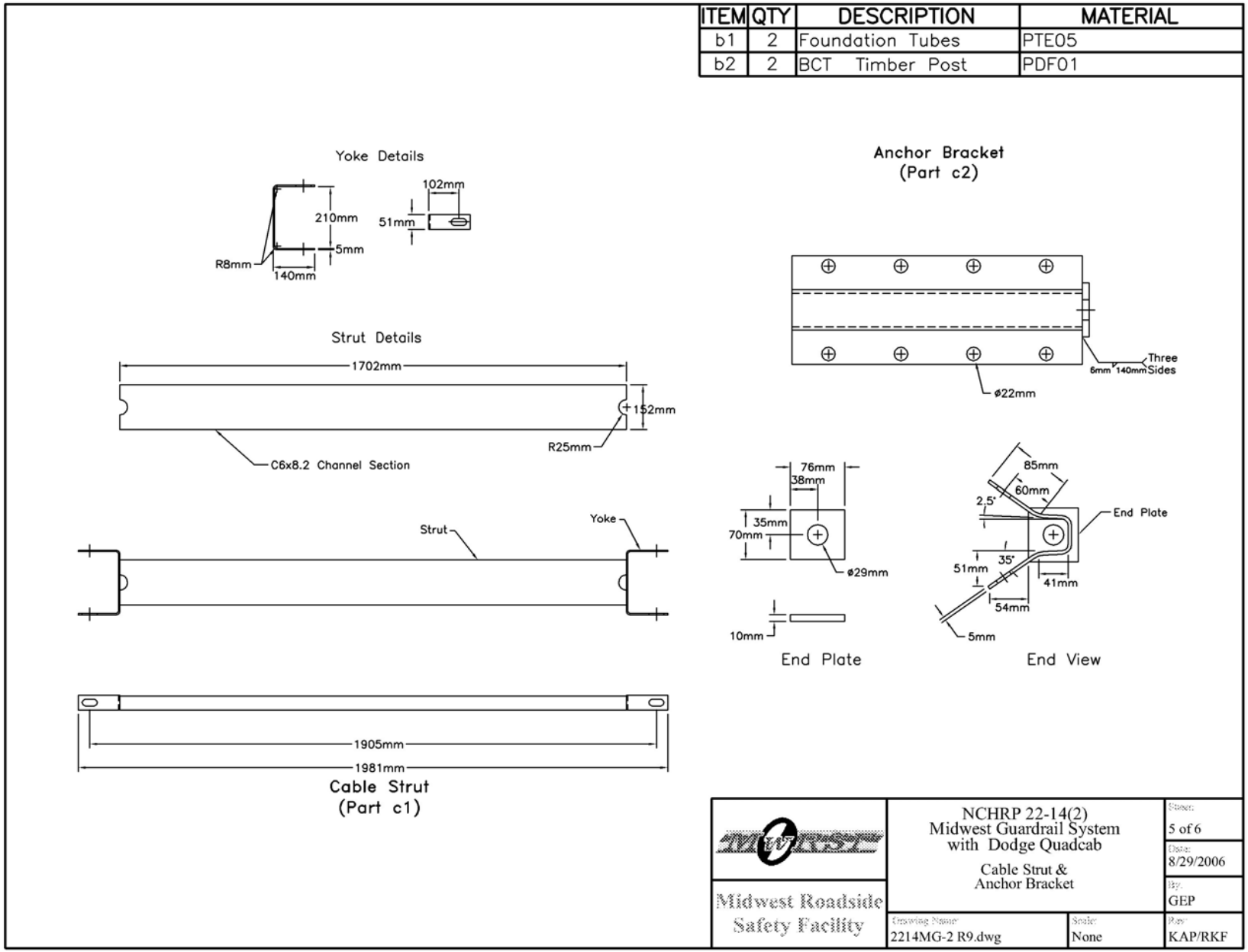


Figure 9. Midwest Guardrail System Anchorage Details

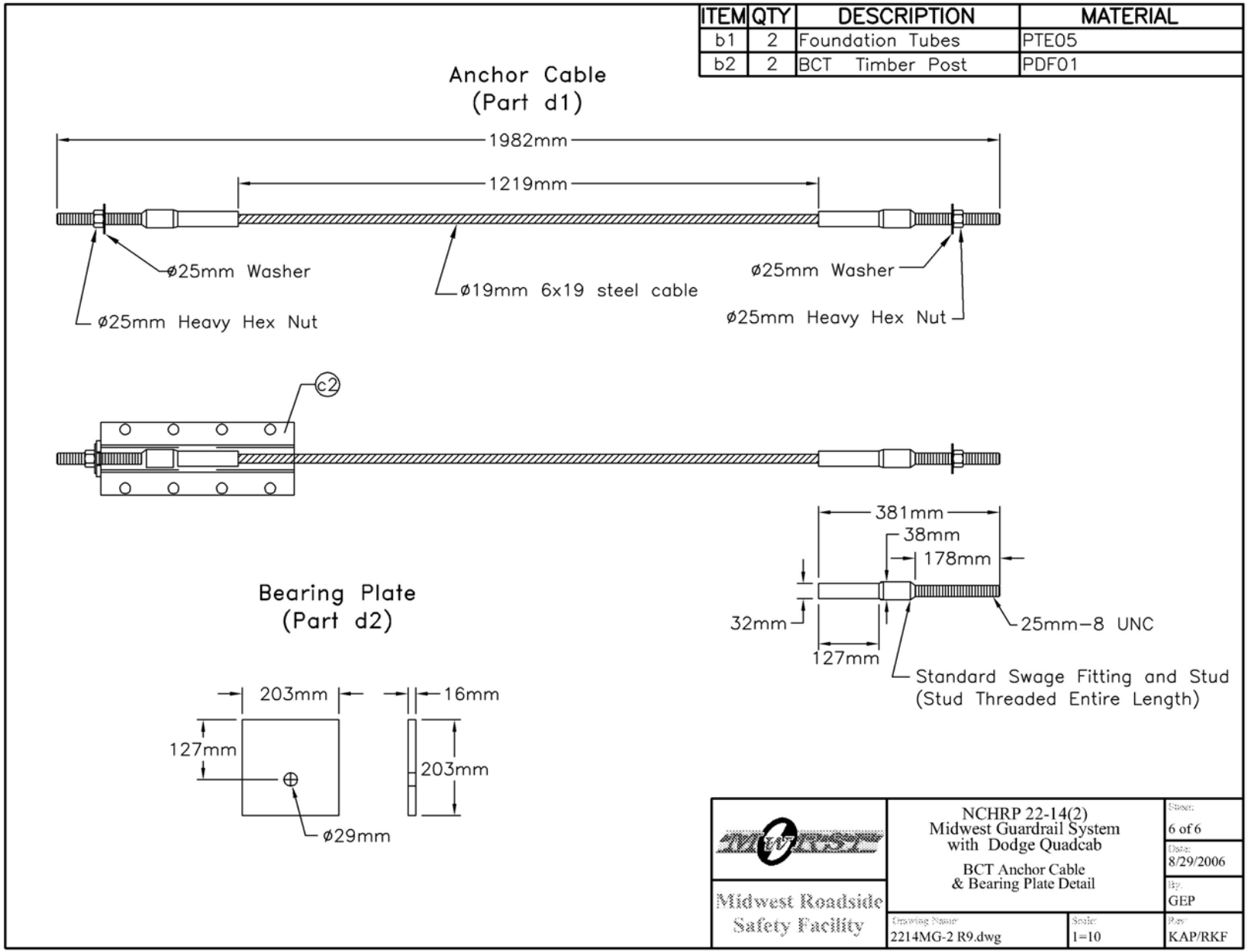


Figure 10. Midwest Guardrail System Anchorage Details

Figure 11. Midwest Guardrail System

Figure 12. Midwest Guardrail System

Figure 13. Midwest Guardrail System

# 5 CRASH TEST

## 5.1 Test 2214MG-2

The 2,268-kg (5,000-lb) pickup truck impacted the Midwest Guardrail System (MGS) at a speed of 101.1 km/h (62.8 mph) and at an angle of 25.5 degrees. A summary of the test results and sequential photographs are shown in Figure 14. The summary of the test results and sequential photographs in English units are shown in Appendix B. Additional sequential photographs are shown in Figures 15 through 18. Documentary photographs of the crash test are shown in Figures 19 and 20.

## 5.2 Test Description

Initial vehicle impact was to occur between post nos. 11 and 12, or 5.21 m (17 ft - 1 in.) upstream from the center of the splice at the midspan between post nos. 14 and 15, as shown in Figure 21. Actual vehicle impact occurred 5.25 m (17 ft - 2.5 in.) upstream from the center of the splice at the midspan between post nos. 14 and 15. At 0.026 sec after impact, the rail deflected backward. At this same time, the right-front corner of the vehicle crushed inward. At 0.072 sec, the right-front corner of the vehicle was located at post no. 13. At this same time, post no. 13 deflected backward. At 0.090 sec, the guardrail disengaged from post no. 13. At this same time, the right-front corner of the vehicle protruded over the rail. At 0.102 sec, the right-front tire contact post no. 13. At 0.140 sec, the guardrail disengaged from post no. 14. At 0.162 sec, the vehicle was in contact with the rail through the right-rear wheel location. At 0.210 sec, the guardrail disengaged from post no. 15. At 0.282 sec, the vehicle became parallel to the guardrail with a resultant velocity of 73.7 km/h (45.8 mph). At this same time, the vehicle rolled slightly counter-clockwise (CCW) toward the rail. At 0.342 sec, the guardrail disengaged from post no. 16. At 0.458 sec, post no. 17 rotated

backward and deflected downstream. At 0.524 sec, the front of the vehicle pitched downward. At 0.622 sec, the rear of the vehicle continued to pitch upward and appears to be riding along the top of the rail. At 0.718 sec, the vehicle exited the guardrail at a trajectory angle of 13.5 degrees and at a resultant velocity of 63.7 km/h (39.6 mph). At 0.910 sec, the vehicle rolled slightly CCW toward the rail as it traveled away from the system. At 1.450 sec, the vehicle ceased to encounter any roll. The vehicle came to rest 47.18 m (154 ft - 9.5 in.) downstream from impact and 15.55 m (51 ft) laterally behind the traffic-side face of the guardrail system. The trajectory and final position of the pickup truck are shown in Figures 14 and 22.

**5.3 Barrier Damage**

Damage to the barrier was moderate, as shown in Figures 23 through 25. Barrier damage consisted of deformed guardrail posts, disengaged wooden blockouts, contact marks on a guardrail section and posts, and deformed W-beam rail. The length of vehicle contact along the MGS system was approximately 10.3 m (33 ft - 8 in.), which spanned from 483 mm (19 in.) upstream from the centerline of post no. 12 through 254 mm (10 in.) downstream from the centerline of post no. 17.

Moderate deformation and flattening of the impacted section W-beam rail occurred between post nos. 12 and 15. Contact marks were found on the guardrail between post nos. 11 and 18. The guardrail buckled at the downstream edge of the blockout at post no. 11. A major buckle point in the guardrail occurred at the upstream edge of post no. 12. Another major buckle in the guardrail occurred at the downstream edge of post no. 17. The guardrail also buckled at 267 mm (10.5 in.) downstream of post no. 18. The lower corrugation of the W-beam rail between post nos. 15 and 16 was bent under. The W-beam was pulled off post nos. 13 through 16. The W-beam rail sustained tearing and significant yielding around the post bolt slots at post nos. 14 and 15, while only minor

yielding occurred around the post bolt slots at post nos. 8 through 13 and 16 through 18. No significant guardrail damage occurred downstream of post no. 19.

Steel post nos. 3 through 12 encountered minor twisting. Post nos. 13 through 15 bent longitudinally downstream at ground line. Post no. 16 rotated both backward and downstream. The web of post no. 16 was also bent. Post no. 17 rotated slightly backward and downstream. Contact marks were found on the top of the front flange of post no. 13 and on the upstream edges of the front and rear flanges of post no. 14. Heavy contact marks were found on the front flange of post no. 15 causing the flange to deform toward the web. Light contact marks were also found on the upstream edges of the front and rear flanges of post no. 15. The post bolts at post nos. 14 and 15 sheared off and disengaged from the post. The upstream and downstream anchorage systems moved slightly moved longitudinally, but the posts in both anchorage systems were not damaged.

The wooden blockout at post no. 16 encountered damage on the lower front face, but remained attached. The wooden blockouts at post nos. 14, 15 were fractured and removed from the post. All the other wooden blockouts remained undamaged.

The permanent set of the barrier system is shown in Figure 23. The maximum lateral permanent set rail deflections were 803 mm (31.625 in.) at the midspan between post nos. 14 and 15, as measured in the field. The maximum lateral dynamic rail and post deflections were 1,114 mm (43.9 in.) at post no. 14 and 694 mm (27.3 in.) at post no. 14, as determined from high-speed digital video analysis. The working width of the system was found to be 1,234 mm (48.6 in.).

**5.4 Vehicle Damage**

Exterior vehicle damage was moderate, as shown in Figures 26 and 27. Occupant compartment deformations to the right side and center of the floorboard were judged insufficient to

cause serious injury to the vehicle occupants. Maximum longitudinal deflections of 19 mm (0.75 in.) were located near the center of the right-side floor pan. Maximum lateral deflections of 6 mm (0.25 in.) were located throughout the right-side floor pan. Maximum vertical deflections of 13 mm (0.5 in.) were located near the center of the right side. Complete occupant compartment deformations and the corresponding locations are provided in Appendix C.

Damage was concentrated on the right-front corner of the vehicle. The right-front quarter panel was deformed inward toward the engine compartment. The right side of the front bumper was flattened and bent back toward the engine compartment. A major gouge along the right side of the vehicle spanned from the front wheel well to the rear of the vehicle. A dent was found in the right-side door. The right-side door shifted and the top of it was ajar. The right corner of the rear bumper encountered minor scratches and dents. The right-front wheel assembly deformed and crushed inward toward the engine compartment. The right-side lower and upper ball joints were fractured. The right-side steering linkage remained attached but was bent around the sway bar to lower control arm connection. The upper control arm was bent. Minor dents were found on the right-front steel rim. The right-front tire was deformed under the vehicle. The sidewall of the right-front tire was torn, and the tire deflated. The right-side headlight, park light, and tail light fractured, and the park light disengaged from the vehicle. Minor deformations were found on the grill and plastic bumper. All window glass remained undamaged. The left-side and rear of the vehicle remained undamaged.

**5.5 Occupant Risk Values**

The longitudinal and lateral occupant impact velocities were determined to be 4.67 m/s (15.32 ft/s) and 4.76 m/s (15.62 ft/s), respectively. The maximum 0.010-sec average occupant ridedown decelerations in the longitudinal and lateral directions were 8.23 Gs and 6.93 Gs,

respectively. It is noted that the occupant impact velocities (OIVs) and occupant ridedown decelerations (ORDs) were within the suggested limits provided in the Update to NCHRP Report No. 350. The THIV and PHD values were determined to be 6.91 m/s (22.67 ft/s) and 10.76 Gs, respectively. The results of the occupant risk, as determined from the accelerometer data, are summarized in Figure 14. Results are shown graphically in Appendix D. The results from the rate transducer are shown graphically in Appendix D.

**5.6 Discussion**

The analysis of the test results for test no. 2214MG-2 showed that the Midwest Guardrail System impacted with the 2270P vehicle of the Update to NCHRP Report No. 350 adequately contained and redirected the vehicle with controlled lateral displacements of the barrier system. There were no detached elements nor fragments which showed potential for penetrating the occupant compartment nor presented undue hazard to other traffic. Deformations of, or intrusion into, the occupant compartment that could have caused serious injury did not occur. The test vehicle did not penetrate nor ride over the guardrail system and remained upright during and after the collision. Vehicle roll, pitch, and yaw angular displacements were noted, but they were deemed acceptable because they did not adversely influence occupant risk safety criteria nor cause rollover. After collision, the vehicle's trajectory revealed minimum intrusion into adjacent traffic lanes. In addition, the vehicle exited the barrier within the exit box.. Therefore, test no. 2214MG-2 conducted on the Midwest Guardrail System was determined to be acceptable according to the TL-3 safety performance criteria found in the Update to NCHRP Report No. 350.

0.000 sec 0.140 sec 0.264 sec 0.342 sec 0.458 sec

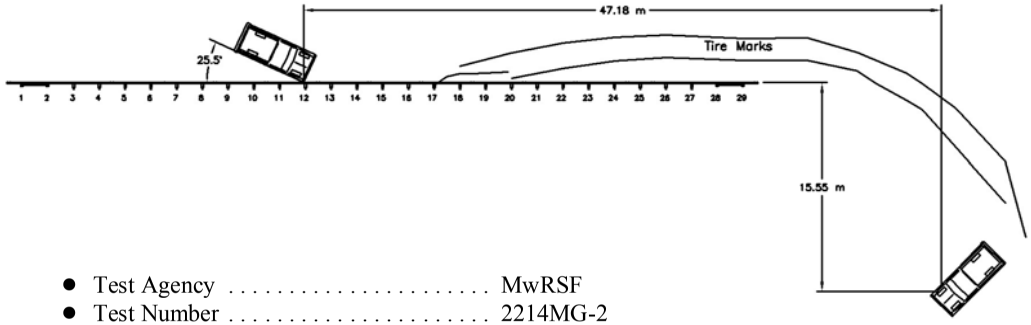


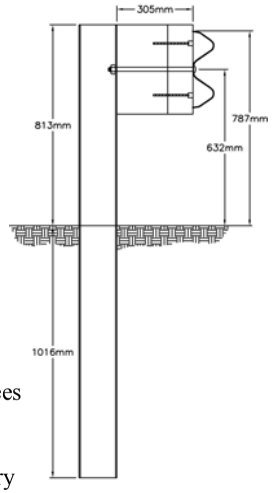


- Test Agency . . . . . MwRSF
- Test Number . . . . . 2214MG-2
- Date . . . . . 10/6/04
- NCHRP 350 Update Test Designation . . 3-11
- Appurtenance . . . . . Midwest Guardrail System
- Total Length . . . . . 55.25 m
- Key Elements - Steel W-Beam
  - Thickness . . . . . 2.66 mm
  - Top Mounting Height . . . . . 787 mm
- Key Elements - Steel Posts
  - Post Nos. 3 - 27 . . . . . W152x13.4 by 1,829 mm long
  - Spacing . . . . . 1,905 mm
- Key Elements - Wood Posts
  - Post Nos. 1 - 2, 28 - 29 (BCT) . . . . 140 mm x 190 mm by 1,080 mm long
- Key Elements - Steel Foundation Tube . 1,829 mm long
- Key Elements - Wood Spacer Blocks
  - Post Nos. 3 - 27 . . . . . 152 mm x 305 mm by 362 mm long
- Type of Soil . . . . . Grading B - AASHTO M 147-65 (1990)
- Test Vehicle
  - Type/Designation . . . . . 2270P
  - Make and Model . . . . . 2002 Dodge Ram 1500 Quad Cab Pickup
  - Curb . . . . . 2,292 kg
  - Test Inertial . . . . . 2,268 kg
  - Gross Static . . . . . 2,268 kg
- Impact Conditions
  - Speed . . . . . 101.1 km/h
  - Angle . . . . . 25.5 degrees
  - Impact Location . . . . . 5.25 m upstream splice between posts 14 & 15
- Exit Conditions
  - Speed . . . . . 63.7 km/h
  - Angle . . . . . 13.5 degrees
  - Exit Box Criterion . . . . . Pass
- Post-Impact Trajectory
  - Vehicle Stability . . . . . Satisfactory
  - Stopping Distance . . . . . 47.18 m downstream
    15.56 m laterally behind
- Occupant Impact Velocity (350 Update)
  - Longitudinal . . . . . 4.67 m/s < 12 m/s
  - Lateral . . . . . 4.76 m/s < 12 m/s
- Occupant Ridedown Deceleration (350 Update)
  - Longitudinal . . . . . 8.23 Gs < 20 Gs
  - Lateral . . . . . 6.93 Gs < 20 Gs
- THIV (not required) . . . . . 6.91 m/s
- PHD (not required) . . . . . 10.76 Gs
- Test Article Damage . . . . . Moderate
- Test Article Deflections
  - Permanent Set . . . . . 803 mm
  - Dynamic . . . . . 1,114 mm
  - Working Width . . . . . 1,234 mm
- Vehicle Damage . . . . . Moderate
  - VDS[5] . . . . . 1-RFQ-4
  - CDC[6] . . . . . 1-RYEN2
  - Maximum Deformation . . . . . 19 mm at right-center floorpan

Figure 14. Summary of Test Results and Sequential Photographs, Test 2214MG-2

0.000 sec

0.462 sec

0.096 sec

0.574 sec

0.204 sec

0.702 sec

0.284 sec

0.850 sec

Figure 15. Additional Sequential Photographs, Test 2214MG-2

0.000 sec

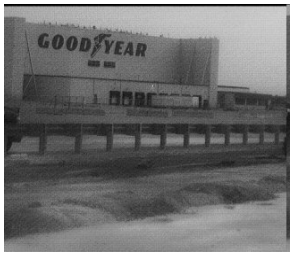


0.000 sec

0.068 sec

0.102 sec

0.196 sec

0.242 sec

0.304 sec

0.402 sec

0.428 sec

0.690 sec

Figure 16. Additional Sequential Photographs, Test 2214MG-2

0.000 sec

0.000 sec

0.120 sec

0.167 sec

0.266 sec

0.300 sec

0.524 sec

0.534 sec

0.758 sec

0.734 sec

1.450 sec

Figure 17. Additional Sequential Photographs, Test 2214MG-2

0.000 sec

2.002 sec

0.267 sec

4.004 sec

0.667 sec

5.672 sec

1.001 sec

7.341 sec

Figure 18. Additional Sequential Photographs, Test 2214MG-2

Figure 19. Documentary Photographs, Test 2214MG-2

Figure 20. Documentary Photographs, Test 2214MG-2

Figure 21. Impact Location, Test 2214MG-2

Figure 22. Vehicle Final Position and Trajectory Marks, Test 2214MG-2

Figure 23. Midwest Guardrail System Barrier Damage, Test 2214MG-2

Figure 24. Guardrail Damage Between Post Nos. 12 and 17, Test 2214MG-2

Figure 25. Post Nos. 12 through 17 Damage, Test 2214MG-2

Figure 26. Vehicle Damage, Test 2214MG-2

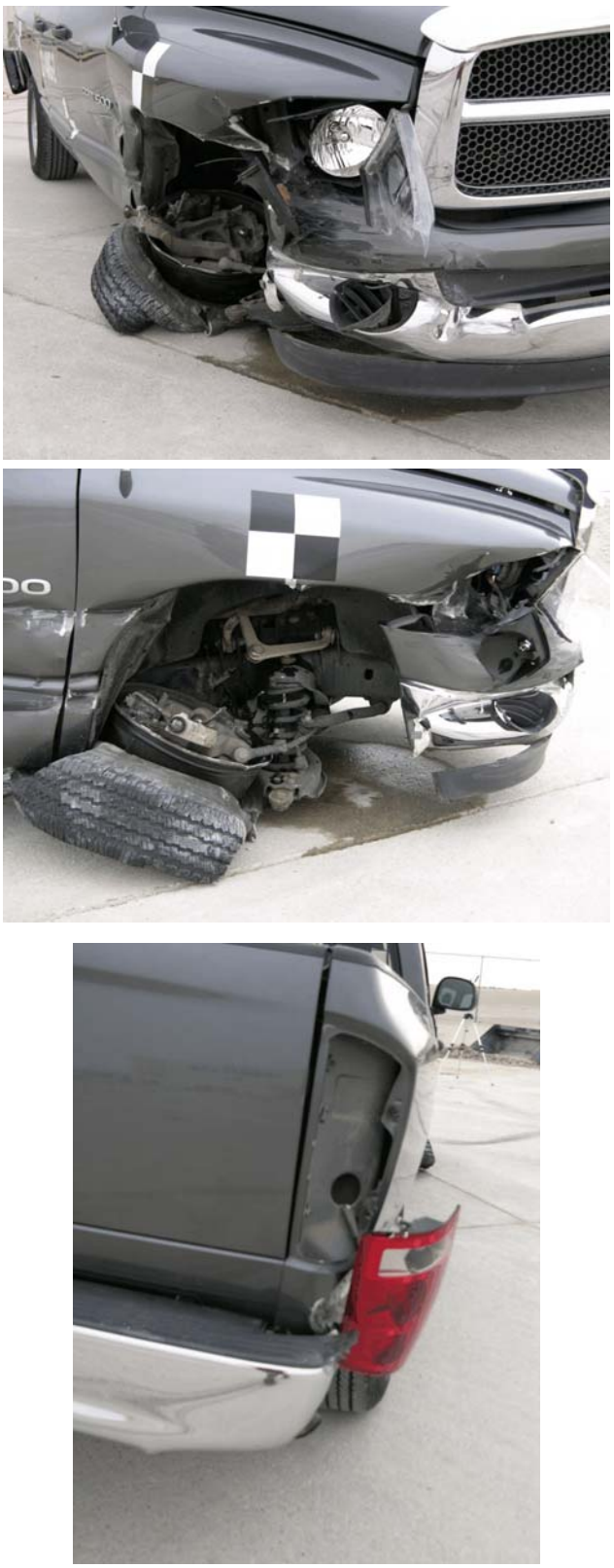

Figure 27. Vehicle Damage, Test 2214MG-2

# 6 SUMMARY AND CONCLUSIONS

A strong-post, W-beam guardrail system, the MGS system, was constructed and full-scale vehicle crash tested. One full-scale vehicle crash test, using a pickup truck vehicle, was performed on the longitudinal barrier system and was determined to be acceptable according to the TL-3 safety performance criteria presented in the Update to NCHRP Report No. 350. A summary of the safety performance evaluation is provided in Table 3.

Table 3. Summary of Safety Performance Evaluation Results

| Evaluation Factors | Evaluation Criteria | | Test 2214MG-2 |
|---|---|---|---|
| Structural Adequacy | A. | Test article should contain and redirect the vehicle or bring the vehicle to a controlled stop; the vehicle should not penetrate, underride, or override the installation although controlled lateral deflection of the test article is acceptable. | S |
| Occupant Risk | D. | Detached elements, fragments or other debris from the test article should not penetrate or show potential for penetrating the occupant compartment, or present an undue hazard to other traffic, pedestrians, or personnel in a work zone. Deformations of, or intrusions into, the occupant compartment should not exceed limits set forth in Section 5.3 and Appendix E of the Update to NCHRP Report No. 350. | S |
| | F. | The vehicle should remain upright during and after collision. | S |
| | H. | Longitudinal and lateral occupant impact velocities should fall below the preferred value of 9.0 m/s (29.5 ft/s), or at least below the maximum allowable value of 12.0 m/s (39.4 ft/s). | S |
| | I. | Longitudinal and lateral occupant ridedown accelerations should fall below the preferred value of 15 Gs, or at least below the maximum allowable value of 20.0 Gs. | S |
| Vehicle Trajectory | M. | After impact, the vehicle shall exit the barrier within the exit box. | S |

S - Satisfactory
U - Unsatisfactory
NA - Not Available

# 7 REFERENCES


1. Ross, H.E., Sicking, D.L., Zimmer, R.A., and Michie, J.D., *Recommended Procedures for the Safety Performance Evaluation of Highway Features*, National Cooperative Research Program (NCHRP) Report No. 350, Transportation Research Board, Washington, D.C., 1993.

2. Sicking, D.L., Mak, K.K., and Rohde, J.R., *NCHRP Report No. 350 Update - Chapters 1 through 7, Draft Report*, Presented to the Transportation Research Board, Prepared by the Midwest Roadside Safety Facility, University of Nebraska-Lincoln, July 2005 [Privileged Document].

3. Hinch, J., Yang, T.L., and Owings, R., *Guidance Systems for Vehicle Testing*, ENSCO, Inc., Springfield, VA, 1986.

4. *Center of Gravity Test Code - SAE J874 March 1981*, SAE Handbook Vol. 4, Society of Automotive Engineers, Inc., Warrendale, Pennsylvania, 1986.

5. *Vehicle Damage Scale for Traffic Investigators*, Second Edition, Technical Bulletin No. 1, Traffic Accident Data (TAD) Project, National Safety Council, Chicago, Illinois, 1971.

6. *Collision Deformation Classification - Recommended Practice J224 March 1980*, Handbook Volume 4, Society of Automotive Engineers (SAE), Warrendale, Pennsylvania, 1985.

# 8 APPENDICES

# APPENDIX A

## English-Unit System Drawings

Figure A-1. Layout of Midwest Guardrail System Design (English)

Figure A-2. Midwest Guardrail System Rail Details (English)

Figure A-3. Midwest Guardrail System Post Details (English)

Figure A-4. Midwest Guardrail System Anchorage Details (English)

Figure A-5. Midwest Guardrail System Anchorage Details (English)

Figure A-6. Midwest Guardrail System Anchorage Details (English)

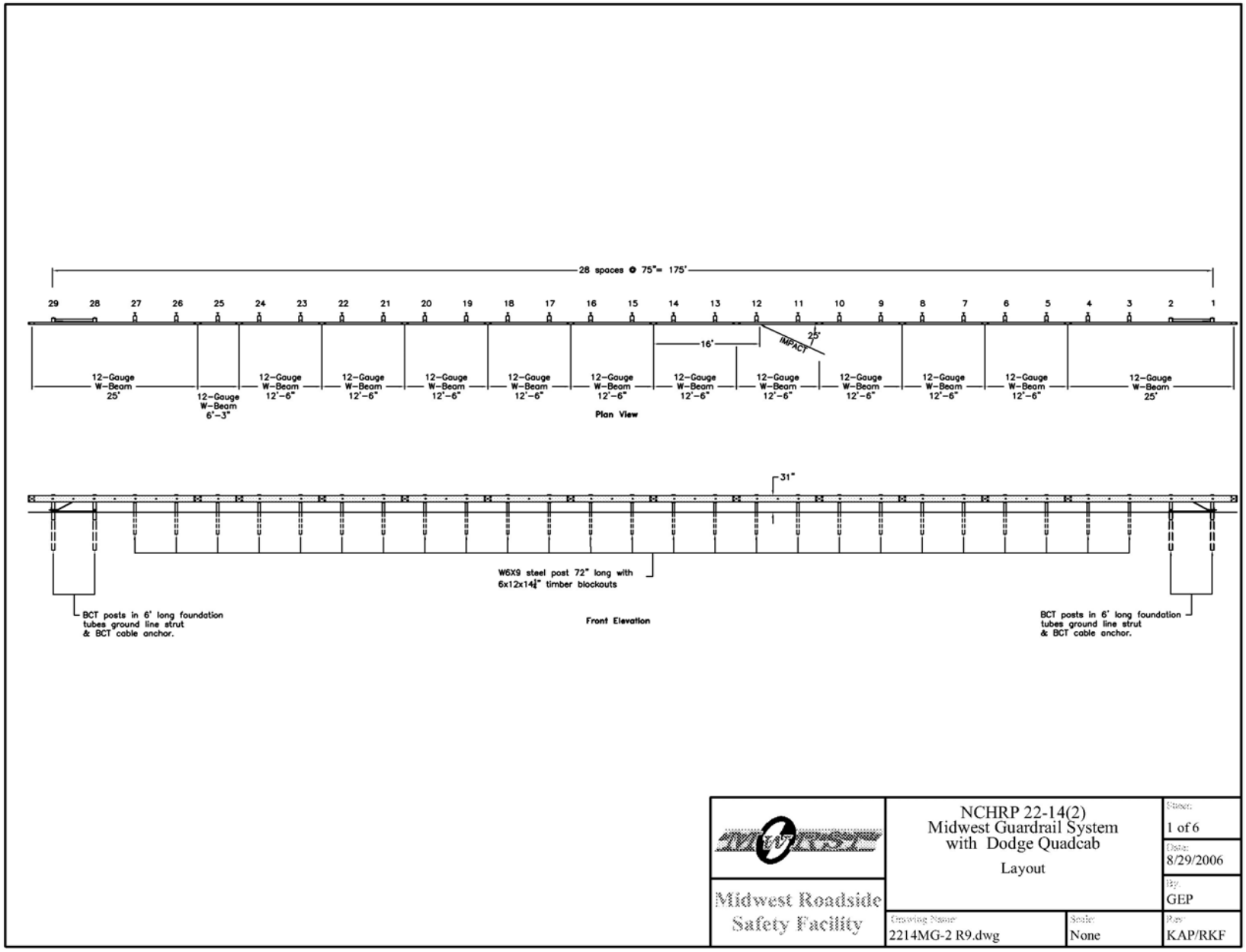


Figure A-1. Layout of Midwest Guardrail System Design (English)

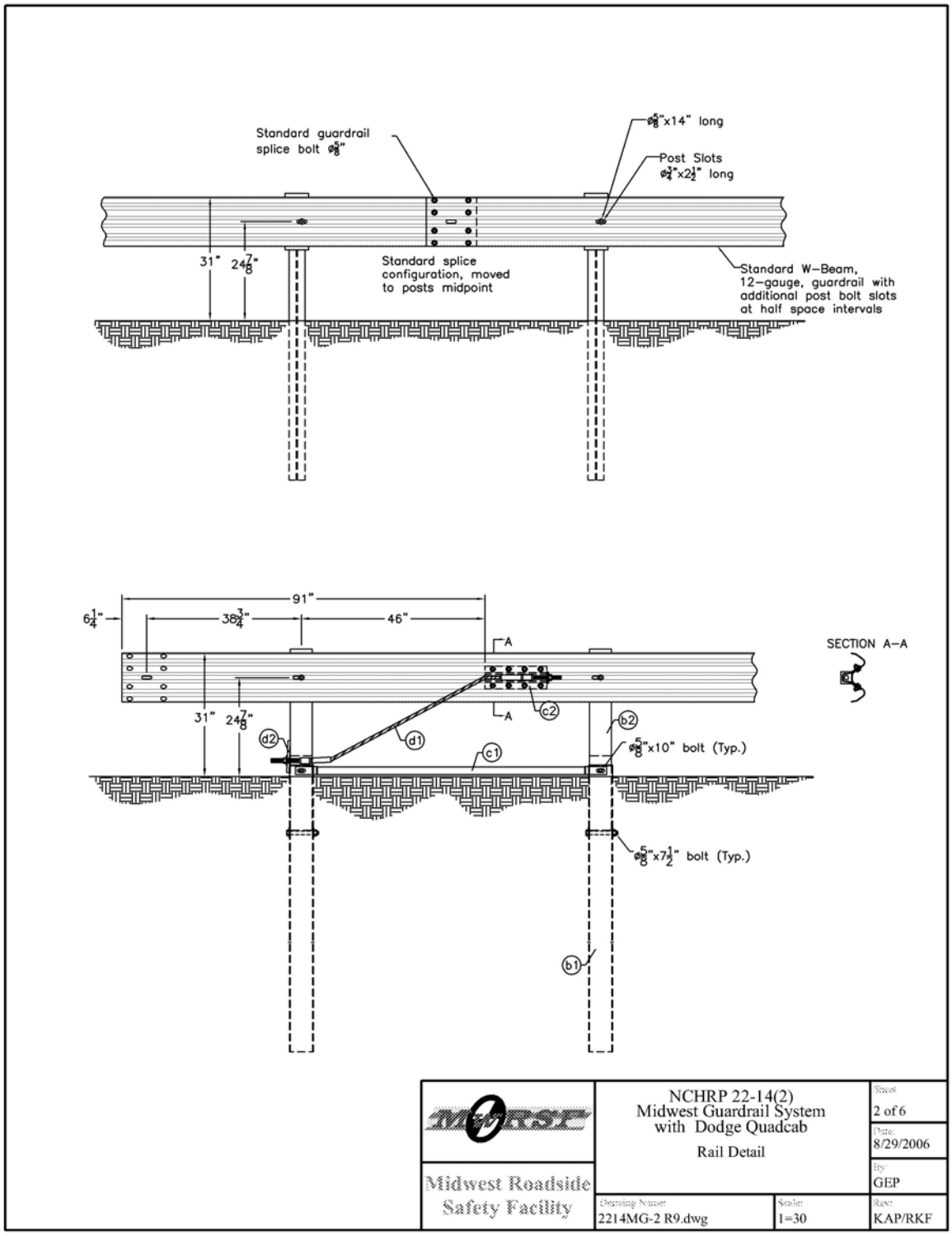


Figure A-2. Midwest Guardrail System Rail Details (English)

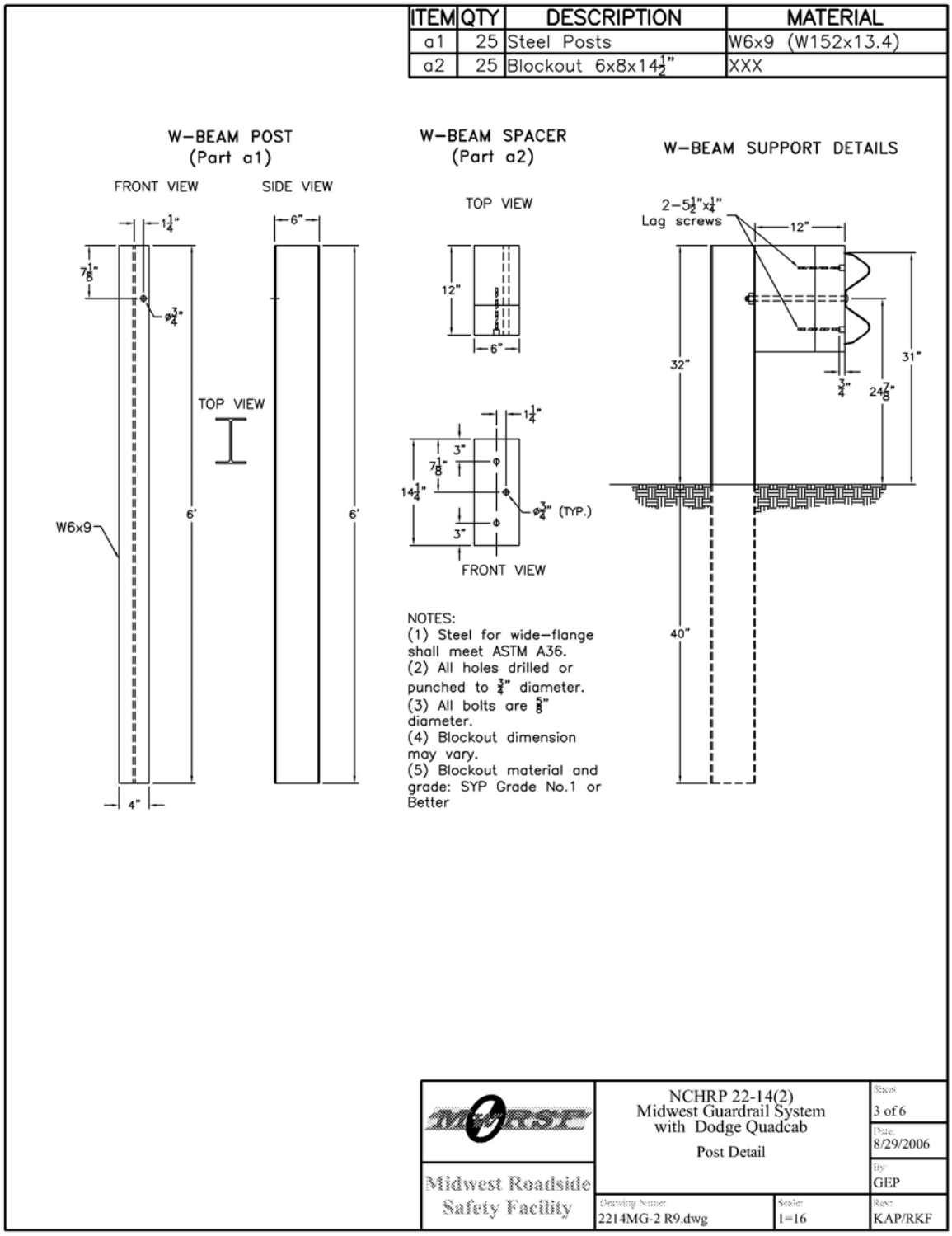


Figure A-3. Midwest Guardrail System Post Details (English)

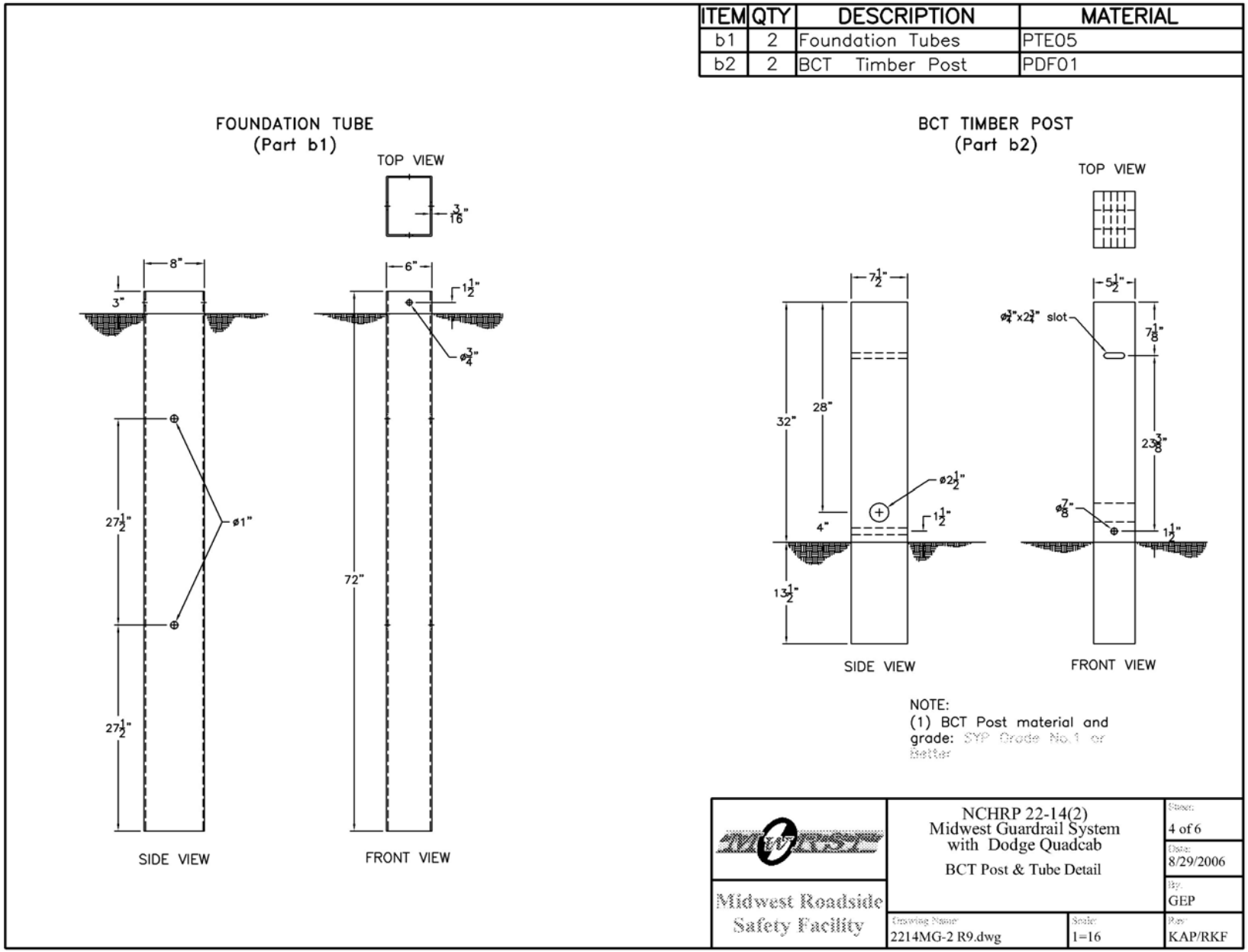


Figure A-4. Midwest Guardrail System Anchorage Details (English)

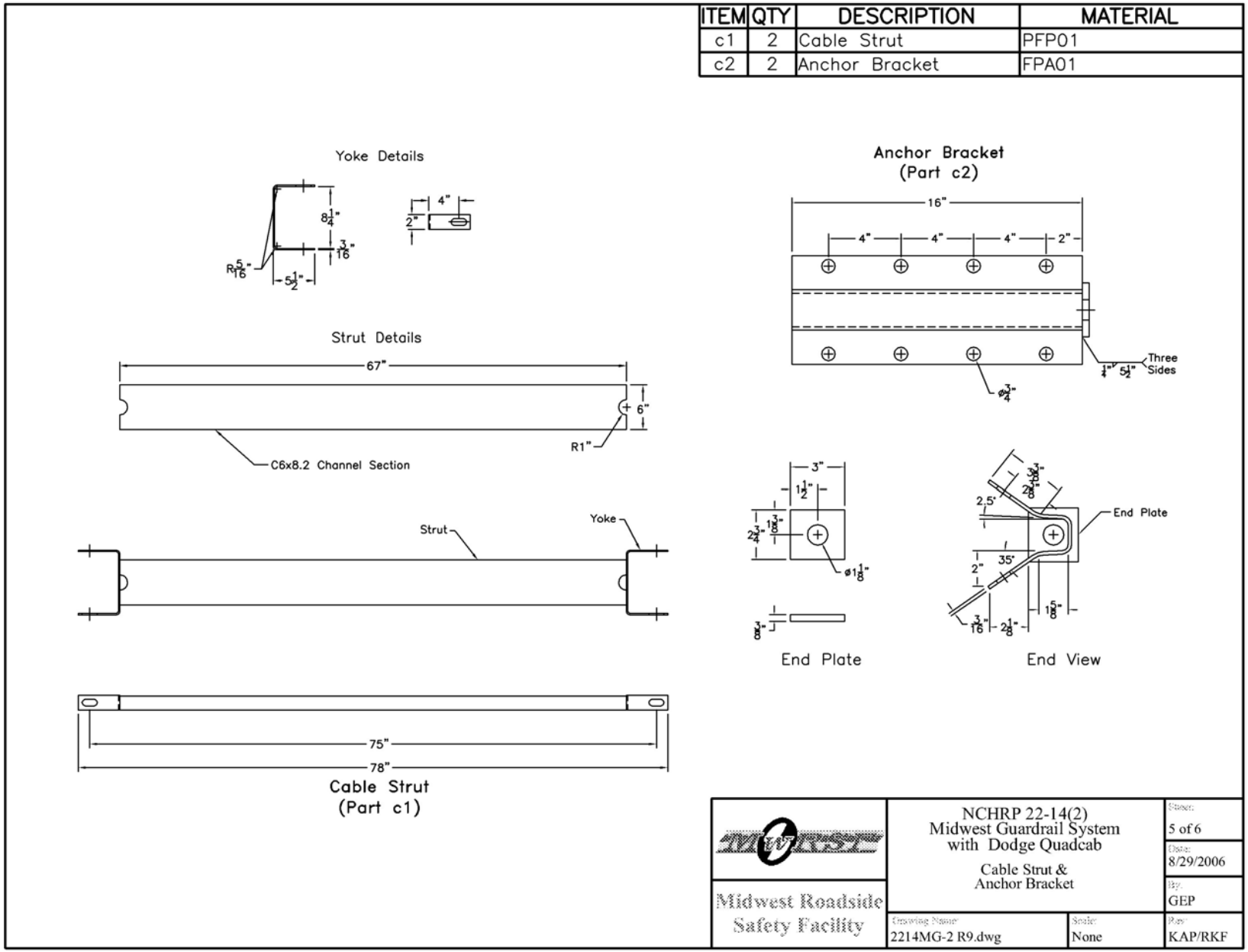


Figure A-5. Midwest Guardrail System Anchorage Details (English)

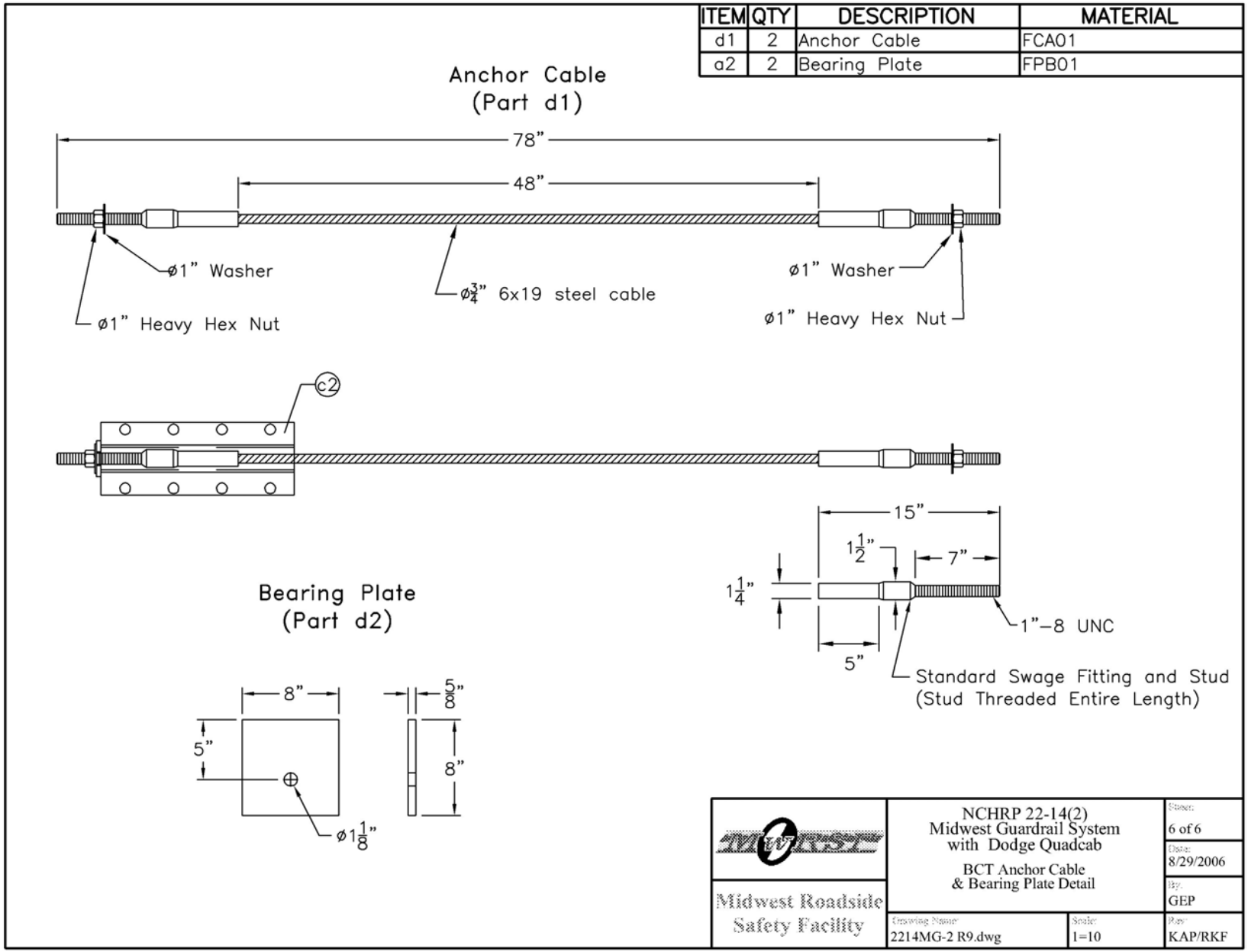


Figure A-6. Midwest Guardrail System Anchorage Details (English)

# APPENDIX B

## Test Summary Sheet in English Units

Figure B-1. Summary of Test Results and Sequential Photographs (English), Test 2214MG-2

0.000 sec | 0.140 sec | 0.264 sec | 0.342 sec | 0.458 sec

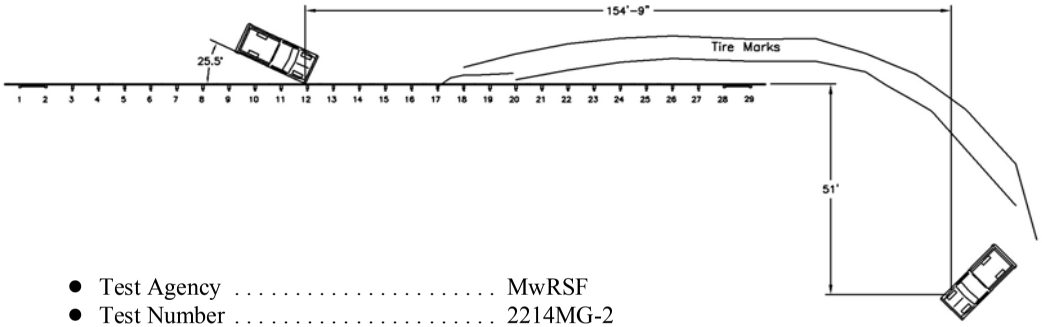


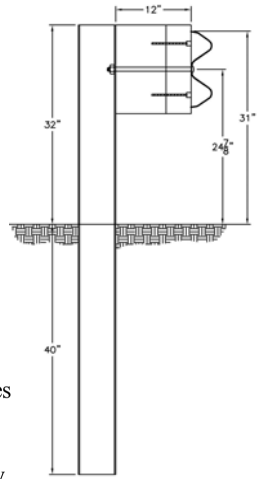


- Test Agency . . . . . MwRSF
- Test Number . . . . . 2214MG-2
- Date . . . . . 10/6/04
- NCHRP 350 Update Test Designation . . 3-11
- Appurtenance . . . . . Midwest Guardrail System
- Total Length . . . . . 181 ft - 3 in.
- Key Elements - Steel W-Beam
  - Thickness . . . . . 12 gauge
  - Top Mounting Height . . . . . 31 in.
- Key Elements - Steel Posts
  - Post Nos. 3 - 27 . . . . . W6x9 by 6 ft long
  - Spacing . . . . . 75 in.
- Key Elements - Wood Posts
  - Post Nos. 1 - 2, 28 - 29 (BCT) . . . . 5.5 in. x 7.5 in. by 42.5 in. long
- Key Elements - Steel Foundation Tube . 6-ft long
- Key Elements - Wood Spacer Blocks
  - Post Nos. 3 - 27 . . . . . 6 in. x 12 in. by 14.25 in. long
- Type of Soil . . . . . Grading B - AASHTO M 147-65 (1990)
- Test Vehicle
  - Type/Designation . . . . . 2270P
  - Make and Model . . . . . 2002 Dodge Ram 1500 Quad Cab Pickup
  - Curb . . . . . 5,052 lbs
  - Test Inertial . . . . . 5,000 lbs
  - Gross Static . . . . . 5,000 lbs
- Impact Conditions
  - Speed . . . . . 62.8 mph
  - Angle . . . . . 25.5 degrees
  - Impact Location . . . . . 17 ft - 2.5 in. upstream splice btwn posts 14 & 15
- Exit Conditions
  - Speed . . . . . 39.6 mph
  - Angle . . . . . 13.5 degrees
  - Exit Box Criterion . . . . . Pass
- Post-Impact Trajectory
  - Vehicle Stability . . . . . Satisfactory
  - Stopping Distance . . . . . 154 ft - 9.5 in. downstream
    51 ft laterally behind
- Occupant Impact Velocity (350 Update)
  - Longitudinal . . . . . 15.32 ft/s < 39.4 ft/s
  - Lateral . . . . . 15.62 ft/s < 39.4 ft/s
- Occupant Ridedown Deceleration (350 Update)
  - Longitudinal . . . . . 8.23 Gs < 20 Gs
  - Lateral . . . . . 6.93 Gs < 20 Gs
- THIV (not required) . . . . . 22.67 ft/s
- PHD (not required) . . . . . 10.76 Gs
- Test Article Damage . . . . . Moderate
- Test Article Deflections
  - Permanent Set . . . . . 31.625 in.
  - Dynamic . . . . . 43.9 in.
  - Working Width . . . . . 48.6 in.
- Vehicle Damage . . . . . Moderate
  - VDS[5] . . . . . 1-RFQ-4
  - CDC[6] . . . . . 1-RYEN2
  - Maximum Deformation . . . . . 0.75 in. at right-center floorpan

Figure B-1. Summary of Test Results and Sequential Photographs (English), Test 2214MG-2

# APPENDIX C

## Occupant Compartment Deformation Data, Test 2214MG-2

Figure C-1. Occupant Compartment Deformation Data - Set 1, Test 2214MG-2

Figure C-2. Occupant Compartment Deformation Data - Set 2, Test 2214MG-2

Figure C-3. Occupant Compartment Deformation Index (OCDI), Test 2214MG-2

Figure C-4. NASS Crush Data, Test 2214MG-2

VEHICLE PRE/POST CRUSH INFO
Set-1

TEST: 2214MG-2
VEHICLE: 2002/Dodge/Ram1500/QuadCab

Note: If impact is on driver side need to enter negative number for Y

| POINT | X | Y | Z | X' | Y' | Z' | DEL X | DEL Y | DEL Z |
|---|---|---|---|---|---|---|---|---|---|
| 1 | 45.75 | 11 | 0 | 46 | 11 | -0.25 | 0.25 | 0 | -0.25 |
| 2 | 48 | 15.25 | -1.75 | 48 | 15 | -1.5 | 0 | -0.25 | 0.25 |
| 3 | 50.75 | 20.25 | -4.75 | 51 | 20.25 | -4.5 | 0.25 | 0 | 0.25 |
| 4 | 50.5 | 26 | -3.75 | 50.75 | 26 | -3.5 | 0.25 | 0 | 0.25 |
| 5 | 49.5 | 29.75 | -2.75 | 49.5 | 29.5 | -2.5 | 0 | -0.25 | 0.25 |
| 6 | 40.25 | 9.5 | -3 | 40.25 | 9.75 | -2.75 | 0 | 0.25 | 0.25 |
| 7 | 41.5 | 14.25 | -6 | 41.5 | 14.25 | -5.75 | 0 | 0 | 0.25 |
| 8 | 42.25 | 19.5 | -9 | 42.75 | 19.25 | -8.5 | 0.5 | -0.25 | 0.5 |
| 9 | 42.25 | 25.25 | -8.75 | 42.25 | 25 | -8.5 | 0 | -0.25 | 0.25 |
| 10 | 42.25 | 30.75 | -8.75 | 42.5 | 30.75 | -8.25 | 0.25 | 0 | 0.5 |
| 11 | 33.25 | 7.5 | -3 | 33.5 | 7.5 | -2.5 | 0.25 | 0 | 0.5 |
| 12 | 35.75 | 13.5 | -9.5 | 36 | 13.5 | -9 | 0.25 | 0 | 0.5 |
| 13 | 35.5 | 19.25 | -9.25 | 35.75 | 19.25 | -8.75 | 0.25 | 0 | 0.5 |
| 14 | 35 | 25.25 | -9 | 35.5 | 25.25 | -8.5 | 0.5 | 0 | 0.5 |
| 15 | 35.5 | 30.5 | -8.75 | 35.75 | 30.5 | -8.5 | 0.25 | 0 | 0.25 |
| 16 | 29 | 7.5 | -3.25 | 29 | 7.5 | -3 | 0 | 0 | 0.25 |
| 17 | 30.5 | 13.25 | -9.25 | 30.75 | 13 | -9 | 0.25 | -0.25 | 0.25 |
| 18 | 30.5 | 20 | -9 | 31 | 20 | -8.75 | 0.5 | 0 | 0.25 |
| 19 | 30.25 | 25.75 | -8.75 | 31 | 25.75 | -8.5 | 0.75 | 0 | 0.25 |
| 20 | 30.75 | 30.5 | -8.5 | 31 | 30.25 | -8.25 | 0.25 | -0.25 | 0.25 |
| 21 | 25.5 | 7 | -3.5 | 25.5 | 7.25 | -3.25 | 0 | 0.25 | 0.25 |
| 22 | 25.5 | 13.5 | -8.5 | 25.75 | 13.25 | -8.25 | 0.25 | -0.25 | 0.25 |
| 23 | 25.75 | 19.75 | -8 | 26 | 20 | -7.75 | 0.25 | 0.25 | 0.25 |
| 24 | 25.75 | 25.5 | -7.75 | 26.25 | 25.5 | -7.5 | 0.5 | 0 | 0.25 |
| 25 | 25.75 | 30 | -7.25 | 26 | 29.75 | -7 | 0.25 | -0.25 | 0.25 |
| 26 | 17.25 | 13 | -8.25 | 17.25 | 12.75 | -8 | 0 | -0.25 | 0.25 |
| 27 | 16.75 | 19.75 | -7.5 | 17.25 | 20 | -7.5 | 0.5 | 0.25 | 0 |
| 28 | 16.75 | 29.25 | -7.5 | 17 | 29.25 | -7.5 | 0.25 | 0 | 0 |
| 29 | | | | | | | | | |
| 30 | | | | | | | | | |

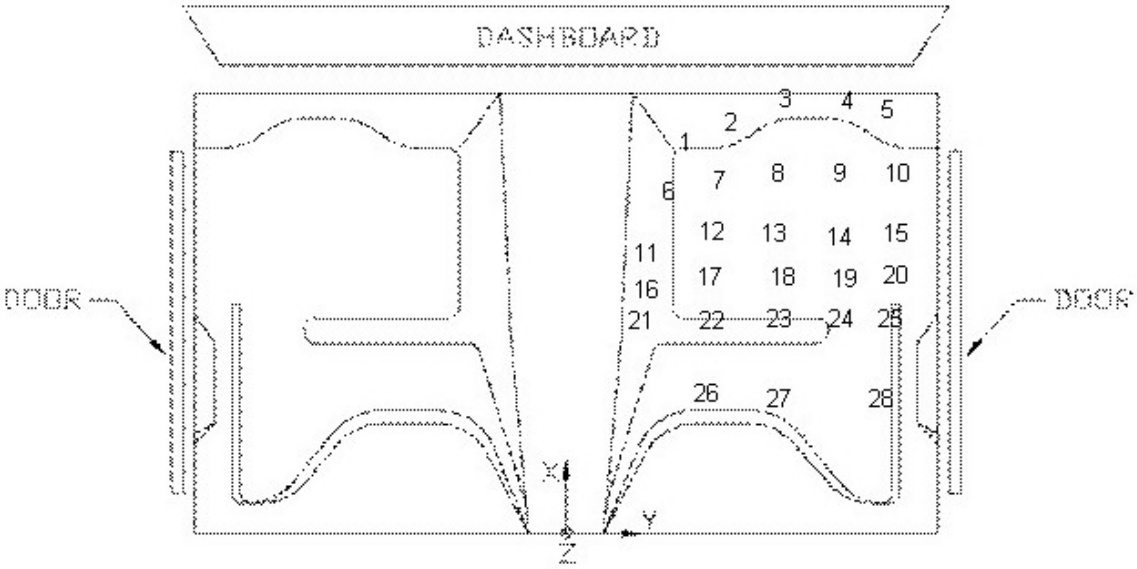


Figure C-1. Occupant Compartment Deformation Data - Set 1, Test 2214MG-2

VEHICLE PRE/POST CRUSH INFO
Set-2

TEST: 2214MG-2
VEHICLE: 2002/Dodge/Ram1500/QuadCab

Note: If impact is on driver side need to enter negative number for Y

| POINT | X | Y | Z | X' | Y' | Z' | DEL X | DEL Y | DEL Z |
|---|---|---|---|---|---|---|---|---|---|
| 1 | 39.75 | 14.25 | 0.5 | 40.25 | 14 | 0.5 | 0.5 | -0.25 | 0 |
| 2 | 42 | 18.5 | -2.5 | 42.25 | 18 | -2 | 0.25 | -0.5 | 0.5 |
| 3 | 44.75 | 23.5 | -5.5 | 45 | 23.25 | -5.25 | 0.25 | -0.25 | 0.25 |
| 4 | 44.5 | 29.25 | -5 | 44.5 | 29 | -4.5 | 0 | -0.25 | 0.5 |
| 5 | 43.5 | 33 | -4 | 43.5 | 32.5 | -3.5 | 0 | -0.5 | 0.5 |
| 6 | 34.25 | 12.75 | -3.25 | 34.5 | 12.75 | -3 | 0.25 | 0 | 0.25 |
| 7 | 35.5 | 17.5 | -6.5 | 35.5 | 17.25 | -6 | 0 | -0.25 | 0.5 |
| 8 | 36.25 | 22.75 | -9.5 | 36.25 | 22.25 | -9.25 | 0 | -0.5 | 0.25 |
| 9 | 36.25 | 28.5 | -9.5 | 36 | 28.25 | -9.25 | -0.25 | -0.25 | 0.25 |
| 10 | 36.25 | 34 | -9.5 | 36.5 | 33.75 | -9.25 | 0.25 | -0.25 | 0.25 |
| 11 | 27.25 | 10.75 | -3 | 27.5 | 10.5 | -2.75 | 0.25 | -0.25 | 0.25 |
| 12 | 29.75 | 16.75 | -9.75 | 29.25 | 16.5 | -9.5 | -0.5 | -0.25 | 0.25 |
| 13 | 29.5 | 22.5 | -9.5 | 29.5 | 22.25 | -9.25 | 0 | -0.25 | 0.25 |
| 14 | 29 | 28.5 | -9.5 | 29.25 | 28.25 | -9.25 | 0.25 | -0.25 | 0.25 |
| 15 | 29.5 | 33.75 | -9.75 | 30 | 33.5 | -9.25 | 0.5 | -0.25 | 0.5 |
| 16 | 23 | 10.75 | -3.5 | 23 | 10.75 | -3.25 | 0 | 0 | 0.25 |
| 17 | 24.5 | 16.5 | -9.5 | 24.25 | 16 | -9.25 | -0.25 | -0.5 | 0.25 |
| 18 | 24.5 | 23.25 | -9.5 | 24.5 | 23 | -9 | 0 | -0.25 | 0.5 |
| 19 | 24.25 | 29 | -9.25 | 24.5 | 28.75 | -9 | 0.25 | -0.25 | 0.25 |
| 20 | 24.75 | 33.75 | -9.25 | 24.75 | 33.25 | -8.75 | 0 | -0.5 | 0.5 |
| 21 | 19.5 | 10.25 | -3.5 | 19.5 | 10 | -3.5 | 0 | -0.25 | 0 |
| 22 | 19.5 | 16.75 | -9.5 | 19.25 | 16.25 | -9.25 | -0.25 | -0.5 | 0.25 |
| 23 | 19.75 | 23 | -8.25 | 20 | 23 | -8 | 0.25 | 0 | 0.25 |
| 24 | 19.75 | 28.75 | -8.25 | 19.75 | 28.5 | -8 | 0 | -0.25 | 0.25 |
| 25 | 19.75 | 33.25 | -8 | 20 | 32.75 | -7.5 | 0.25 | -0.5 | 0.5 |
| 26 | 11.25 | 16.25 | -8 | 11 | 15.75 | -7.75 | -0.25 | -0.5 | 0.25 |
| 27 | 10.75 | 23 | -7.5 | 11 | 23 | -7.5 | 0.25 | 0 | 0 |
| 28 | 10.75 | 32.5 | -8 | 11 | 32.25 | -7.5 | 0.25 | -0.25 | 0.5 |
| 29 | | | | | | | | | |
| 30 | | | | | | | | | |

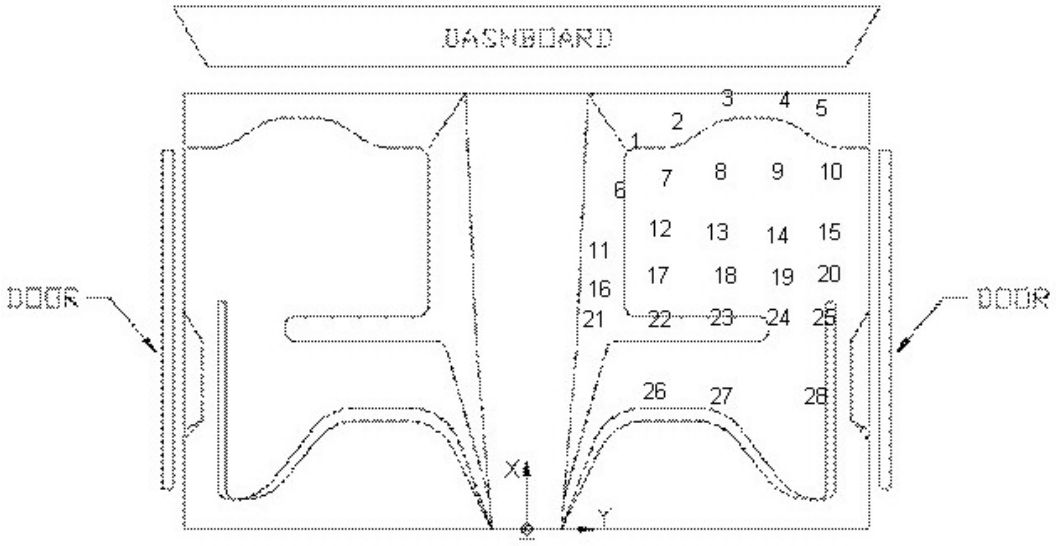


Figure C-2. Occupant Compartment Deformation Data - Set 2, Test 2214MG-2

**Occupant Compartment Deformation Index (OCDI)**

**Test No.** 2214MG-2
**Vehicle Type:** 2270P

**OCDI = XXABCDEFGHI**

XX = location of occupant compartment deformation

A = distance between the dashboard and a reference point at the rear of the occupant compartment, such as the top of the rear seat or the rear of the cab on a pickup

B = distance between the roof and the floor panel

C = distance between a reference point at the rear of the occupant compartment and the motor panel

D = distance between the lower dashboard and the floor panel

E = interior width

F = distance between the lower edge of right window and the upper edge of left window

G = distance between the lower edge of left window and the upper edge of right window

H= distance between bottom front corner and top rear corner of the passenger side window

I= distance between bottom front corner and top rear corner of the driver side window

**Severity Indices**

0 - if the reduction is less than 3%
1 - if the reduction is greater than 3% and less than or equal to 10 %
2 - if the reduction is greater than 10% and less than or equal to 20 %
3 - if the reduction is greater than 20% and less than or equal to 30 %
4 - if the reduction is greater than 30% and less than or equal to 40 %

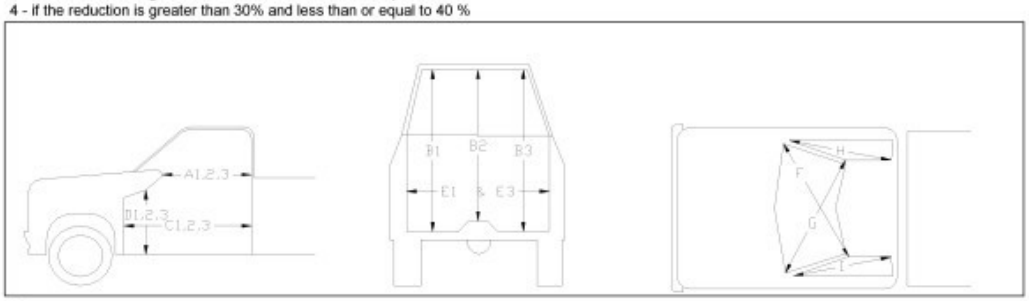


where,
1 = Passenger Side
2 = Middle
3 = Driver Side

**Location:**

| Measurement | Pre-Test (in.) | Post-Test (in.) | Change (in.) | % Difference | Severity Index |
|---|---|---|---|---|---|
| A1 | 68.75 | 68.75 | 0.00 | 0.00 | 0 |
| A2 | 69.75 | 69.75 | 0.00 | 0.00 | 0 |
| A3 | 71.00 | 71.00 | 0.00 | 0.00 | 0 |
| B1 | 47.00 | 47.00 | 0.00 | 0.00 | 0 |
| B2 | 42.25 | 42.25 | 0.00 | 0.00 | 0 |
| B3 | 46.50 | 46.50 | 0.00 | 0.00 | 0 |
| C1 | 66.50 | 66.50 | 0.00 | 0.00 | 0 |
| C2 | 46.50 | 46.50 | 0.00 | 0.00 | 0 |
| C3 | 62.75 | 63.00 | 0.25 | 0.40 | 0 |
| D1 | 15.50 | 15.50 | 0.00 | 0.00 | 0 |
| D2 | 13.25 | 13.25 | 0.00 | 0.00 | 0 |
| D3 | 16.25 | 16.25 | 0.00 | 0.00 | 0 |
| E1 | 65.75 | 66.00 | 0.25 | 0.38 | 0 |
| E3 | 64.75 | 64.75 | 0.00 | 0.00 | 0 |
| F | 56.75 | 56.75 | 0.00 | 0.00 | 0 |
| G | 57.00 | 57.00 | 0.00 | 0.00 | 0 |
| H | 37.25 | 37.00 | -0.25 | -0.67 | 0 |
| I | 38.75 | 38.75 | 0.00 | 0.00 | 0 |

**Note: Maximum sevrity index for each variable (A-I) is used for determination of final OCDI value**

| | XX | A | B | C | D | E | F | G | H | I |
|---|---|---|---|---|---|---|---|---|---|---|
| **Final OCDI:** | RF | 0 | 0 | 0 | 0 | 0 | 0 | 0 | 0 | 0 |

Figure C-3. Occupant Compartment Deformation Index (OCDI), Test 2214MG-2

Date: 10/6/04 Test Number: 2214MG-2 Model: 1500 Quad Cab

Make: Dodge Ram Vehicle I.D.#: 1D7HA18N02S571166

Tire Size: P265/70 R17 Year: 2002 Odometer: 64749

*(All Measurements Refer to Impacting Side)

Vehicle Geometry -- mm (in.)

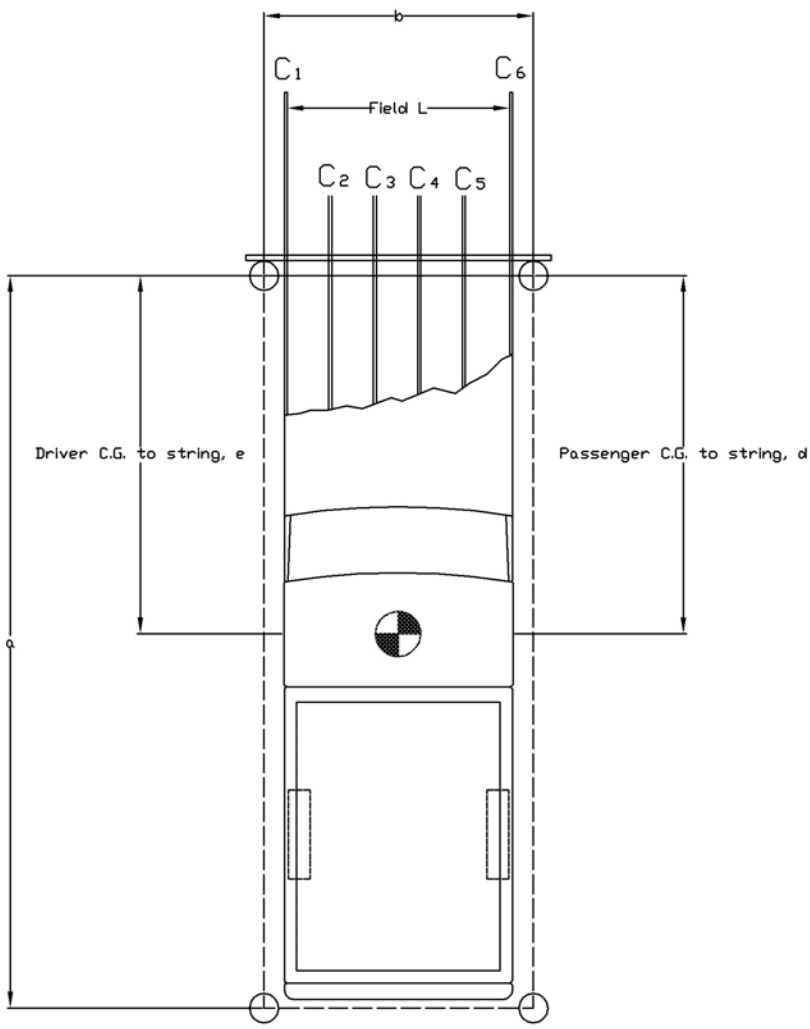


a

b

Field L 1753 (69)

Bumper Height 559 (22)

d 2743 (108)

e 2743 (108)

C1 445 (17.5)

C2 208 (8.1875)

C3 156 (6.125)

C4 156 (6.125)

C5 229 (9)

C6 610 (24)

Figure C-4. NASS Crush Data, Test 2214MG-2

## APPENDIX D

### Accelerometer and Rate Transducer Data Analysis, Test 2214MG-2

Figure D-1. Graph of Longitudinal Deceleration, Test 2214MG-2

Figure D-2. Graph of Longitudinal Occupant Impact Velocity, Test 2214MG-2

Figure D-3. Graph of Longitudinal Occupant Displacement, Test 2214MG-2

Figure D-4. Graph of Lateral Deceleration, Test 2214MG-2

Figure D-5. Graph of Lateral Occupant Impact Velocity, Test 2214MG-2

Figure D-6. Graph of Lateral Occupant Displacement, Test 2214MG-2

Figure D-7. Graph of Roll, Pitch, and Yaw Angular Displacements, Test 2214MG-2

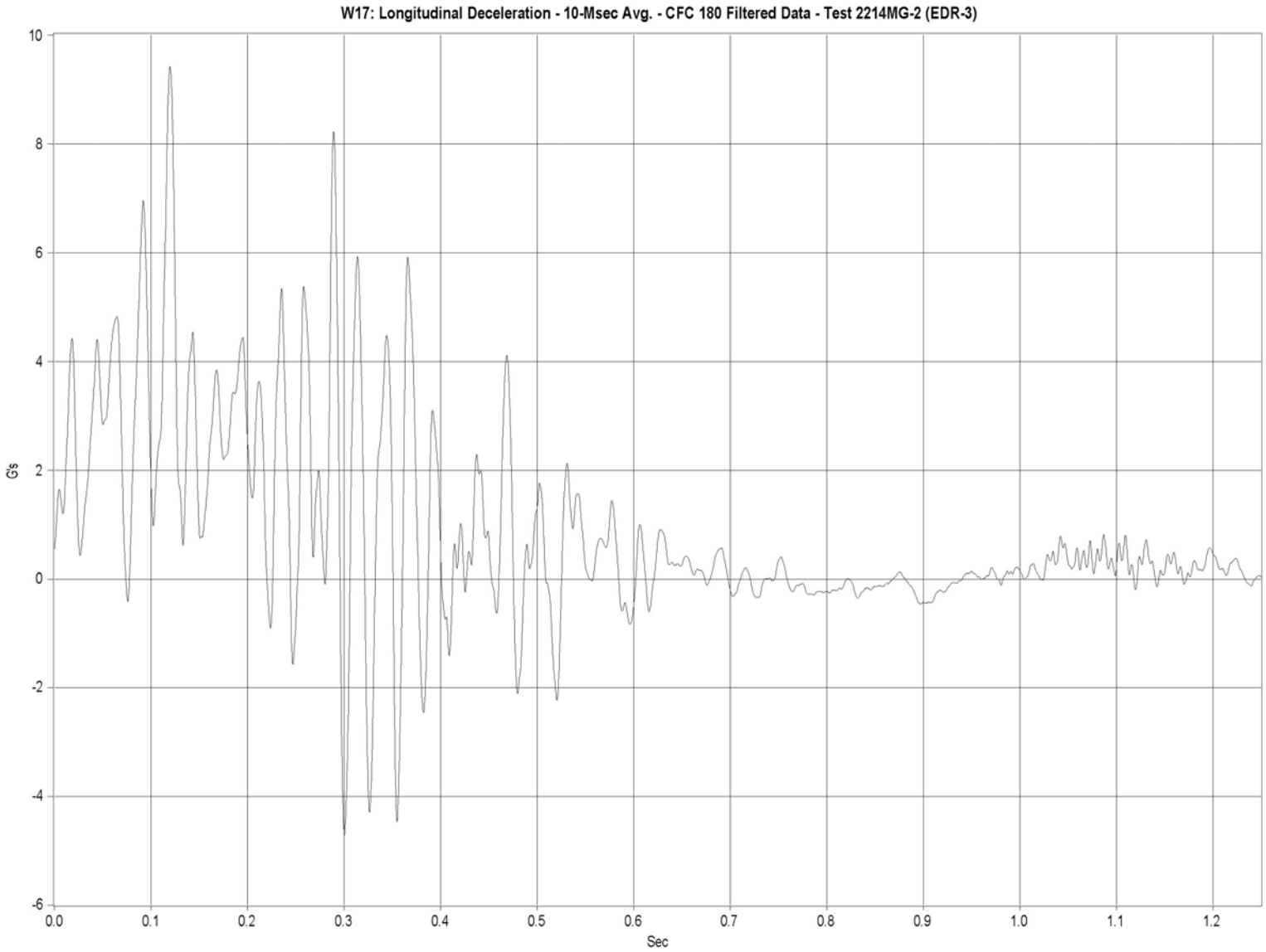


Figure D-1. Graph of Longitudinal Deceleration, Test 2214MG-2

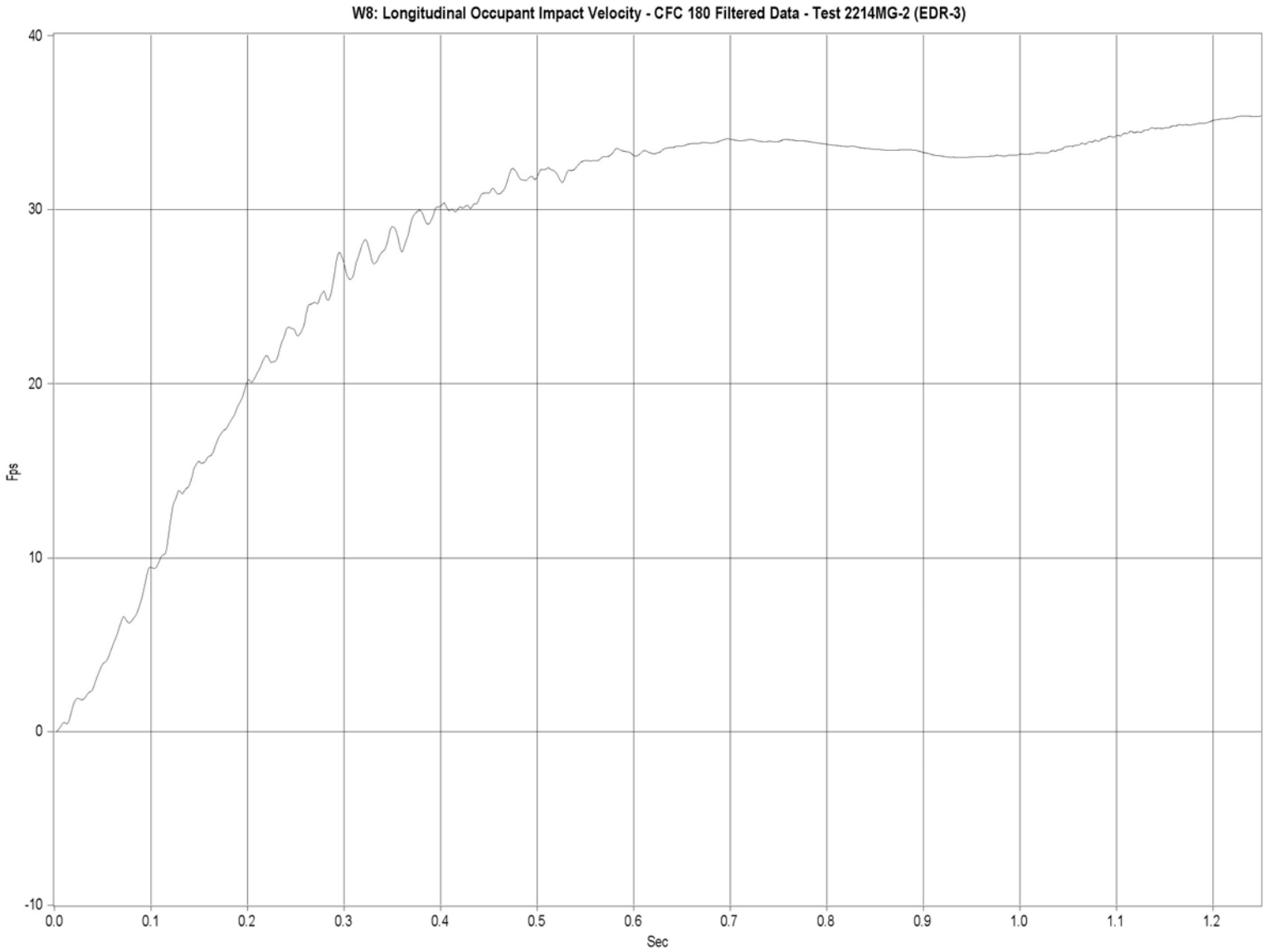


Figure D-2. Graph of Longitudinal Occupant Impact Velocity, Test 2214MG-2

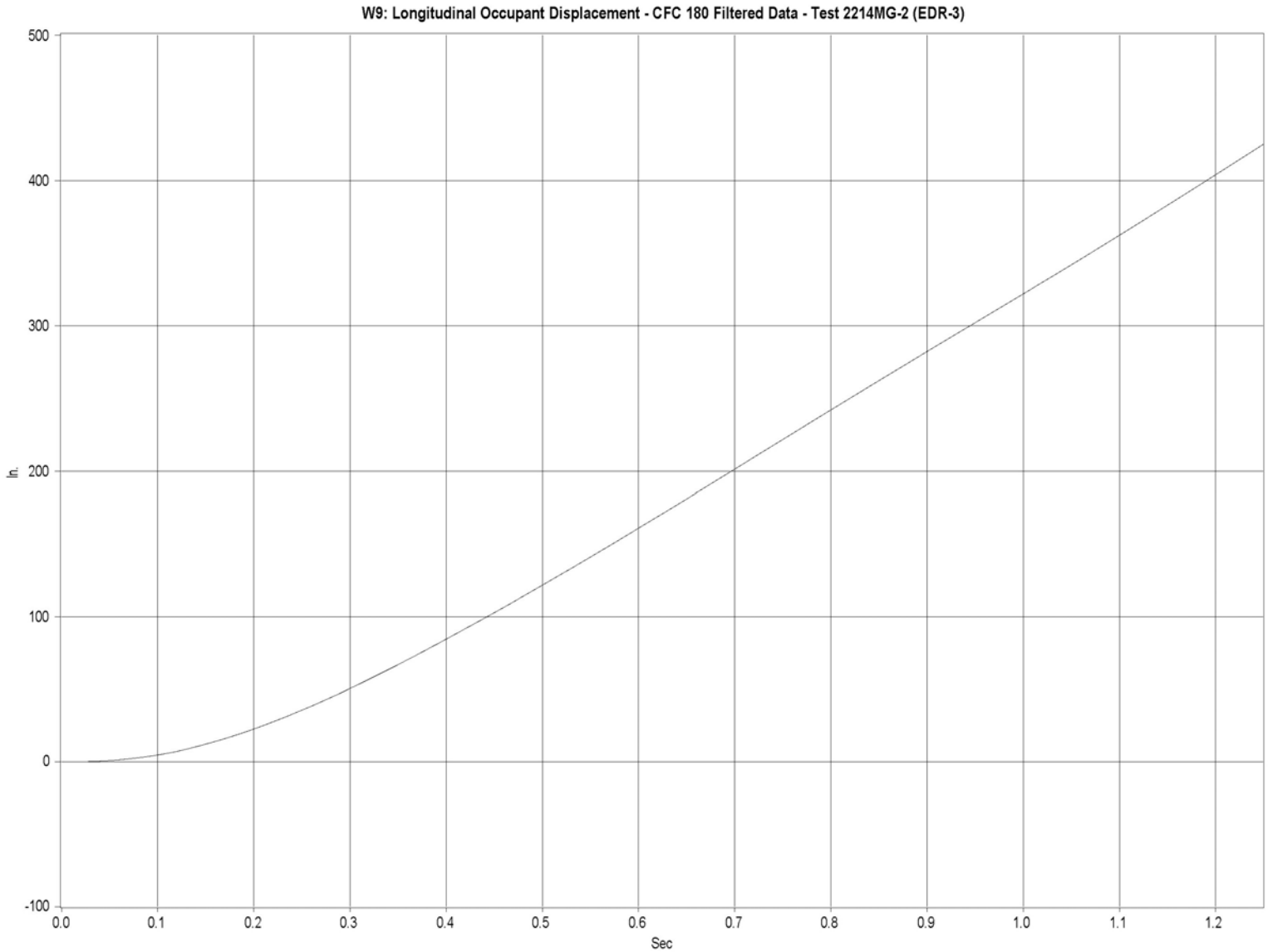


Figure D-3. Graph of Longitudinal Occupant Displacement, Test 2214MG-2

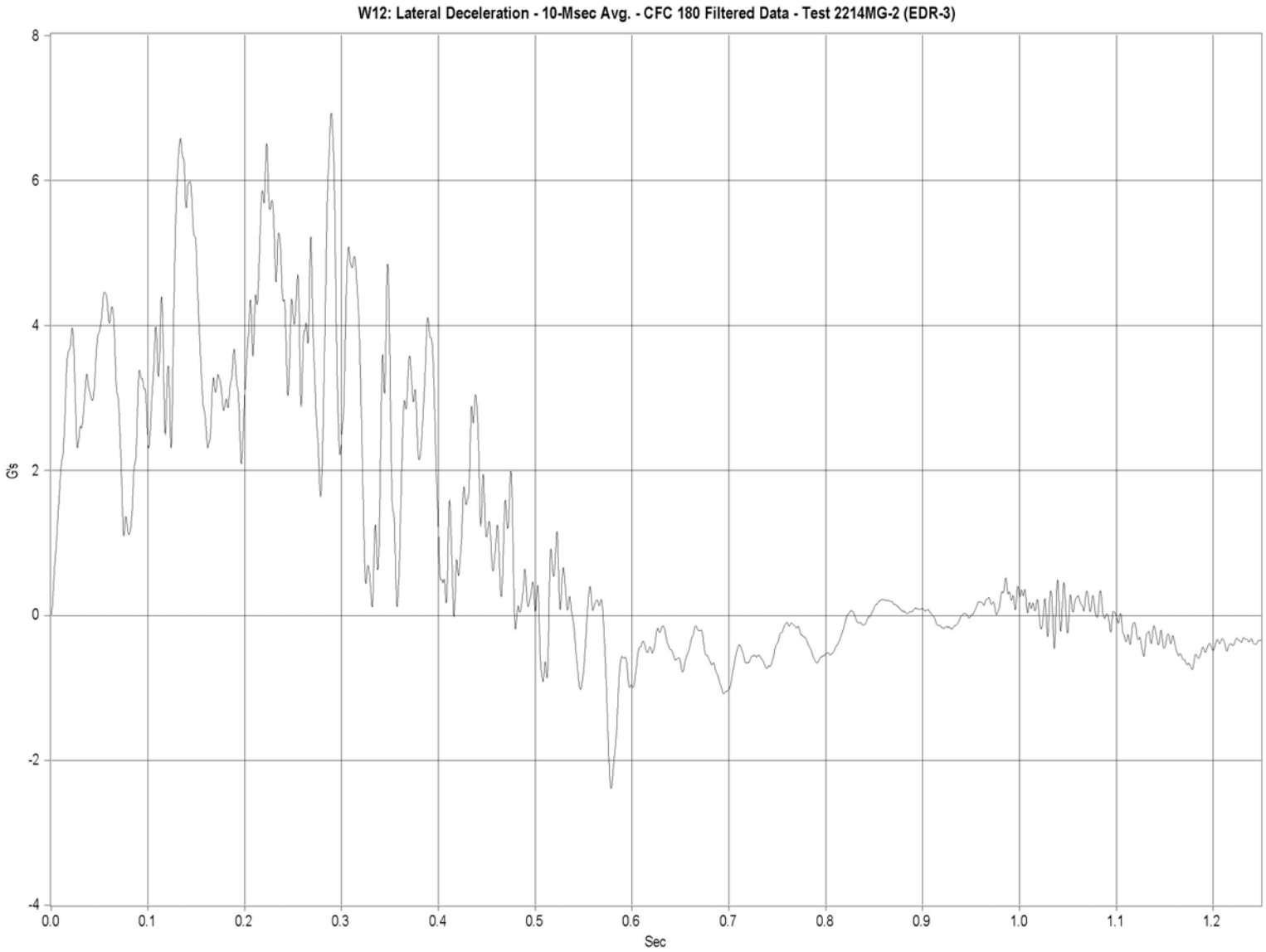


Figure D-4. Graph of Lateral Deceleration, Test 2214MG-2

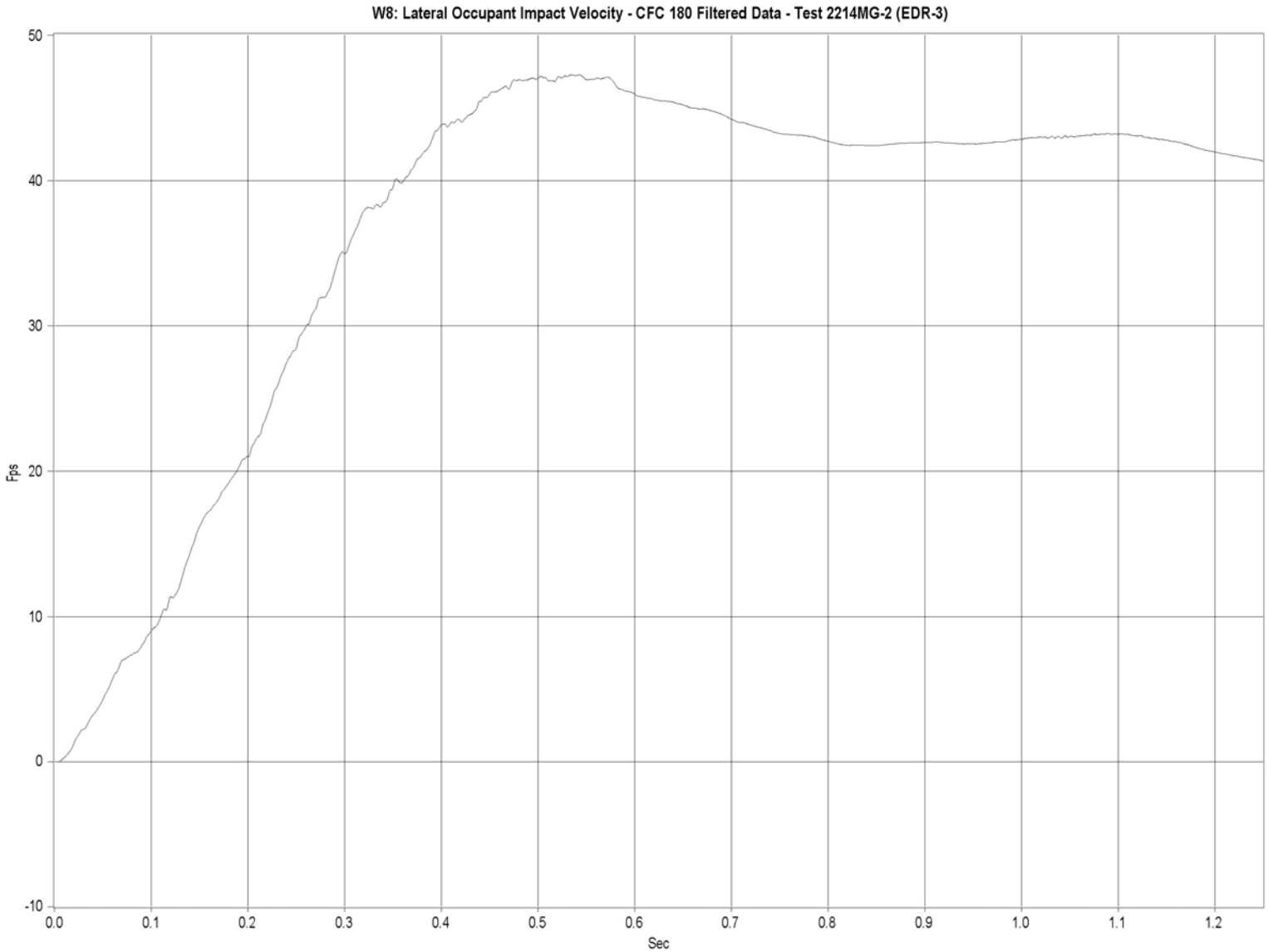


Figure D-5. Graph of Lateral Occupant Impact Velocity, Test 2214MG-2

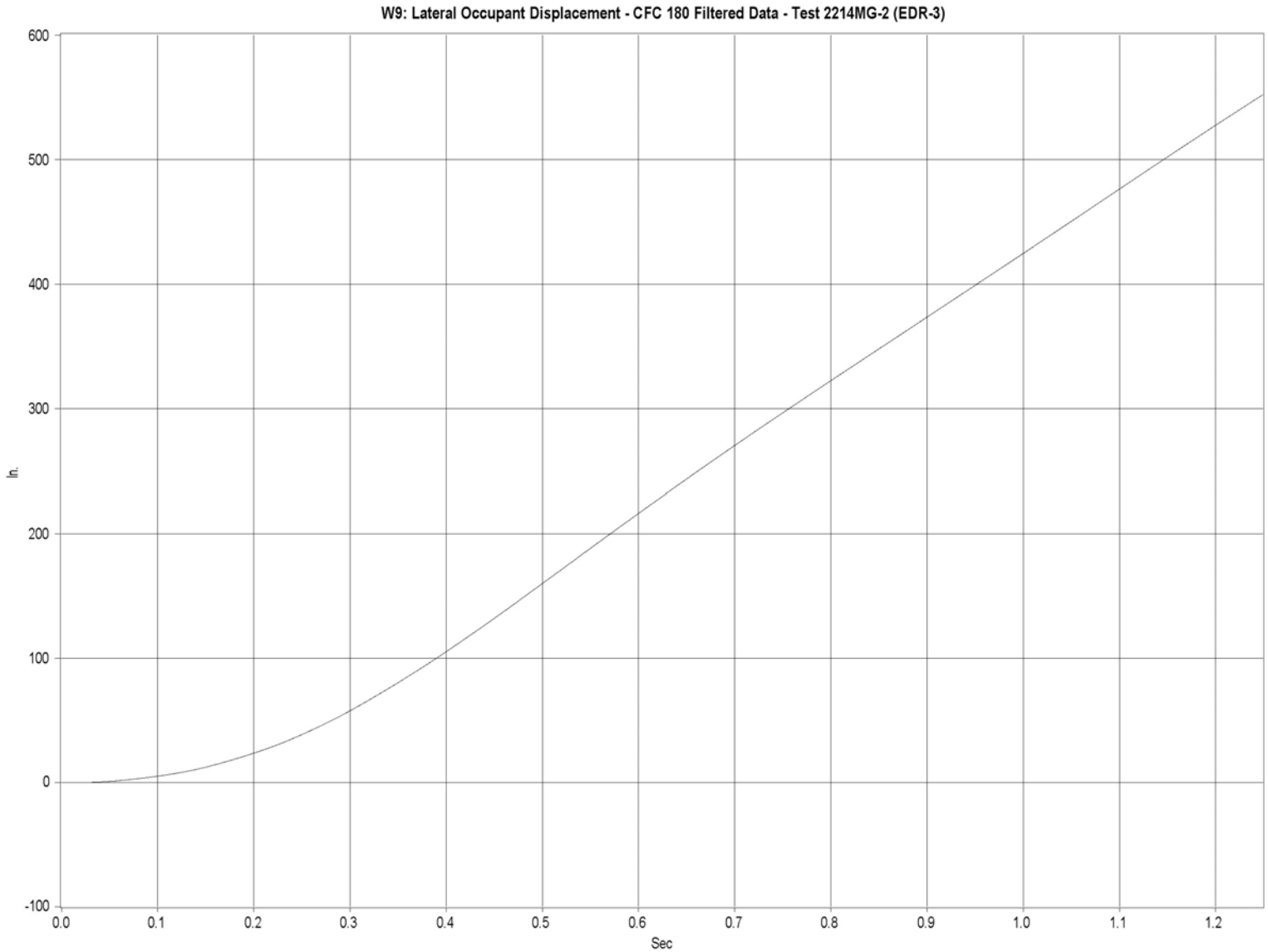


Figure D-6. Graph of Lateral Occupant Displacement, Test 2214MG-2

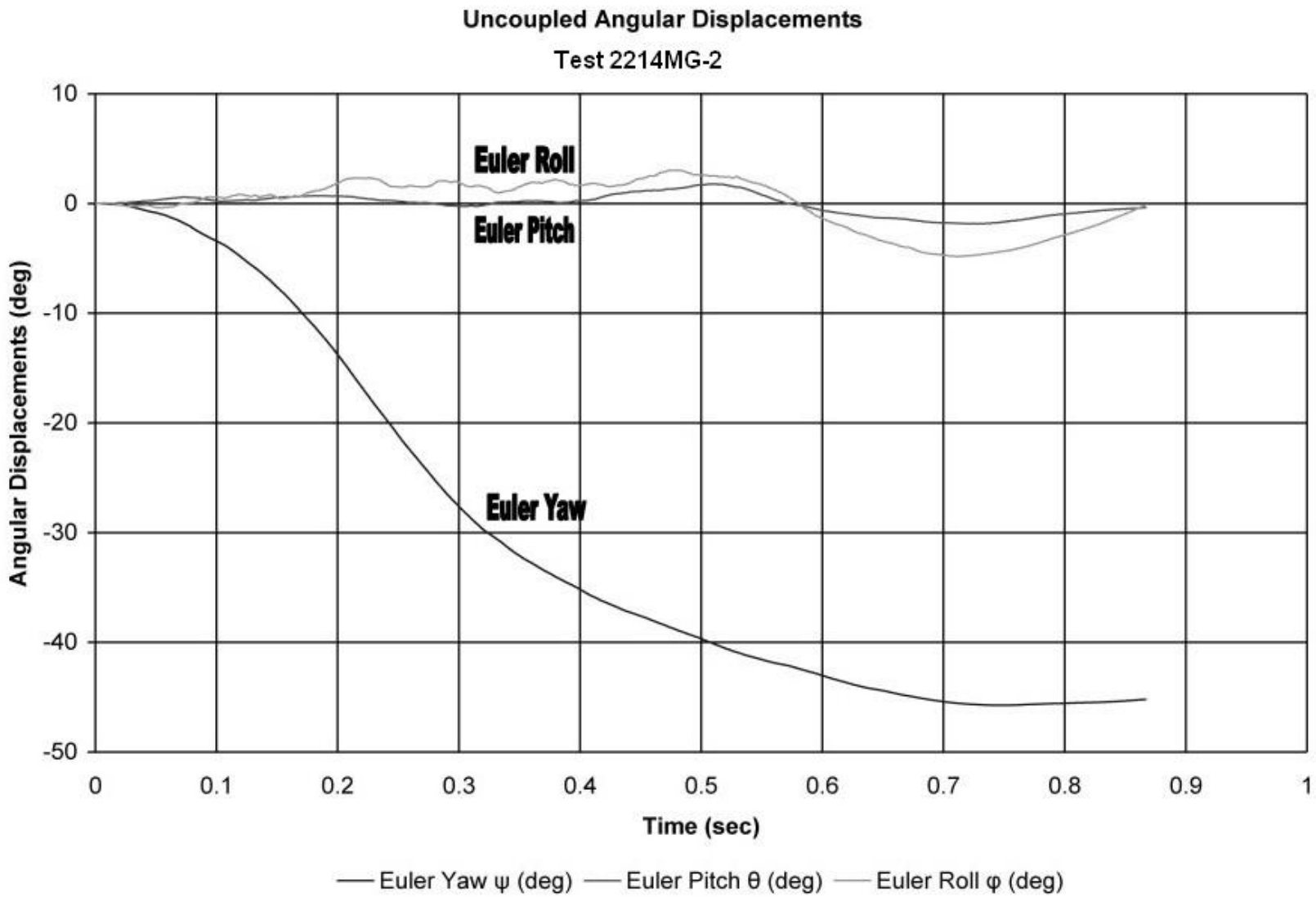


Figure D-7. Graph of Roll, Pitch, and Yaw Angular Displacements, Test 2214MG-2