PERFORMANCE EVALUATION OF THE SKT-MGS TANGENT END TERMINAL – UPDATE TO NCHRP 350 TEST NO. 3-34 (2214TT-1)

Submitted by

Karla A. Polivka, M.S.M.E., E.I.T.
Research Associate Engineer

Ronald K. Faller, Ph.D., P.E.
Research Assistant Professor

Dean L. Sicking, Ph.D., P.E.
Professor and MwRSF Director

John R. Rohde, Ph.D., P.E.
Associate Professor

Bob W. Bielenberg, M.S.M.E., E.I.T.
Research Associate Engineer

John D. Reid, Ph.D.
Associate Professor

Brian A. Coon, Ph.D., P.E.
Research Associate Engineer

MIDWEST ROADSIDE SAFETY FACILITY
University of Nebraska-Lincoln
527 Nebraska Hall
Lincoln, Nebraska 68588-0529
(402) 472-6864

Submitted to

NATIONAL COOPERATIVE HIGHWAY RESEARCH PROGRAM
Transportation Research Board
National Research Council
2101 Constitution Avenue, N.W.
Washington, D.C. 20418

MwRSF Research Report No. TRP-03-176-06

October 12, 2006

Technical Report Documentation Page

1. Report No.	2.	3. Recipient's Accession No.
TRP-03-176-06		

4. Title and Subtitle	5. Report Date
Performance Evaluation of the SKT-MGS Tangent End Terminal – Update to NCHRP 350 Test No. 3-34 (2214TT-1)	October 12, 2006
	6.

7. Author(s)	8. Performing Organization Report No.
Polivka, K.A., Faller, R.K., Sicking, D.L., Rohde, J.R., Bielenberg, B.W., Reid, J.D., and Coon, B.A.	TRP-03-176-06

9. Performing Organization Name and Address	10. Project/Task/Work Unit No.
Midwest Roadside Safety Facility (MwRSF) University of Nebraska-Lincoln 527 Nebraska Hall Lincoln, NE 68588-0529	
	11. Contract © or Grant (G) No. NCHRP 22-14(2)

12. Sponsoring Organization Name and Address	13. Type of Report and Period Covered
National Cooperative Highway Research Program Transportation Research Board National Research Council 2101 Constitution Avenue, N.W. Washington, D.C. 20418	Final Report 2004-2006
	14. Sponsoring Agency Code

15. Supplementary Notes

Prepared in cooperation with U.S. Department of Transportation, Federal Highway Administration

16. Abstract (Limit: 200 words)

Based on the proposed changes to the National Cooperative Highway Research Program (NCHRP) Report No. 350 guidelines, NCHRP Project 22-14(2) researchers deemed it appropriate to evaluate an end terminal for a strong-post, W-beam guardrail systems prior to finalizing the new crash testing procedures and guidelines. For this effort, the SKT-MGS Tangent End Terminal was selected for evaluation. One full-scale vehicle crash test was performed on the longitudinal barrier system in accordance with the Test Level 3 (TL-3) requirements presented in the Update to NCHRP Report No. 350. For the terminal testing program, an 1100C small car vehicle was used.

The end terminal system, mounted at the metric top rail height of 813 mm (32 in.), provided an acceptable safety performance when impacted by the small car, thus meeting the proposed TL-3 requirements presented in the Update to NCHRP Report No. 350.

17. Document Analysis/Descriptors	18. Availability Statement
Highway Safety, Roadside Appurtenances, Longitudinal Barriers, Guardrail, End Terminal, Crash Test, Compliance Test, NCHRP 350 Update	No restrictions. Document available from: National Technical Information Services, Springfield, Virginia 22161

19. Security Class (this report)	20. Security Class (this page)	21. No. of Pages	22. Price
Unclassified	Unclassified	90	

DISCLAIMER STATEMENT

The contents of this report reflect the views of the authors who are responsible for the facts and the accuracy of the data presented herein. The contents do not necessarily reflect the official views nor policies of the National Research Council of the Transportation Research Board nor the Federal Highway Administration. This report does not constitute a standard, specification, or regulation.

ACKNOWLEDGMENTS

The authors wish to acknowledge several sources that made a contribution to this project: (1) the National Research Council of the Transportation Research Board for sponsoring this project; and (2) MwRSF personnel for constructing the barrier and conducting the crash test.

A special thanks is also given to the following individuals who made a contribution to the completion of this research project.

Midwest Roadside Safety Facility

J.C. Holloway, M.S.C.E., E.I.T., Research Manager
C.L. Meyer, B.S.M.E., E.I.T., Research Engineer II
A.T. Russell, B.S.B.A., Laboratory Mechanic II
K.L. Krenk, B.S.M.A, Field Operations Manager
A.T. McMaster, Laboratory Mechanic I
Undergraduate and Graduate Assistants

Transportation Research Board

Charles W. Niessner, Senior Program Officer
NCHRP 22-14(2) Panel Members

Federal Highway Administration

John Perry, P.E., Nebraska Division Office
Danny Briggs, Nebraska Division Office

Dunlap Photography

James Dunlap, President and Owner

TABLE OF CONTENTS

Page

TECHNICAL REPORT DOCUMENTATION PAGE i

DISCLAIMER STATEMENT ii

ACKNOWLEDGMENTS iii

TABLE OF CONTENTS iv
List of Figures vi
List of Tables viii

1 INTRODUCTION 1
1.1 Problem Statement 1
1.2 Objective 2
1.3 Scope 2

2 TEST REQUIREMENTS AND EVALUATION CRITERIA 3
2.1 Test Requirements 3
2.2 Evaluation Criteria 4

3 TEST CONDITIONS 7
3.1 Test Facility 7
3.2 Vehicle Tow and Guidance System 7
3.3 Test Vehicles 7
3.4 Data Acquisition Systems 10
3.4.1 Accelerometers 10
3.4.2 Rate Transducers 12
3.4.3 High-Speed Photography 12
3.4.4 Pressure Tape Switches 13

4 DESIGN DETAILS 15

5 CRASH TEST 36
5.1 Test 2214TT-1 36
5.2 Test Description 36
5.3 Barrier Damage 37
5.4 Vehicle Damage 38
5.5 Occupant Risk Values 39
5.6 Discussion 39

6 SUMMARY AND CONCLUSIONS 57

7 REFERENCES 59

8 APPENDICES 60
APPENDIX A - English-Unit System Drawings 61
APPENDIX B - Test Summary Sheet in English Units 76
APPENDIX C - Occupant Compartment Deformation Data, Test 2214TT-1 78
APPENDIX D - Accelerometer and Rate Transducer Data Analysis, Test 2214TT-1 . . 83

List of Figures

Page

1. Test Vehicle, Test 2214TT-1 8
2. Vehicle Dimensions, Test 2214TT-1 9
3. Vehicle Target Locations, Test 2214TT-1 11
4. Location of High-Speed Cameras, Test 2214TT-1 14
5. Layout of Midwest Guardrail System End Terminal Design 17
6. Midwest Guardrail System End Terminal - SKT Details 18
7. Midwest Guardrail System End Terminal - End Rail Details 19
8. Midwest Guardrail System End Terminal - Rail Details 20
9. Midwest Guardrail System End Terminal - Post Details 21
10. Midwest Guardrail System End Terminal - Post Details 22
11. Midwest Guardrail System End Terminal - Post Details 23
12. Midwest Guardrail System End Terminal - Anchorage Details 24
13. Midwest Guardrail System End Terminal - Anchorage Details 25
14. Midwest Guardrail System End Terminal - SKT Head Details 26
15. Midwest Guardrail System End Terminal - SKT Head Details 27
16. Midwest Guardrail System End Terminal - SKT Head Details 28
17. Midwest Guardrail System End Terminal - SKT Head Details 29
18. Midwest Guardrail System End Terminal - SKT Head Details 30
19. Midwest Guardrail System End Terminal 31
20. Midwest Guardrail System End Terminal 32
21. Midwest Guardrail System End Terminal 33
22. Midwest Guardrail System End Terminal 34
23. Midwest Guardrail System End Terminal 35
24. Summary of Test Results and Sequential Photographs, Test 2214TT-1 41
25. Additional Sequential Photographs, Test 2214TT-1 42
26. Additional Sequential Photographs, Test 2214TT-1 43
27. Additional Sequential Photographs, Test 2214TT-1 44
28. Documentary Photographs, Test 2214TT-1 45
29. Documentary Photographs, Test 2214TT-1 46
30. Impact Location, Test 2214TT-1 47
31. Vehicle Final Position and Trajectory Marks, Test 2214TT-1 48
32. Midwest Guardrail System End Terminal Damage, Test 2214TT-1 49
33. Midwest Guardrail System End Terminal Damage, Test 2214TT-1 50
34. Midwest Guardrail System End Terminal Damage, Test 2214TT-1 51
35. Midwest Guardrail System End Terminal Damage, Test 2214TT-1 52
36. Vehicle Damage, Test 2214TT-1 53
37. Vehicle Damage, Test 2214TT-1 54
38. Vehicle Undercarriage Damage, Test 2214TT-1 55
39. Occupant Compartment Damage, Test 2214TT-1 56
A-1. Layout of Midwest Guardrail System End Terminal Design (English) 62
A-2. Midwest Guardrail System End Terminal - SKT Details (English) 63

A-3. Midwest Guardrail System End Terminal - SKT End Rail Details (English) 64
A-4. Midwest Guardrail System End Terminal - Rail Details (English) 65
A-5. Midwest Guardrail System End Terminal - Post Details (English) 66
A-6. Midwest Guardrail System End Terminal - Post Details (English) 67
A-7. Midwest Guardrail System End Terminal - Post Details (English) 68
A-8. Midwest Guardrail System End Terminal - Anchorage Details (English) 69
A-9. Midwest Guardrail System End Terminal - Anchorage Details (English) 70
A-10. Midwest Guardrail System End Terminal - SKT Head Details (English) 71
A-11. Midwest Guardrail System End Terminal - SKT Head Details (English) 72
A-12. Midwest Guardrail System End Terminal - SKT Head Details (English) 73
A-13. Midwest Guardrail System End Terminal - SKT Head Details (English) 74
A-14. Midwest Guardrail System End Terminal - SKT Head Details (English) 75
B-1. Summary of Test Results and Sequential Photographs (English), Test 2214TT-1 77
C-1. Occupant Compartment Deformation Data - Set 1, Test 2214TT-1 79
C-2. Occupant Compartment Deformation Data - Set 2, Test 2214TT-1 80
C-3. Occupant Compartment Deformation Index (OCDI), Test 2214TT-1 81
C-4. NASS Crush Data, Test 2214TT-1 82
D-1. Graph of Longitudinal Deceleration, Test 2214TT-1 84
D-2. Graph of Longitudinal Occupant Impact Velocity, Test 2214TT-1 85
D-3. Graph of Longitudinal Occupant Displacement, Test 2214TT-1 86
D-4. Graph of Lateral Deceleration, Test 2214TT-1 87
D-5. Graph of Lateral Occupant Impact Velocity, Test 2214TT-1 88
D-6. Graph of Lateral Occupant Displacement, Test 2214TT-1 89
D-7. Graph of Roll, Pitch, and Yaw Angular Displacements, Test 2214TT-1 90

List of Tables

Page

1. Update to NCHRP Report No. 350 Test Level 3 Crash Test Conditions 5
2. Update to NCHRP Report No. 350 Evaluation Criteria for Crash Tests 6
3. Summary of Safety Performance Evaluation Results 58

1 INTRODUCTION

1.1 Problem Statement

In the late 1990s, roadside safety experts, State DOT representatives, Federal government officials, and industry personnel began discussions and preparations for updating the National Cooperative Highway Research Program (NCHRP) Report No. 350 safety performance guidelines (1). The new guidelines would improve upon existing test procedures, consider changes in the vehicle fleet, provide criteria for new roadside hardware categories and re-evaluate the appropriateness of the impact conditions.

In 1997, NCHRP Project 22-14, entitled *Improvement of the Procedures for the Safety Performance Evaluation of Roadside Features*, was initiated with the intent to: (1) evaluate the relevance and efficacy of the crash testing procedures, (2) assess the needs for updating NCHRP Report No. 350, and (3) provide recommended strategies for their implementation. Following the completion of this NCHRP study at the Texas Transportation Institute (TTI) in 2001, a follow-on research study was begun in 2002. NCHRP Project 22-14(2), entitled *Improved Procedures for Safety Performance Evaluation of Roadside Features*, was undertaken by Midwest Roadside Safety Facility (MwRSF) researchers with the objectives to: (1) prepare the revised crash testing guidelines, (2) assess the effects of any proposed guidelines, and (3) identify research needs for future improvements to the procedures.

Consequently, it was anticipated that a number of revisions would be incorporated into the Update of NCHRP Report No. 350 guidelines (2). For example, changes in the vehicle fleet have resulted in the need to reassess the small car and pickup truck test vehicles. Accordingly, new, heavier test vehicles have been selected for both the small car and light truck classes of vehicles.

Additionally, during the second study, researchers determined that the 100 km/h (62.1 mph) impact speed and 25 degree impact angle would remain the same as used in NCHRP Report No. 350 for the large passenger vehicle class impacting longitudinal barriers. However, the impact angle for the small car impact condition would increase from 20 to 25 degrees for evaluating longitudinal barriers and the length-of-need for guardrail terminals. The effects of any changes to vehicle specifications or impact conditions must be understood before the safety performance evaluation guidelines are finalized. Therefore, a series of full-scale crash tests on NCHRP Report No. 350 approved systems were to be conducted with the new test vehicles and impact conditions.

1.2 Objective

The objective of the research project was to evaluate the safety performance of the SKT-MGS Tangent End Terminal when full-scale vehicle crash tested according to the test designation no. 3-34 criteria presented in the Update of NCHRP Report No. 350 guidelines (2).

1.3 Scope

The research objective was achieved through the completion of several tasks. First, a full-scale vehicle crash test was performed on the SKT-MGS tangent end terminal system. The crash test utilized a small car, weighing approximately 1,100 kg (2,425 lbs). The target impact conditions for the test were an impact speed of 100.0 km/h (62.1 mph) and an impact angle of 15 degrees at the Critical Impact Point (CIP) of the terminal. Next, the test results were analyzed, evaluated, and documented. Finally, conclusions and recommendations were made that pertain to the safety performance of the SKT-MGS tangent end terminal system relative to the test performed.

2 TEST REQUIREMENTS AND EVALUATION CRITERIA

2.1 Test Requirements

Historically, guardrail end terminal systems have been required to satisfy impact safety standards in order to be accepted by the Federal Highway Administration (FHWA) for use on National Highway System (NHS) construction projects or as a replacement for existing designs not meeting current safety standards. In recent years, these safety standards have consisted of the guidelines and procedures published in NCHRP Report No. 350 (1). However, NCHRP Project 22-14(2) generated revised testing procedures and guidelines for use in the evaluation of roadside safety appurtenances and were presented in the draft report entitled, *NCHRP Report 350 Update* (2). Therefore, according to Test Level 3 (TL-3) of the Update to NCHRP Report No. 350, gating end terminals must be subjected to eight full-scale vehicle crash tests. The eight full-scale crash tests are as follows:

1. Test Designation 3-30. An 1,100-kg (2,425-lb) passenger car impacting at a nominal speed and angle of 100.0 km/h (62.1 mph) and 0 degrees, respectively, on the nose of the end terminal with a ¼-point offset.

2. Test Designation 3-31. A 2,270-kg (5,004-lb) pickup truck impacting at a nominal speed and angle of 100.0 km/h (62.1 mph) and 0 degrees, respectively, on the nose of the end terminal.

3. Test Designation 3-32. An 1,100-kg (2,425-lb) passenger car impacting at a nominal speed and angle of 100.0 km/h (62.1 mph) and 5 degrees, respectively, on the nose of the end terminal.

4. Test Designation 3-33. A 2,270-kg (5,004-lb) pickup truck impacting at a nominal speed and angle of 100.0 km/h (62.1 mph) and 5 degrees, respectively, on the nose of the end terminal.

5. Test Designation 3-34. An 1,100-kg (2,425-lb) passenger car impacting at a nominal speed and angle of 100.0 km/h (62.1 mph) and 15 degrees, respectively, and at the Critical Impact Point (CIP) on the end terminal.

6. Test Designation 3-35. A 2,270-kg (5,004-lb) pickup truck impacting at a nominal speed and angle of 100.0 km/h (62.1 mph) and 25 degrees, respectively, and at the beginning of the Length-of-Need (LON) on the end terminal.

7. Test Designation 3-37. A 2,270-kg (5,004-lb) pickup truck impacting at a nominal speed and angle of 100.0 km/h (62.1 mph) and 25 degrees, respectively, and at the CIP for reverse direction impacts on the end terminal.

8. Test Designation 3-38. A 1,500-kg (3,307-lb) mid-size vehicle impacting at a nominal speed and angle of 100.0 km/h (62.1 mph) and 0 degrees, respectively, on the nose of the end terminal.

The test conditions for TL-3 end terminals are summarized in Table 1. Test Designation 3-34 was conducted for the SKT-MGS tangent end terminal system described herein.

2.2 Evaluation Criteria

According to the Update to NCHRP Report No. 350, the evaluation criteria for full-scale vehicle crash testing are based on three appraisal areas: (1) structural adequacy; (2) occupant risk; and (3) vehicle trajectory after collision. Criteria for structural adequacy are intended to evaluate the ability of the barrier to contain, redirect, or allow controlled vehicle penetration in a predictable manner. Occupant risk evaluates the degree of hazard to occupants in the impacting vehicle. Vehicle trajectory after collision is a measure of the potential for the post-impact trajectory of the vehicle to cause subsequent multi-vehicle accidents. This criterion also indicates the potential safety hazard for the occupants of other vehicles or the occupants of the impacting vehicle when subjected secondary collisions with other fixed objects. These three evaluation criteria are summarized in Table 2 and defined in greater detail in the Update to NCHRP Report No. 350 report (2). The full-scale vehicle crash tests were conducted and reported in accordance with the procedures provided in the Update to NCHRP Report No. 350.

Table 1. Update to NCHRP Report No. 350 Test Level 3 Crash Test Conditions

Test Article	Test Designation	Test Vehicle	Impact Conditions			Evaluation Criteria [1]
			Speed		Angle (degrees)	
			(km/h)	(mph)		
Terminals	3-30	1100C	100	62.1	0	A,C,D,F,H,I,N,O
	3-31	2270P	100	62.1	0	A,C,D,F,H,I,N,O
	3-32	1100C	100	62.1	5	A,C,D,F,H,I,N,O
	3-33	2270P	100	62.1	5	A,C,D,F,H,I,N,O
	3-34	1100C	100	62.1	15	A,C,D,F,H,I,N
	3-35	2270P	100	62.1	25	A,D,F,H,I,M
	3-37	2270P	100	62.1	25	A,C,D,F,H,I,M
	3-38	1500A	100	62.1	0	A,C,D,F,H,I,N,O

[1] Evaluation criteria explained in Table 2.

Table 2. Update to NCHRP Report No. 350 Evaluation Criteria for Crash Tests

Structural Adequacy	A. Test article should contain and redirect the vehicle or bring the vehicle to a controlled stop; the vehicle should not penetrate, underride, or override the installation although controlled lateral deflection of the test article is acceptable.
	C. Acceptable test article performance may be by redirection, controlled penetration, or controlled stopping of the vehicle.
Occupant Risk	D. Detached elements, fragments or other debris from the test article should not penetrate or show potential for penetrating the occupant compartment, or present an undue hazard to other traffic, pedestrians, or personnel in a work zone. Deformations of, or intrusions into, the occupant compartment should not exceed limits set forth in Section 5.3 and Appendix E of the Update to NCHRP Report No. 350.
	F. The vehicle should remain upright during and after collision.
	H. Longitudinal and lateral occupant impact velocities should fall below the preferred value of 9.0 m/s (29.5 ft/s), or at least below the maximum allowable value of 12.0 m/s (39.4 ft/s).
	I. Longitudinal and lateral occupant ridedown accelerations should fall below the preferred value of 15 Gs, or at least below the maximum allowable value of 20.0 Gs.
Vehicle Trajectory	M. After impact, the vehicle shall exit the barrier within the exit box.
	N. Vehicle trajectory behind the test article is acceptable.
	O. The front of the vehicle shall not rebound more than 6 m (19.7 ft) beyond the original point of impact with the test article.

3 TEST CONDITIONS

3.1 Test Facility

The testing facility is located at the Lincoln Air Park on the northwest side of the Lincoln Municipal Airport and is approximately 8.0 km (5 mi.) northwest of the University of Nebraska-Lincoln.

3.2 Vehicle Tow and Guidance System

A reverse cable tow system with a 1:2 mechanical advantage was used to propel the test vehicle. The distance traveled and the speed of the tow vehicle were one-half that of the test vehicle. The test vehicle was released from the tow cable before impact with the barrier system. A digital speedometer was located on the tow vehicle to increase the accuracy of the test vehicle impact speed.

A vehicle guidance system developed by Hinch (3) was used to steer the test vehicle. A guide-flag, attached to the front-right wheel and the guide cable, was sheared off before impact with the barrier system. The 9.5-mm (0.375-in.) diameter guide cable was tensioned to approximately 15.6 kN (3,500 lbf), and supported laterally and vertically every 30.48 m (100 ft) by hinged stanchions. The hinged stanchions stood upright while holding up the guide cable, but as the vehicle was towed down the line, the guide-flag struck and knocked each stanchion to the ground. For test 2214TT-1, the vehicle guidance system was 243 m (798 ft) long.

3.3 Test Vehicles

For test 2214TT-1, a 2002 Kia Rio was used as the test vehicle. The test inertial and gross static weights were 1,102 kg (2,430 lbs) and 1,178 kg (2,596 lbs), respectively. The test vehicle is shown in Figure 1, and vehicle dimensions are shown in Figure 2.

Figure 1. Test Vehicle, Test 2214TT-1

Date: 7/1/05 Test Number: 2214TT-1 Model: Rio

Make: Kia Vehicle I.D.#: KNADC123X26147526

Tire Size: 175/65 R14 Year: 2002 Odometer: 29323

*(All Measurements Refer to Impacting Side)

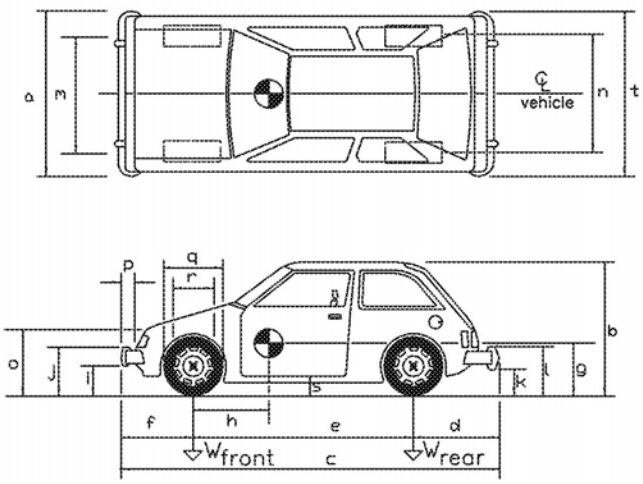

Vehicle Geometry – mm (in.)

a	1638 (64.5)	b	1424 (56.0)
c	4216 (166.0)	d	956 (37.625)
e	2426 (95.5)	f	835 (32.875)
g	546 (21.5)	h	940 (37.0)
i	216 (8.5)	j	502 (19.75)
k	292 (11.5)	l	556 (22.0)
m	1416 (55.75)	n	1445 (56.875)
o	546 (21.5)	p	83 (3.25)
q	584 (23.0)	r	394 (15.5)
s	298 (11.75)	t	1622 (63.875)

Wheel Center Height 273 (10.75)

Engine Type 4 CYL. GAS

Engine Size Small

Transmission Type:

Automatic or Manual

FWD or RWD or 4WD

Weights kg (lbs)	Curb (No Fuel)	Test Inertial	Gross Static
W_{front}	656 (1447)	678 (1494)	715 (1577)
W_{rear}	399 (879)	424 (936)	462 (1019)
W_{total}	1055 (2326)	1102 (2430)	1178 (2596)

GVWR Ratings

Front 767 (1691)

Rear 707 (1559)

Total 1474 (3250)

Note any damage prior to test: Minor body dents

Figure 2. Vehicle Dimensions, Test 2214TT-1

The longitudinal component of the center of gravity was determined using the measured axle weights. The location of the final center of gravity is shown in Figures 1 and 2.

Square black and white-checkered targets were placed on the vehicle to aid in the analysis of the high-speed film and E/cam and Photron video, as shown in Figure 3. Checkered targets were placed on the center of gravity, on the driver's side door, on the passenger's side door, and on the roof of the vehicle. The remaining targets were located for reference so that they could be viewed from the high-speed cameras for film analysis.

The front wheels of the test vehicle were aligned for camber, caster, and toe-in values of zero so that the vehicle would track properly along the guide cable. Two 5B flash bulbs were mounted on both the hood and roof of the vehicle to pinpoint the time of impact with the barrier on the high-speed Photron and AOS videos. The flash bulbs were fired by a pressure tape switch mounted on the front face of the bumper. A remote-controlled brake system was installed in the test vehicle so the vehicle could be brought safely to a stop after the test.

3.4 Data Acquisition Systems

3.4.1 Accelerometers

One triaxial piezoresistive accelerometer system with a range of ±200 Gs was used to measure the acceleration in the longitudinal, lateral, and vertical directions at a sample rate of 10,000 Hz. The environmental shock and vibration sensor/recorder system, Model EDR-4M6, was developed by Instrumented Sensor Technology (IST) of Okemos, Michigan and includes three differential channels as well as three single-ended channels. The EDR-4 was configured with 6 MB of RAM memory and a 1,500 Hz lowpass filter. Computer software, "DynaMax 1 (DM-1)" and "DADiSP", was used to analyze and plot the accelerometer data.

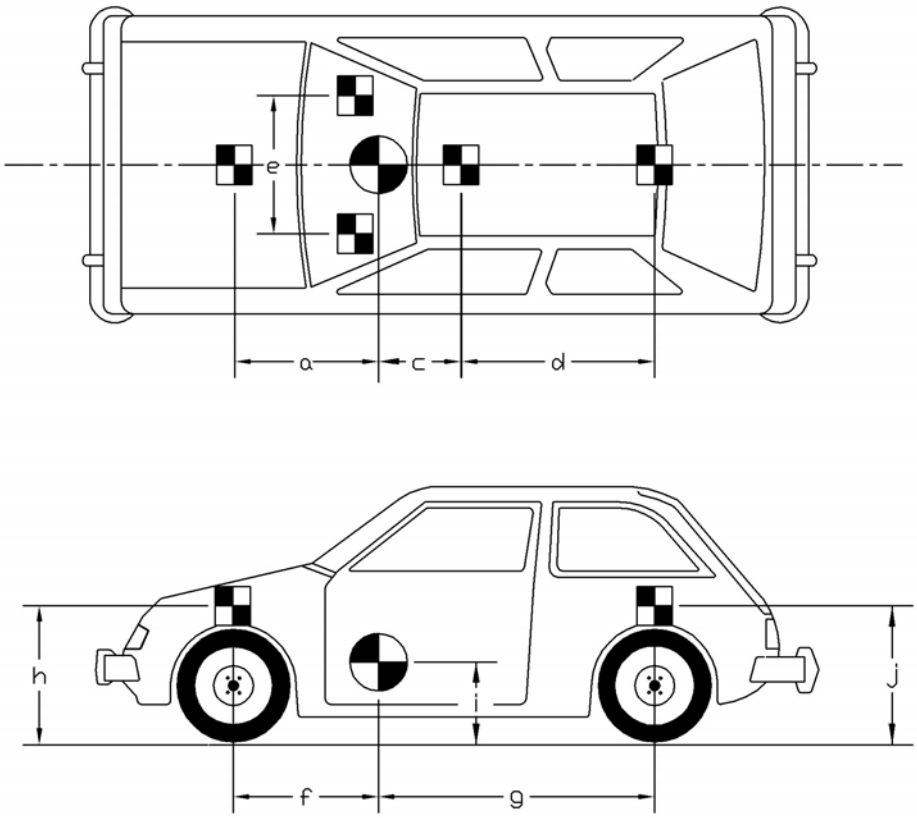

TEST #: 2214TT–1

TARGET GEOMETRY -- mm (in.)

a 908 (35.75)	b –	c 1387 (54.625)	d 705 (27.75)
e 613 (24.125)	f 2426 (95.5)	g 940 (37.0)	h 730 (28.75)
	i 546 (21.5)	j 727 (28.625)	

Figure 3. Vehicle Target Locations, Test 2214TT-1

Another triaxial piezoresistive accelerometer system with a range of ±200 Gs was also used to measure the acceleration in the longitudinal, lateral, and vertical directions at a sample rate of 3,200 Hz. The environmental shock and vibration sensor/recorder system, Model EDR-3, was developed by Instrumental Sensor Technology (IST) of Okemos, Michigan. The EDR-3 was configured with 256 kB of RAM memory and a 1,120 Hz lowpass filter. Computer software, "DynaMax 1 (DM-1)" and "DADiSP", was used to analyze and plot the accelerometer data.

3.4.2 Rate Transducers

An Analog Systems 3-axis rate transducer with a range of 1,200 degrees/sec in each of the three directions (pitch, roll, and yaw) was used to measure the rates of motion of the test vehicle. The rate transducer was mounted inside the body of the EDR-4M6 and recorded data at 10,000 Hz to a second data acquisition board inside the EDR-4M6 housing. The raw data measurements were then downloaded, converted to the appropriate Euler angles for analysis, and plotted. Computer software, "DynaMax 1 (DM-1)" and "DADiSP", was used to analyze and plot the rate transducer data.

3.4.3 High-Speed Photography

For test 2214TT-1, one high-speed Photron video camera, three high-speed AOS VITcam video cameras, and one high-speed Red Lake Ranger video camera, all with operating speeds of 500 frames/sec, were used to film the crash test. Six Canon digital video cameras, with a standard operating speed of 29.97 frames/sec, were also used to film the crash test. Camera details and a schematic of all eleven camera locations for test 2214TT-1 is shown in Figure 4. The Photron, AOS, and Ranger videos and E/cam videos were analyzed using the ImageExpress MotionPlus software and Redlake Motion Scope software, respectively. Actual camera speed and camera divergence

factors were considered in the analysis of the high-speed film.

3.4.4 Pressure Tape Switches

For test 2214TT-1, five pressure-activated tape switches, spaced at 2-m (6.56-ft) intervals, were used to determine the speed of the vehicle before impact. Each tape switch fired a strobe light which sent an electronic timing signal to the data acquisition system as the right-front tire of the test vehicle passed over it. Test vehicle speed was determined from electronic timing mark data recorded using TestPoint software. Strobe lights and high-speed film analysis are used only as a backup in the event that vehicle speed cannot be determined from the electronic data.

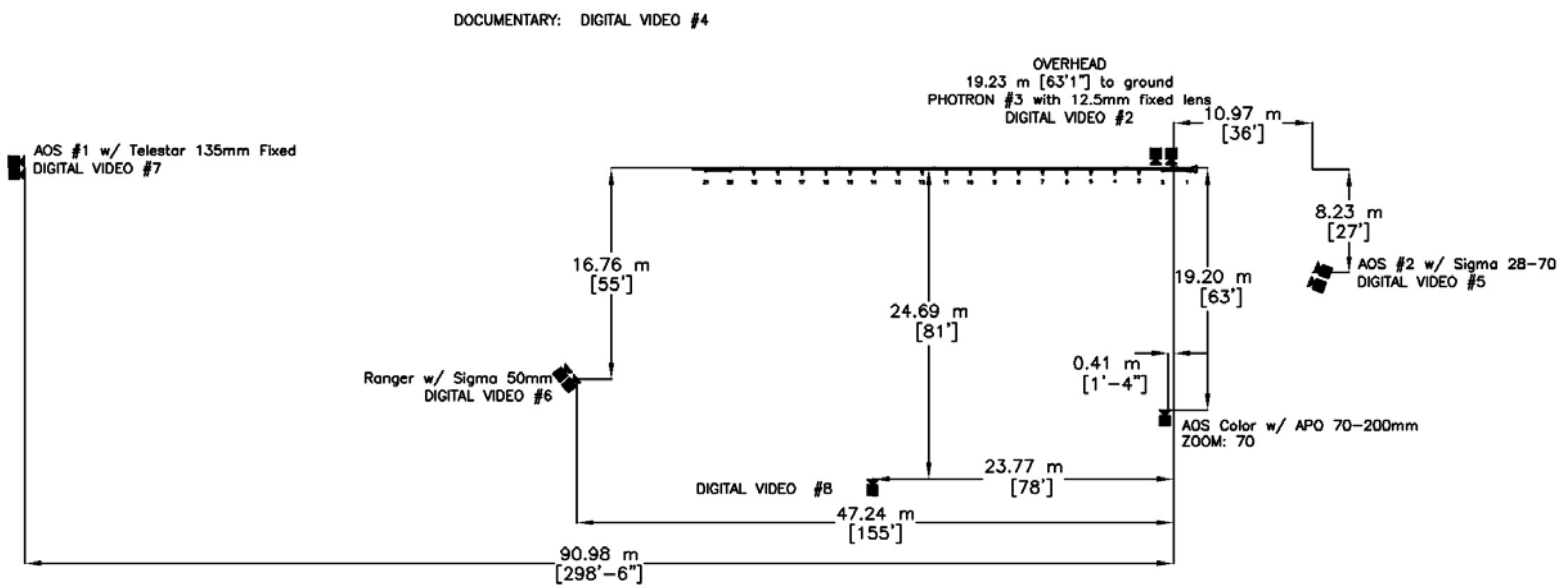

Figure 4. Location of High-Speed Cameras, Test 2214TT-1

4 DESIGN DETAILS

The test installation consisted of 38.10 m (125 ft) of standard 2.66-mm (12-gauge) thick W-beam guardrail supported by wood posts in the end terminal section and steel posts in the longitudinal barrier portion, as shown in Figure 5. The length of the end terminal was 11.43 m (37.5 ft) and featured an SKT impact head. Anchorage systems similar to those used on tangent guardrail terminals were utilized on the downstream end of the guardrail system. Design details are shown in Figures 5 through 18. The corresponding English-unit drawings are shown in Appendix A. Photographs of the test installation are shown in Figures 19 through 23.

The entire system was constructed with twenty-one guardrail posts. Post nos. 3 through 6 were CRT timber posts measuring 152 mm wide x 203 mm deep x 1,829 mm long (6 in. x 8 in. x 72 in.). Post nos. 7 through 19 were galvanized ASTM A36 steel W152x13.4 (W6x9) sections measuring 1,829-mm (6-ft) long. Post nos. 1, 2, 20, and 21 were timber posts measuring 140 mm wide x 190 mm deep x 1,162 mm long (5.5 in. x 7.5 in. x 45.75 in.) and were placed in 1,829-mm (6-ft) long steel foundation tubes. The downstream timber posts and foundation tubes were part of an anchor system designed to replicate the capacity of a tangent guardrail terminal.

Post nos. 1 through 21 were spaced 1,905 mm (75 in.) on center with a soil embedment depth of 991 mm (39 in.), as shown in Figures 5 and 9. The posts were placed in a compacted coarse, crushed limestone material that met Grading B of AASHTO M147-65 (1990) as found in NCHRP Report No. 350. For post nos. 3 through 19, 152-mm wide x 305-mm deep x 362-mm long (6-in. x 12-in. x 14.25-in.) wood spacer blockouts were used to block the rail away from the front face of the posts.

Standard 2.66-mm (12-gauge) thick by 3.81-m (12.5-ft) long W-beam rail elements rails with

additional post bolt slots at half post spacing were placed between post nos. 3 and 21, as shown in Figures 5 and 7. The terminal end rail section was a 2.66-mm (12-gauge) thick by 5.08-m (16-ft 8-in.) long W-beam rail element with five pairs of 13-mm diameter x 102-mm long (0.5-in. x 4-in.) slots spaced 279 mm (11 in.) apart on the upstream end of the rail, as shown in Figure 6. The W-beam's top rail height was 813 mm (32 in.) with a 657-mm (25.875-in.) center mounting height. The rail splices are positioned at the center of the span location between two posts, as shown in Figures 8. All lap-splice connections between the rail sections were configured to reduce vehicle snag at the splice during the crash test.

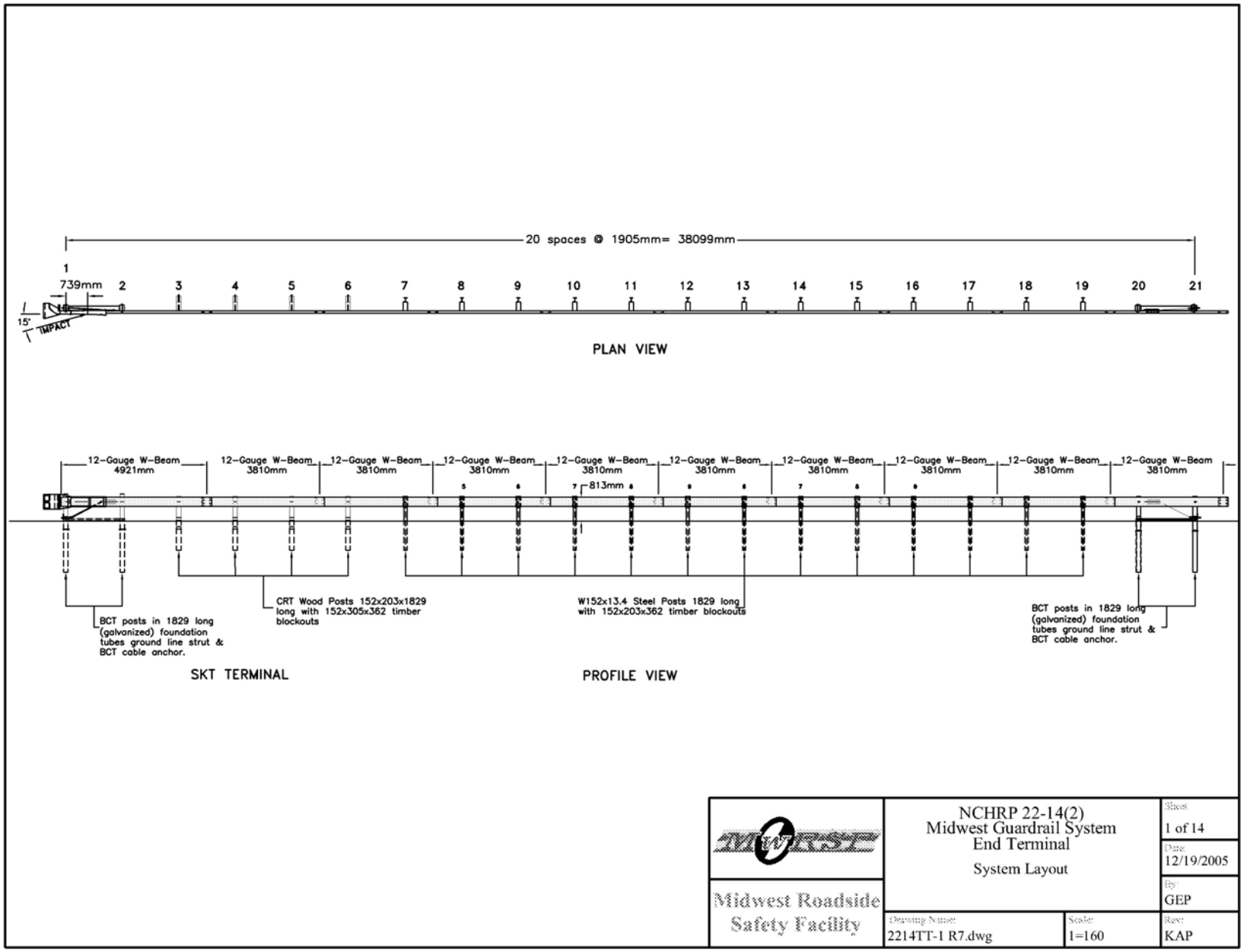

Figure 5. Layout of Midwest Guardrail System End Terminal Design

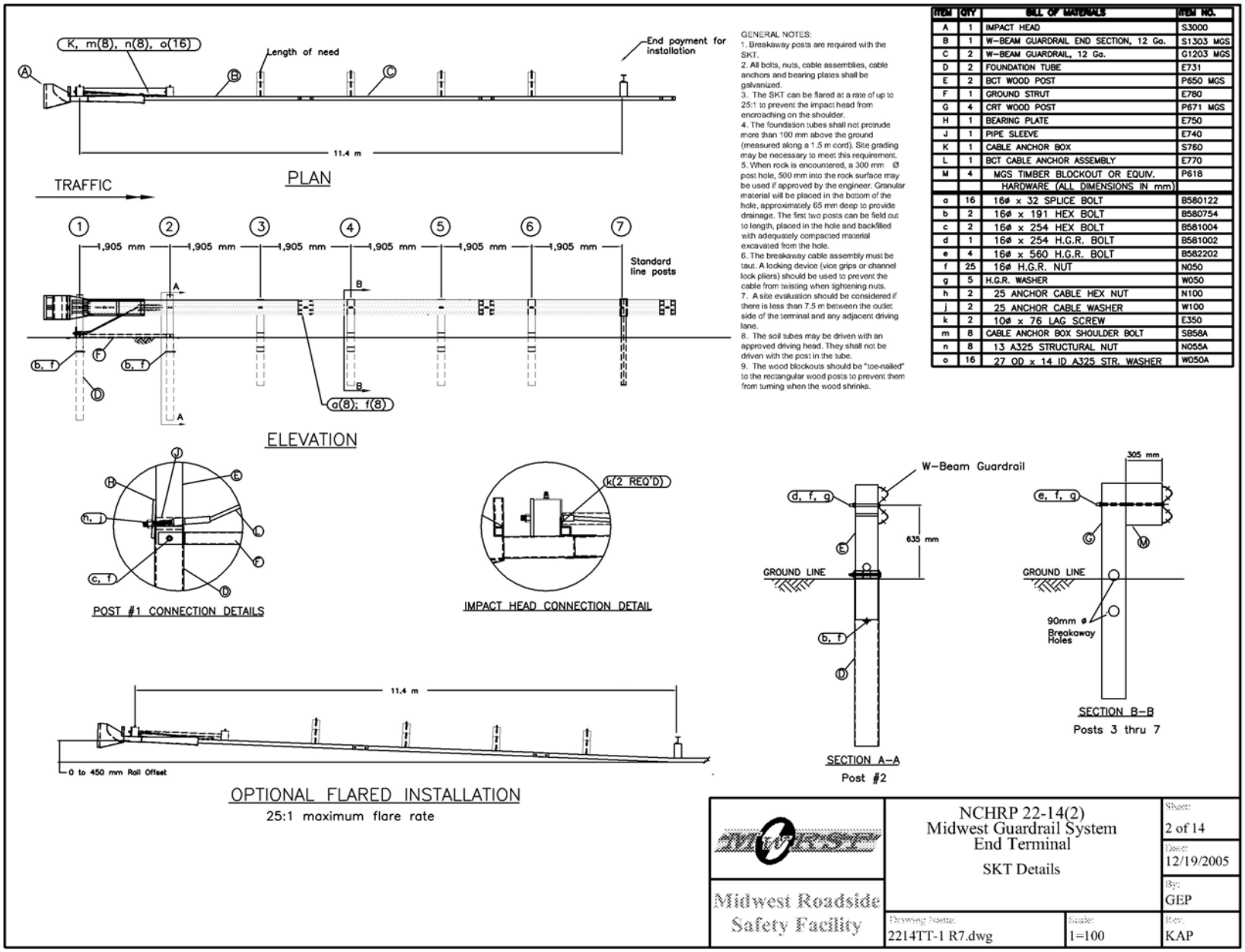

ITEM	QTY	BILL OF MATERIALS	ITEM NO.
A	1	IMPACT HEAD	S3000
B	1	W-BEAM GUARDRAIL END SECTION, 12 Ga.	S1303 MGS
C	2	W-BEAM GUARDRAIL, 12 Ga.	G1203 MGS
D	2	FOUNDATION TUBE	E731
E	2	BCT WOOD POST	P650 MGS
F	1	GROUND STRUT	E780
G	4	CRT WOOD POST	P671 MGS
H	1	BEARING PLATE	E750
J	1	PIPE SLEEVE	E740
K	1	CABLE ANCHOR BOX	S760
L	1	BCT CABLE ANCHOR ASSEMBLY	E770
M	4	MGS TIMBER BLOCKOUT OR EQUIV.	P618
		HARDWARE (ALL DIMENSIONS IN mm)	
a	16	16ø x 32 SPLICE BOLT	B580122
b	2	16ø x 191 HEX BOLT	B580754
c	2	16ø x 254 HEX BOLT	B581004
d	1	16ø x 254 H.G.R. BOLT	B581002
e	4	16ø x 560 H.G.R. BOLT	B582202
f	25	16ø H.G.R. NUT	N050
g	5	H.G.R. WASHER	W050
h	2	25 ANCHOR CABLE HEX NUT	N100
j	2	25 ANCHOR CABLE WASHER	W100
k	2	10ø x 76 LAG SCREW	E350
m	8	CABLE ANCHOR BOX SHOULDER BOLT	SB58A
n	8	13 A325 STRUCTURAL NUT	N055A
o	16	27 OD x 14 ID A325 STR. WASHER	W050A

Figure 6. Midwest Guardrail System End Terminal - SKT Details

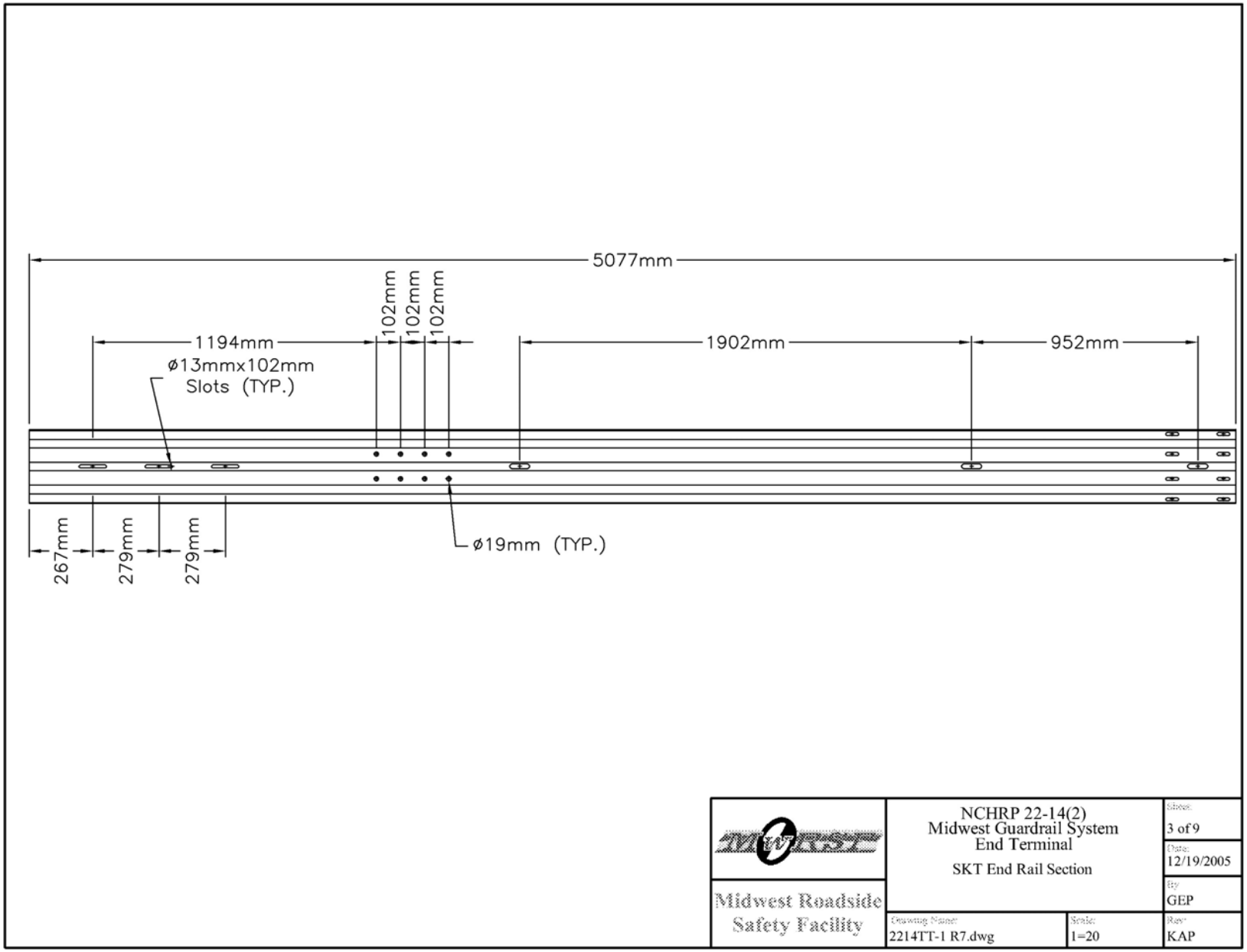

Figure 7. Midwest Guardrail System End Terminal - End Rail Details

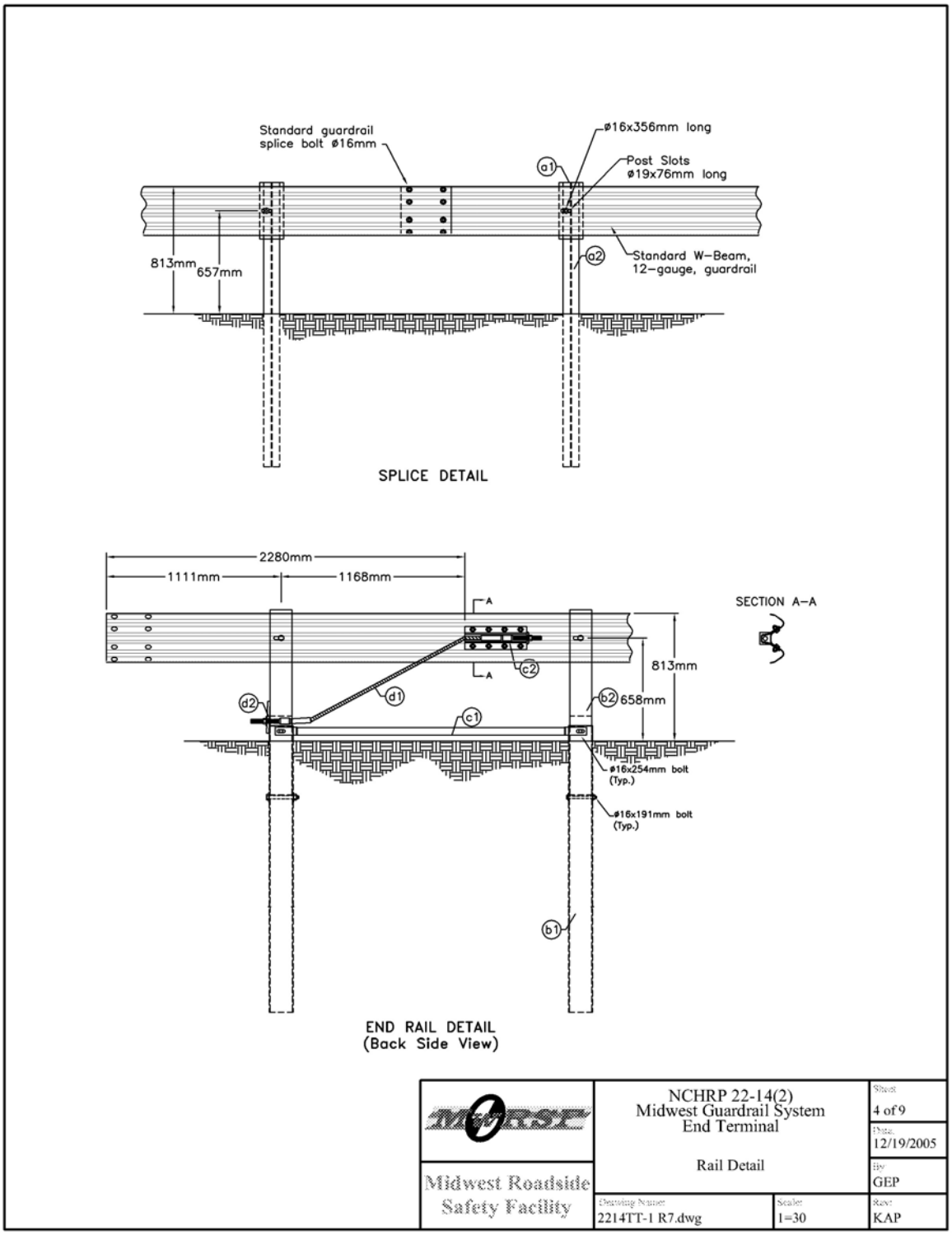

Figure 8. Midwest Guardrail System End Terminal - Rail Details

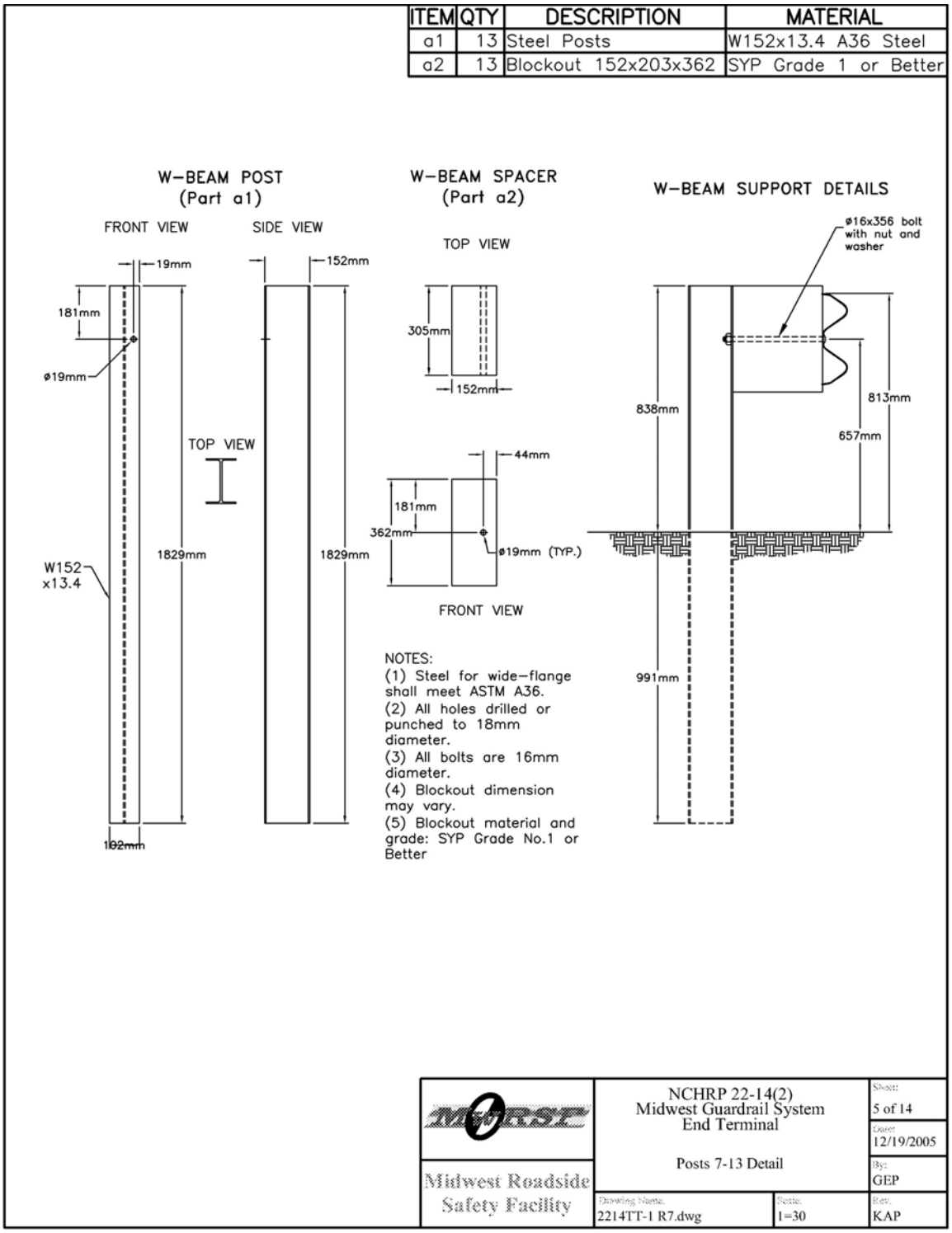

Figure 9. Midwest Guardrail System End Terminal - Post Details

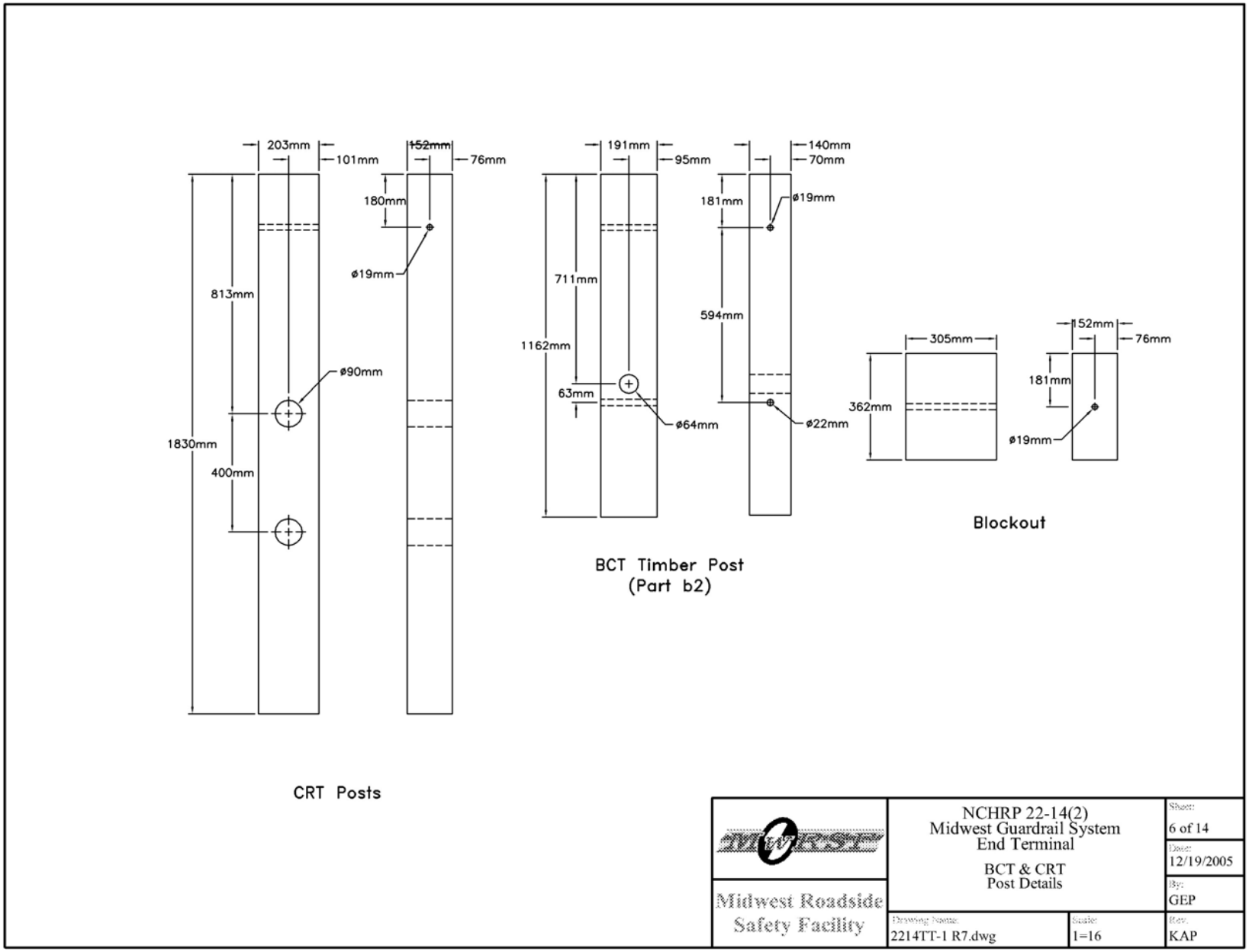

Figure 10. Midwest Guardrail System End Terminal - Post Details

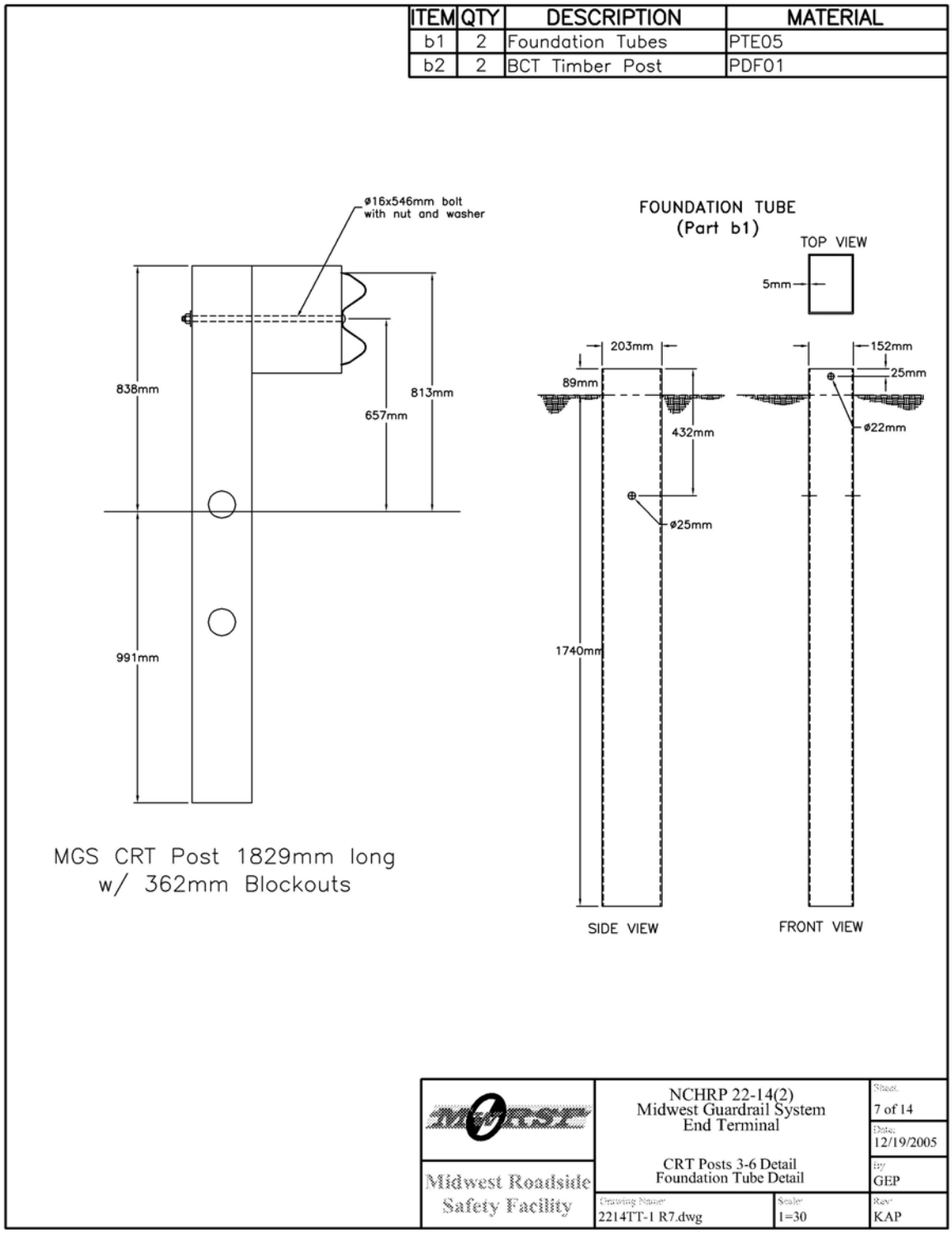

Figure 11. Midwest Guardrail System End Terminal - Post Details

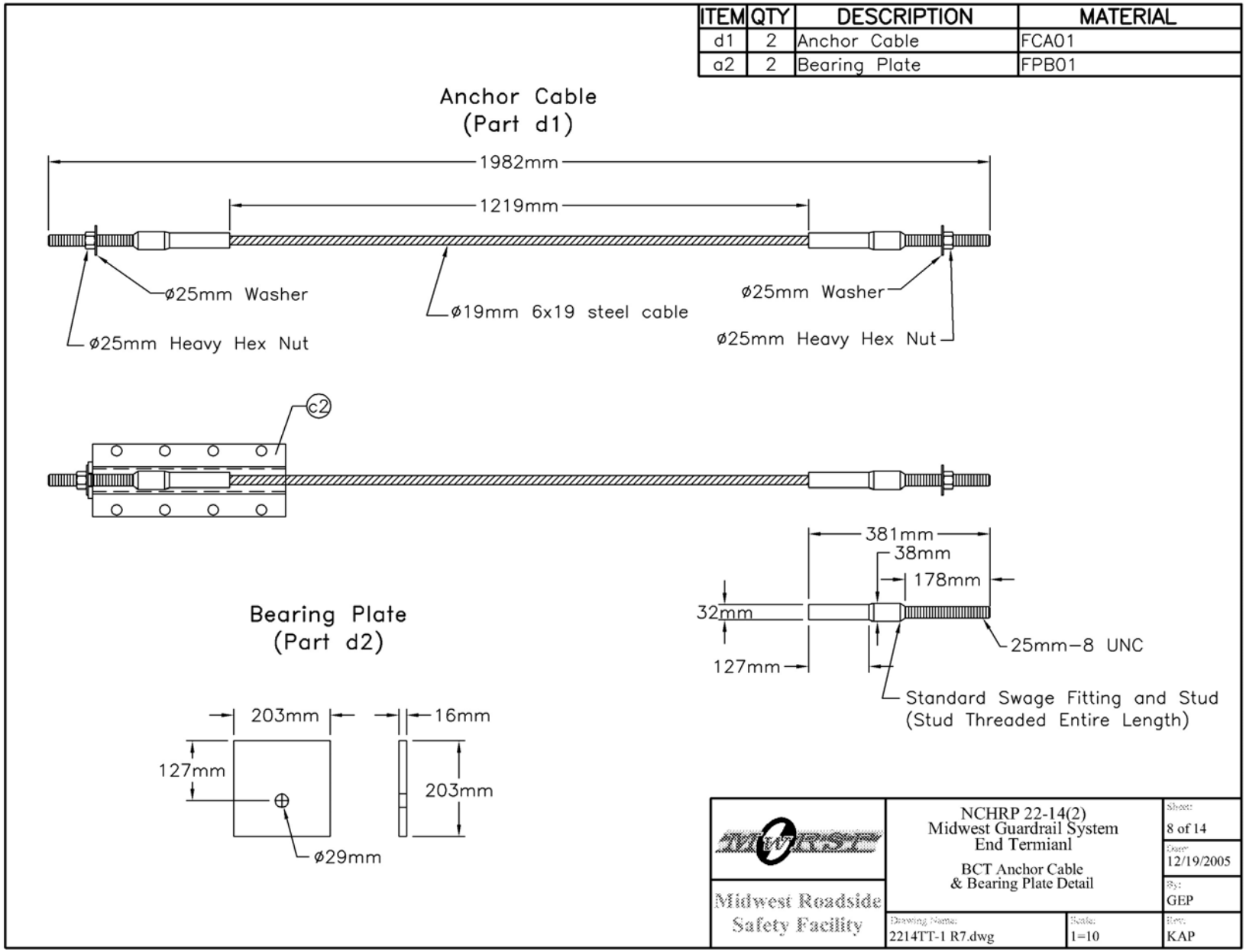

Figure 12. Midwest Guardrail System End Terminal - Anchorage Details

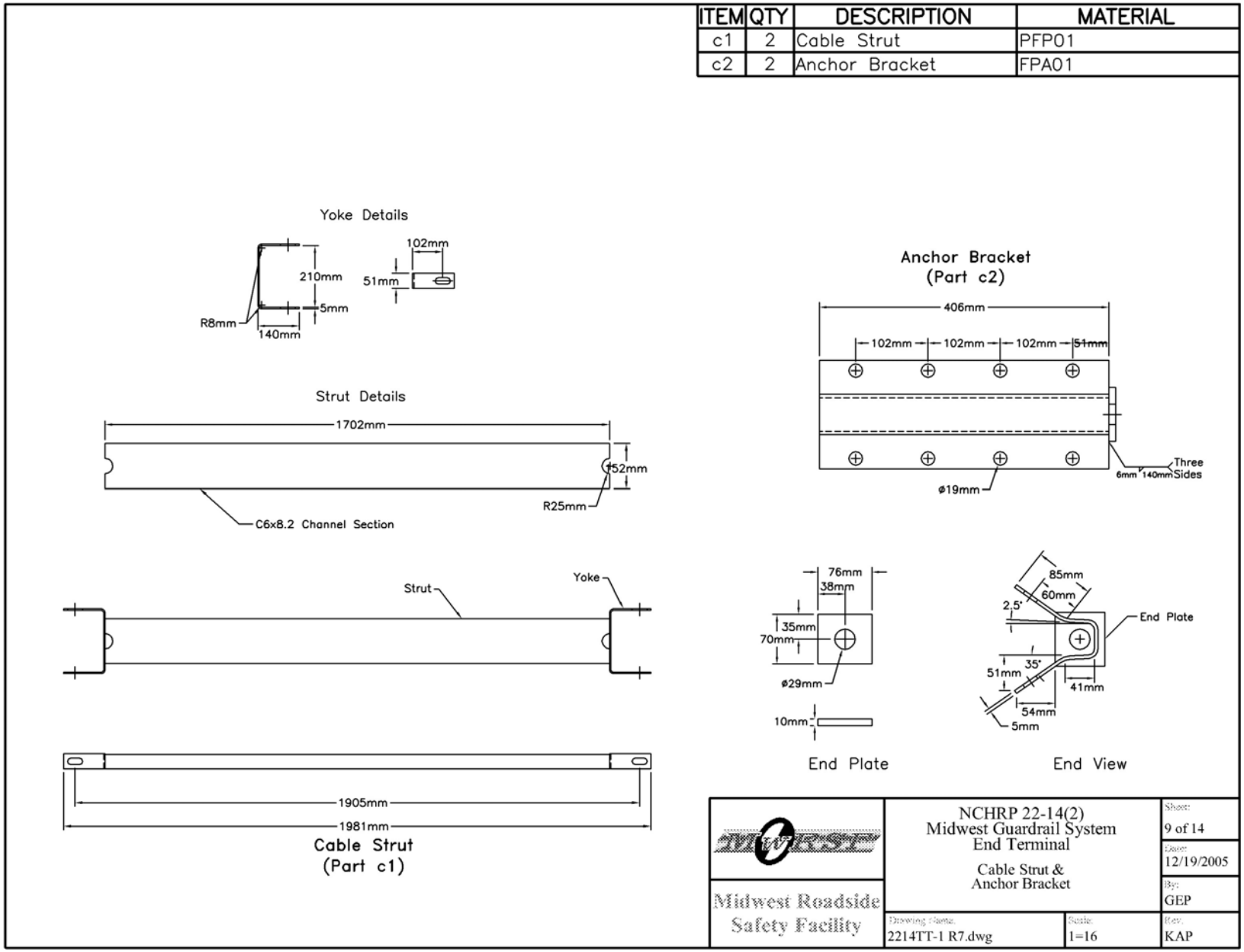

Figure 13. Midwest Guardrail System End Terminal - Anchorage Details

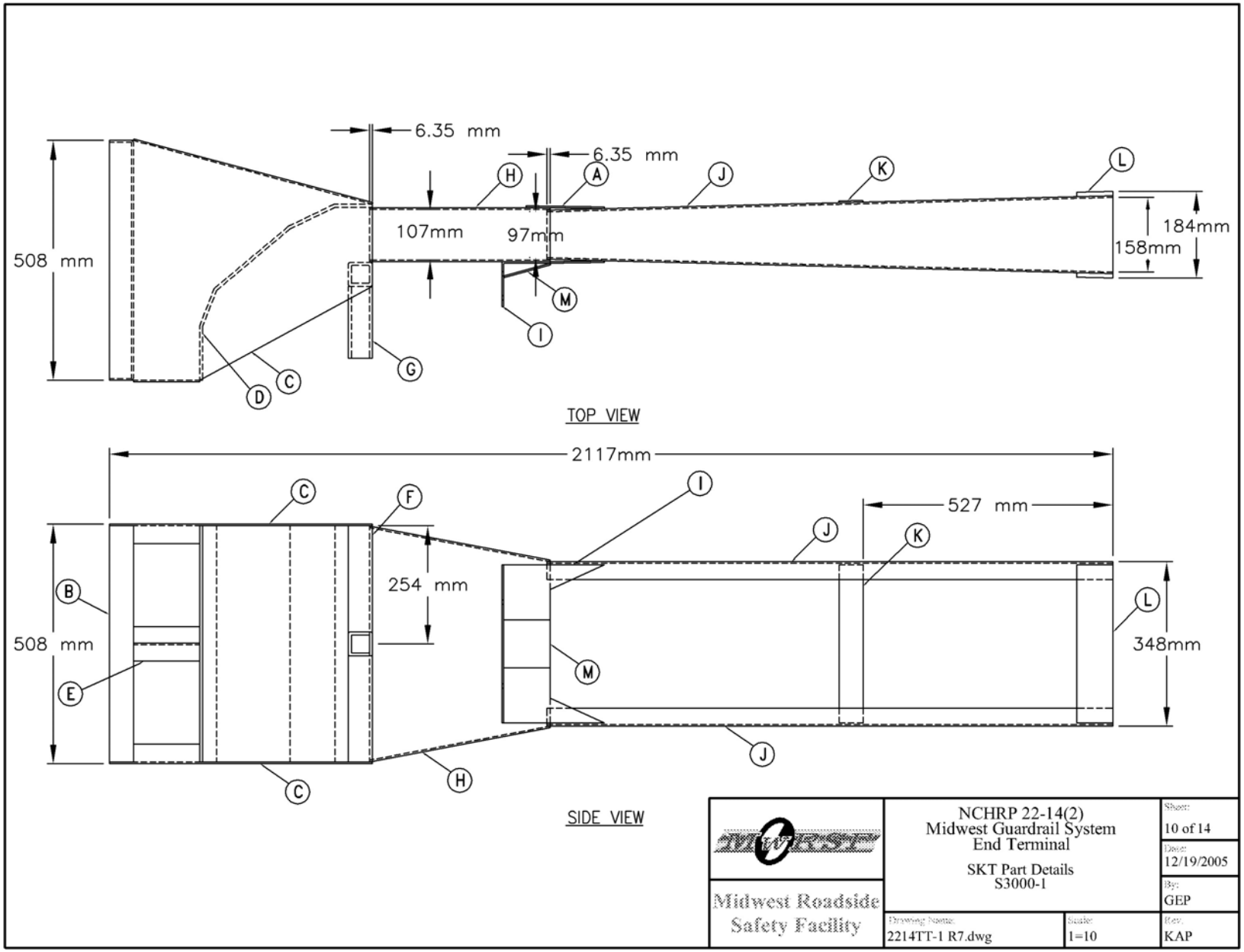

Figure 14. Midwest Guardrail System End Terminal - SKT Head Details

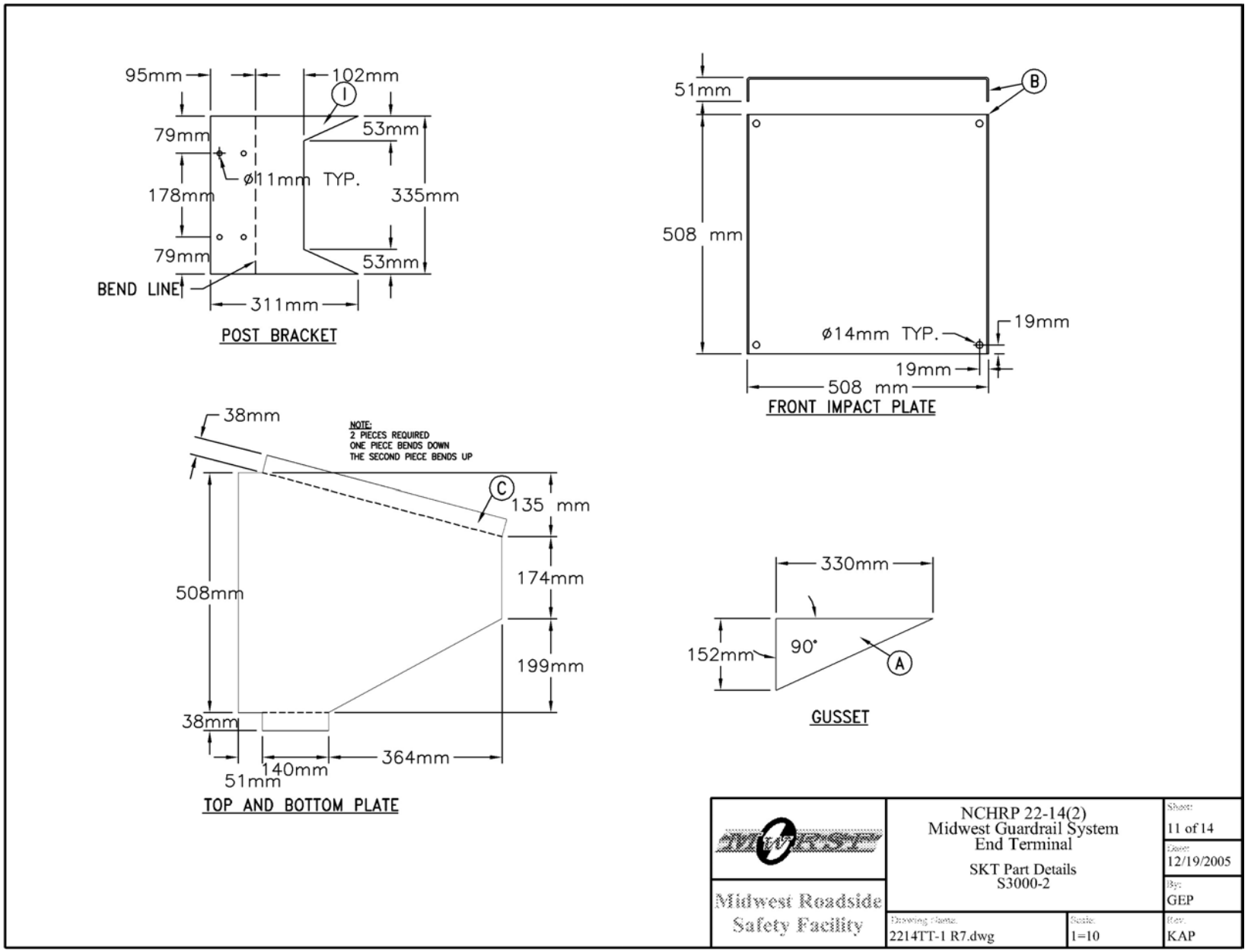

Figure 15. Midwest Guardrail System End Terminal - SKT Head Details

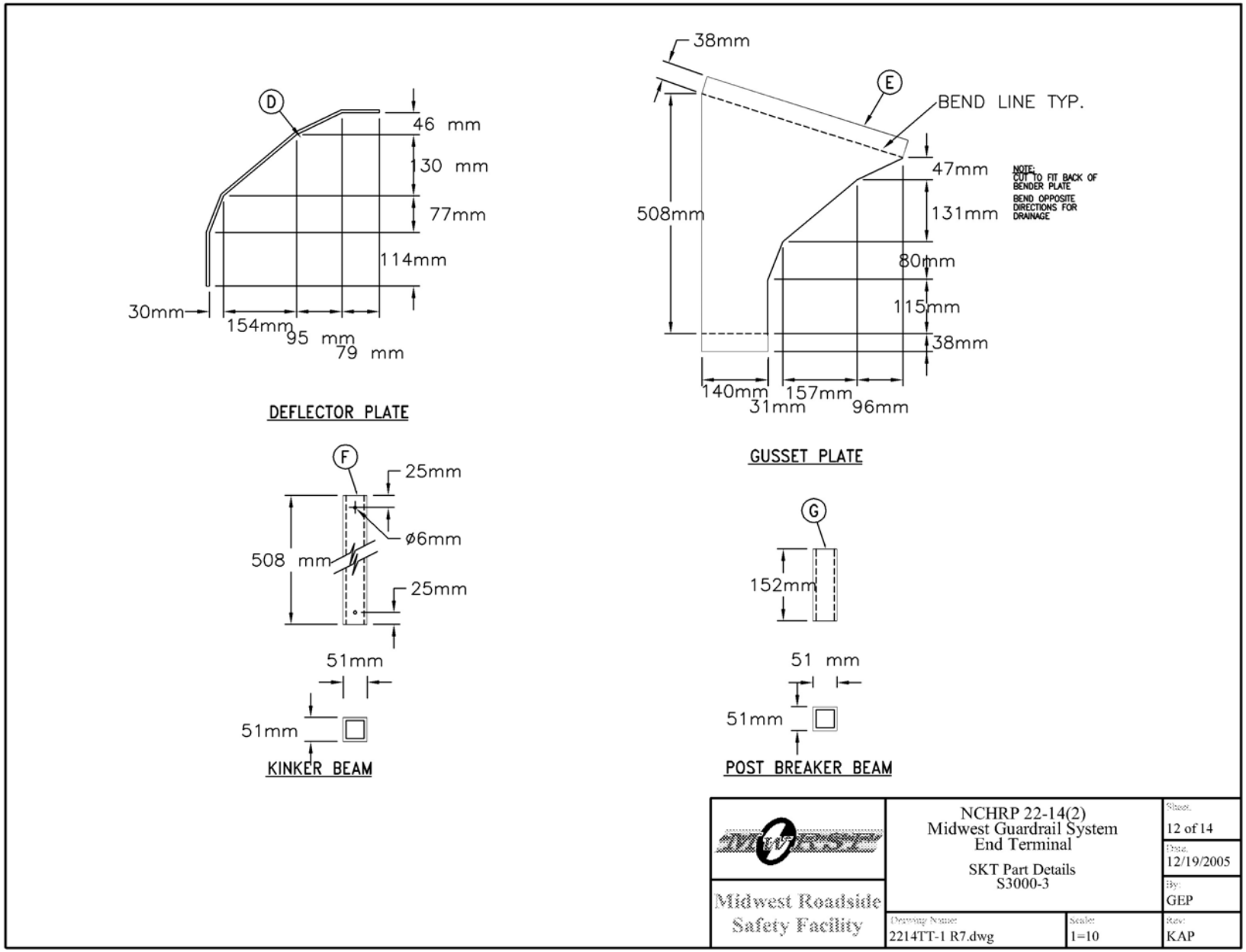

Figure 16. Midwest Guardrail System End Terminal - SKT Head Details

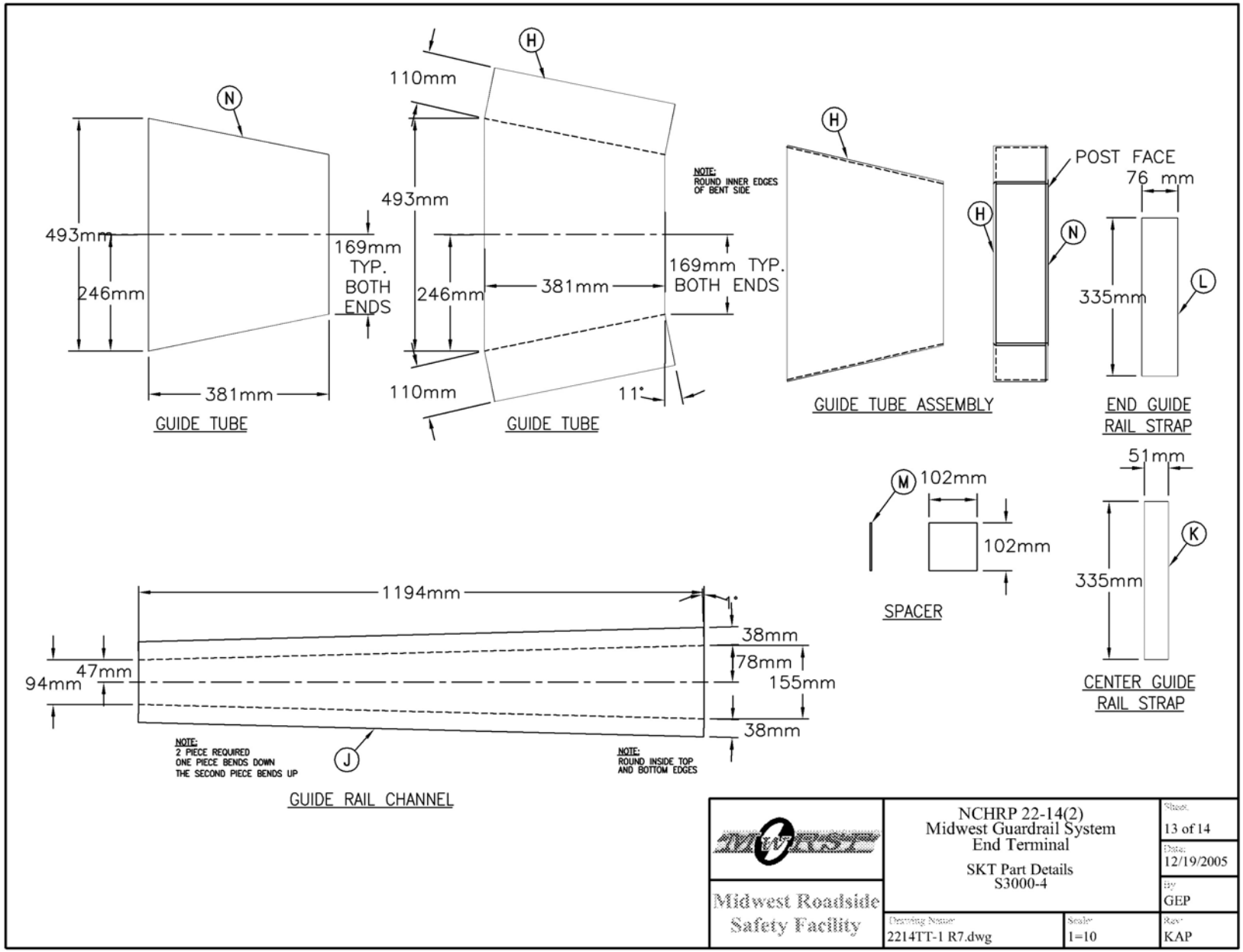

Figure 17. Midwest Guardrail System End Terminal - SKT Head Details

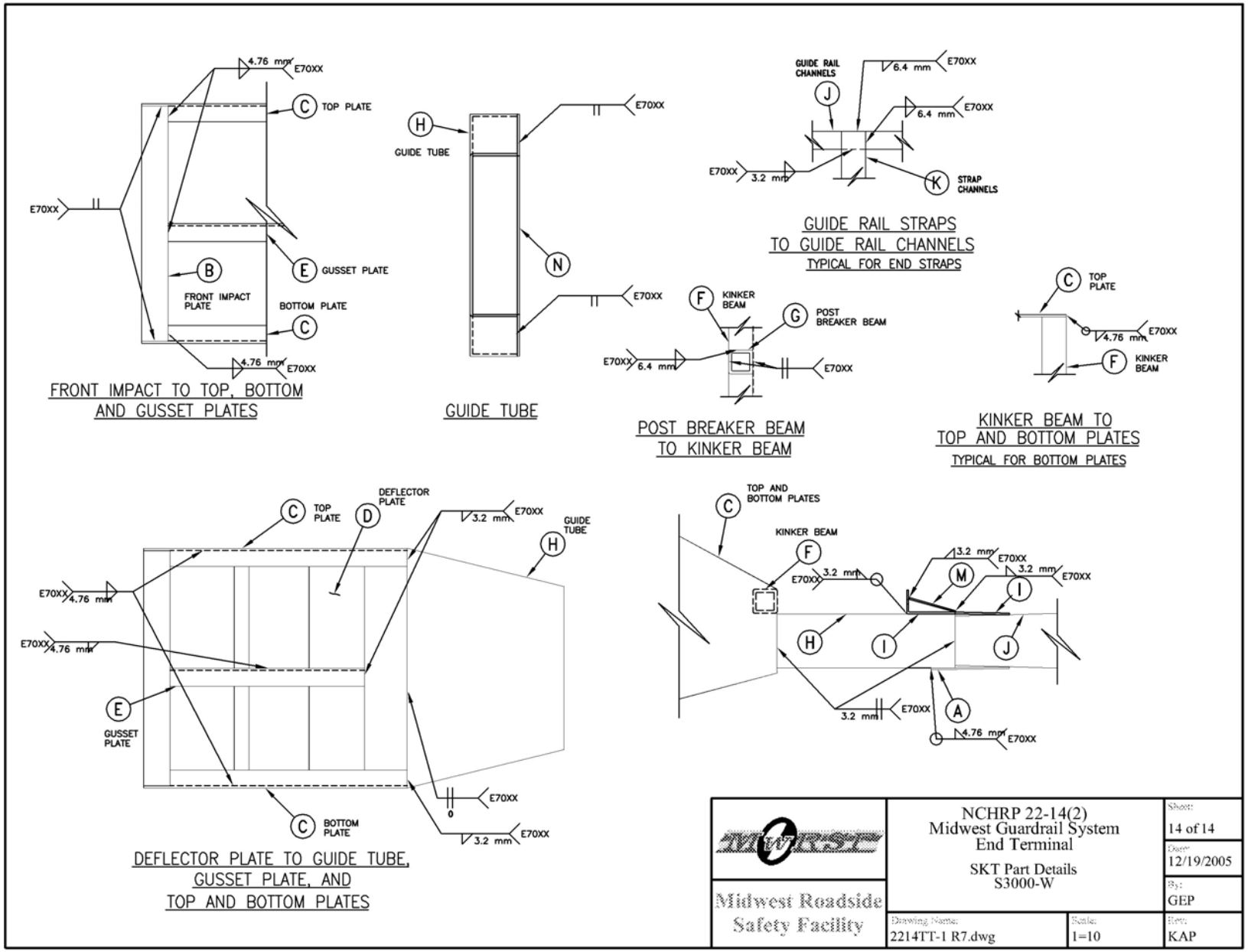

Figure 18. Midwest Guardrail System End Terminal - SKT Head Details

Figure 19. Midwest Guardrail System End Terminal

Figure 20. Midwest Guardrail System End Terminal

Figure 21. Midwest Guardrail System End Terminal

Figure 22. Midwest Guardrail System End Terminal

Figure 23. Midwest Guardrail System End Terminal

5 CRASH TEST

5.1 Test 2214TT-1

The 1,178-kg (2,596-lb) small car impacted the tangent end terminal system at a speed of 103.6 km/h (64.4 mph) and at an angle of 14.5 degrees. A summary of the test results and sequential photographs are shown in Figure 24. The summary of the test results and sequential photographs in English units are shown in Appendix B. Additional sequential photographs are shown in Figures 25 through 27. Documentary photographs of the crash test are shown in Figures 28 and 29.

5.2 Test Description

Initial vehicle impact was to occur between post nos. 1 and 2, or 734 mm (28.9 in.) downstream from the centerline of post no. 1, as shown in Figure 30. Actual vehicle impact occurred 1,013 mm (39.9 in.) downstream from the centerline of post no. 1. At 0.008 sec after impact, the left-front corner of the vehicle crushed inward toward the engine compartment. At 0.032 sec, the left-front corner of the vehicle was located at post no. 2 as the rail began to deflect. At 0.052 sec, the left-front tire contacted post no. 2. At 0.070 sec, post no. 2 fractured, and the left-front corner of the vehicle was located at the midspan between post nos. 2 and 3. At this same time, post no. 3 deflected backward, and the rail appeared to be on top of the hood. At 0.100 sec, the left-front corner of the vehicle was located at post no. 3 which continued to deflected backwards. At 0.120 sec, post no. 3 fractured. At 0.138 sec, the left-front tire contacted post no. 4. At the same time, the bottom of the left-side mirror was riding along the top of the rail while the left-front corner of the hood protruded under the rail. At 0.174 sec, the vehicle's left-front tire protruded under the rail. At 0.190 sec, post no. 4 fractured while the vehicle redirected. At 0.202 sec, the left-front tire disengaged from the vehicle. At 0.224 sec, the top of the left-side door was ajar. At 0.258 sec, the left-front corner of the

vehicle contacted post no. 5 which twisted downstream. At this same time, the vehicle continued to yaw away from the system as the front bumper encountered significant deformations. At 0.322 sec after impact, the vehicle became parallel to the system with a resultant velocity of 71.2 km/h (44.3 mph). At 0.432 sec, the vehicle exited the system at an angle of 8.8 degrees and a resultant velocity of 69.4 km/h (43.1 mph). The vehicle came to rest 77.08 m (252 ft - 11 in.) downstream from impact and 3.14 m (10 ft - 4 in.) laterally away from the traffic-side face of the guardrail system. The trajectory and final position of the small car are shown in Figures 24 and 31.

5.3 Barrier Damage

Damage to the barrier was moderate, as shown in Figures 32 through 35. Barrier damage consisted of deformed W-beam, fractured and deformed guardrail posts, and contact marks on a guardrail section. The length of vehicle contact along the W-beam guardrail system was approximately 8.4 m (27.5 ft), which spanned from 1,013 mm (39.9 in.) downstream from the centerline of post no. 1 through 1,651 mm (65 in.) downstream from the centerline of post no. 5.

Moderate deformation and flattening of the impacted section of W-beam rail occurred between post nos. 1 and 6. The guardrail buckled significantly at post no. 5 while minor buckling was found between post nos. 6 and 7. Contact marks were found on the guardrail between post nos. 1 and 6. The W-beam was pulled off of post nos. 2 through 4. The W-beam rail sustained yielding around the post bolt slots at post nos. 3 and 4. Wood post nos. 2 through 4 fractured with their blockouts remaining attached to the posts. Wood post nos. 5 and 6 rotated backward slightly but otherwise remained undamaged. Steel post no. 7 encountered slight CCW twist. The downstream end of the impact head was turned backward slightly but post no. 1 remained undamaged.

The permanent set of the barrier system is shown in Figure 32. The maximum lateral

permanent set rail deflection was 584 mm (23 in.) at the centerline of post no. 3, as measured in the field. The maximum lateral dynamic rail deflection was 703 mm (27.7 in.) at the midspan between post nos. 3 and 4, as determined from high-speed digital video analysis. The working width of the system was found to be 1,233 mm (48.5 in.).

5.4 Vehicle Damage

Exterior vehicle damage was moderate, as shown in Figures 36 through 39. Occupant compartment deformations to the left side of the floorboard were judged insufficient to cause serious injury to the vehicle occupants, as shown in Figure 39. Maximum longitudinal deflections of 89 mm (3.5 in.) were located near the left-front corner of the left-side floorboard. Maximum lateral deflections of 152 mm (6 in.) were located near the left-front corner of the left-side floorboard. Maximum vertical deflections of 57 mm (2.25 in.) were located near the left center of the left-side floorboard. Complete occupant compartment deformations and the corresponding locations are provided in Appendix C.

Damage was concentrated on the left-front corner of the vehicle. The left side of the front bumper was fractured. The front bumper was pushed back toward the engine compartment. The radiator was pushed back into the engine compartment and buckled at its midpoint. The left-front corner and rear corners of the hood encountered dents and scratches. The left-front quarter panel sheet metal was deformed, torn, and peeled back into the left-front door. The right-front quarter panel encountered minor dents and deformations behind the front tire. The left-front door encountered deformations and sheet metal tears, while the left-rear door was dented and scratched. The entire left side was dented and deformed. The left-side headlight was fractured and detached and the light assembly was shifted toward the right. The left-side door mirror was broken off, but

remained attached by the mechanism wires. The left side of the roof between the front and back doors was dented. The left-front wheel assembly deformed and crushed inward toward the engine compartment. The left-side tire bearing and ball joints were fractured. The left-side steering knuckle and left-front tire disengaged from the rest of the wheel assembly. The rear suspension was damaged. The gear box and numerous underside components were scratched and dented. The windshield encountered minor cracking at the lower-left side of the windshield. All other window glass remained undamaged.

5.5 Occupant Risk Values

The longitudinal and lateral occupant impact velocities were determined to be 5.44 m/s (17.85 ft/s) and 4.10 m/s (13.45 ft/s), respectively. The maximum 0.010-sec average occupant ridedown decelerations in the longitudinal and lateral directions were 7.53 Gs and 7.09 Gs, respectively. It is noted that the occupant impact velocities (OIVs) and occupant ridedown decelerations (ORDs) were within the suggested limits provided in NCHRP Report No. 350. The THIV and PHD values were determined to be 6.97 m/s (22.87 ft/s) and 8.41 Gs, respectively. The results of the occupant risk, as determined from the accelerometer data, are summarized in Figure 24. Results are shown graphically in Appendix D. The results from the rate transducer are shown graphically in Appendix D.

5.6 Discussion

The analysis of the test results for test no. 2214TT-1 showed that the SKT-MGS tangent end terminal system, impacted with the 1100C vehicle of the Update to NCHRP Report No. 350, adequately contained and redirected the vehicle with controlled lateral displacements of the barrier system. There were no detached elements nor fragments which showed potential for penetrating the

occupant compartment nor presented undue hazard to other traffic. Deformations of, or intrusion into, the occupant compartment that could have caused serious injury did not occur. The test vehicle did not penetrate nor ride over the barrier system and remained upright during and after the collision. Vehicle roll, pitch, and yaw angular displacements were noted, but they were deemed acceptable because they did not adversely influence occupant risk safety criteria nor cause rollover. After collision, the vehicle's trajectory revealed minimum intrusion into adjacent traffic lanes. Therefore, test no. 2214TT-1 conducted on the SKT-MGS tangent end terminal with CRT posts was determined to be acceptable according to the TL-3 safety performance criteria found in the Update to NCHRP Report No. 350.

0.000 sec | 0.100 sec | 0.220 sec | 0.342 sec | 0.432 sec

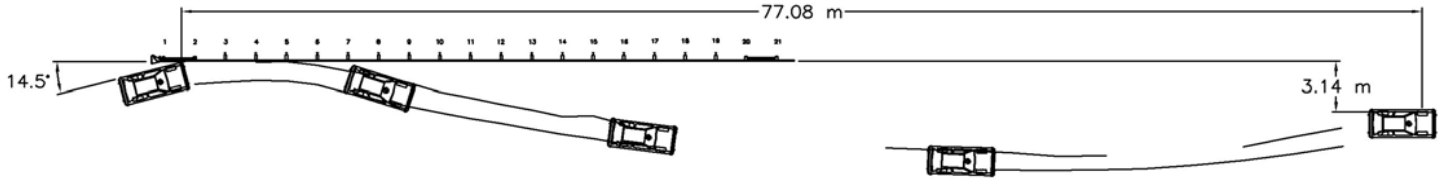

- Test Agency . . . . . MwRSF
- Test Number 2214TT-1
- Date 7/1/05
- NCHRP 350 Update Test Designation . . 3-34
- Appurtenance . . . . . SKT-MGS Tangent End Terminal
- Total Length . . . . . 39.82 m
- Key Element . . . . . SKT impact head
- Key Element - Steel W-Beam
  - Thickness . . . . . 2.66 mm
  - Top Mounting Height . . . . . 813 mm
- Key Elements - Wood Posts
  - Post Nos. 3 - 6 (CRT) . . . . . 152 mm x 203 mm by 1,829 mm long
  - Spacing . . . . . 1,905 mm
- Key Elements - Steel Posts
  - Post Nos. 7 - 19 . . . . . W152x13.4 by 1,829 mm long
- Key Elements - Wood Spacer Blocks
  - Post Nos. 3 - 19 . . . . . 152 mm x 305 mm by 362 mm long
- Type of Soil . . . . . Grading B - AASHTO M 147-65 (1990)
- Test Vehicle
  - Type/Designation 1170C
  - Make and Model . . . . . 2002 Kia Rio
  - Curb . . . . . 1,055 kg
  - Test Inertial . . . . . 1,102 kg
  - Gross Static . . . . . 1,178 kg
- Impact Conditions
  - Speed . . . . . 103.6 km/h
  - Angle . . . . . 14.5 degrees
  - Target Impact Location . . . . . 734 mm downstream centerline post no. 1
  - Actual Impact Location . . . . . 1,013 mm downstream centerline post no. 1
- Exit Conditions
  - Speed . . . . . 69.4 km/h
  - Angle . . . . . 8.8 degrees
  - Exit Box Criterion . . . . . Pass
- Post-Impact Trajectory
  - Vehicle Stability . . . . . Satisfactory
  - Stopping Distance . . . . . 77.08 m downstream
    3.14 m traffic-side face
- Occupant Impact Velocity (350 Update)
  - Longitudinal . . . . . 5.44 m/s < 12 m/s
  - Lateral . . . . . 4.10 m/s < 12 m/s
- Occupant Ridedown Deceleration (350 Update)
  - Longitudinal . . . . . 7.53 Gs < 20 Gs
  - Lateral . . . . . 7.09 Gs < 20 Gs
- THIV (not required) . . . . . 6.97 m/s
- PHD (not required) . . . . . 8.41 Gs
- Test Article Damage . . . . . Moderate
- Test Article Deflections
  - Permanent Set . . . . . 584 mm
  - Dynamic . . . . . 703 mm
  - Working Width . . . . . 1,233 mm
- Vehicle Damage . . . . . Moderate
  - VDS[4] 11-LFQ-6
  - CDC[5] 11-LYEW4
  - Maximum Deformation . . . . . 152 mm at left-front floorpan

Figure 24. Summary of Test Results and Sequential Photographs, Test 2214TT-1

0.000 sec

0.000 sec

0.134 sec

0.138 sec

0.218 sec

0.216 sec

0.432 sec

0.408 sec

0.758 sec

0.644 sec

Figure 25. Additional Sequential Photographs, Test 2214TT-1

0.000 sec

0.126 sec

0.062 sec

0.174 sec

0.142 sec

0.224 sec

0.196 sec

0.254 sec

0.284 sec

0.324 sec

Figure 26. Additional Sequential Photographs, Test 2214TT-1

0.000 sec

0.000 sec

0.234 sec

0.234 sec

0.334 sec

0.501 sec

0.400 sec

0.767 sec

0.667 sec

1.635 sec

Figure 27. Additional Sequential Photographs, Test 2214TT-1

Figure 28. Documentary Photographs, Test 2214TT-1

Figure 29. Documentary Photographs, Test 2214TT-1

Figure 30. Impact Location, Test 2214TT-1

Figure 31. Vehicle Final Position and Trajectory Marks, Test 2214TT-1

Figure 32. Midwest Guardrail System End Terminal Damage, Test 2214TT-1

Figure 33. Midwest Guardrail System End Terminal Damage, Test 2214TT-1

Figure 34. Midwest Guardrail System End Terminal Damage, Test 2214TT-1

Figure 35. Midwest Guardrail System End Terminal Damage, Test 2214TT-1

Figure 36. Vehicle Damage, Test 2214TT-1

Figure 37. Vehicle Damage, Test 2214TT-1

Figure 38. Vehicle Undercarriage Damage, Test 2214TT-1

Figure 39. Occupant Compartment Damage, Test 2214TT-1

6 SUMMARY AND CONCLUSIONS

The SKT-MGS tangent end terminal with CRT posts was constructed at the maximum height tolerance and full-scale vehicle crash tested. One full-scale vehicle crash test, using a small car vehicle, was performed on the end terminal system and was determined to be acceptable according to the TL-3 safety performance criteria for test designation 3-34 presented in the Update to NCHRP Report No. 350. A summary of the safety performance evaluation is provided in Table 3.

Table 3. Summary of Safety Performance Evaluation Results

Evaluation Factors	Evaluation Criteria		Test 2214TT-1
Structural Adequacy	A.	Test article should contain and redirect the vehicle or bring the vehicle to a controlled stop; the vehicle should not penetrate, underride, or override the installation although controlled lateral deflection of the test article is acceptable.	S
	C.	Acceptable test article performance may be by redirection, controlled penetration, or controlled stopping of the vehicle.	S
Occupant Risk	D.	Detached elements, fragments or other debris from the test article should not penetrate or show potential for penetrating the occupant compartment, or present an undue hazard to other traffic, pedestrians, or personnel in a work zone. Deformations of, or intrusions into, the occupant compartment should not exceed limits set forth in Section 5.3 and Appendix E of the Update to NCHRP Report No. 350.	S
	F.	The vehicle should remain upright during and after collision.	S
	H.	Longitudinal and lateral occupant impact velocities should fall below the preferred value of 9.0 m/s (29.5 ft/s), or at least below the maximum allowable value of 12.0 m/s (39.4 ft/s).	S
	I.	Longitudinal and lateral occupant ridedown accelerations should fall below the preferred value of 15 Gs, or at least below the maximum allowable value of 20.0 Gs.	S
Vehicle Trajectory	N.	Vehicle trajectory behind the test article is acceptable.	S

S - Satisfactory
M - Marginal
U - Unsatisfactory
NA - Not Available

7 REFERENCES

1. Ross, H.E., Sicking, D.L., Zimmer, R.A., and Michie, J.D., *Recommended Procedures for the Safety Performance Evaluation of Highway Features*, National Cooperative Research Program (NCHRP) Report No. 350, Transportation Research Board, Washington, D.C., 1993.

2. Sicking, D.L., Mak, K.K., and Rohde, J.R. Rohde, *NCHRP Report No. 350 Update - Chapters 1 through 7, Draft Report*, Presented to the Transportation Research Board, Prepared by the Midwest Roadside Safety Facility, University of Nebraska-Lincoln, July 2005 [Privileged Document].

3. Hinch, J., Yang, T.L., and Owings, R., *Guidance Systems for Vehicle Testing*, ENSCO, Inc., Springfield, VA, 1986.

4. *Vehicle Damage Scale for Traffic Investigators*, Second Edition, Technical Bulletin No. 1, Traffic Accident Data (TAD) Project, National Safety Council, Chicago, Illinois, 1971.

5. *Collision Deformation Classification - Recommended Practice J224 March 1980*, Handbook Volume 4, Society of Automotive Engineers (SAE), Warrendale, Pennsylvania, 1985.

8 APPENDICES

APPENDIX A

English-Unit System Drawings

Figure A-1. Layout of Midwest Guardrail System End Terminal Design (English)

Figure A-2. Midwest Guardrail System End Terminal - SKT Details (English)

Figure A-3. Midwest Guardrail System End Terminal - End Rail Details (English)

Figure A-4. Midwest Guardrail System End Terminal - Rail Details (English)

Figure A-5. Midwest Guardrail System End Terminal - Post Details (English)

Figure A-6. Midwest Guardrail System End Terminal - Post Details (English)

Figure A-7. Midwest Guardrail System End Terminal - Post Details (English)

Figure A-8. Midwest Guardrail System End Terminal - Anchorage Details (English)

Figure A-9. Midwest Guardrail System End Terminal - Anchorage Details (English)

Figure A-10. Midwest Guardrail System End Terminal - SKT Head Details (English)

Figure A-11. Midwest Guardrail System End Terminal - SKT Head Details (English)

Figure A-12. Midwest Guardrail System End Terminal - SKT Head Details (English)

Figure A-13. Midwest Guardrail System End Terminal - SKT Head Details (English)

Figure A-14. Midwest Guardrail System End Terminal - SKT Head Details (English)

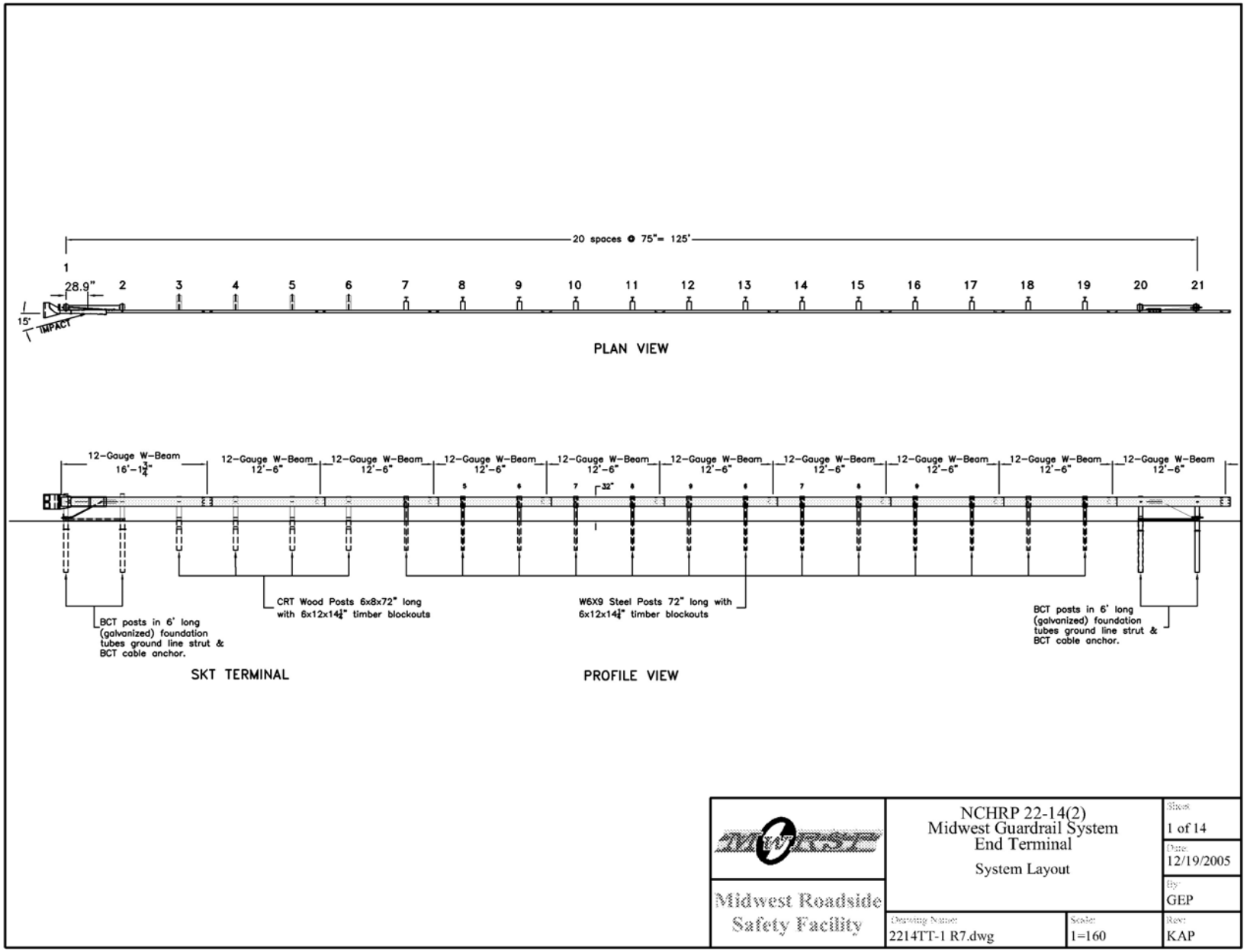

Figure A-1. Layout of Midwest Guardrail System End Terminal Design (English)

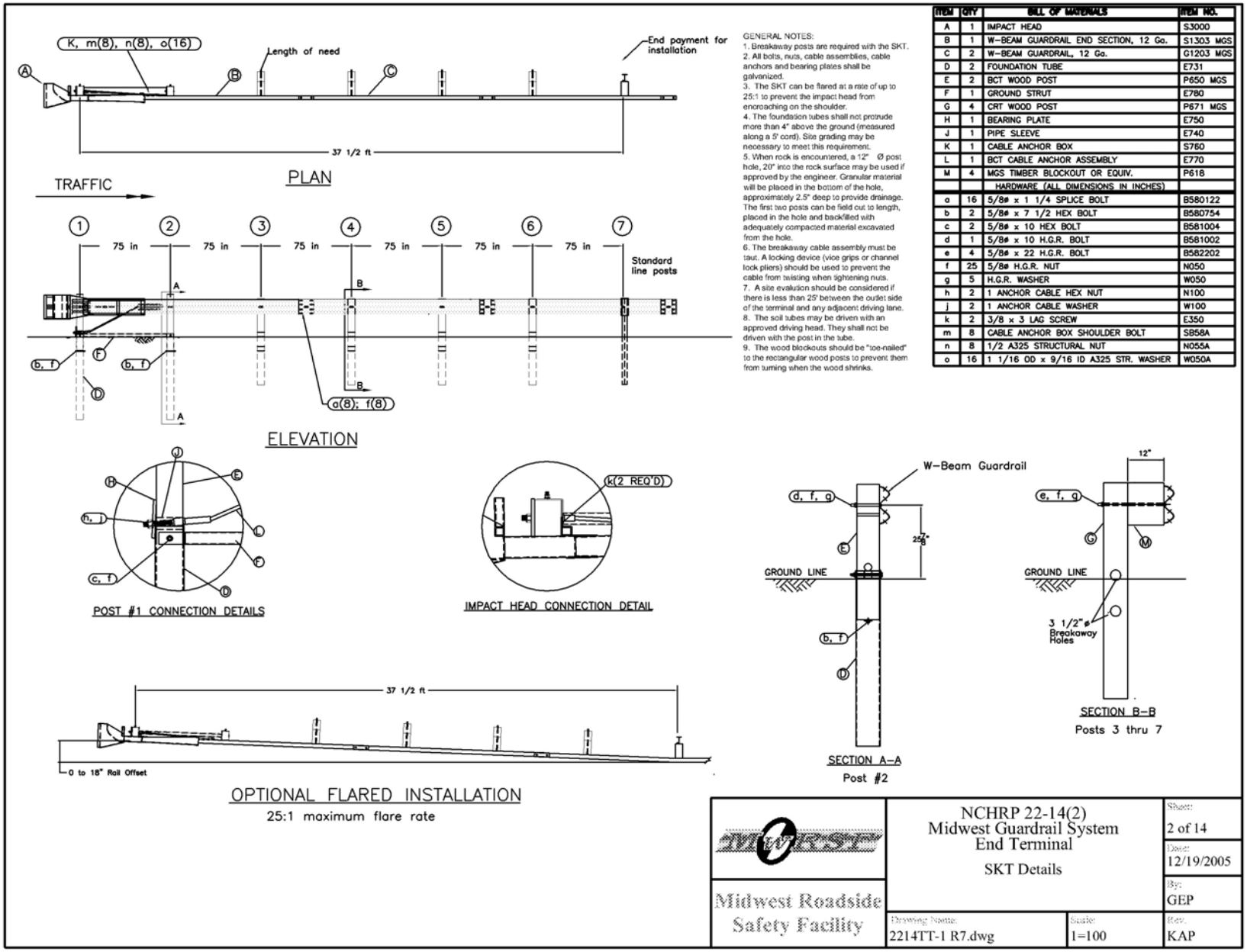

GENERAL NOTES:

1. Breakaway posts are required with the SKT.
2. All bolts, nuts, cable assemblies, cable anchors and bearing plates shall be galvanized.
3. The SKT can be flared at a rate of up to 25:1 to prevent the impact head from encroaching on the shoulder.
4. The foundation tubes shall not protrude more than 4" above the ground (measured along a 5' cord). Site grading may be necessary to meet this requirement.
5. When rock is encountered, a 12" Ø post hole, 20" into the rock surface may be used if approved by the engineer. Granular material will be placed in the bottom of the hole, approximately 2.5" deep to provide drainage. The first two posts can be field cut to length, placed in the hole and backfilled with adequately compacted material excavated from the hole.
6. The breakaway cable assembly must be taut. A locking device (vice grips or channel lock pliers) should be used to prevent the cable from twisting when tightening nuts.
7. A site evaluation should be considered if there is less than 25' between the outlet side of the terminal and any adjacent driving lane.
8. The soil tubes may be driven with an approved driving head. They shall not be driven with the post in the tube.
9. The wood blockouts should be "toe-nailed" to the rectangular wood posts to prevent them from turning when the wood shrinks.

ITEM	QTY	BILL OF MATERIALS	ITEM NO.
A	1	IMPACT HEAD	S3000
B	1	W-BEAM GUARDRAIL END SECTION, 12 Ga.	S1303 MGS
C	2	W-BEAM GUARDRAIL, 12 Ga.	G1203 MGS
D	2	FOUNDATION TUBE	E731
E	2	BCT WOOD POST	P650 MGS
F	1	GROUND STRUT	E780
G	4	CRT WOOD POST	P671 MGS
H	1	BEARING PLATE	E750
J	1	PIPE SLEEVE	E740
K	1	CABLE ANCHOR BOX	S760
L	1	BCT CABLE ANCHOR ASSEMBLY	E770
M	4	MGS TIMBER BLOCKOUT OR EQUIV.	P618
		HARDWARE (ALL DIMENSIONS IN INCHES)	
a	16	5/8ø x 1 1/4 SPLICE BOLT	B580122
b	2	5/8ø x 7 1/2 HEX BOLT	B580754
c	2	5/8ø x 10 HEX BOLT	B581004
d	1	5/8ø x 10 H.G.R. BOLT	B581002
e	4	5/8ø x 22 H.G.R. BOLT	B582202
f	25	5/8ø H.G.R. NUT	N050
g	5	H.G.R. WASHER	W050
h	2	1 ANCHOR CABLE HEX NUT	N100
j	2	1 ANCHOR CABLE WASHER	W100
k	2	3/8 x 3 LAG SCREW	E350
m	8	CABLE ANCHOR BOX SHOULDER BOLT	SB58A
n	8	1/2 A325 STRUCTURAL NUT	N055A
o	16	1 1/16 OD x 9/16 ID A325 STR. WASHER	W050A

Figure A-2. Midwest Guardrail System End Terminal - SKT Details (English)

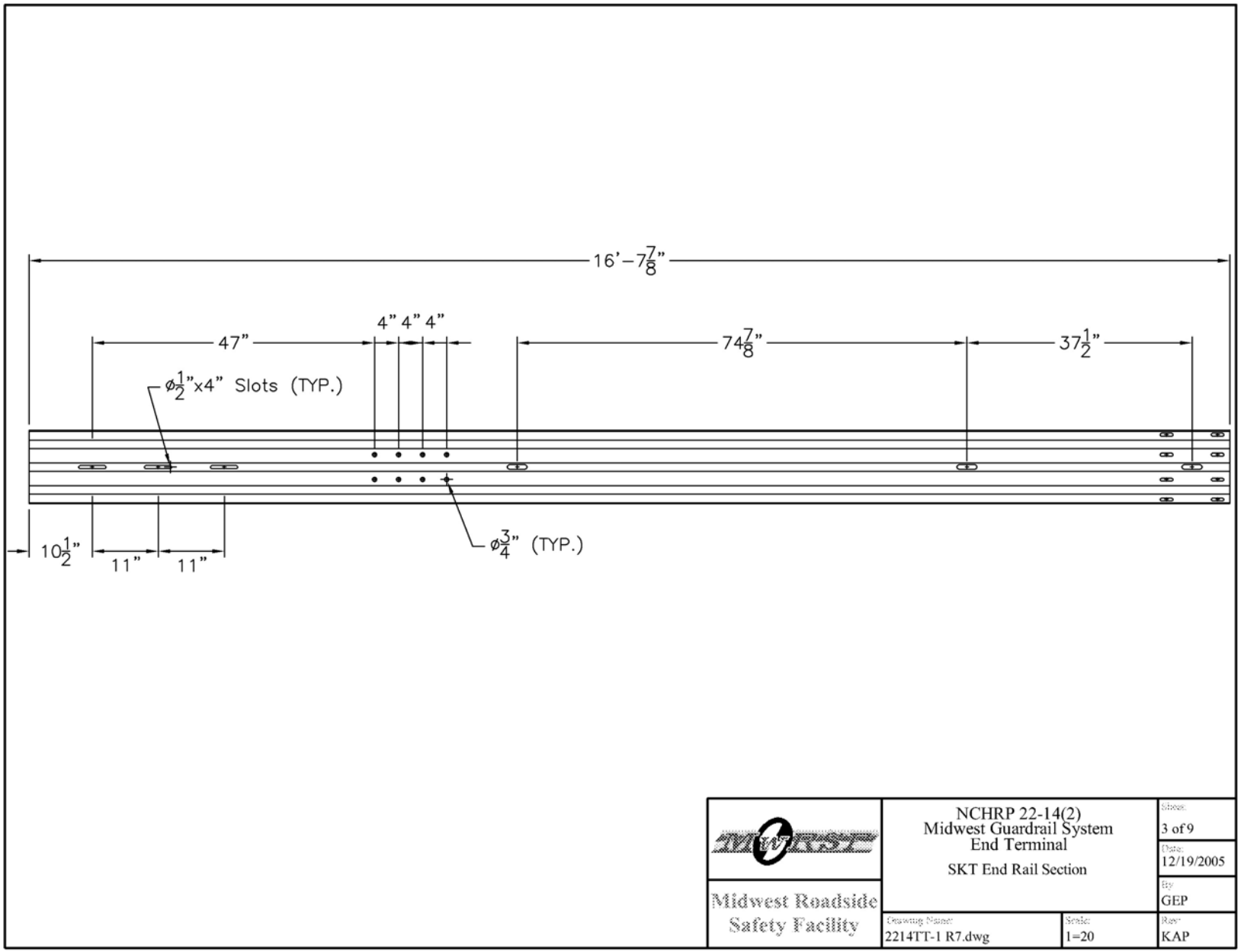

Figure A-3. Midwest Guardrail System End Terminal - SKT End Rail Details (English)

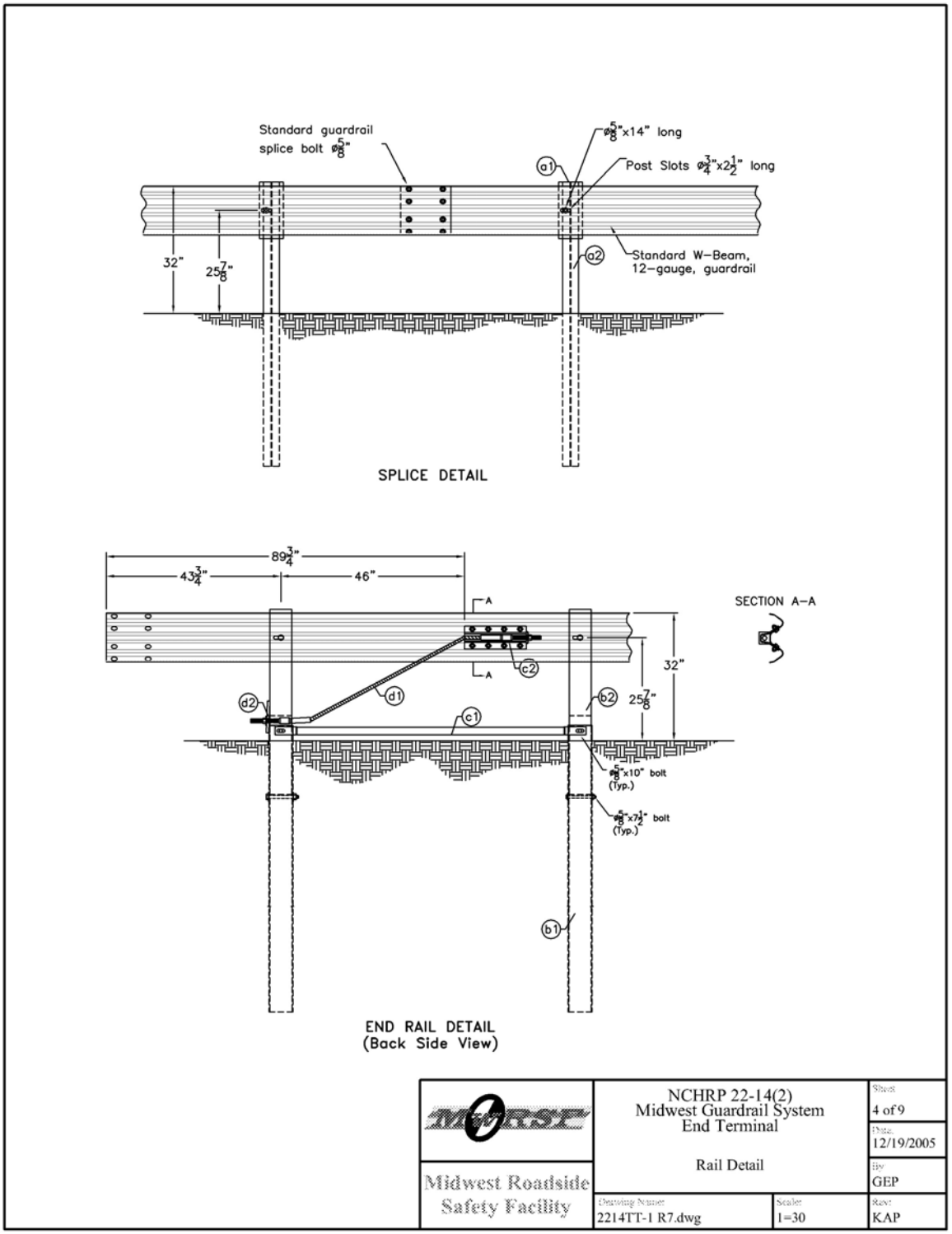

Figure A-4. Midwest Guardrail System End Terminal - Rail Details (English)

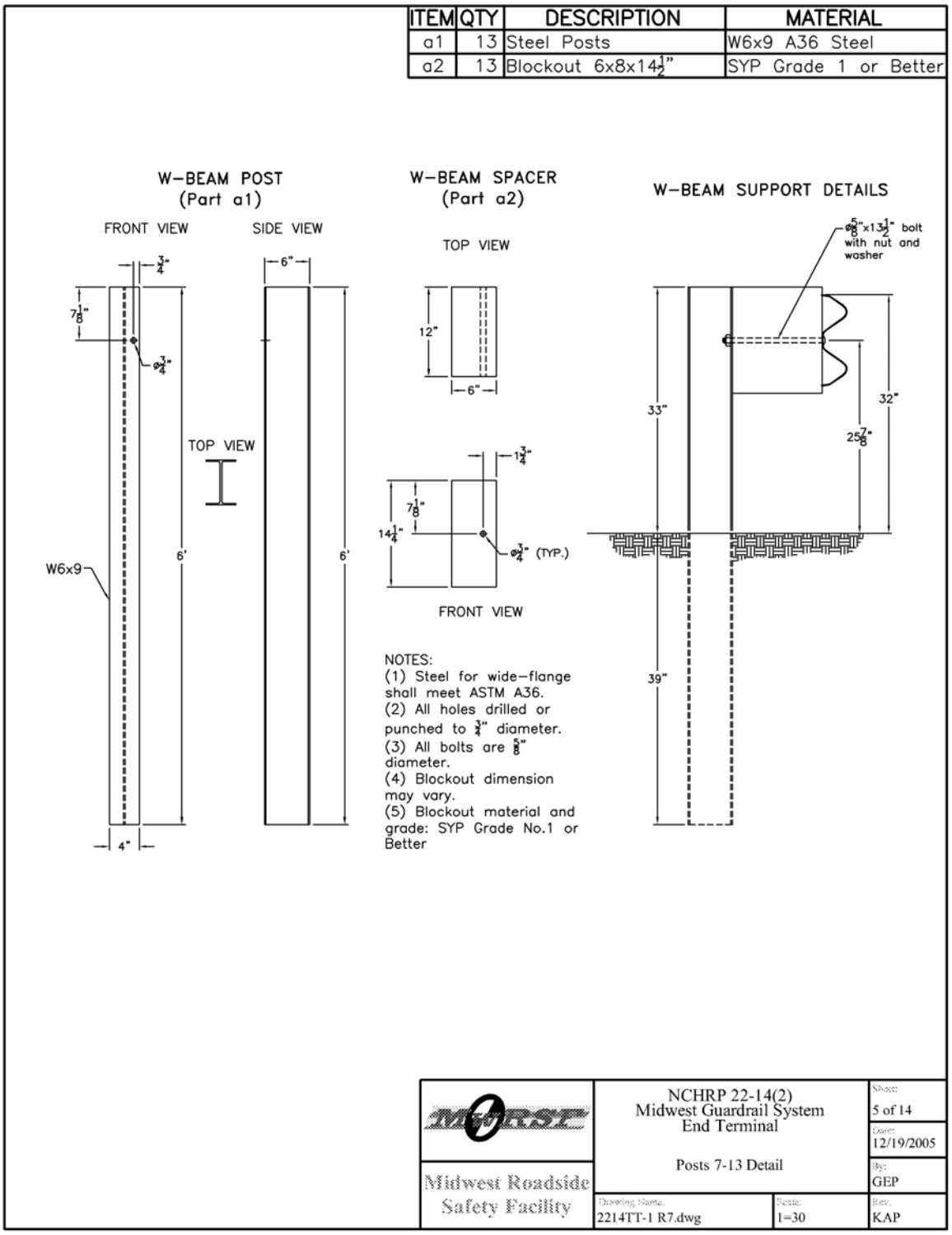

Figure A-5. Midwest Guardrail System End Terminal - Post Details (English)

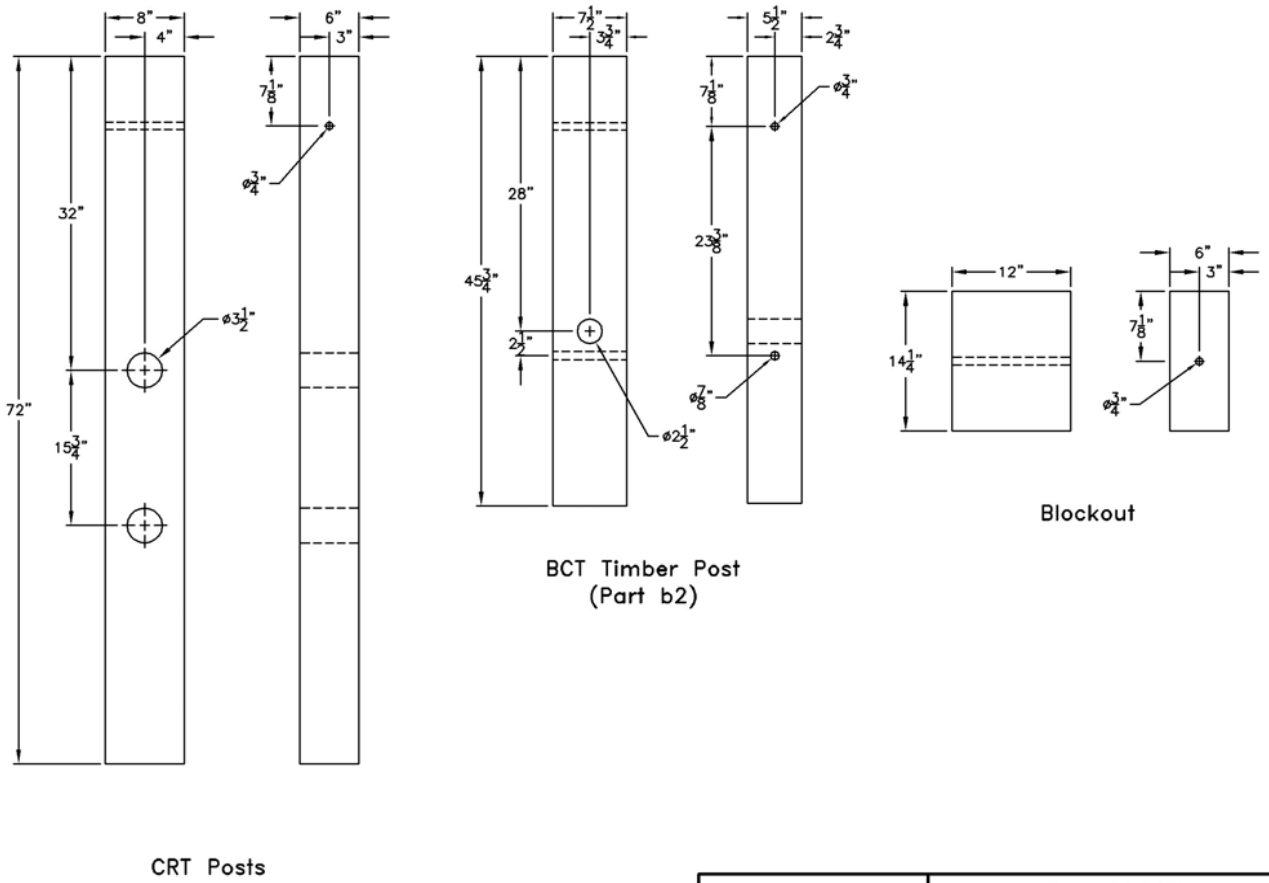

MwRSF Midwest Roadside Safety Facility	NCHRP 22-14(2) Midwest Guardrail System End Terminal BCT & CRT Post Details	Sheet: 6 of 14 Date: 12/19/2005 By: GEP
	Drawing Name: 2214TT-1 R7.dwg / Scale: 1=16	Rev: KAP

Figure A-6. Midwest Guardrail System End Terminal - Post Details (English)

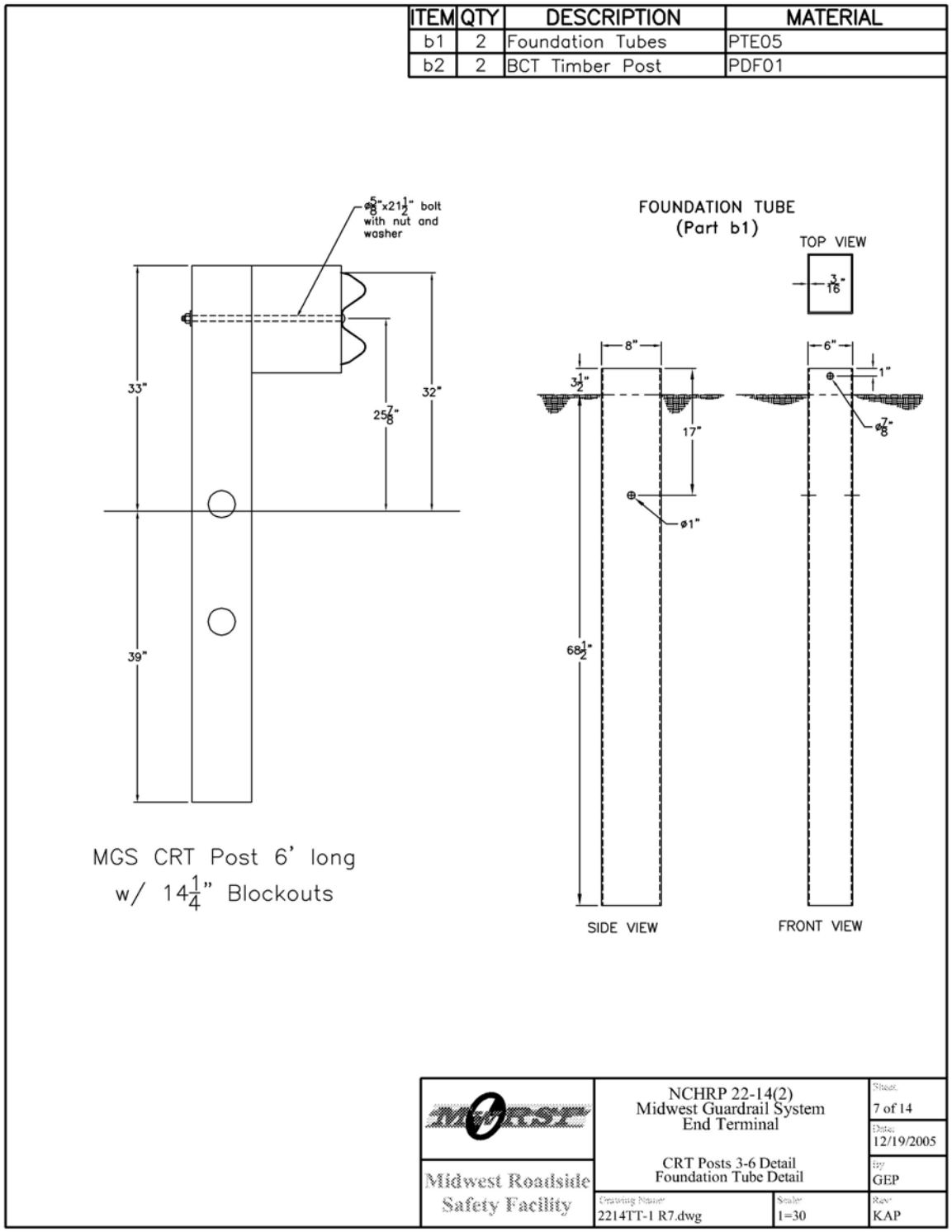

Figure A-7. Midwest Guardrail System End Terminal - Post Details (English)

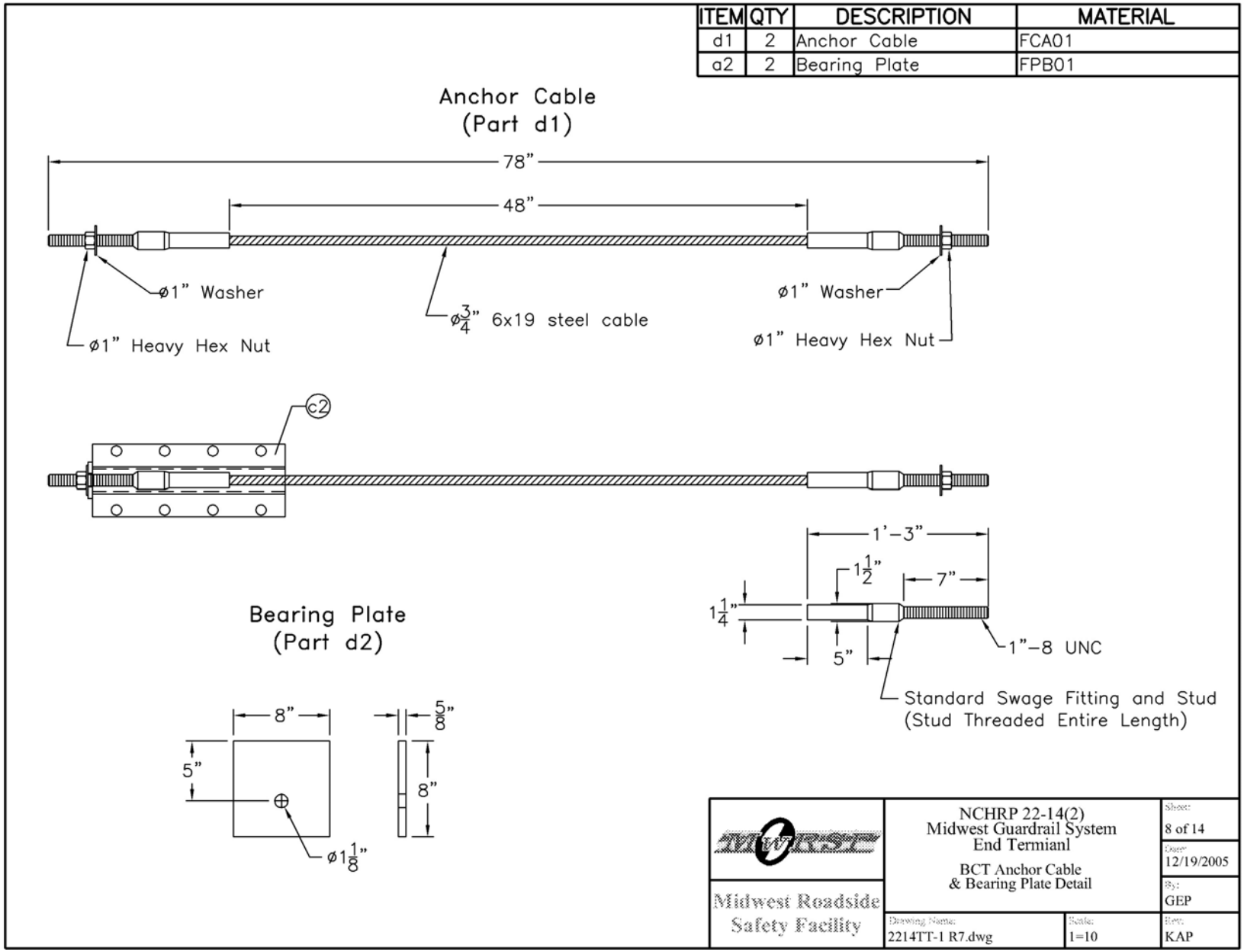

Figure A-8. Midwest Guardrail System End Terminal - Anchorage Details (English)

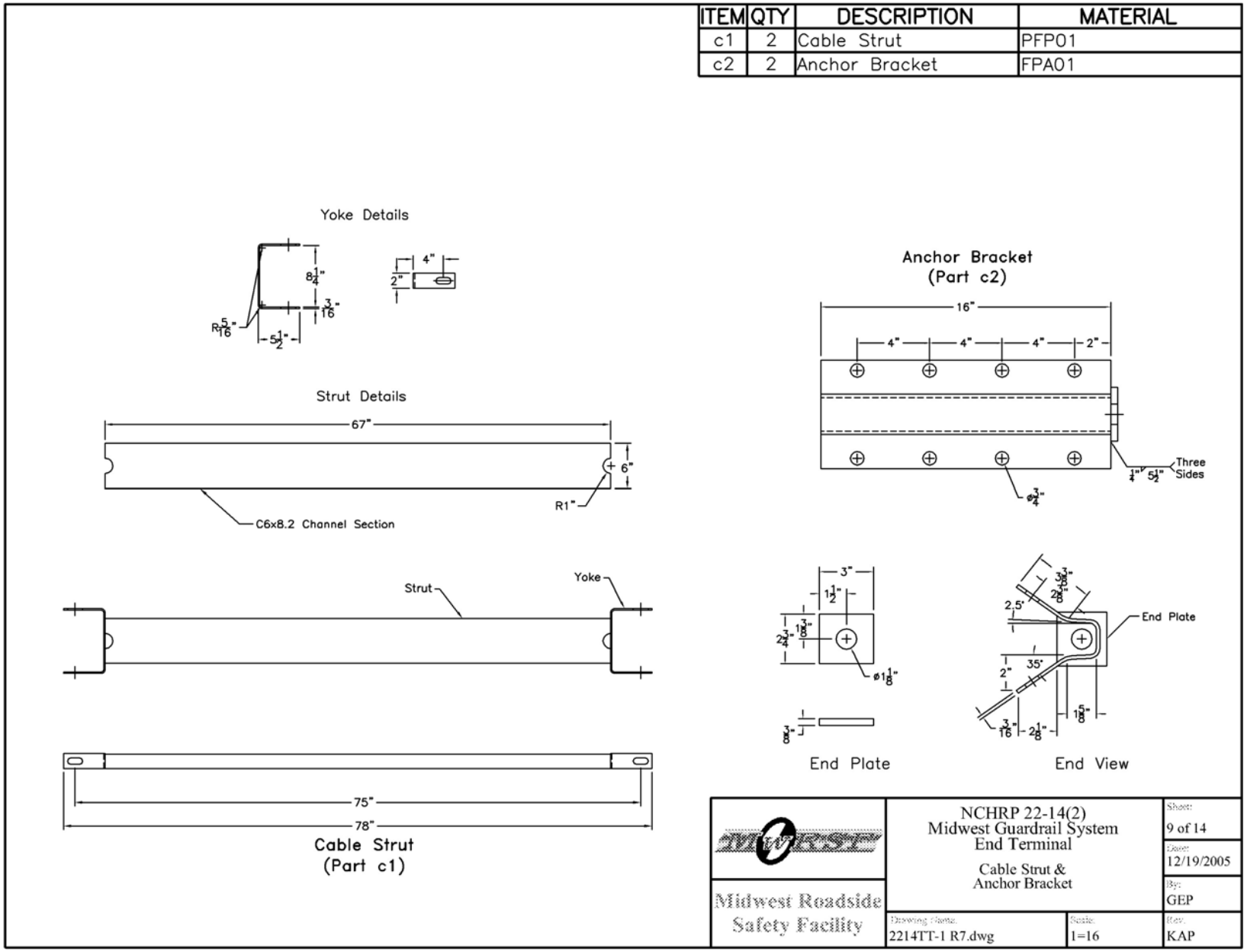

Figure A-9. Midwest Guardrail System End Terminal - Anchorage Details (English)

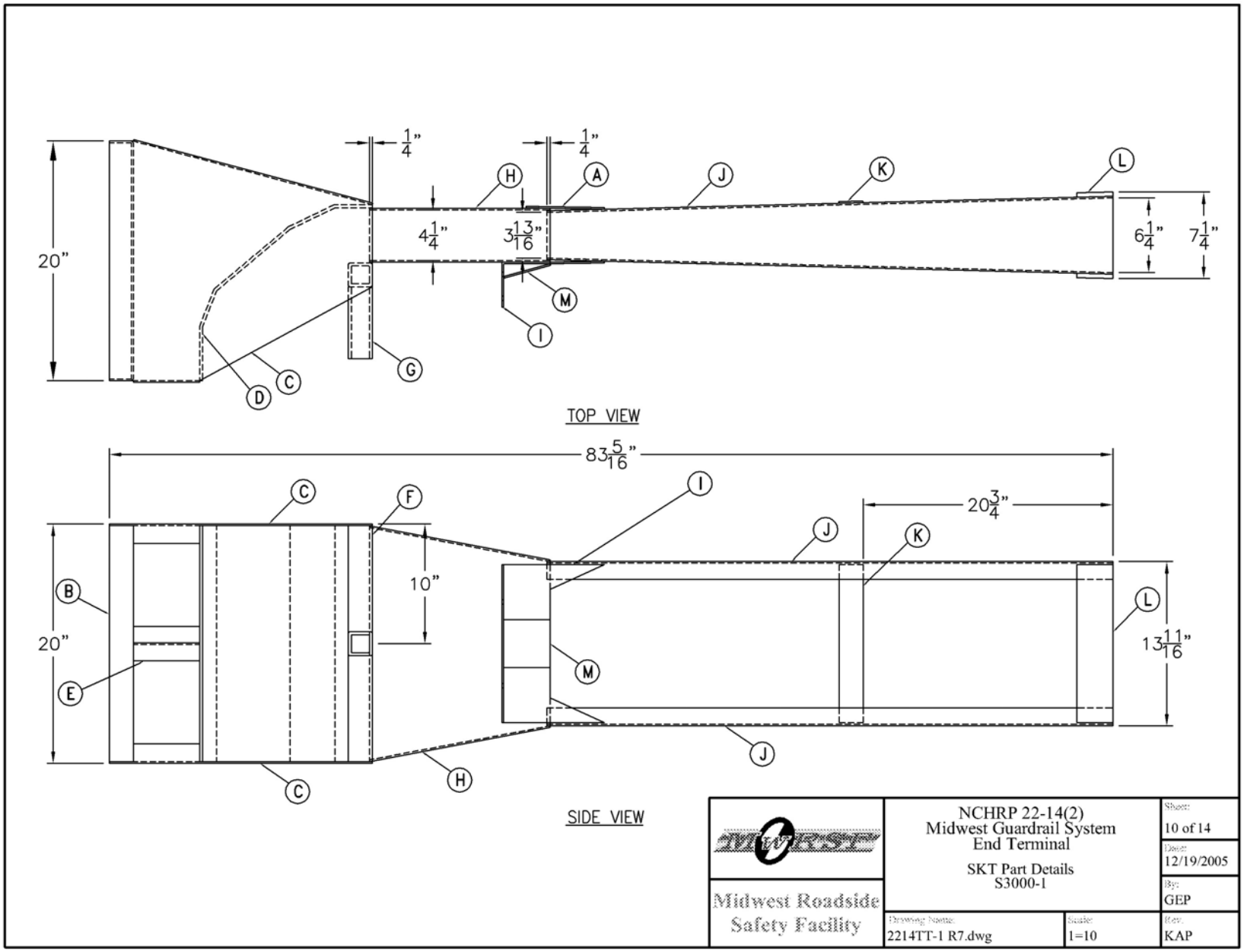

Figure A-10. Midwest Guardrail System End Terminal - SKT Head Details (English)

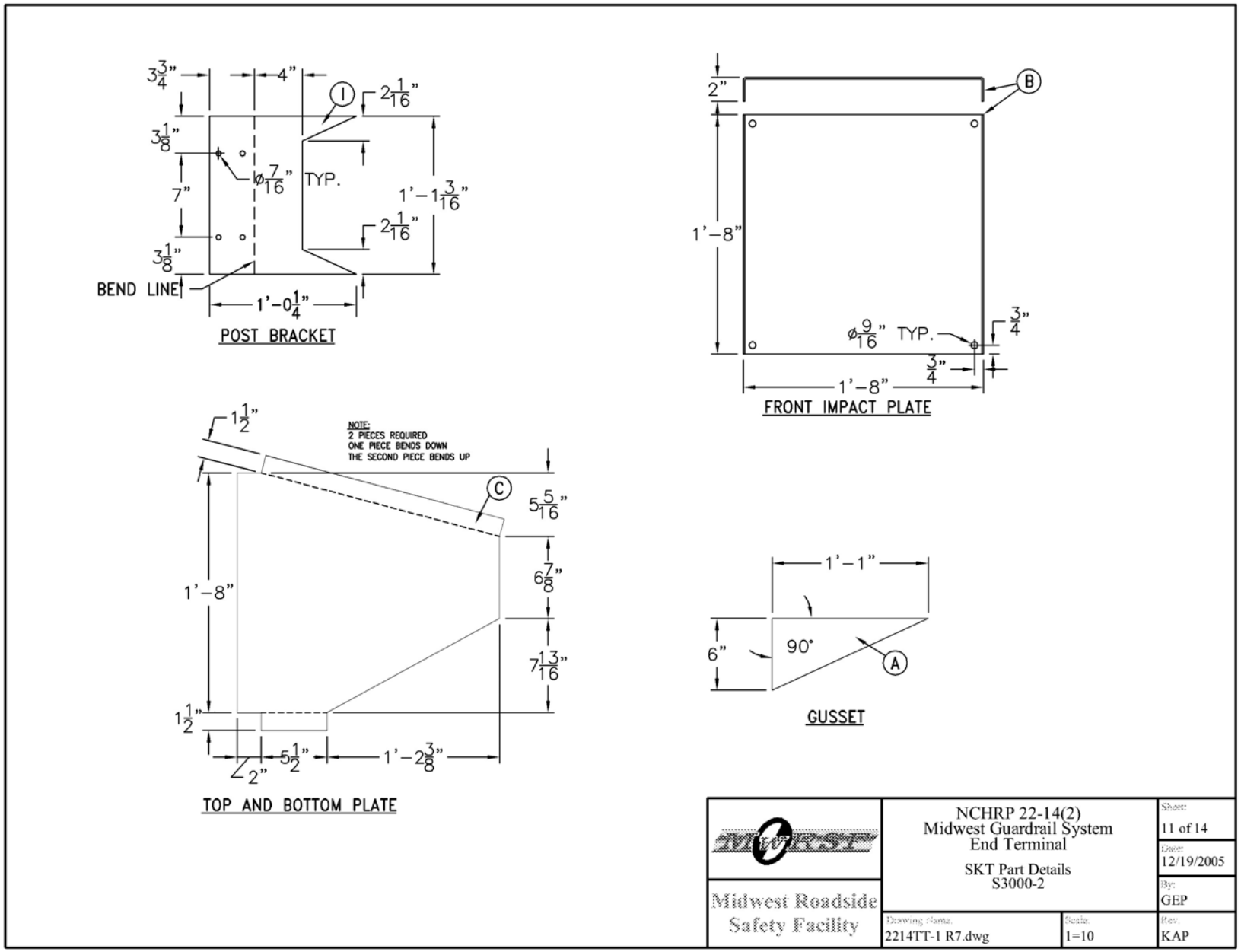

Figure A-11. Midwest Guardrail System End Terminal - SKT Head Details (English)

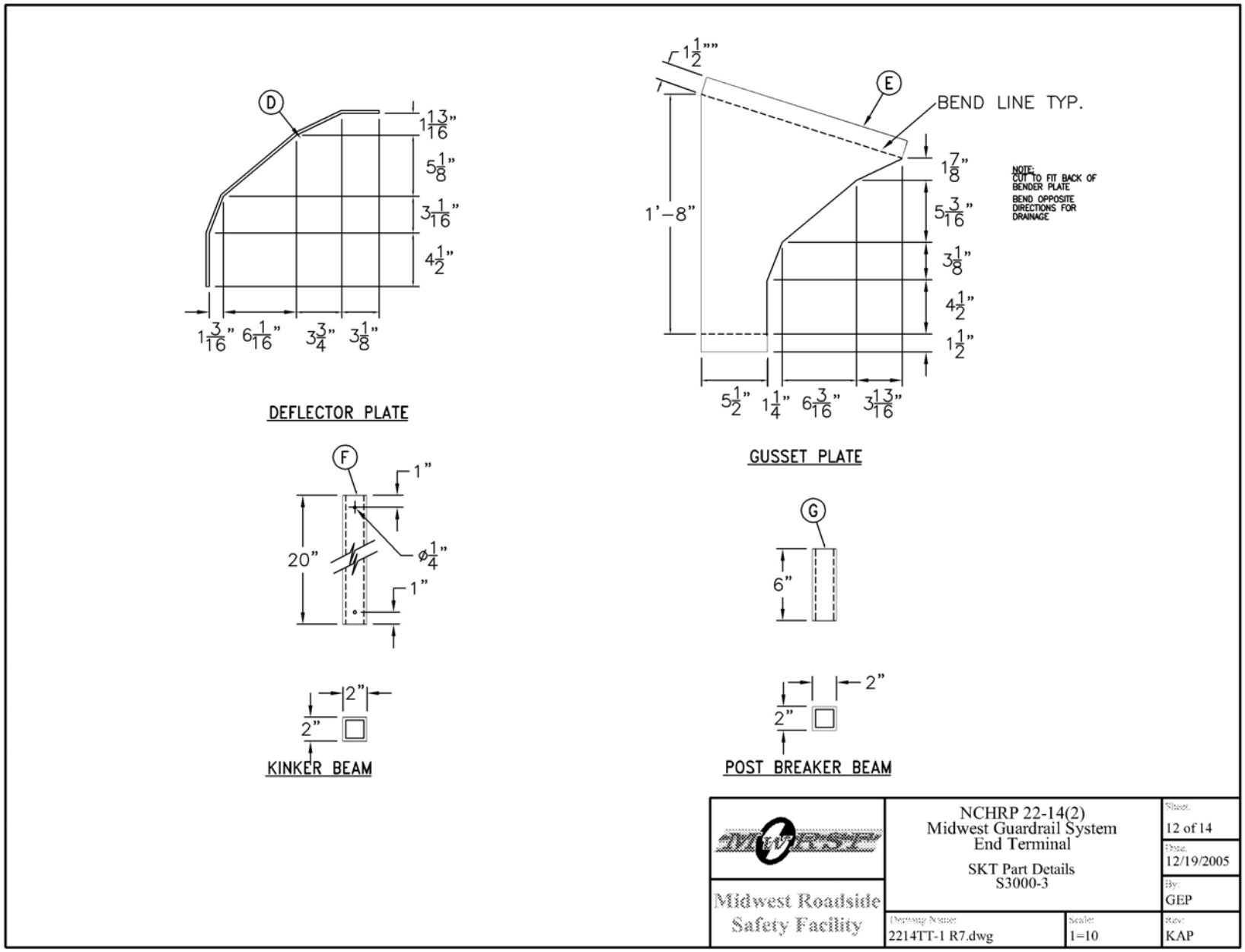

Figure A-12. Midwest Guardrail System End Terminal - SKT Head Details (English)

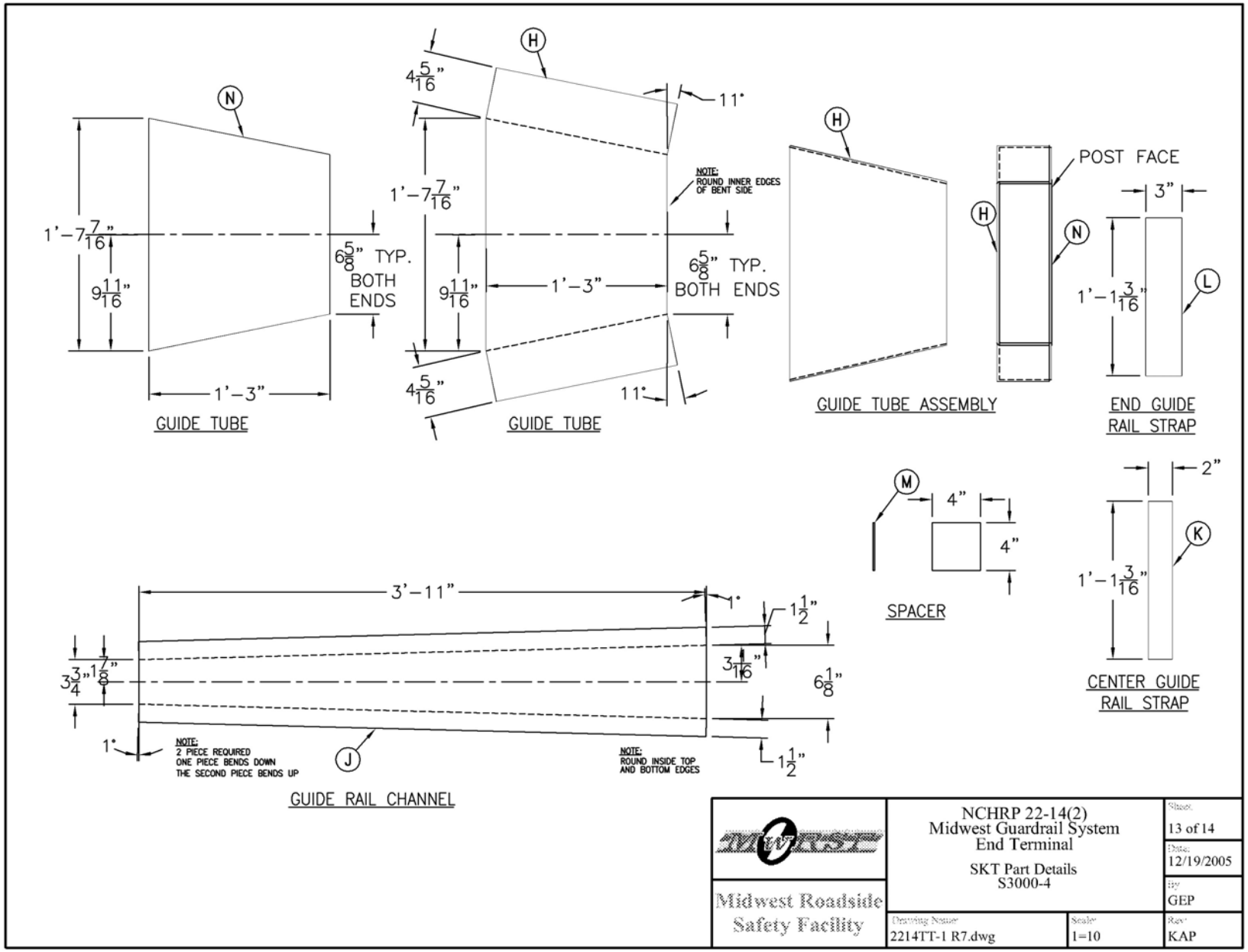

Figure A-13. Midwest Guardrail System End Terminal - SKT Head Details (English)

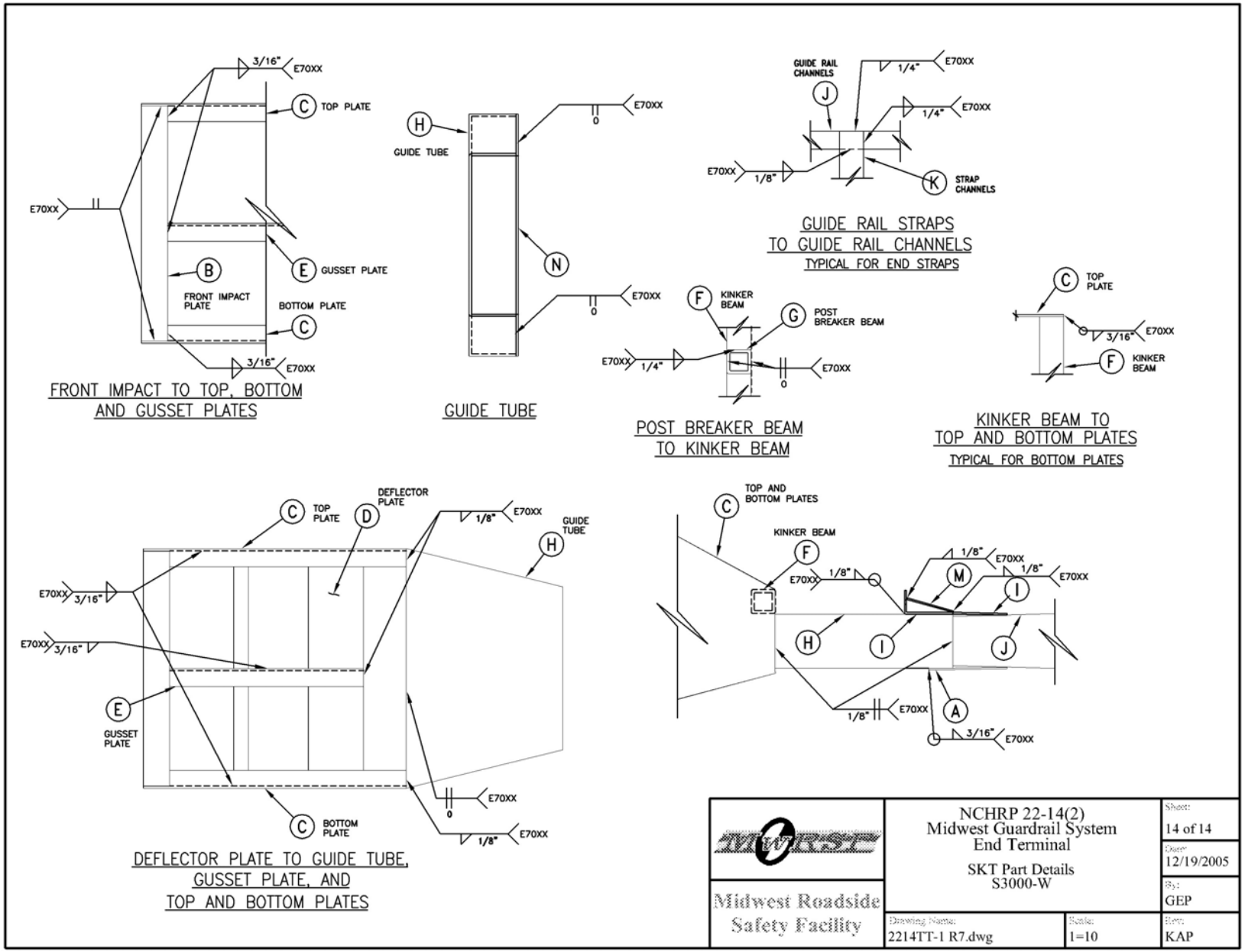

Figure A-14. Midwest Guardrail System End Terminal - SKT Head Details (English)

APPENDIX B

Test Summary Sheet in English Units

Figure B-1. Summary of Test Results and Sequential Photographs (English), Test 2214TT-1

0.000 sec | 0.100 sec | 0.220 sec | 0.342 sec | 0.432 sec

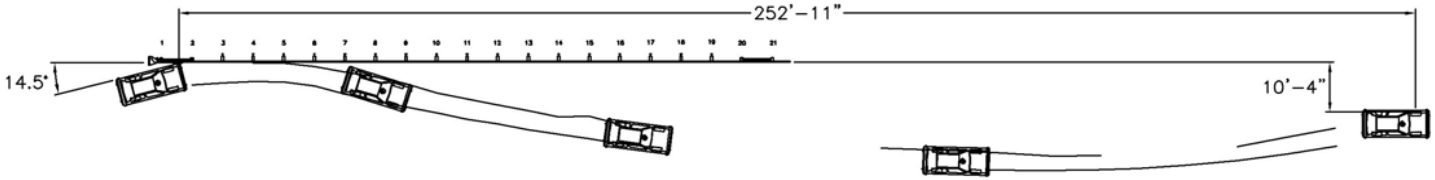

- Test Agency . . . . . MwRSF
- Test Number 2214TT-1
- Date 7/1/05
- NCHRP 350 Update Test Designation . . 3-34
- Appurtenance . . . . . SKT-MGS Tangent End Terminal
- Total Length . . . . . 130.64 ft
- Key Element . . . . . SKT impact head
- Key Element - Steel W-Beam
  - Thickness . . . . . 12 gauge
  - Top Mounting Height . . . . . 32 in.
- Key Elements - Wood Posts
  - Post Nos. 3 - 6 (CRT) . . . . . 6 in. x 8 in. by 6 ft long
  - Spacing . . . . . 75 in.
- Key Elements - Steel Posts
  - Post Nos. 7 - 19 . . . . . W6x9 by 6 ft long
- Key Elements - Wood Spacer Blocks
  - Post Nos. 3 - 19 . . . . . 6 in. x 12 in. by 14.25 in. long
- Type of Soil . . . . . Grading B - AASHTO M 147-65 (1990)
- Test Vehicle
  - Type/Designation 1170C
  - Make and Model . . . . . 2002 Kia Rio
  - Curb . . . . . 2,326 lbs
  - Test Inertial . . . . . 2,430 lbs
  - Gross Static . . . . . 2,596 lbs
- Impact Conditions
  - Speed . . . . . 64.6 mph
  - Angle . . . . . 14.5 degrees
  - Target Impact Location . . . . . 28.9 in. downstream centerline post no. 1
  - Actual Impact Location . . . . . 39.9 in. downstream centerline post no. 1
- Exit Conditions
  - Speed . . . . . 43.1 mph
  - Angle . . . . . 8.8 degrees
  - Exit Box Criterion . . . . . Pass
- Post-Impact Trajectory
  - Vehicle Stability . . . . . Satisfactory
  - Stopping Distance . . . . . 252 ft - 11 in. downstream
    10 ft - 4 in. traffic-side face
- Occupant Impact Velocity (350 Update)
  - Longitudinal . . . . . 17.85 ft/s < 39.4 ft/s
  - Lateral . . . . . 13.45 ft/s < 39.4 ft/s
- Occupant Ridedown Deceleration (350 Update)
  - Longitudinal . . . . . 7.53 Gs < 20 Gs
  - Lateral . . . . . 7.09 Gs < 20 Gs
- THIV (not required) . . . . . 22.87 ft/s
- PHD (not required) . . . . . 8.41 Gs
- Test Article Damage . . . . . Moderate
- Test Article Deflections
  - Permanent Set . . . . . 23 in.
  - Dynamic . . . . . 27.7 in.
  - Working Width . . . . . 48.5 in.
- Vehicle Damage . . . . . Moderate
  - VDS[4] 11-LFQ-6
  - CDC[5] 11-LYEW4
  - Maximum Deformation . . . . . 6 in. at left-front floorpan

Figure B-1. Summary of Test Results and Sequential Photographs (English), Test 2214TT-1

APPENDIX C

Occupant Compartment Deformation Data, Test 2214TT-1

Figure C-1. Occupant Compartment Deformation Data - Set 1, Test 2214TT-1

Figure C-2. Occupant Compartment Deformation Data - Set 2, Test 2214TT-1

Figure C-3. Occupant Compartment Deformation Index (OCDI), Test 2214TT-1

Figure C-4. NASS Crush Data, Test 2214TT-1

VEHICLE PRE/POST CRUSH INFO
Set-1

TEST: 2214TT-1
VEHICLE: 02 KIA RIO SEDAN

Note: If impact is on driver side need to enter negative number for Y

POINT	X	Y	Z	X'	Y'	Z'	DEL X	DEL Y	DEL Z
1	23	-18.75	2.25	19.5	-12.75	0.5	-3.5	6	-1.75
2	24.5	-14.25	3	23.5	-11.75	2.5	-1	2.5	-0.5
3	26	-8.75	2.75	26	-8.75	3.25	0	0	0.5
4	25.75	-5.5	2.5	25.75	-5.5	2.75	0	0	0.25
5	25.75	-1	2.5	25.75	-1.25	2.75	0	-0.25	0.25
6	18.5	-18.25	6.75	NA	NA		NA	NA	-6.75
7	19	-14	6.25	18.5	-11.5	4	-0.5	2.5	-2.25
8	20	-8.25	5.5	20.25	-8.75	5.75	0.25	-0.5	0.25
9	20	-4.5	5.5	20.25	-5	6	0.25	-0.5	0.5
10	20.5	-1	5.25	20.5	-1	5.25	0	0	0
11	14.25	-18.75	6.75	12.5	-15.75	5	-1.75	3	-1.75
12	14.5	-14	6.25	14.5	-13.75	6.75	0	0.25	0.5
13	14.5	-8.5	5.5	14.75	-8.75	5.75	0.25	-0.25	0.25
14	14.75	-4.25	5.25	14.75	-4.25	5.5	0	0	0.25
15	15	-0.5	4.75	15	-0.5	4.25	0	0	-0.5
16	10.75	-19	6.5	9.5	-16.75	4.75	-1.25	2.25	-1.75
17	10.5	-14	6	10.5	-14	6.75	0	0	0.75
18	11	-8.5	5.25	11	-8.5	5.5	0	0	0.25
19	11	-4.25	5	11	-4.25	5.25	0	0	0.25
20	11.25	-0.25	4.5	11.25	-0.25	4.25	0	0	-0.25
21	7.75	-18.5	6.5	7.25	-18	6.25	-0.5	0.5	-0.25
22	7.75	-13.75	6	7.75	-14	6.5	0	-0.25	0.5
23	8.25	-8.5	5	8.25	-8.5	5.5	0	0	0.5
24	8	-4.25	5	8	-4.25	5.25	0	0	0.25
25	8	-0.25	4.5	8.25	-0.25	4.5	0.25	0	0
26	3.25	-15.5	6	3.25	-15.5	6.5	0	0	0.5
27	4	-8.75	4.75	4	-8.75	5.25	0	0	0.5
28	3.5	-1.25	4.25	3.5	-1.25	4.5	0	0	0.25
29									
30									

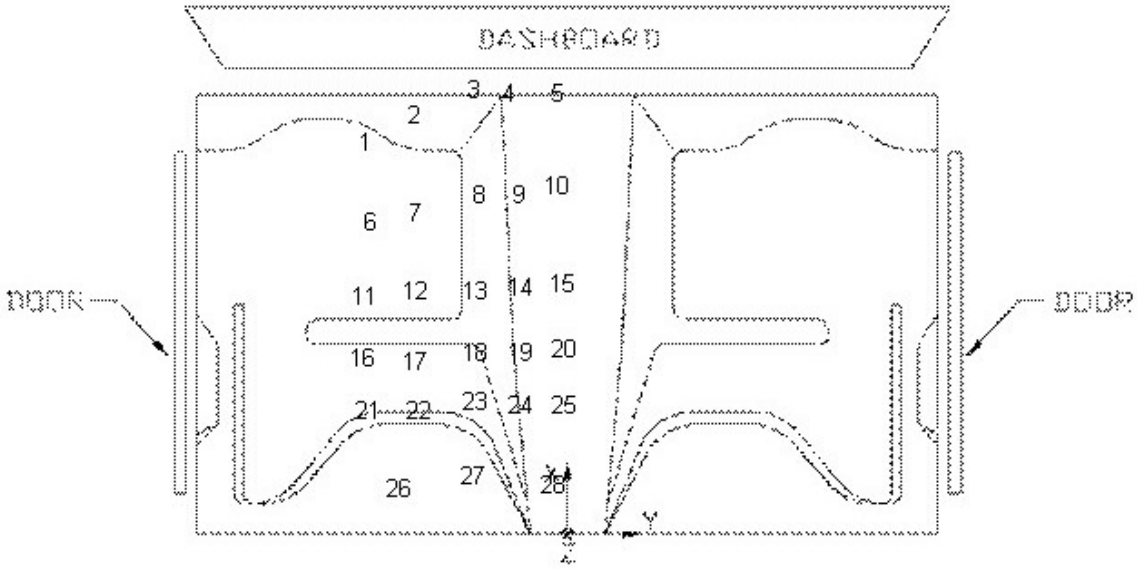

Figure C-1. Occupant Compartment Deformation Data - Set 1, Test 2214TT-1

VEHICLE PRE/POST CRUSH INFO
Set-2

TEST: 2214TT-1
VEHICLE: 02 KIA RIO SEDAN

Note: If impact is on driver side need to enter negative number for Y

POINT	X	Y	Z	X'	Y'	Z'	DEL X	DEL Y	DEL Z
1	29.75	NA	-0.5	26	NA	1.25	-3.75	NA	1.75
2	31.25	NA	-1	30	NA	-1.25	-1.25	NA	-0.25
3	32.75	NA	-1.25	32.25	NA	-2	-0.5	NA	-0.75
4	32.5	NA	-1.25	32.25	NA	-1.75	-0.25	NA	-0.5
5	32.5	NA	-1	32.25	NA	-1.5	-0.25	NA	-0.5
6	25.25	NA	-5	NA	NA	NA	NA	NA	NA
7	25.75	NA	-4.5	25.25	NA	-3	-0.5	NA	1.5
8	26.75	NA	-4	27	NA	-4.5	0.25	NA	-0.5
9	26.75	NA	-4.25	27.25	NA	-5	0.5	NA	-0.75
10	27.25	NA	-4	27.75	NA	-4.75	0.5	NA	-0.75
11	21	NA	-5.25	19.75	NA	-3.75	-1.25	NA	1.5
12	21.25	NA	-4.75	21.5	NA	-5.25	0.25	NA	-0.5
13	21.25	NA	-4.25	21.5	NA	-4.75	0.25	NA	-0.5
14	21.5	NA	-4.25	22	NA	-4.75	0.5	NA	-0.5
15	21.75	NA	-4	22.25	NA	-4.5	0.5	NA	-0.5
16	17.5	NA	-5	16.5	NA	-3.75	-1	NA	1.25
17	17.25	NA	-4.75	18	NA	-5.75	0.75	NA	-1
18	17.75	NA	-4.25	18	NA	-4.75	0.25	NA	-0.5
19	17.75	NA	-4.25	18.25	NA	-4.75	0.5	NA	-0.5
20	18	NA	-4	18.5	NA	-4.25	0.5	NA	-0.25
21	14.5	NA	-5	14.5	NA	-5.25	0	NA	-0.25
22	14.5	NA	-4.75	15.25	NA	-5.5	0.75	NA	-0.75
23	15	NA	-4	15.25	NA	-4.5	0.25	NA	-0.5
24	14.75	NA	-4.25	15.5	NA	-4.5	0.75	NA	-0.25
25	14.75	NA	-4	15.25	NA	-4.25	0.5	NA	-0.25
26	10	NA	-5	11.25	NA	-5.5	1.25	NA	-0.5
27	10.75	NA	-4	11	NA	-4.5	0.25	NA	-0.5
28	10.25	NA	-4	11.25	NA	-4.25	1	NA	-0.25
29									
30									

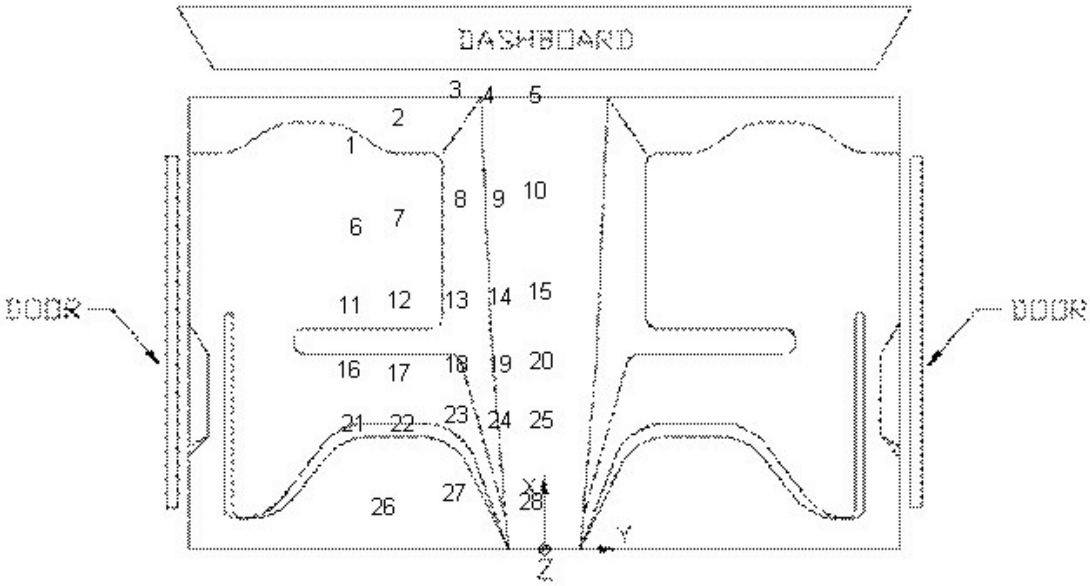

Figure C-2. Occupant Compartment Deformation Data - Set 2, Test 2214TT-1

Occupant Compartment Deformation Index (OCDI)

Test No. 2214TT-1
Vehicle Type: 1100C

OCDI = XXABCDEFGHI

XX = location of occupant compartment deformation

A = distance between the dashboard and a reference point at the rear of the occupant compartment, such as the top of the rear seat or the rear of the cab on a pickup

B = distance between the roof and the floor panel

C = distance between a reference point at the rear of the occupant compartment and the motor panel

D = distance between the lower dashboard and the floor panel

E = interior width

F = distance between the lower edge of right window and the upper edge of left window

G = distance between the lower edge of left window and the upper edge of right window

H= distance between bottom front corner and top rear corner of the passenger side window

I= distance between bottom front corner and top rear corner of the driver side window

Severity Indices

0 - if the reduction is less than 3%
1 - if the reduction is greater than 3% and less than or equal to 10 %
2 - if the reduction is greater than 10% and less than or equal to 20 %
3 - if the reduction is greater than 20% and less than or equal to 30 %
4 - if the reduction is greater than 30% and less than or equal to 40 %

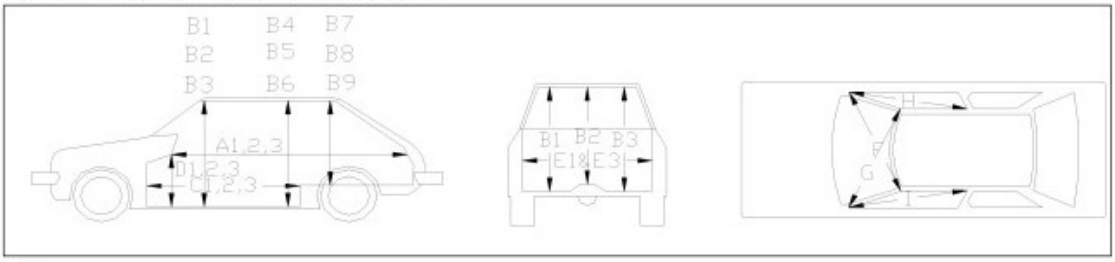

where,
1 = Passenger Side
2 = Middle
3 = Driver Side

Location:

Measurement	Pre-Test (in.)	Post-Test (in.)	Change (in.)	% Difference	Severity Index
A1	44.50	44.00	-0.50	-1.12	0
A2	45.00	44.75	-0.25	-0.56	0
A3	45.25	45.25	0.00	0.00	0
B1	40.75	41.50	0.75	1.84	0
B2	37.75	37.75	0.00	0.00	0
B3	40.75	40.75	0.00	0.00	0
C1	59.25	58.75	-0.50	-0.84	0
C2	57.50	57.50	0.00	0.00	0
C3	53.25	53.25	0.00	0.00	0
D1	19.75	19.00	-0.75	-3.80	1
D2	22.50	22.50	0.00	0.00	0
D3	21.25	21.25	0.00	0.00	0
E1	51.75	49.75	-2.00	-3.86	1
E3	50.75	51.00	0.25	0.49	0
F	48.50	49.00	0.50	1.03	0
G	48.00	47.50	-0.50	-1.04	0
H	38.00	38.00	0.00	0.00	0
I	38.00	37.00	-1.00	-2.63	0

Note: Maximum sevrity index for each variable (A-I) is used for determination of final OCDI value

Final OCDI: XX A B C D E F G H I
LF 0 0 0 1 1 0 0 0 0

Figure C-3. Occupant Compartment Deformation Index (OCDI), Test 2214TT-1

Date: 7/1/05 Test Number: 2214TT-1 Model: KIA Rio

Make: KIA Vehicle I.D.#: KNADC123X26147526

Tire Size: 175/75 R14 Year: 2002 Odometer: 29323

(All Measurements Refer to Impacting Side)
*D is negative on passenger side
*Negative C values are possible

Vehicle Geometry – mm (in.)

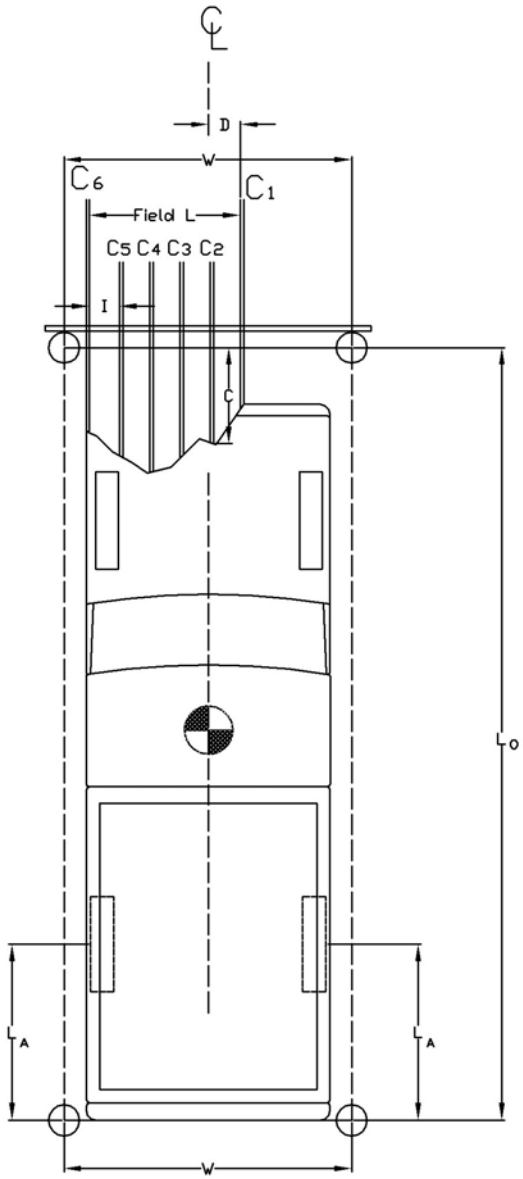

L_O 4547 (179)

L_A 1054 (41.5)

W 902 (35.5)

Field L 902 (35.5)

Bumper Height 457 (18)

Field L/5 = I 180 (7.1)

D 902 (35.5)

C_1 648 (25.5)

C_2 502 (19.75)

C_3 343 (13.5)

C_4 279 (11)

C_5 254 (10)

C_6 248 (9.75)

Figure C-4. NASS Crush Data, Test 2214TT-1

APPENDIX D

Accelerometer and Rate Transducer Data Analysis, Test 2214TT-1

Figure D-1. Graph of Longitudinal Deceleration, Test 2214TT-1

Figure D-2. Graph of Longitudinal Occupant Impact Velocity, Test 2214TT-1

Figure D-3. Graph of Longitudinal Occupant Displacement, Test 2214TT-1

Figure D-4. Graph of Lateral Deceleration, Test 2214TT-1

Figure D-5. Graph of Lateral Occupant Impact Velocity, Test 2214TT-1

Figure D-6. Graph of Lateral Occupant Displacement, Test 2214TT-1

Figure D-7. Graph of Roll, Pitch, and Yaw Angular Displacements, Test 2214TT-1

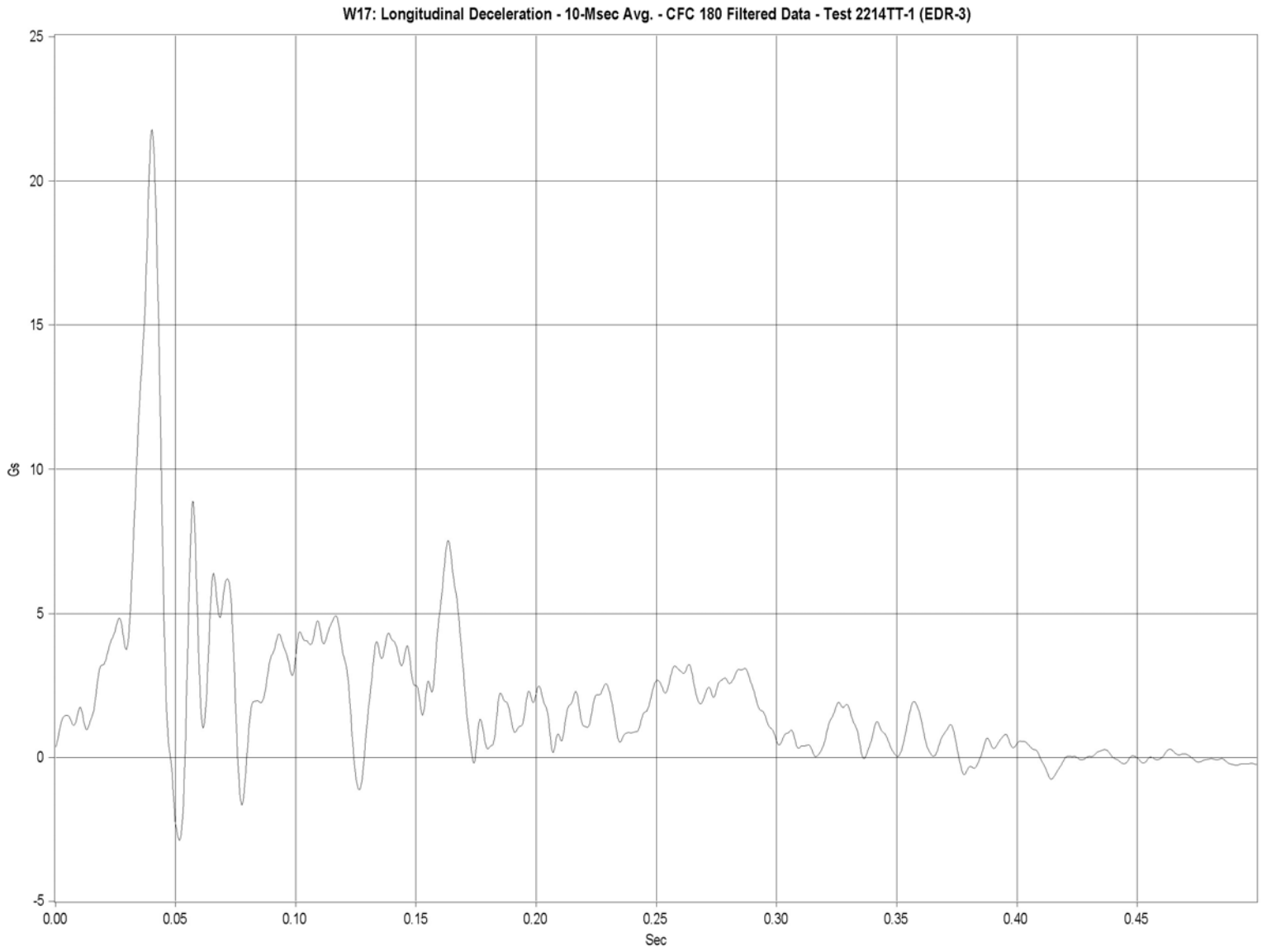

Figure D-1. Graph of Longitudinal Deceleration, Test 2214TT-1

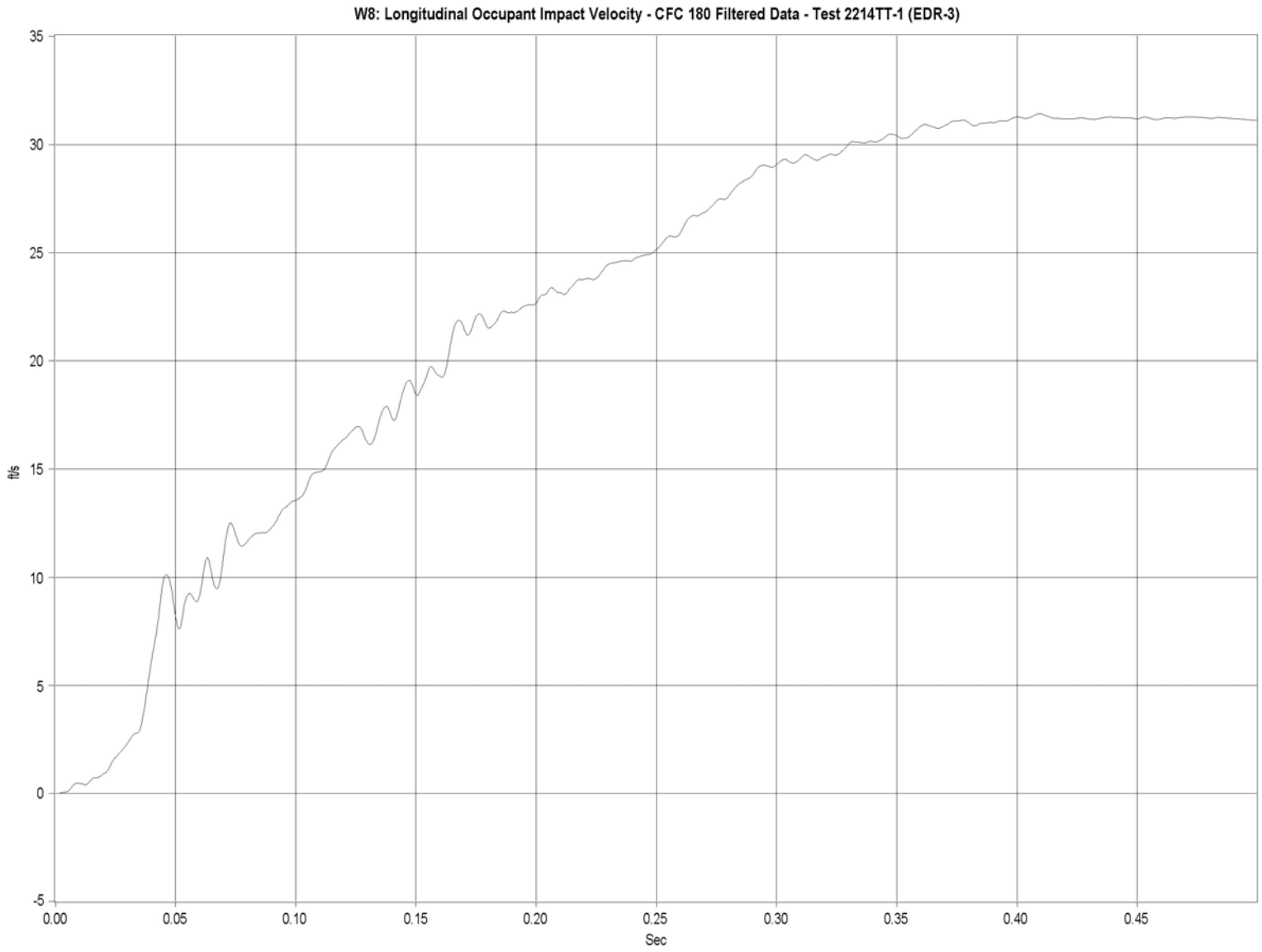

Figure D-2. Graph of Longitudinal Occupant Impact Velocity, Test 2214TT-1

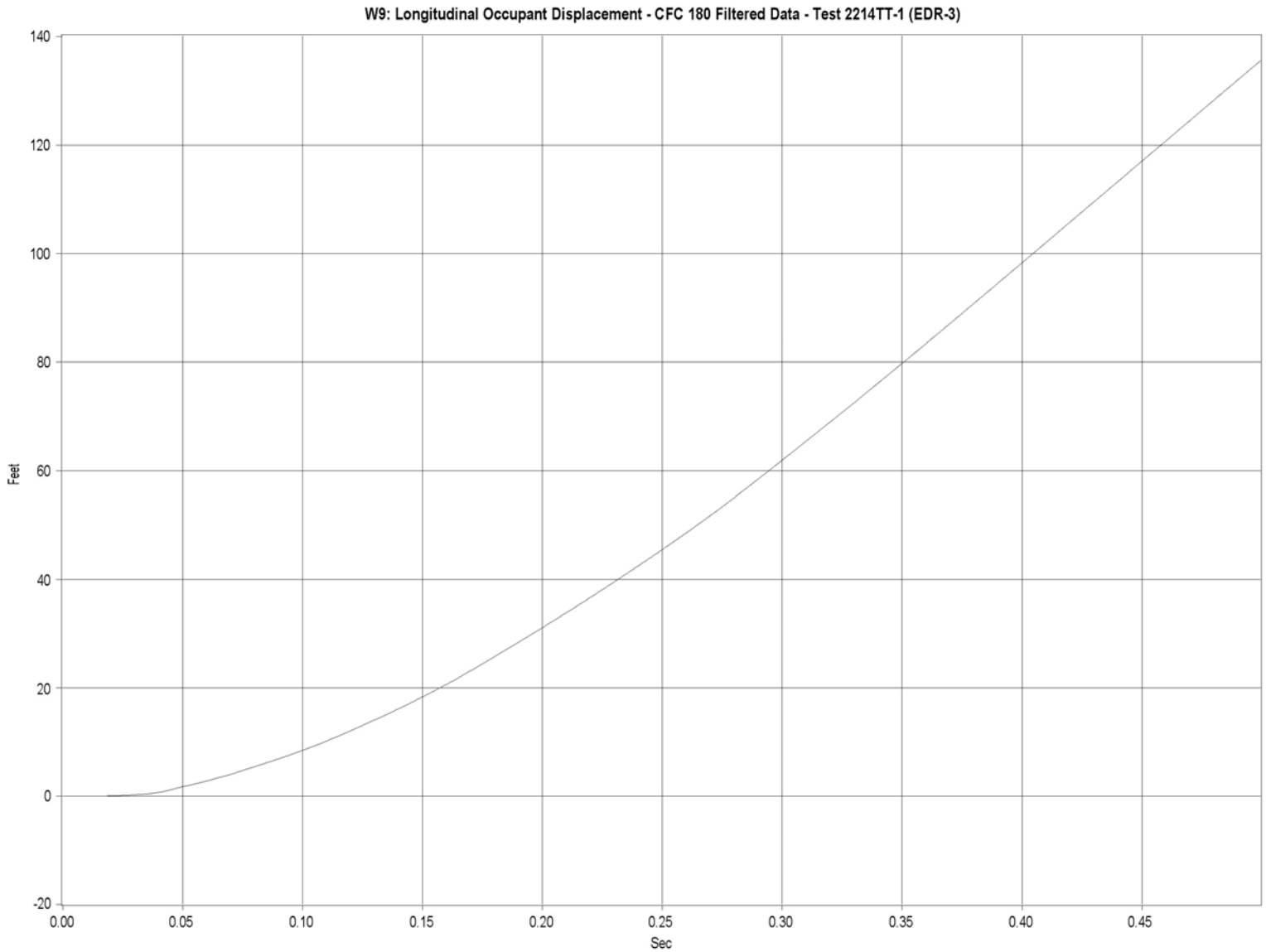

Figure D-3. Graph of Longitudinal Occupant Displacement, Test 2214TT-1

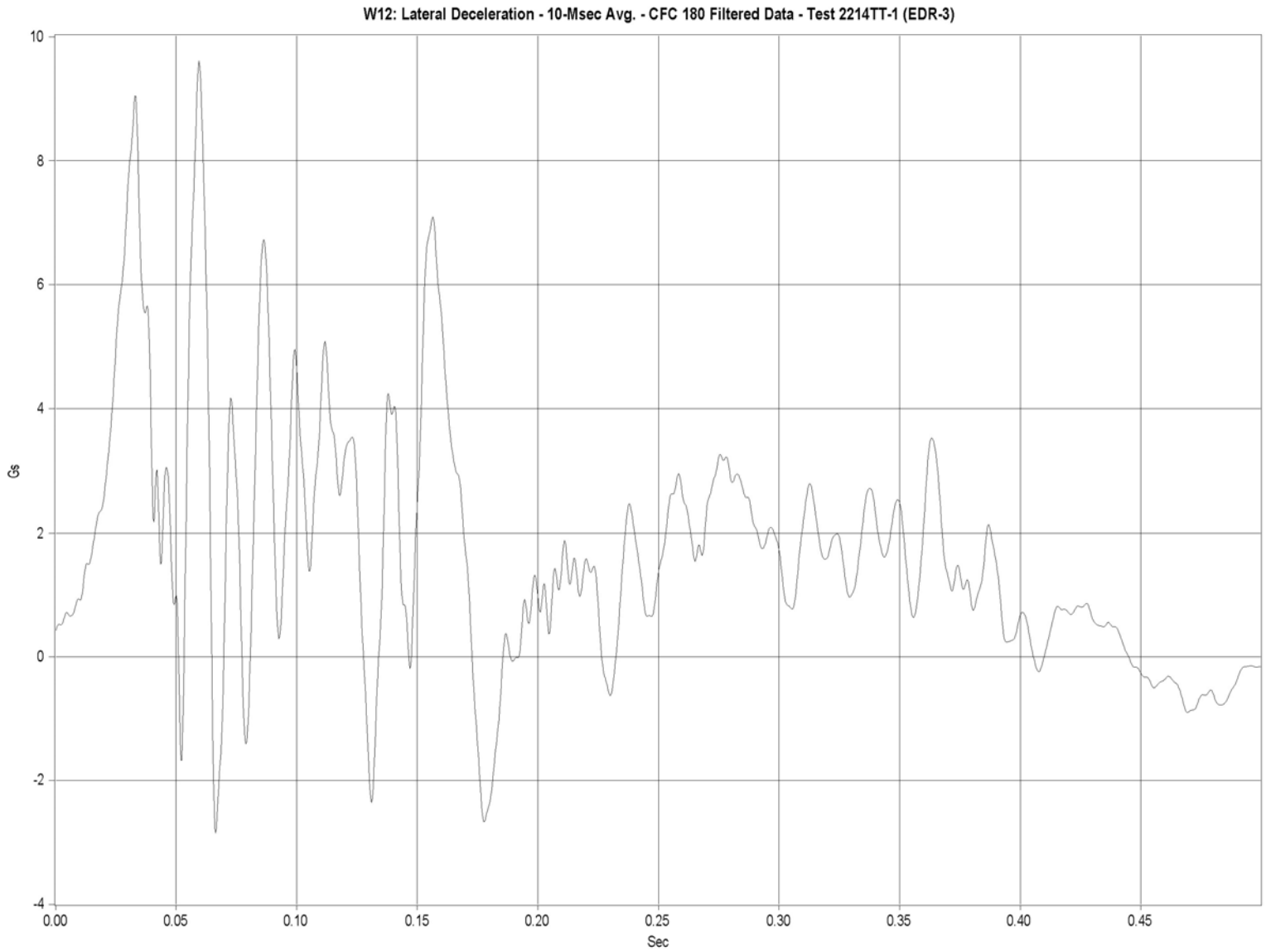

Figure D-4. Graph of Lateral Deceleration, Test 2214TT-1

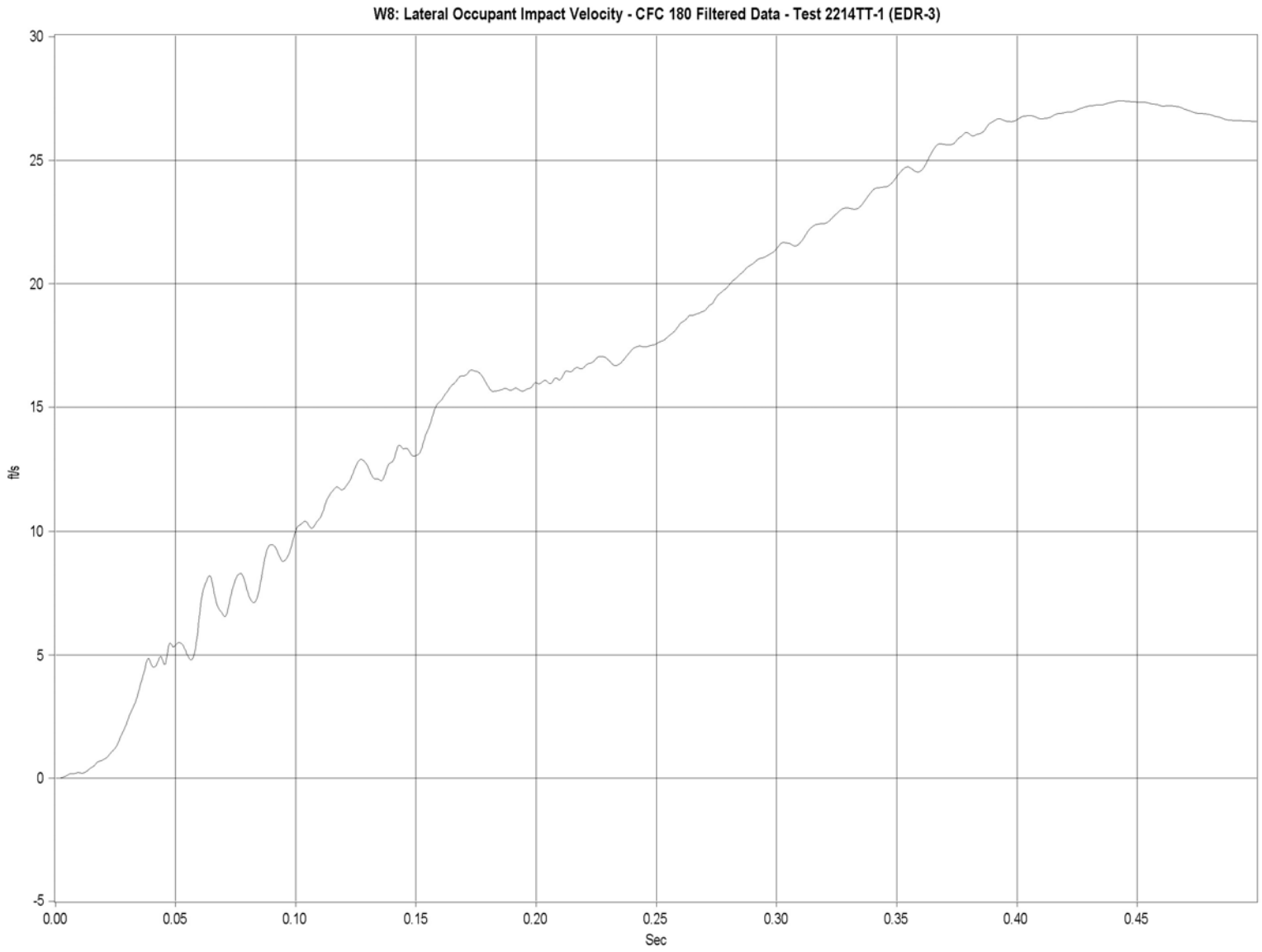

Figure D-5. Graph of Lateral Occupant Impact Velocity, Test 2214TT-1

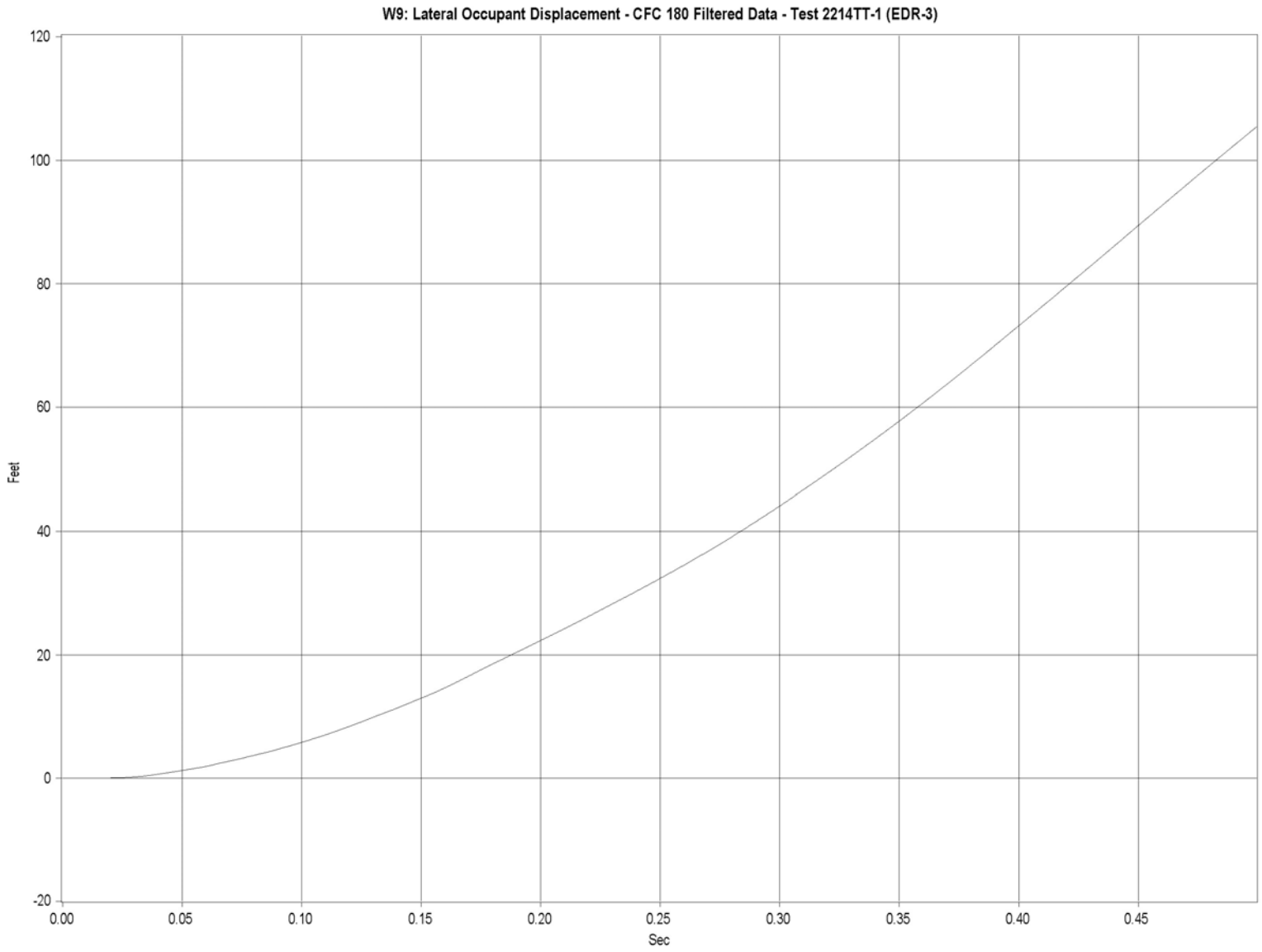

Figure D-6. Graph of Lateral Occupant Displacement, Test 2214TT-1

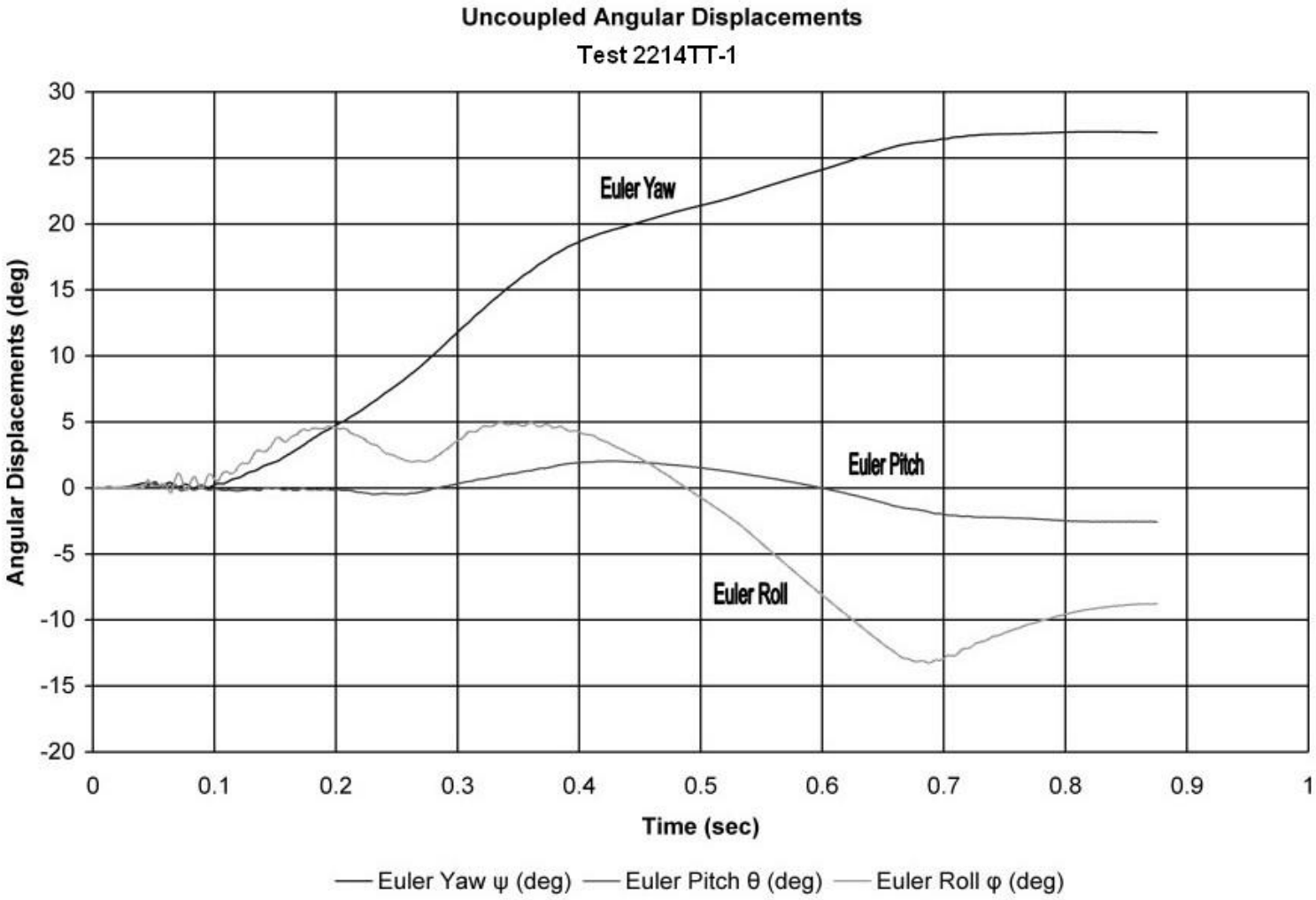

Figure D-7. Graph of Roll, Pitch, and Yaw Angular Displacements, Test 2214TT-1