PERFORMANCE EVALUATION OF THE PERMANENT NEW JERSEY SAFETY SHAPE BARRIER – UPDATE TO NCHRP 350 TEST NO. 4-12 (2214NJ-2)

Submitted by

Karla A. Polivka, M.S.M.E., E.I.T.
Research Associate Engineer

Ronald K. Faller, Ph.D., P.E.
Research Assistant Professor

Dean L. Sicking, Ph.D., P.E.
Professor and MwRSF Director

John R. Rohde, Ph.D., P.E.
Associate Professor

Bob W. Bielenberg, M.S.M.E., E.I.T.
Research Associate Engineer

John D. Reid, Ph.D.
Associate Professor

Brian A. Coon, Ph.D., P.E.
Research Associate Engineer

MIDWEST ROADSIDE SAFETY FACILITY
University of Nebraska-Lincoln
527 Nebraska Hall
Lincoln, Nebraska 68588-0529
(402) 472-6864

Submitted to

NATIONAL COOPERATIVE HIGHWAY RESEARCH PROGRAM
Transportation Research Board
National Research Council
2101 Constitution Avenue, N.W.
Washington, D.C. 20418

MwRSF Research Report No. TRP-03-178-06

October 13, 2006

Technical Report Documentation Page

1. Report No.	2.	3. Recipient's Accession No.
TRP-03-178-06		

4. Title and Subtitle	5. Report Date
Performance Evaluation of the Permanent New Jersey Safety Shape Barrier – Update to NCHRP 350 Test No. 4-12 (2214NJ-2)	October 13, 2006
	6.

7. Author(s)	8. Performing Organization Report No.
Polivka, K.A., Faller, R.K., Sicking, D.L., Rohde, J.R., Bielenberg, B.W., Reid, J.D., and Coon, B.A.	TRP-03-178-06

9. Performing Organization Name and Address	10. Project/Task/Work Unit No.
Midwest Roadside Safety Facility (MwRSF) University of Nebraska-Lincoln 527 Nebraska Hall Lincoln, NE 68588-0529	
	11. Contract © or Grant (G) No. NCHRP 22-14(2)

12. Sponsoring Organization Name and Address	13. Type of Report and Period Covered
National Cooperative Highway Research Program Transportation Research Board National Research Council 2101 Constitution Avenue, N.W. Washington, D.C. 20418	Final Report 2004-2006
	14. Sponsoring Agency Code

15. Supplementary Notes

Prepared in cooperation with U.S. Department of Transportation, Federal Highway Administration

16. Abstract (Limit: 200 words)

Based on the proposed changes to the National Cooperative Highway Research Program (NCHRP) Report No. 350 guidelines, NCHRP Project 22-14(2) researchers deemed it appropriate to evaluate permanent safety shape barrier systems prior to finalizing the new crash testing procedures and guidelines. For this effort, the permanent New Jersey Safety Shape barrier was selected for evaluation. One full-scale vehicle crash test was performed on the longitudinal barrier system in accordance with the Test Level 4 (TL-4) requirements presented in the Update to NCHRP Report No. 350. For the permanent barrier testing program, a 10000S single unit truck was used.

The permanent safety shape barrier provided an unacceptable safety performance when impacted by the single unit truck, thus failing to meet the proposed TL-4 requirements presented in the Update to NCHRP Report No. 350.

17. Document Analysis/Descriptors	18. Availability Statement
Highway Safety, Roadside Appurtenances, Longitudinal Barriers, Permanent Barrier, Safety Shape, Crash Test, Compliance Test, NCHRP 350 Update	No restrictions. Document available from: National Technical Information Services, Springfield, Virginia 22161

19. Security Class (this report)	20. Security Class (this page)	21. No. of Pages	22. Price
Unclassified	Unclassified	62	

DISCLAIMER STATEMENT

The contents of this report reflect the views of the authors who are responsible for the facts and the accuracy of the data presented herein. The contents do not necessarily reflect the official views nor policies of the National Research Council of the Transportation Research Board nor the Federal Highway Administration. This report does not constitute a standard, specification, or regulation.

ACKNOWLEDGMENTS

The authors wish to acknowledge several sources that made a contribution to this project: (1) the National Research Council of the Transportation Research Board for sponsoring this project; and (2) MwRSF personnel for constructing the barrier and conducting the crash test.

A special thanks is also given to the following individuals who made a contribution to the completion of this research project.

Midwest Roadside Safety Facility

J.C. Holloway, M.S.C.E., E.I.T., Research Manager
C.L. Meyer, B.S.M.E., E.I.T., Research Engineer II
A.T. Russell, B.S.B.A., Laboratory Mechanic II
K.L. Krenk, B.S.M.A, Field Operations Manager
A.T. McMaster, Laboratory Mechanic I
Undergraduate and Graduate Assistants

Transportation Research Board

Charles W. Niessner, Senior Program Officer
NCHRP 22-14(2) Panel Members

Federal Highway Administration

John Perry, P.E., Nebraska Division Office
Danny Briggs, Nebraska Division Office

Dunlap Photography

James Dunlap, President and Owner

TABLE OF CONTENTS

Page

TECHNICAL REPORT DOCUMENTATION PAGE i

DISCLAIMER STATEMENT ii

ACKNOWLEDGMENTS iii

TABLE OF CONTENTS iv
List of Figures vi
List of Tables vii

1 INTRODUCTION 1
1.1 Problem Statement 1
1.2 Objective 2
1.3 Scope 2

2 TEST REQUIREMENTS AND EVALUATION CRITERIA 3
2.1 Test Requirements 3
2.2 Evaluation Criteria 3

3 TEST CONDITIONS 6
3.1 Test Facility 6
3.2 Vehicle Tow and Guidance System 6
3.3 Test Vehicles 6
3.4 Data Acquisition Systems 9
3.4.1 Accelerometers 9
3.4.2 Rate Transducers 11
3.4.3 High-Speed Photography 11
3.4.4 Pressure Tape Switches 12

4 DESIGN DETAILS 14

5 CRASH TEST 23
5.1 Test 2214NJ-2 23
5.2 Test Description 23
5.3 Barrier Damage 24
5.4 Vehicle Damage 25
5.5 Occupant Risk Values 25
5.6 Discussion 26

6 SUMMARY AND CONCLUSIONS 42

7 REFERENCES 44

8 APPENDICES 45
APPENDIX A - English-Unit System Drawings 46
APPENDIX B - Test Summary Sheet in English Units 51
APPENDIX C - Occupant Compartment Deformation Data, Test 2214NJ-2 53
APPENDIX D - Accelerometer and Rate Transducer Data Analysis, Test 2214NJ-2 . . 55

List of Figures

Page

1. Test Vehicle, Test 2214NJ-2 7
2. Vehicle Dimensions, Test 2214NJ-2 8
3. Vehicle Target Locations, Test 2214NJ-2 10
4. Location of High-Speed Cameras, Test 2214NJ-2 13
5. Layout of Permanent New Jersey Safety Shape Barrier 16
6. Permanent New Jersey Safety Shape Barrier Cross Section 17
7. Permanent New Jersey Safety Shape Barrier Reinforcement Layout Details 18
8. Permanent New Jersey Safety Shape Barrier Reinforcement Details 19
9. Permanent New Jersey Safety Shape Barrier System Reinforcement 20
10. Permanent New Jersey Safety Shape Barrier System Construction 21
11. Permanent New Jersey Safety Shape Barrier System 22
12. Summary of Test Results and Sequential Photographs, Test 2214NJ-2 27
13. Additional Sequential Photographs, Test 2214NJ-2 28
14. Additional Sequential Photographs, Test 2214NJ-2 29
15. Additional Sequential Photographs, Test 2214NJ-2 30
16. Documentary Photographs, Test 2214NJ-2 31
17. Documentary Photographs, Test 2214NJ-2 32
18. Impact Location, Test 2214NJ-2 33
19. Vehicle Final Position and Trajectory Marks, Test 2214NJ-2 34
20. Permanent New Jersey Safety Shape Barrier Damage, Test 2214NJ-2 35
21. Permanent New Jersey Safety Shape Barrier Damage, Test 2214NJ-2 36
22. Permanent New Jersey Safety Shape Barrier Damage, Test 2214NJ-2 37
23. Vehicle Damage, Test 2214NJ-2 38
24. Vehicle Damage, Test 2214NJ-2 39
25. Vehicle Undercarriage Damage, Test 2214NJ-2 40
26. Vehicle Cargo Box Interior Damage, Test 2214NJ-2 41
A-1. Layout of Permanent New Jersey Safety Shape Barrier (English) 47
A-2. Permanent New Jersey Safety Shape Barrier Cross Section (English) 48
A-3. Permanent New Jersey Safety Shape Barrier Reinforcement Layout Details (English) . . . 49
A-4. Permanent New Jersey Safety Shape Barrier Reinforcement Details (English) 50
B-1. Summary of Test Results and Sequential Photographs, Test 2214NJ-2 52
C-1. Occupant Compartment Deformation Index (OCDI), Test 2214NJ-2 54
D-1. Graph of Longitudinal Deceleration, Test 2214NJ-2 56
D-2. Graph of Longitudinal Occupant Impact Velocity, Test 2214NJ-2 57
D-3. Graph of Longitudinal Occupant Displacement, Test 2214NJ-2 58
D-4. Graph of Lateral Deceleration, Test 2214NJ-2 59
D-5. Graph of Lateral Occupant Impact Velocity, Test 2214NJ-2 60
D-6. Graph of Lateral Occupant Displacement, Test 2214NJ-2 61
D-7. Graph of Roll, Pitch, and Yaw Angular Displacements, Test 2214NJ-2 62

List of Tables

Page

1. Update to NCHRP Report No. 350 Test Level 4 Crash Test Conditions 4
2. Update to NCHRP Report No. 350 Evaluation Criteria for Crash Tests 5
3. Summary of Safety Performance Evaluation Results 43

1 INTRODUCTION

1.1 Problem Statement

In the late 1990s, roadside safety experts, State DOT representatives, Federal government officials, and industry personnel began discussions and preparations for updating the National Cooperative Highway Research Program (NCHRP) Report No. 350 safety performance guidelines (1). The new guidelines would improve upon existing test procedures, consider changes in the vehicle fleet, provide criteria for new roadside hardware categories and re-evaluate the appropriateness of the impact conditions.

In 1997, NCHRP Project 22-14, entitled *Improvement of the Procedures for the Safety Performance Evaluation of Roadside Features*, was initiated with the intent to: (1) evaluate the relevance and efficacy of the crash testing procedures, (2) assess the needs for updating NCHRP Report No. 350, and (3) provide recommended strategies for their implementation. Following the completion of this NCHRP study at the Texas Transportation Institute (TTI) in 2001, a follow-on research study was begun in 2002. NCHRP Project 22-14(2), entitled *Improved Procedures for Safety Performance Evaluation of Roadside Features*, was undertaken by Midwest Roadside Safety Facility (MwRSF) researchers with the objectives to: (1) prepare the revised crash testing guidelines, (2) assess the effects of any proposed guidelines, and (3) identify research needs for future improvements to the procedures.

Consequently, it was anticipated that a number of revisions would be incorporated into the Update of NCHRP Report No. 350 guidelines (2). For example, changes in the vehicle fleet have resulted in the need to reassess the small car and pickup truck test vehicles. Accordingly, new, heavier test vehicles have been selected for both the small car and light truck classes of vehicles.

Additionally, during the second study, researchers determined that the 100 km/h (62.1 mph) impact speed and 25 degree impact angle would remain the same as used in NCHRP Report No. 350 for the large passenger vehicle class impacting longitudinal barriers. However, the impact angle for the small car impact condition would increase from 20 to 25 degrees for evaluating longitudinal barriers and the length-of-need for guardrail terminals. The effects of any changes to vehicle specifications or impact conditions must be understood before the safety performance evaluation guidelines are finalized. Therefore, a series of full-scale crash tests on NCHRP Report No. 350 approved systems were to be conducted with the new test vehicles and impact conditions.

1.2 Objective

The objective of the research project was to evaluate the safety performance of the permanent New Jersey safety shape barrier when full-scale vehicle crash tested according to the test designation no. 4-12 criteria presented in the Update of NCHRP Report No. 350 guidelines (2).

1.3 Scope

The research objective was achieved through the completion of several tasks. First, a full-scale vehicle crash test was performed on the permanent safety shape barrier. The crash test utilized a single unit truck, weighing approximately 10,000 kg (22,046 lbs). The target impact conditions for the test were an impact speed of 90.0 km/h (55.9 mph) and an impact angle of 15 degrees. Next, the test results were analyzed, evaluated, and documented. Finally, conclusions and recommendations were made that pertain to the safety performance of the permanent safety shape barrier relative to the test performed.

2 TEST REQUIREMENTS AND EVALUATION CRITERIA

2.1 Test Requirements

Historically, longitudinal barriers, such as W-beam guardrail systems, have been required to satisfy impact safety standards in order to be accepted by the Federal Highway Administration (FHWA) for use on National Highway System (NHS) construction projects or as a replacement for existing designs not meeting current safety standards. In recent years, these safety standards have consisted of the guidelines and procedures published in NCHRP Report No. 350 (1). However, NCHRP Project 22-14(2) generated revised testing procedures and guidelines for use in the evaluation of roadside safety appurtenances and were presented in the draft report entitled, *NCHRP Report 350 Update* (2). Therefore, according to Test Level 4 (TL-4) of the Update to NCHRP Report No. 350, longitudinal barrier systems must be subjected to three full-scale vehicle crash tests. The three full-scale crash tests are as follows:

1. Test Designation 4-10. An 1,100-kg (2,425-lb) passenger car impacting at a nominal speed and angle of 100.0 km/h (62.1 mph) and 25 degrees, respectively.

2. Test Designation 4-11. A 2,270-kg (5,004-lb) pickup truck impacting at a nominal speed and angle of 100.0 km/h (62.1 mph) and 25 degrees, respectively.

3. Test Designation 4-12. A 10,000-kg (22,046-lb) single unit truck impacting at a nominal speed and angle of 90.0 km/h (55.9 mph) and 15 degrees, respectively.

The test conditions for TL-4 longitudinal barriers are summarized in Table 1. Test Designation 4-12 was conducted for the permanent safety shape barrier described herein.

2.2 Evaluation Criteria

According to the Update to NCHRP Report No. 350, the evaluation criteria for full-scale

vehicle crash testing are based on three appraisal areas: (1) structural adequacy; (2) occupant risk; and (3) vehicle trajectory after collision. Criteria for structural adequacy are intended to evaluate the ability of the barrier to contain, redirect, or allow controlled vehicle penetration in a predictable manner. Occupant risk evaluates the degree of hazard to occupants in the impacting vehicle. Vehicle trajectory after collision is a measure of the potential for the post-impact trajectory of the vehicle to cause subsequent multi-vehicle accidents. This criterion also indicates the potential safety hazard for the occupants of other vehicles or the occupants of the impacting vehicle when subjected secondary collisions with other fixed objects. These three evaluation criteria are summarized in Table 2 and defined in greater detail in the Update to NCHRP Report No. 350 report (2). The full-scale vehicle crash tests were conducted and reported in accordance with the procedures provided in the Update to NCHRP Report No. 350.

Table 1. Update to NCHRP Report No. 350 Test Level 4 Crash Test Conditions

Test Article	Test Designation	Test Vehicle	Impact Conditions			Evaluation Criteria [1]
			Speed		Angle (degrees)	
			(km/h)	(mph)		
Longitudinal Barrier	4-10	1100C	100	62.1	25	A,D,F,H,I,M
	4-11	2270P	100	62.1	25	A,D,F,H,I,M
	4-12	10000S	90	55.9	15	A,D,G,M

[1] Evaluation criteria explained in Table 2.

Table 2. Update to NCHRP Report No. 350 Evaluation Criteria for Crash Tests

Structural Adequacy	A. Test article should contain and redirect the vehicle or bring the vehicle to a controlled stop; the vehicle should not penetrate, underride, or override the installation although controlled lateral deflection of the test article is acceptable.
Occupant Risk	D. Detached elements, fragments or other debris from the test article should not penetrate or show potential for penetrating the occupant compartment, or present an undue hazard to other traffic, pedestrians, or personnel in a work zone. Deformations of, or intrusions into, the occupant compartment should not exceed limits set forth in Section 5.3 and Appendix E of the Update to NCHRP Report No. 350.
	F. The vehicle should remain upright during and after collision.
	G. It is preferable, although not essential, that the vehicle remain upright during and after collision.
	H. Longitudinal and lateral occupant impact velocities should fall below the preferred value of 9.0 m/s (29.5 ft/s), or at least below the maximum allowable value of 12.0 m/s (39.4 ft/s).
	I. Longitudinal and lateral occupant ridedown accelerations should fall below the preferred value of 15 Gs, or at least below the maximum allowable value of 20.0 Gs.
Vehicle Trajectory	M. After impact, the vehicle shall exit the barrier within the exit box.

3 TEST CONDITIONS

3.1 Test Facility

The testing facility is located at the Lincoln Air Park on the northwest side of the Lincoln Municipal Airport and is approximately 8.0 km (5 mi.) northwest of the University of Nebraska-Lincoln.

3.2 Vehicle Tow and Guidance System

A reverse cable tow system with a 1:2 mechanical advantage was used to propel the test vehicle. The distance traveled and the speed of the tow vehicle were one-half that of the test vehicle. The test vehicle was released from the tow cable before impact with the barrier system. A digital speedometer was located on the tow vehicle to increase the accuracy of the test vehicle impact speed.

A vehicle guidance system developed by Hinch (3) was used to steer the test vehicle. A guide-flag, attached to the front-right wheel and the guide cable, was sheared off before impact with the barrier system. The 9.5-mm (0.375-in.) diameter guide cable was tensioned to approximately 15.6 kN (3,500 lbf), and supported laterally and vertically every 30.48 m (100 ft) by hinged stanchions. The hinged stanchions stood upright while holding up the guide cable, but as the vehicle was towed down the line, the guide-flag struck and knocked each stanchion to the ground. For test 2214NJ-2, the vehicle guidance system was 519 m (1,703 ft) long.

3.3 Test Vehicles

For test 2214NJ-2, a 1989 Ford F-800 was used as the test vehicle. The test inertial and gross static weights were 9,999 kg (22,045 lbs). The test vehicle is shown in Figure 1, and vehicle dimensions are shown in Figure 2.

Figure 1. Test Vehicle, Test 2214NJ-2

Date: 04/13/2006 Test Number: 2214NJ-2 Model: 10000S

Tire Sz FR: 11 R 22.5 Odometer: 137162 Make: Ford

Tire Sz RR: 11 R 22.5 V.I.N. #: 1FDXF82KVA08054 Year: 1989

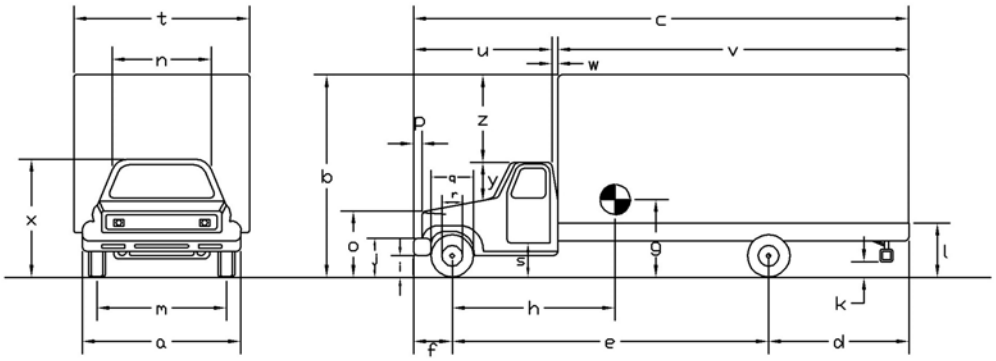

Vehicle Geometry – mm (inches)

a> fr. bump. width	2375 (93.5)	j> fr. bump. top	838 (33)	s> bot. door height	883 (34.75)
b> overall height	3515 (138.375)	k> rr. bump. bot.	584 (23)	t> overall width	2438 (96)
c> overall length	8299 (326.75)	l> rr. frame top	997 (39.25)	u> cab length	2610 (102.75)
d> rear overhang	2654 (104.5)	m> fr. track width	1886 (74.25)	v> trler/box length	5613 (221)
e> wheel base	4775 (188)	n> roof width	1549 (61)	w> gap width	76 (3)
f> front overhang	838 (33)	o> hood height	1549 (61)	x> overall fr. height	2257 (88.875)
g> C.G. height	1351 (53.2)	p> bump. extension	70 (2.75)	y> roof–hood dist.	517 (20.375)
h> C.G. hor. dist.	4163 (163.9)	q> fr. tire width	1035 (40.75)	z> roof height dif.	1270 (50.0)
i> fr. bump. bot.	533 (21)	r> fr. wheel width	597 (23.5)	wheel center height front	495 (19.5)
				wheel center height rear	505 (19.875)
				wheel well clearance (FR)	178 (46.375)
				wheel well clearance (RR)	1083 (42.625)
				Engine Type	8 Cyl. Gas
				Engine Size	429 ci

Weights – kg (lbs)

	Curb	Test Inertial	Gross Static
$W_{front\ axel}$	2126 (4687)	3084 (6800)	3084 (6800)
$W_{rear\ axel}$	3313 (7303)	6915 (15245)	6915 (15245)
W_{TOTAL}	5439 (11990)	9999 (22045)	9999 (22045)

Ballast 4539 (10006)

Transmission Type:
Automatic or (Manual)
FWD or (RWD) or 4WD

Note any damage prior to test: Rusty Cab Floor

Figure 2. Vehicle Dimensions, Test 2214NJ-2

The Suspension Method (4) was used to determine the vertical component of the center of gravity (c.g.) for the pickup truck. This method is based on the principle that the c.g. of any freely suspended body is in the vertical plane through the point of suspension. The vehicle was suspended successively in three positions, and the respective planes containing the c.g. were established. The intersection of these planes pinpointed the location of the center of gravity. The longitudinal component of the c.g. was determined using the measured axle weights. The location of the final center of gravity is shown in Figures 1 and 2.

Square black and white-checkered targets were placed on the vehicle to aid in the analysis of the high-speed film and E/cam and Photron video, as shown in Figure 3. Checkered targets were placed on the center of gravity, on the driver's side door, on the passenger's side door, and on the roof of the vehicle. The remaining targets were located for reference so that they could be viewed from the high-speed cameras for film analysis.

The front wheels of the test vehicle were aligned for camber, caster, and toe-in values of zero so that the vehicle would track properly along the guide cable. Two 5B flash bulbs were mounted on both the hood and roof of the vehicle to pinpoint the time of impact with the barrier on the AOS video. The flash bulbs were fired by a pressure tape switch mounted on the front face of the bumper. A remote-controlled brake system was installed in the test vehicle so the vehicle could be brought safely to a stop after the test.

3.4 Data Acquisition Systems

3.4.1 Accelerometers

One triaxial piezoresistive accelerometer system with a range of ±200 Gs was used to measure the acceleration in the longitudinal, lateral, and vertical directions at a sample rate of 10,000

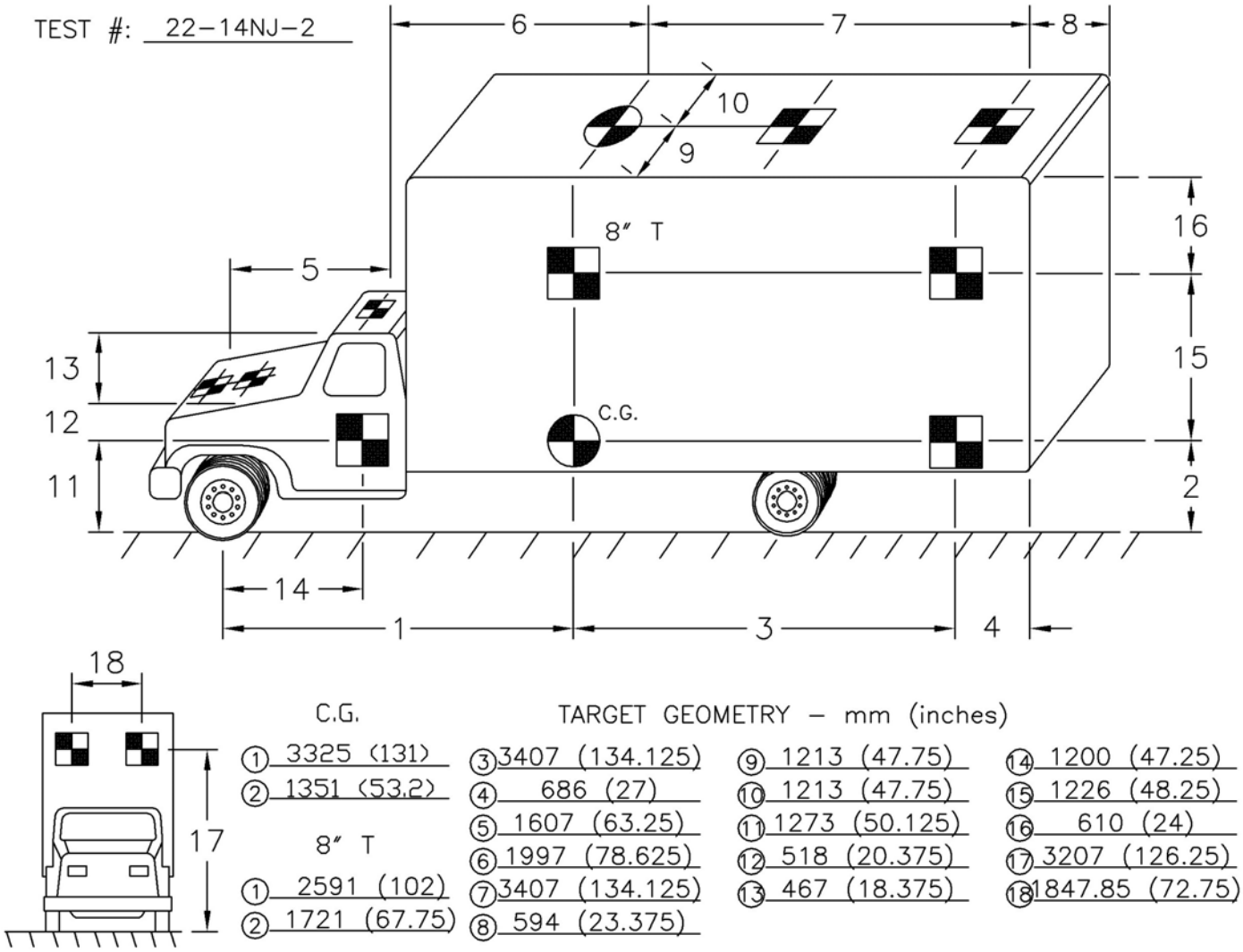

Figure 3. Vehicle Target Locations, Test 2214NJ-2

Hz. The environmental shock and vibration sensor/recorder system, Model EDR-4M6, was developed by Instrumented Sensor Technology (IST) of Okemos, Michigan and includes three differential channels as well as three single-ended channels. The EDR-4 was configured with 6 MB of RAM memory and a 1,500 Hz lowpass filter. Computer software, "DynaMax 1 (DM-1)" and "DADiSP", was used to analyze and plot the accelerometer data.

Another triaxial piezoresistive accelerometer system with a range of ±200 Gs was also used to measure the acceleration in the longitudinal, lateral, and vertical directions at a sample rate of 3,200 Hz. The environmental shock and vibration sensor/recorder system, Model EDR-3, was developed by Instrumental Sensor Technology (IST) of Okemos, Michigan. The EDR-3 was configured with 256 kB of RAM memory and a 1,120 Hz lowpass filter. Computer software, "DynaMax 1 (DM-1)" and "DADiSP", was used to analyze and plot the accelerometer data.

3.4.2 Rate Transducers

An Analog Systems 3-axis rate transducer with a range of 1,200 degrees/sec in each of the three directions (pitch, roll, and yaw) was used to measure the rates of motion of the test vehicle. The rate transducer was mounted inside the body of the EDR-4M6 and recorded data at 10,000 Hz to a second data acquisition board inside the EDR-4M6 housing. The raw data measurements were then downloaded, converted to the appropriate Euler angles for analysis, and plotted. Computer software, "DynaMax 1 (DM-1)" and "DADiSP", was used to analyze and plot the rate transducer data.

3.4.3 High-Speed Photography

For test 2214NJ-2, four high-speed AOS VITcam video cameras, all with operating speeds of 500 frames/sec, were used to film the crash test. Five Canon digital video cameras and two JVC

digital video cameras, with standard operating speeds of 29.97 frames/sec, were also used to film the crash test. Camera details and a schematic of all eleven camera locations for test 2214NJ-2 is shown in Figure 4. The AOS video videos were analyzed using the ImageExpress MotionPlus software and Redlake Motion Scope software. Actual camera speed and camera divergence factors were considered in the analysis of the high-speed film.

3.4.4 Pressure Tape Switches

For test 2214NJ-2, five pressure-activated tape switches, spaced at 2-m (6.56-ft) intervals, were used to determine the speed of the vehicle before impact. Each tape switch fired a strobe light which sent an electronic timing signal to the data acquisition system as the right-front tire of the test vehicle passed over it. Test vehicle speed was determined from electronic timing mark data recorded using TestPoint software. Strobe lights and high-speed film analysis are used only as a backup in the event that vehicle speed cannot be determined from the electronic data.

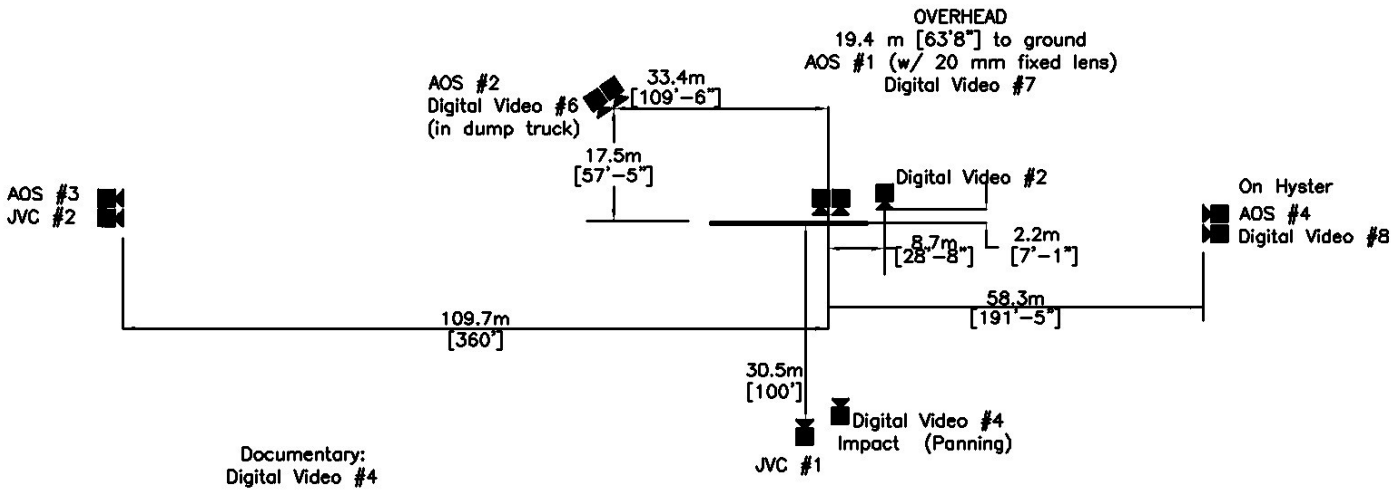

Figure 4. Location of High-Speed Cameras, Test 2214NJ-2

4 DESIGN DETAILS

The installation consisted of a reinforced, permanent New Jersey safety shape concrete barrier, as shown in Figures 5 through 8. The 36.58-m (120-ft) long half-section New Jersey shape barrier was 381 mm and 152 mm (15 in. and 6 in.) wide at the base and at the top, respectively, with an 813-mm (32-in.) top mounting height, as measured from the top of the concrete tarmac to the top of the barrier. The corresponding English-unit drawings are shown in Appendix A. Photographs of the test installation are shown in Figures 9 through 11.

The concrete used for the barrier consisted of Nebraska 47-BD Mix Type 3, with a minimum 28-day concrete compressive strength of 31.03 MPa (4,500 psi). The 21-day concrete compressive strength for the barrier, as determined from concrete cylinder testing, was found to be approximately 32.22 MPa (4,673 psi). A minimum concrete cover of 38 mm (1.5 in.) was used along the front and back sides of the barrier. A minimum concrete cover of 51 mm (2 in.) was used along the top of the vertical stirrups within the barrier. All the steel reinforcement in the barier was ASTM A615 Grade 60 rebar. The barrier reinforcement details are shown in Figures 5 through 9.

Barrier reinforcement consisted of No. 4 longitudinal bars and No. 5 bars for both the vertical stirrups and the barrier-to-tarmac angled and straight bars. Each of the eight longitudinal rebar measured 36.50 m (199 ft - 9 in.) long with minimum 305-mm (12-in.) long laps along each one. The vertical spacings of the lower, lower middle, upper middle, and upper longitudinal bars were 210 mm (8.25 in.), 387 mm (15.25 in.), 565 m (22.25 in.), and 743 mm (29.25 in.) from the ground to their centers, respectively. The vertical stirrups measured 1,422 mm (56 in.) long and were bent into a U-shape. Their longitudinal spacings were 203 mm (8 in.) on center, as shown in Figure 7. The barrier-to-tarmac attachment utilized straight bars and angled bars, which were bent into the

shape of the lower front face of the barrier, as shown in Figures 6 and 8. The straight bars utilized on the back face were 711 mm (28 in.) long, while the angled bars utilized on the front face were 787 mm (31 in.) long. The longitudinal spacing of these bars was also 203 mm (8 in.) on center, as shown in Figure 7. The transverse spacing of the straight and angled bars was 289 mm (11.375 in.) on center, as shown in Figure 6. The barrier-to-tarmac attachment bars were epoxied into the concrete to an embedment depth of 254 mm (10 in.), as shown in Figure 6. The epoxy used was the Fast Set Formula Power-Fast High Strength Epoxy Anchorage System.

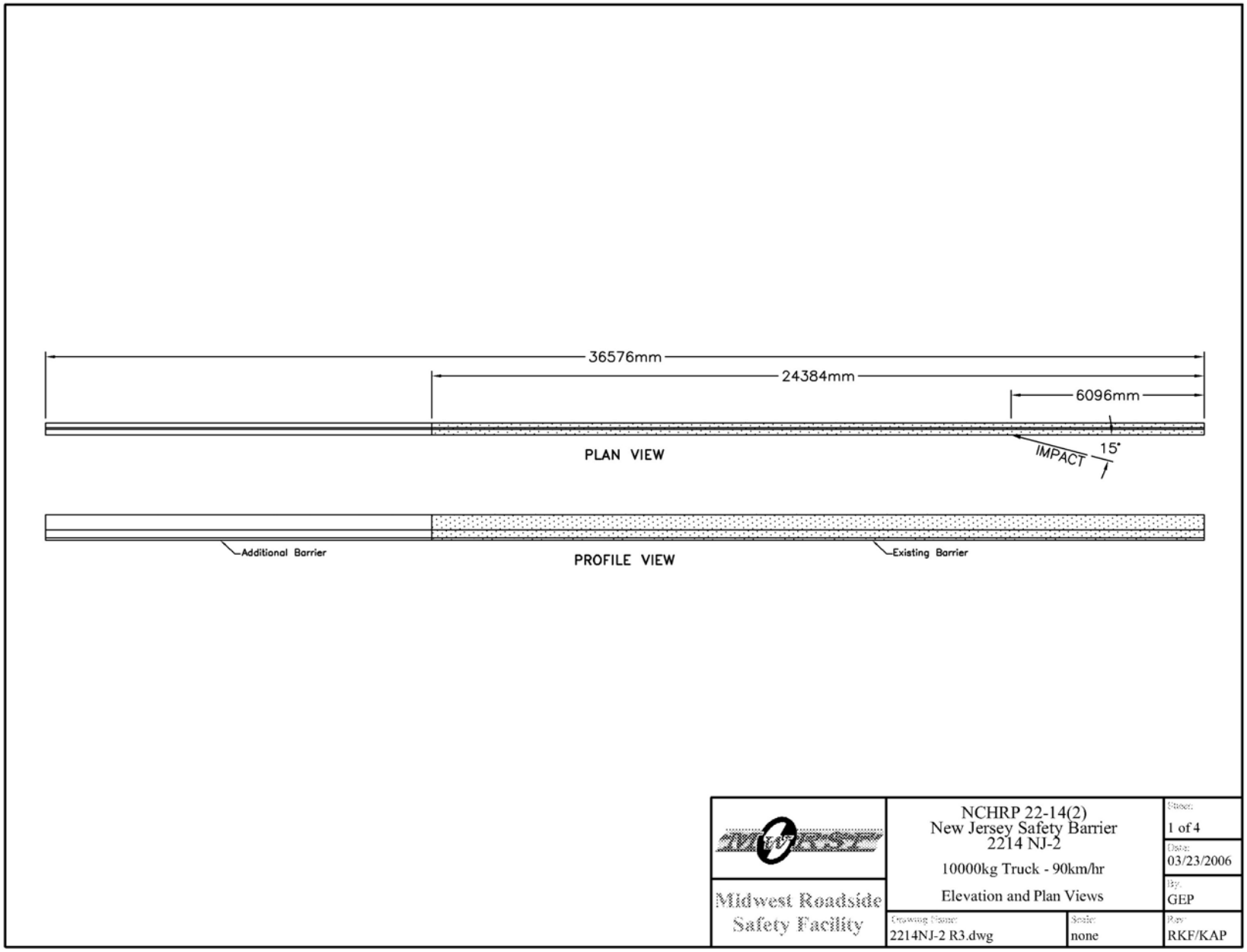

Figure 5. Layout of Permanent New Jersey Safety Shape Barrier

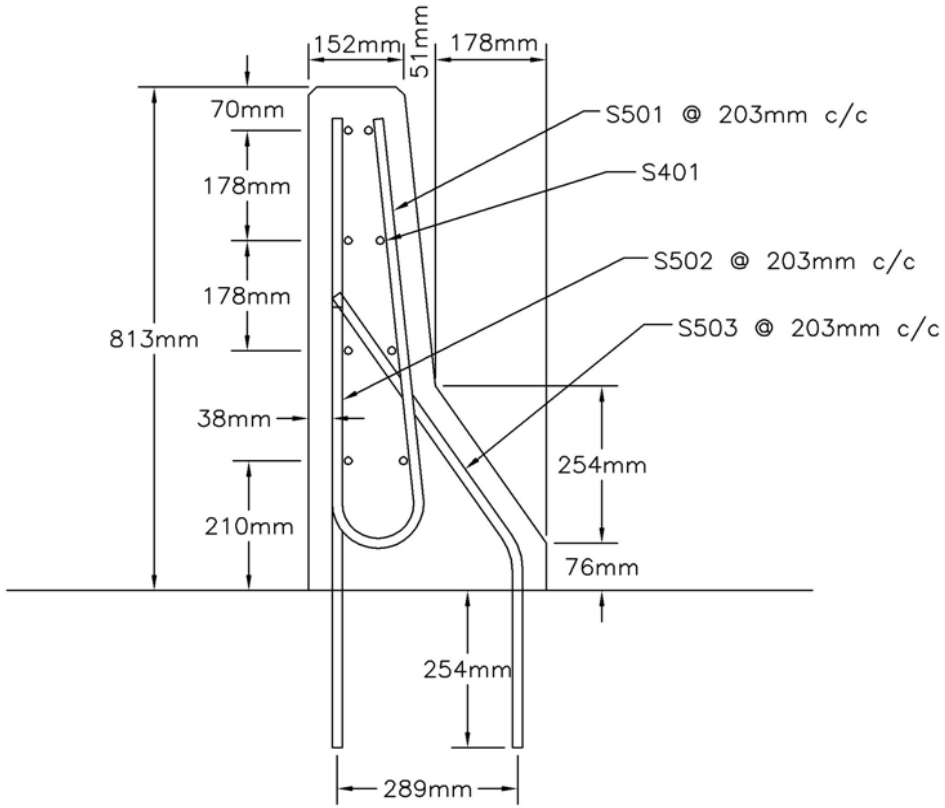

Note:
(1) Use 305mm minimum lap for No. 4 longitudinal bars.
(2) Use Grade 60 steel reinforcement.
(3) Use minimum 28-day concrete compressive strength of 31 MPa.
(4) 38mm cover front and back

Midwest Roadside Safety Facility	NCHRP 22-14(2) New Jersey Safety Barrier 2214 NJ-2 Cross Section		Sheet: 2 of 4
			Date: 03/23/2006
			By: GEP
	Drawing Name: 2214NJ-2 R3.dwg	Scale: 1=10	Rev: RKF/KAP

Figure 6. Permanent New Jersey Safety Shape Barrier Cross Section

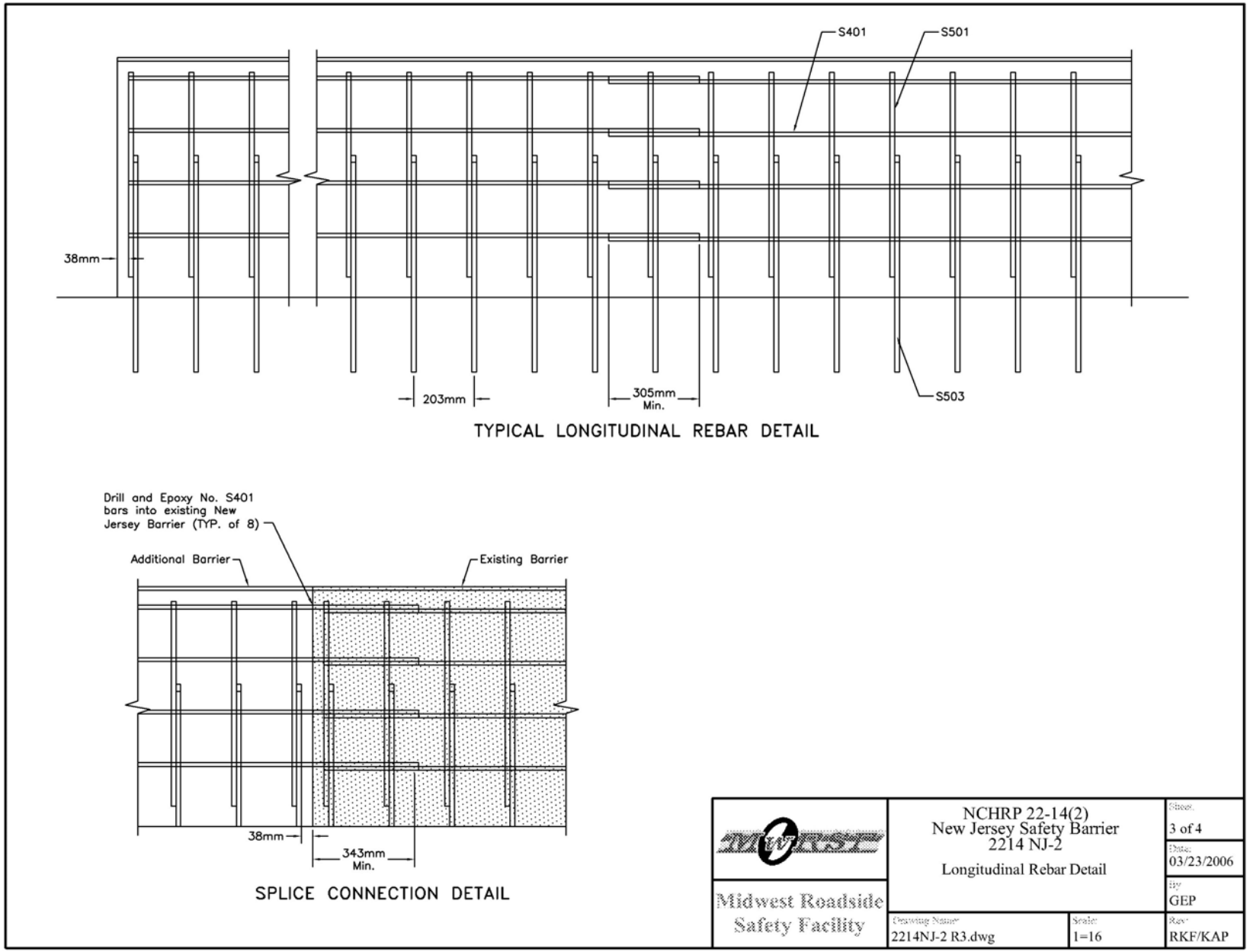

Figure 7. Permanent New Jersey Safety Shape Barrier Reinforcement Layout Details

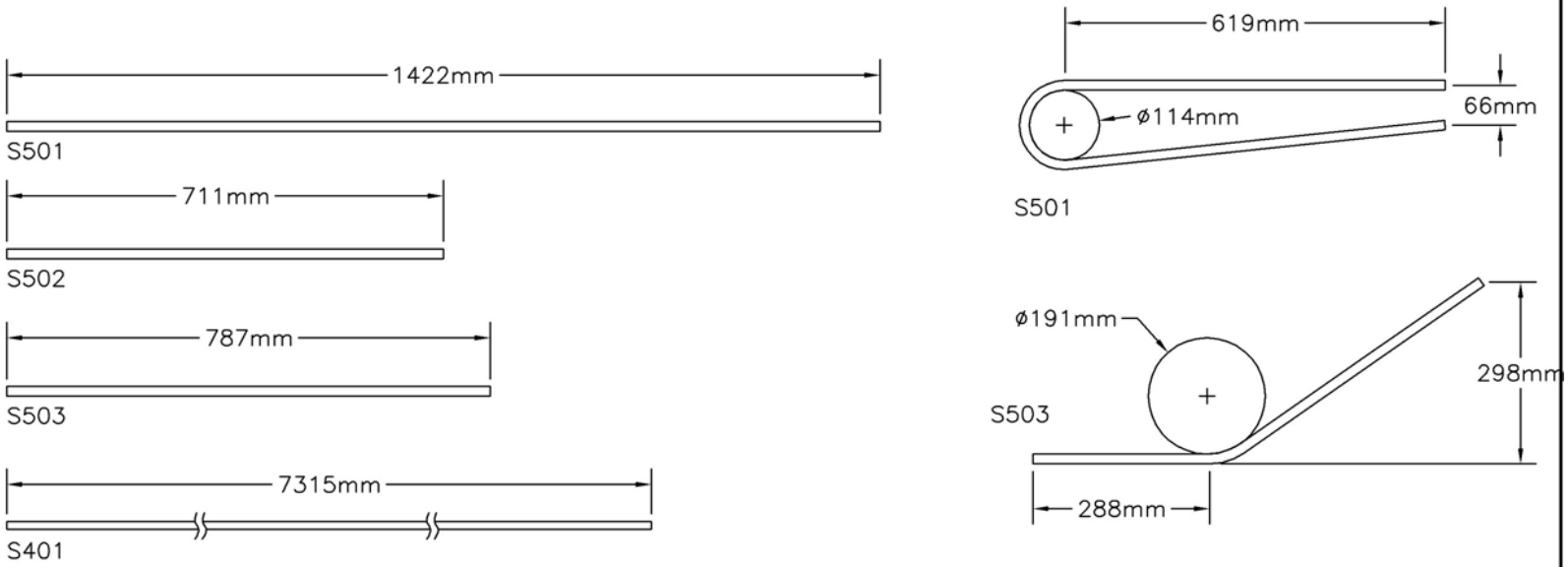

BILL OF BARS – ADDITIONAL 40ft SECTION						
Mark	Bar No.	No.	Length		Pin Dia.	Hook Length
S501	5	47	4'–8"		4½"	
S502	5	47	2'–4"			
S503	5	47	2'–7"		7½"	
S401	4	16	24'			
BILL OF BARS – TOTAL 120ft SECTION						
Mark	Bar No.	No.	Length		Pin Dia.	Hook Length
S501	5	139	4'–8"		4½"	
S502	5	139	2'–4"			
S503	5	139	2'–7"		7½"	
S401	4	40	24'			

Midwest Roadside Safety Facility

NCHRP 22-14(2)
New Jersey Safety Barrier
2214 NJ-2
Bar Detail

Sheet: 4 of 4
Date: 03/23/2006
By: GEP
Drawing Name: 2214NJ-2 R3.dwg
Scale: 1=10
Rev: RKF/KAP

Figure 8. Permanent New Jersey Safety Shape Barrier Reinforcement Details

Figure 9. Permanent New Jersey Safety Shape Barrier System Reinforcement

Figure 10. Permanent New Jersey Safety Shape Barrier System Construction

Figure 11. Permanent New Jersey Safety Shape Barrier System

5 CRASH TEST

5.1 Test 2214NJ-2

The 9,999-kg (22,045-lb) single unit truck impacted the permanent New Jersey shape barrier system at a speed of 90.9 km/h (56.5 mph) and at an angle of 16.2 degrees. A summary of the test results and sequential photographs are shown in Figure 12. The summary of the test results and sequential photographs in English units are shown in Appendix B. Additional sequential photographs are shown in Figures 13 through 15. Documentary photographs of the crash test are shown in Figures 16 and 17.

5.2 Test Description

Initial vehicle impact was to occur 6.10 m (20 ft) downstream from the upstream end of the barrier, as shown in Figure 18. Actual vehicle impact occurred at the targeted impact. At 0.064 sec after impact, the vehicle began to redirect. At 0.084 sec, the right-front corner of the vehicle protruded over the top of the barrier. At 0.120 sec, the cab portion of the vehicle encountered counter-clockwise (CCW) roll away from the barrier. At this same time, the right side of the cab rode on top of the barrier and the box contacted the barrier. At 0.140 sec, the cab and box twisted while the box rolled clockwise (CW) toward the barrier. At 0.220 sec, the rear of the box redirected into the barrier as the cab continued to slide along the top of the barrier. At 0.264 sec, the CW roll of the box increased significantly. At 0.310 sec, the roll of the cab ceased. At 0.410 sec, the left-rear tire was airborne. At 0.470 sec, the entire truck rolled CW over the top of the barrier. At 0.526 sec, the left-front tire became airborne. At 0.758 sec, the front axle disengaged from the truck. At 0.850 sec, all tires were airborne. At 1.202 sec, the vehicle had rolled CW to a position of the right side being parallel to the ground. At 1.342 sec, the right side of the vehicle contacted the ground behind

the barrier. At The vehicle came to rest on its side 74.33 m (245 ft - 9 in.) downstream from impact and 1.88 m (2 ft - 1 in.) laterally behind the concrete barrier system. The trajectory and final position of the single unit truck are shown in Figures 12 and 19.

5.3 Barrier Damage

Damage to the barrier was minimal, as shown in Figures 20 through 22. Barrier damage consisted of contact and gouge marks. The length of vehicle contact along the concrete barrier system was approximately 31.29 m (102 ft - 8 in.), which spanned from 5,283 mm (208 in.) downstream from the upstream end of the barrier through the downstream end of the barrier.

A 368-mm (14.5-in.) long tire mark was found on the lower face of the barrier. Another tire mark began 9.14 m (30 ft) upstream from the downstream end of the barrier. A 279-mm (11-in.) wide by 229-mm (9-in.) high by 13-mm (0.5-in.) deep wheel gouge began at the targeted impact point. The center of a 406-mm (16-in.) wide by 203-mm (8-in.) high by 6-mm (0.25-in.) deep wheel gouge was located at 635 mm (25 in.) downstream from the targeted impact point. The center of a 356-mm (14-in.) wide by 229-mm (9-in.) high by 13-mm (0.5-in.) deep wheel gouge was located at 1,245 mm (49 in.) downstream from the targeted impact point. Spalling on the back side of the barrier began 6.71 m (22 ft) downstream from the impact point and continued to the end of the barrier. Minor spalling was located on the top front side of the barrier at 7.62 m (25 ft) downstream from the targeted impact point. The front side of the barrier also encountered spalling which began 6.10 m (20 ft) upstream from the downstream end of the barrier and continued through the end of the barrier. The permanent set of the barrier system was negligible.

5.4 Vehicle Damage

Exterior vehicle damage was extensive, as shown in Figures 23 through 26. Occupant compartment deformations to the right side and center of the floorboard were judged insufficient to cause serious injury to the vehicle occupants. Complete occupant compartment deformations and the corresponding locations are provided in Appendix C.

Damage was concentrated on the right side of the vehicle. The right-front quarter panel was deformed inward toward the engine compartment. The right side of the front bumper was flattened and bent back toward the engine compartment. The left side of the front bumper was also deformed inward toward the engine compartment. The right-front fuel tank was severely dented. The right-front exhaust disengaged from the truck and was dented. The bracket attaching the right-right front exhaust was bent backward 90 degrees. The right side of the frame buckled at the front flange and was bent and twisted near the rear end. The front axle and drive shaft disengaged from the truck. Scratches and contact marks were found along the entire right side. The hood deformed slightly. The third and fourth U-bolts attaching the cargo box to the frame fractured. The cargo box frame at the rear axle was bent backward. The top rear of the cargo box encountered minor buckling. Contact marks were found on the bottom of the cargo box and the steel cross beams were deformed. The right leaf spring disengage at the front of the rear tire. The right-rear inside tire encountered a severe gouge. The right-front mirror was broken. All window glass remained undamaged.

5.5 Occupant Risk Values

The longitudinal and lateral occupant impact velocities were determined to be -1.99 m/s (-6.53 ft/s) and -4.15 m/s (-13.62 ft/s), respectively. The maximum 0.010-sec average occupant ridedown decelerations in the longitudinal and lateral directions were -22.39 Gs and -8.84 Gs,

respectively. The results of the occupant risk, as determined from the accelerometer data, are summarized in Figure 12. Results are shown graphically in Appendix D. The results from the rate transducer are shown graphically in Appendix D.

5.6 Discussion

The analysis of the test results for test no. 2214NJ-2 showed that the permanent New Jersey safety shape concrete barrier system impacted with the 10000S vehicle of the Update to NCHRP Report No. 350 did not adequately contain the vehicle on the traffic-side face of the barrier system. It also did not safely redirect the vehicle since the vehicle did not remain upright after collision with the barrier. There were no detached elements nor fragments which showed potential for penetrating the occupant compartment nor presented undue hazard to other traffic. Deformations of, or intrusion into, the occupant compartment that could have caused serious injury did not occur. After collision, the vehicle did not exit the barrier as it rolled over the top of the barrier. Therefore, test no. 2214NJ-2 conducted on the permanent New Jersey safety shape concrete barrier system was determined to be unacceptable according to the TL-4 safety performance criteria found in Update to NCHRP Report No. 350 due to vehicle penetration and rollover the top of the barrier.

0.000 sec | 0.140 sec | 0.284 sec | 0.366 sec | 0.526 sec

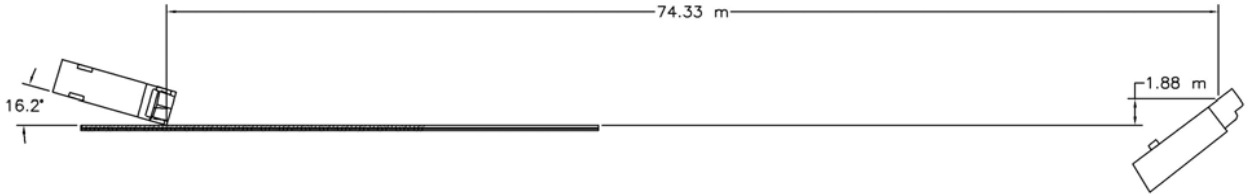

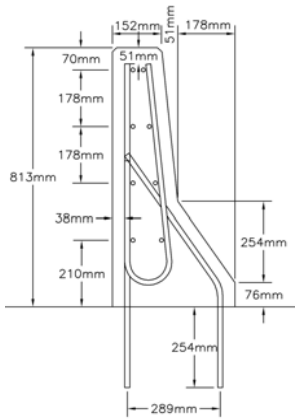

- Test Agency . . . . . MwRSF
- Test Number 2214NJ-2
- Date 4/13/06
- NCHRP 350 Update Test Designation . . 4-12
- Appurtenance . . . . . Permanent New Jersey Safety Shape Barrier
- Total Length . . . . . 36.58 m
- Key Elements - Barrier
  - Description . . . . . Half-Section New Jersey Shape Barrier
  - Base Width . . . . . 381 mm
  - Height . . . . . 813 mm
  - Concrete Material . . . . . Nebraska 47-BD Mix
  - Reinforcing Steel Material . . . . . Grade 60 Rebar
- Type of Soil . . . . . NA
- Test Vehicle
  - Type/Designation 10000S
  - Make and Model . . . . . 1989 Ford F-800
  - Curb . . . . . 5,439 kg
  - Test Inertial . . . . . 9,999 kg
  - Gross Static . . . . . 9,999 kg
- Impact Conditions
  - Speed . . . . . 90.9 km/h
  - Angle . . . . . 16.2 degrees
  - Impact Location . . . . . 6.10 m downstream from upstream end
- Exit Conditions
  - Speed . . . . . NA
  - Angle . . . . . NA
  - Exit Box Criterion . . . . . Fail
- Post-Impact Trajectory
  - Vehicle Stability . . . . . Unsatisfactory
  - Stopping Distance . . . . . 74.33 m downstream
    1.88 m laterally behind
- Occupant Impact Velocity (350 Update)
  - Longitudinal (not required) . . . . . -1.99 m/s
  - Lateral (not required) . . . . . -4.15 m/s
- Occupant Ridedown Deceleration (350 Update)
  - Longitudinal (not required) . . . . . -22.39 Gs
  - Lateral (not required) . . . . . -8.84 Gs
- THIV (not required) . . . . . NA
- PHD (not required) . . . . . NA
- Test Article Damage . . . . . Minimal
- Test Article Deflections
  - Permanent Set . . . . . NA
  - Dynamic . . . . . NA
  - Working Width . . . . . NA
- Vehicle Damage . . . . . Extensive (rollover)
  - VDS[5] . . . . . 1-RFQ-5 & 1-RD-6
  - CDC[6] 1-RDAS9
  - Maximum Deformation . . . . . NA

Figure 12. Summary of Test Results and Sequential Photographs, Test 2214NJ-2

0.000 sec

0.000 sec

0.282 sec

0.154 sec

0.482 sec

0.310 sec

0.702 sec

0.590 sec

1.042 sec

1.070 sec

1.242 sec

1.390 sec

Figure 13. Additional Sequential Photographs, Test 2214NJ-2

0.000 sec

0.000 sec

0.208 sec

0.300 sec

0.430 sec

0.501 sec

0.768 sec

0.801 sec

1.028 sec

1.435 sec

Figure 14. Additional Sequential Photographs, Test 2214NJ-2

0.000 sec

0.000 sec

0.267 sec

0.234 sec

0.434 sec

0.400 sec

0.701 sec

0.667 sec

1.101 sec

0.801 sec

Figure 15. Additional Sequential Photographs, Test 2214NJ-2

Figure 16. Documentary Photographs, Test 2214NJ-2

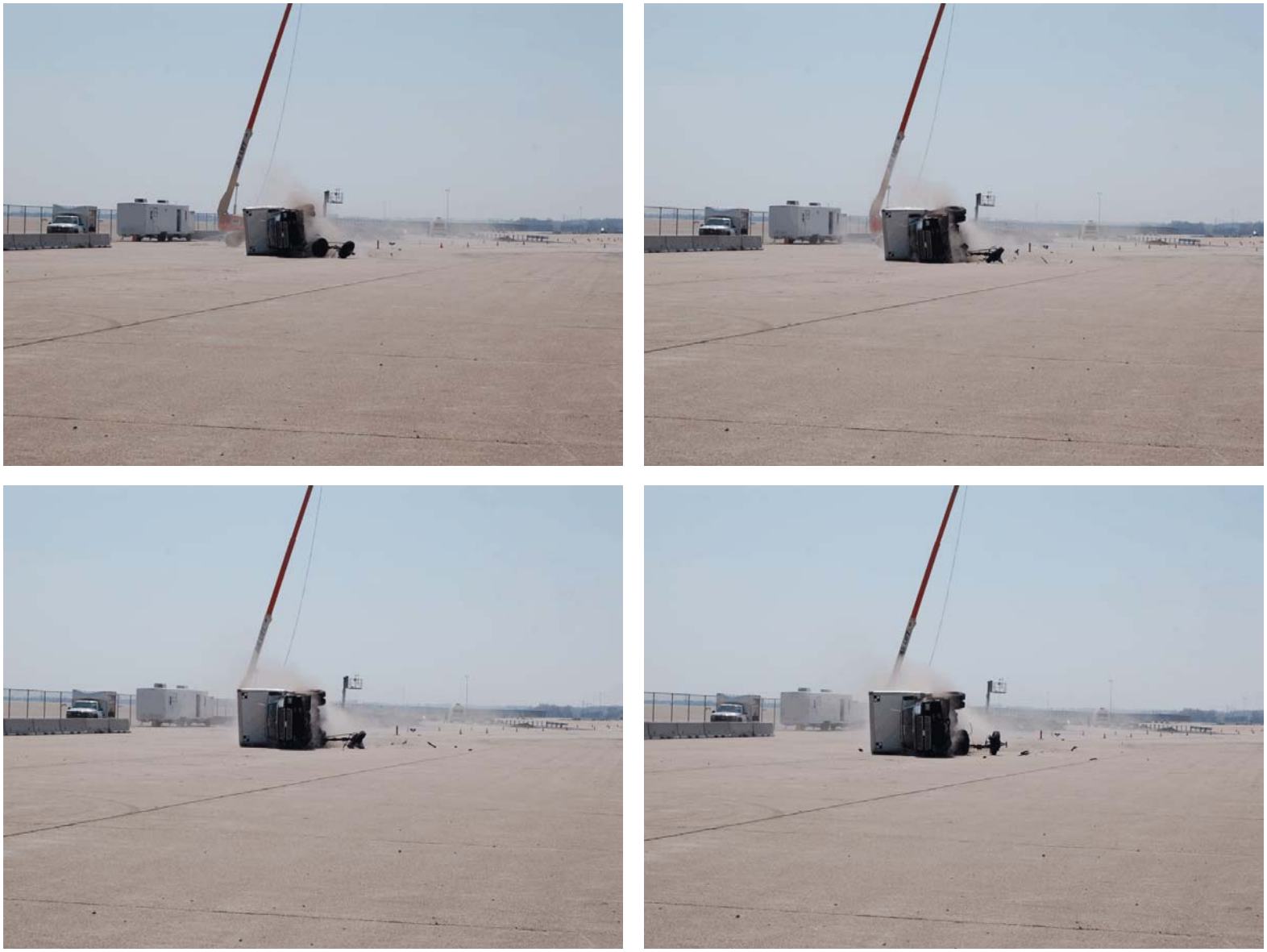

Figure 17. Documentary Photographs, Test 2214NJ-2

Figure 18. Impact Location, Test 2214NJ-2

Figure 19. Vehicle Final Position and Trajectory Marks, Test 2214NJ-2

Figure 20. Permanent New Jersey Safety Shape Barrier Damage, Test 2214NJ-2

Figure 21. Permanent New Jersey Safety Shape Barrier Damage, Test 2214NJ-2

Figure 22. Permanent New Jersey Safety Shape Barrier Damage, Test 2214NJ-2

Figure 23. Vehicle Damage, Test 2214NJ-2

Figure 24. Vehicle Damage, Test 2214NJ-2

Figure 25. Vehicle Undercarriage Damage, Test 2214NJ-2

Figure 26. Vehicle Cargo Box Interior Damage, Test 2214NJ-2

6 SUMMARY AND CONCLUSIONS

A permanent New Jersey safety shape barrier was constructed and full-scale vehicle crash tested. One full-scale vehicle crash test, using a single unit truck, was performed on the longitudinal barrier system and was determined to be unacceptable according to the TL-4 safety performance criteria presented in the Update to NCHRP Report No. 350. During the 10000S crash test, the vehicle rolled over the top of the barrier and came to rest on its side behind the barrier. A summary of the safety performance evaluation is provided in Table 3.

Table 3. Summary of Safety Performance Evaluation Results

Evaluation Factors	Evaluation Criteria		Test 2214NJ-2
Structural Adequacy	A.	Test article should contain and redirect the vehicle or bring the vehicle to a controlled stop; the vehicle should not penetrate, underride, or override the installation although controlled lateral deflection of the test article is acceptable.	U
Occupant Risk	D.	Detached elements, fragments or other debris from the test article should not penetrate or show potential for penetrating the occupant compartment, or present an undue hazard to other traffic, pedestrians, or personnel in a work zone. Deformations of, or intrusions into, the occupant compartment should not exceed limits set forth in Section 5.3 and Appendix E of the Update to NCHRP Report No. 350.	S
	G.	It is preferable, although not essential, that the vehicle remain upright during and after collision.	U
Vehicle Trajectory	M.	After impact, the vehicle shall exit the barrier within the exit box.	U

S - Satisfactory
U - Unsatisfactory
NA - Not Available

7 REFERENCES

1. Ross, H.E., Sicking, D.L., Zimmer, R.A., and Michie, J.D., *Recommended Procedures for the Safety Performance Evaluation of Highway Features*, National Cooperative Research Program (NCHRP) Report No. 350, Transportation Research Board, Washington, D.C., 1993.

2. Sicking, D.L., Mak, K.K., and Rohde, J.R., *NCHRP Report No. 350 Update - Chapters 1 through 7, Draft Report*, Presented to the Transportation Research Board, Prepared by the Midwest Roadside Safety Facility, University of Nebraska-Lincoln, July 2005 [Privileged Document].

3. Hinch, J., Yang, T.L., and Owings, R., *Guidance Systems for Vehicle Testing*, ENSCO, Inc., Springfield, VA, 1986.

4. *Center of Gravity Test Code - SAE J874 March 1981*, SAE Handbook Vol. 4, Society of Automotive Engineers, Inc., Warrendale, Pennsylvania, 1986.

5. *Vehicle Damage Scale for Traffic Investigators*, Second Edition, Technical Bulletin No. 1, Traffic Accident Data (TAD) Project, National Safety Council, Chicago, Illinois, 1971.

6. *Collision Deformation Classification - Recommended Practice J224 March 1980*, Handbook Volume 4, Society of Automotive Engineers (SAE), Warrendale, Pennsylvania, 1985.

8 APPENDICES

APPENDIX A

English-Unit System Drawings

Figure A-1. Layout of Permanent New Jersey Safety Shape Barrier (English)

Figure A-2. Permanent New Jersey Safety Shape Barrier Design Details (English)

Figure A-3. Permanent New Jersey Safety Shape Barrier Details (English)

Figure A-4. Permanent New Jersey Safety Shape Barrier Bill of Bars (English)

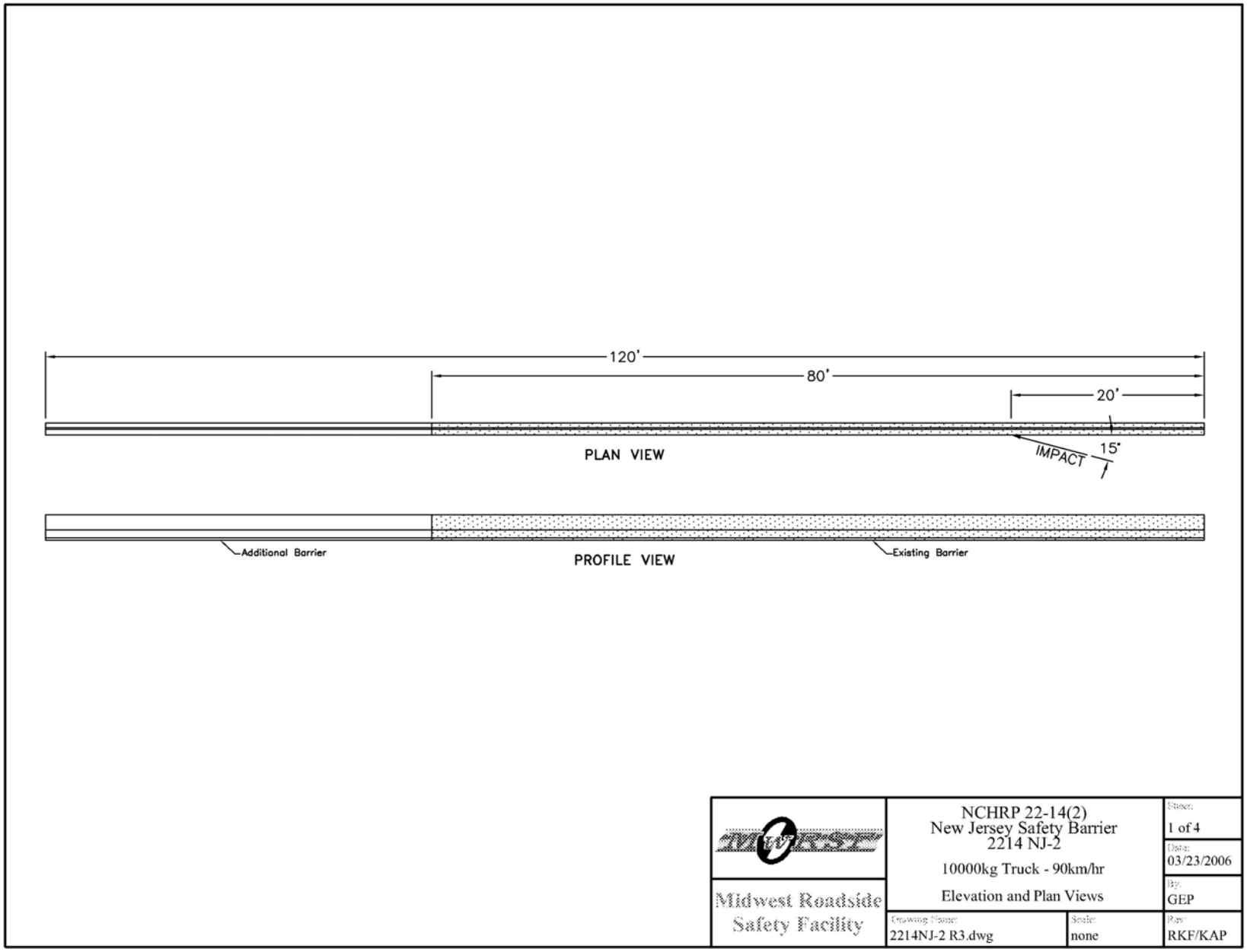

Figure A-1. Layout of Permanent New Jersey Safety Shape Barrier (English)

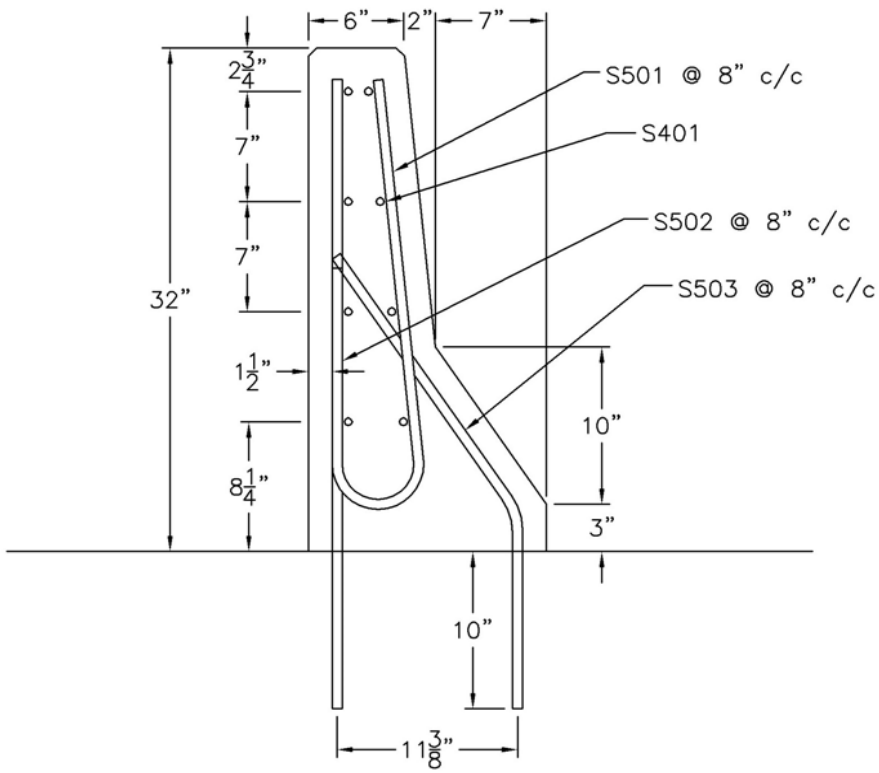

Note:
(1) Use 12" minimum lap for No. 4 longitudinal bars.
(2) Use Grade 60 steel reinforcement.
(3) Use minimum 28-day concrete compressive strength of 4,500 psi.
(4) 1½" cover front and back

Midwest Roadside Safety Facility	NCHRP 22-14(2) New Jersey Safety Barrier 2214 NJ-2 Cross Section	Sheet: 2 of 4 Date: 03/23/2006 By: GEP
	Drawing Name: 2214NJ-2 R3.dwg Scale: 1=10	Rev: RKF/KAP

Figure A-2. Permanent New Jersey Safety Shape Barrier Cross Section (English)

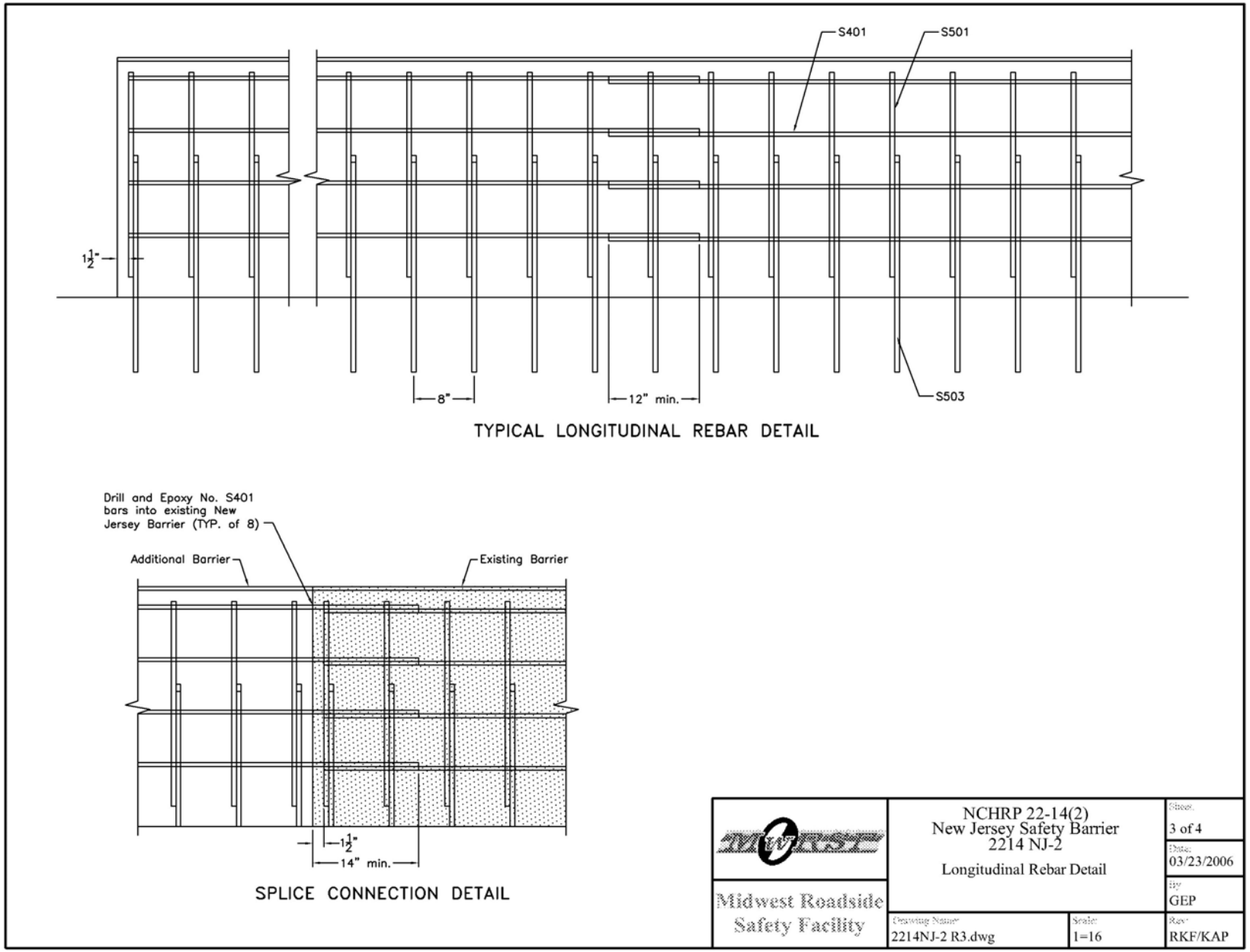

Figure A-3. Permanent New Jersey Safety Shape Barrier Reinforcement Layout Details (English)

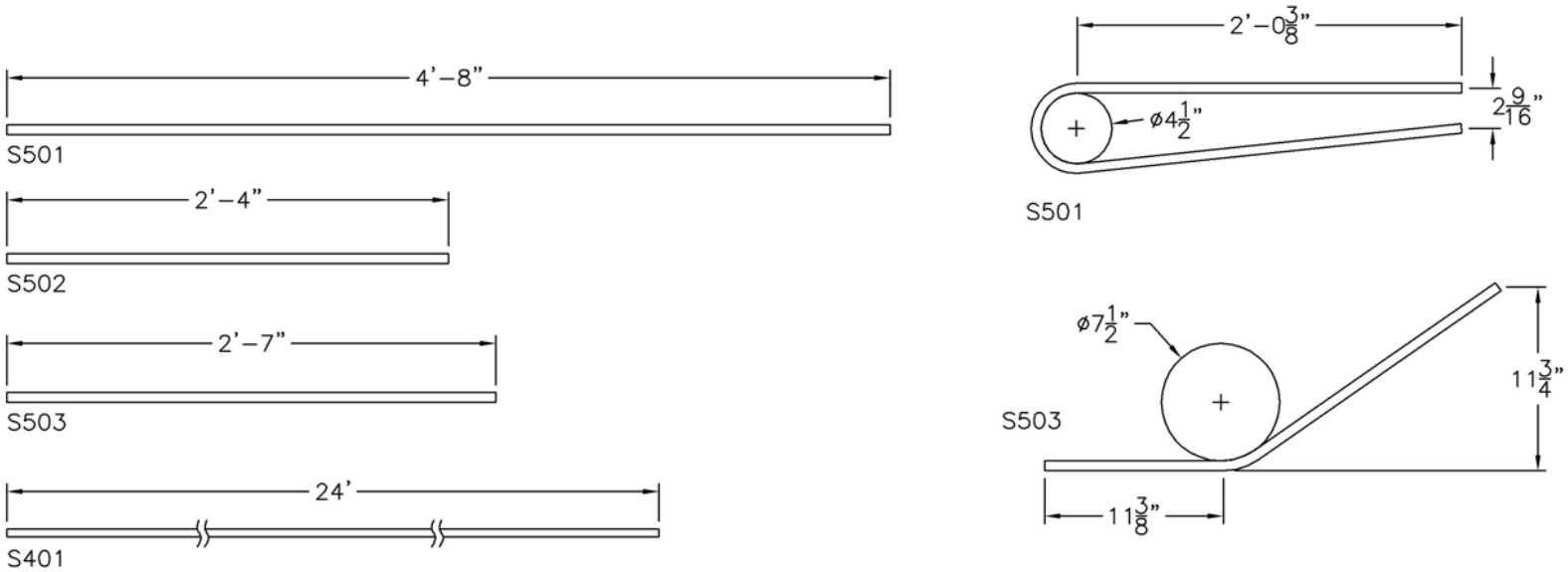

BILL OF BARS – ADDITIONAL 40ft SECTION						
Mark	Bar No.	No.	Length		Pin Dia.	Hook Length
S501	5	47	4'–8"		4½"	
S502	5	47	2'–4"			
S503	5	47	2'–7"		7½"	
S401	4	16	24'			

BILL OF BARS – TOTAL 120ft SECTION						
Mark	Bar No.	No.	Length		Pin Dia.	Hook Length
S501	5	139	4'–8"		4½"	
S502	5	139	2'–4"			
S503	5	139	2'–7"		7½"	
S401	4	40	24'			

Midwest Roadside Safety Facility

NCHRP 22-14(2)
New Jersey Safety Barrier
2214 NJ-2

Bar Detail

Sheet: 4 of 4
Date: 03/23/2006
By: GEP
Drawing Name: 2214NJ-2 R3.dwg
Scale: 1=10
Rev: RKF/KAP

Figure A-4. Permanent New Jersey Safety Shape Barrier Reinforcement Details (English)

APPENDIX B

Test Summary Sheet in English Units

Figure B-1. Summary of Test Results and Sequential Photographs (English), Test 2214NJ-2

0.000 sec | 0.140 sec | 0.284 sec | 0.366 sec | 0.526 sec

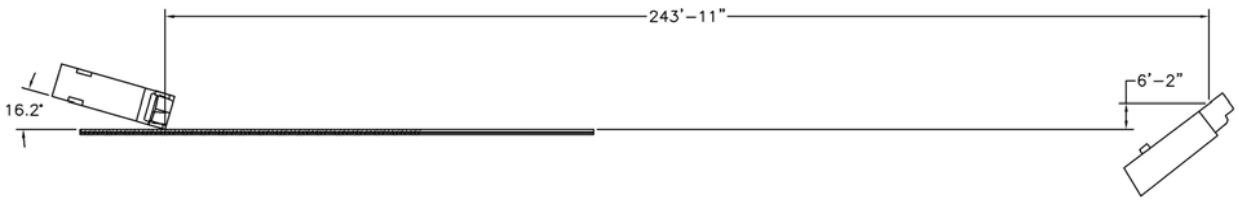

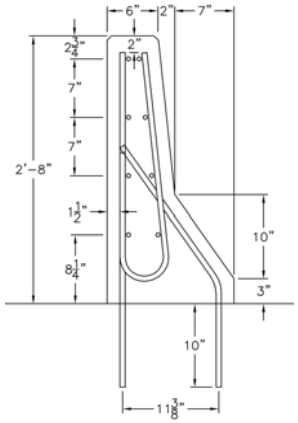

- Test Agency . . . . . MwRSF
- Test Number 2214NJ-2
- Date 4/13/06
- NCHRP 350 Update Test Designation . . 4-12
- Appurtenance . . . . . Permanent New Jersey Safety Shape Barrier
- Total Length . . . . . 120 ft
- Key Elements - Barrier
  - Description . . . . . Half-Section New Jersey Shape Barrier
  - Base Width . . . . . 15 in.
  - Height . . . . . 32 in.
  - Concrete Material . . . . . Nebraska 47-BD Mix
  - Reinforcing Steel Material . . . . . Grade 60 Rebar
- Type of Soil . . . . . NA
- Test Vehicle
  - Type/Designation 10000S
  - Make and Model . . . . . 1989 Ford F-800
  - Curb . . . . . 11,990 lbs
  - Test Inertial . . . . . 22,045 lbs
  - Gross Static . . . . . 22,045 lbs
- Impact Conditions
  - Speed . . . . . 56.5 mph
  - Angle . . . . . 16.2 degrees
  - Impact Location . . . . . 20 ft downstream from upstream end
- Exit Conditions
  - Speed . . . . . NA
  - Angle . . . . . NA
  - Exit Box Criterion . . . . . Fail
- Post-Impact Trajectory
  - Vehicle Stability . . . . . Unsatisfactory
  - Stopping Distance . . . . . 243 ft - 11 in. downstream
    6 ft - 2 in. laterally behind
- Occupant Impact Velocity (350 Update)
  - Longitudinal (not required) . . . . . -6.53 ft/s
  - Lateral (not required) . . . . . -13.62 ft/s
- Occupant Ridedown Deceleration (350 Update)
  - Longitudinal (not required) . . . . . -22.39 Gs
  - Lateral (not required) . . . . . -8.84 Gs
- THIV (not required) . . . . . NA
- PHD (not required) . . . . . NA
- Test Article Damage . . . . . Minimal
- Test Article Deflections
  - Permanent Set . . . . . NA
  - Dynamic . . . . . NA
  - Working Width . . . . . NA
- Vehicle Damage . . . . . Extensive (rollover)
  - VDS[5] . . . . . 1-RFQ-5 & 1-RD-6
  - CDC[6] 1-RDAS9
  - Maximum Deformation . . . . . NA

Figure B-1. Summary of Test Results and Sequential Photographs, Test 2214NJ-2

APPENDIX C

Occupant Compartment Deformation Data, Test 2214NJ-2

Figure C-1. Occupant Compartment Deformation Index (OCDI), Test 2214NJ-2

Occupant Compartment Deformation Index (OCDI)

Test No. 2214NJ-2
Vehicle Type: 10000s (Ford F-800)

OCDI = XXABCDEFGHI

XX = location of occupant compartment deformation

A = distance between the dashboard and a reference point at the rear of the occupant compartment, such as the top of the rear seat or the rear of the cab on a pickup

B = distance between the roof and the floor panel

C = distance between a reference point at the rear of the occupant compartment and the motor panel

D = distance between the lower dashboard and the floor panel

E = interior width

F = distance between the lower edge of right window and the upper edge of left window

G = distance between the lower edge of left window and the upper edge of right window

H= distance between bottom front corner and top rear corner of the passenger side window

I= distance between bottom front corner and top rear corner of the driver side window

Severity Indices

0 - if the reduction is less than 3%
1 - if the reduction is greater than 3% and less than or equal to 10 %
2 - if the reduction is greater than 10% and less than or equal to 20 %
3 - if the reduction is greater than 20% and less than or equal to 30 %
4 - if the reduction is greater than 30% and less than or equal to 40 %

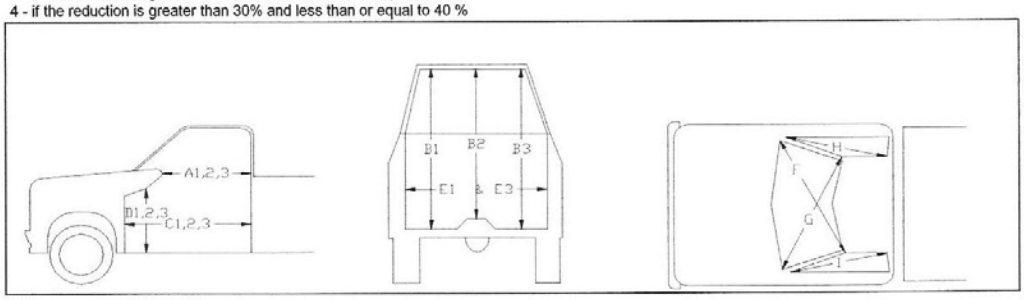

where,
1 = Passenger Side
2 = Middle
3 = Driver Side

Location:

Measurement	Pre-Test (in.)	Post-Test (in.)	Change (in.)	% Difference	Severity Index
A1	40.00	40.25	0.25	0.63	0
A2	40.00	39.75	-0.25	-0.63	0
A3	42.50	42.00	-0.50	-1.18	0
B1	49.00	48.50	-0.50	-1.02	0
B2	44.75	45.00	0.25	0.56	0
B3	48.50	50.50	2.00	4.12	1
C1	53.75	53.75	0.00	0.00	0
C2	44.00	44.50	0.50	1.14	0
C3	50.75	50.25	-0.50	-0.99	0
D1	17.25	17.25	0.00	0.00	0
D2	9.25	9.75	0.50	5.41	1
D3	18.00	17.75	-0.25	-1.39	0
E1	61.25	63.00	1.75	2.86	0
E3	67.00	67.00	0.00	0.00	0
F	60.00	60.00	0.00	0.00	0
G	58.50	58.50	0.00	0.00	0
H	38.00	37.75	-0.25	-0.66	0
I	39.25	39.00	-0.25	-0.64	0

Note: Maximum sevrity Index for each variable (A-I) is used for determination of final OCDI value

	RF	A	B	C	D	E	F	G	H	I
Final OCDI:		0	1	0	1	0	0	0	0	0

Figure C-1. Occupant Compartment Deformation Index (OCDI), Test 2214NJ-2

APPENDIX D

Accelerometer and Rate Transducer Data Analysis, Test 2214NJ-2

Figure D-1. Graph of Longitudinal Deceleration, Test 2214NJ-2

Figure D-2. Graph of Longitudinal Occupant Impact Velocity, Test 2214NJ-2

Figure D-3. Graph of Longitudinal Occupant Displacement, Test 2214NJ-2

Figure D-4. Graph of Lateral Deceleration, Test 2214NJ-2

Figure D-5. Graph of Lateral Occupant Impact Velocity, Test 2214NJ-2

Figure D-6. Graph of Lateral Occupant Displacement, Test 2214NJ-2

Figure D-7. Graph of Roll, Pitch, and Yaw Angular Displacements, Test 2214NJ-2

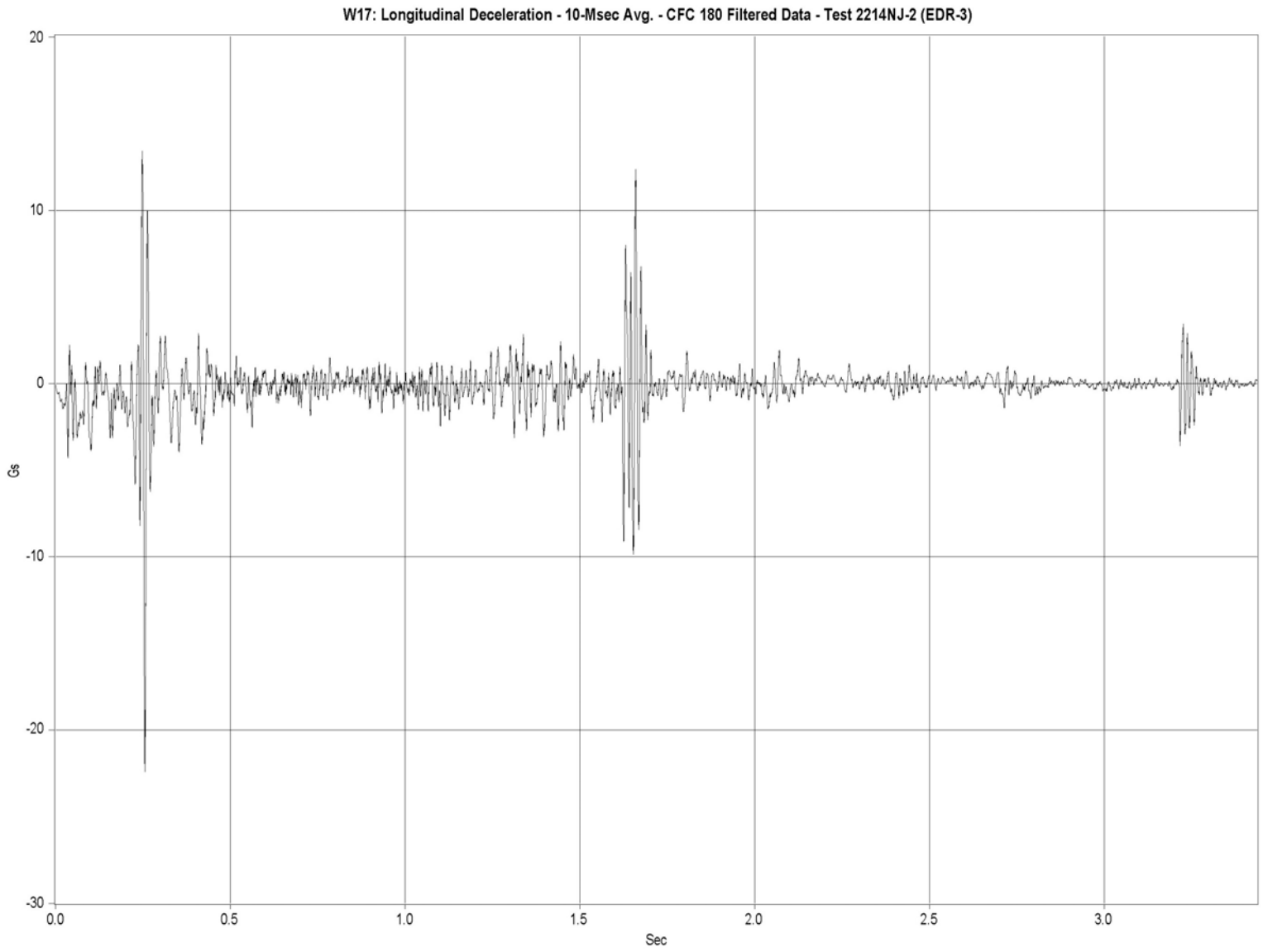

Figure D-1. Graph of Longitudinal Deceleration, Test 2214NJ-2

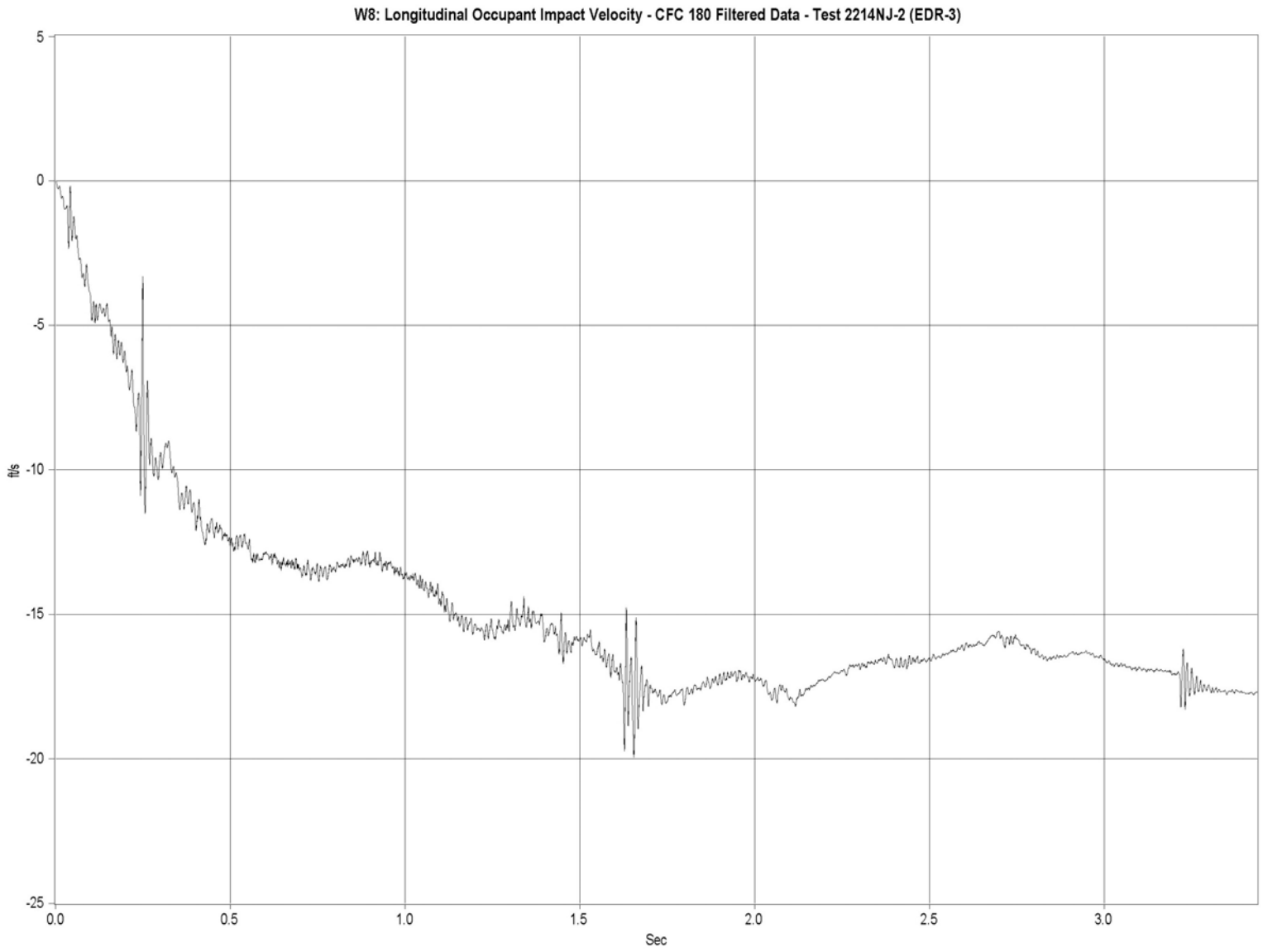

Figure D-2. Graph of Longitudinal Occupant Impact Velocity, Test 2214NJ-2

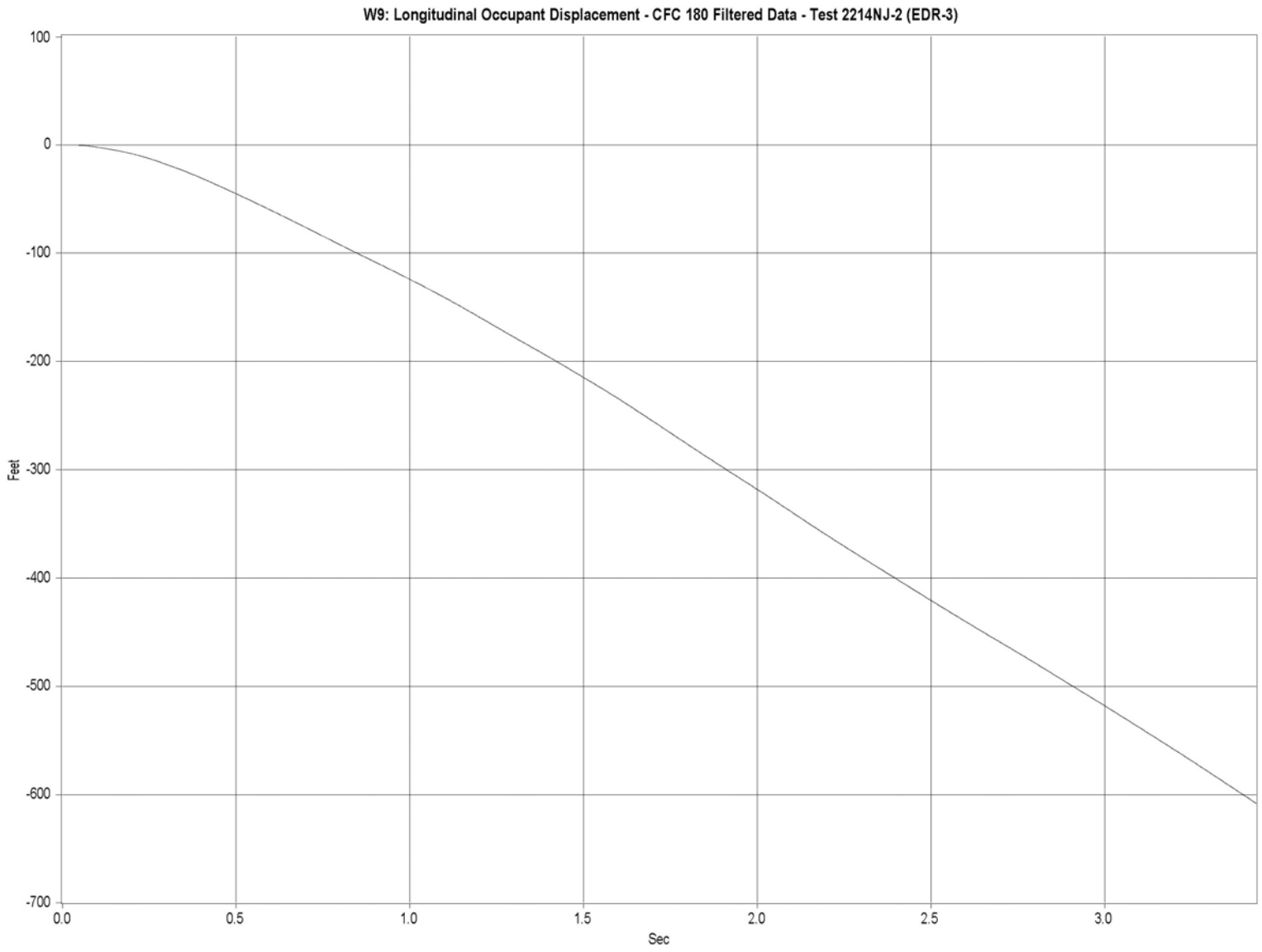

Figure D-3. Graph of Longitudinal Occupant Displacement, Test 2214NJ-2

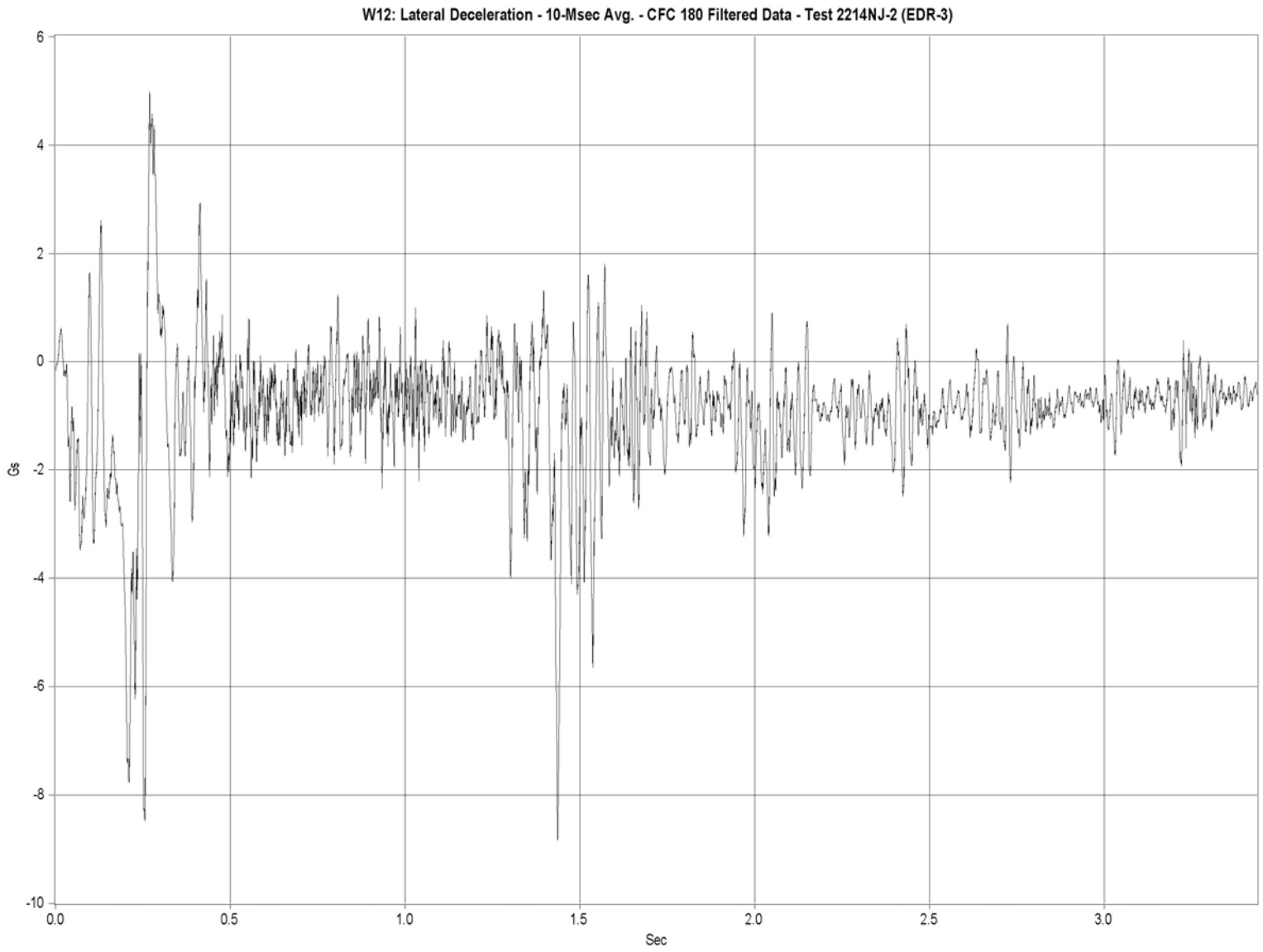

Figure D-4. Graph of Lateral Deceleration, Test 2214NJ-2

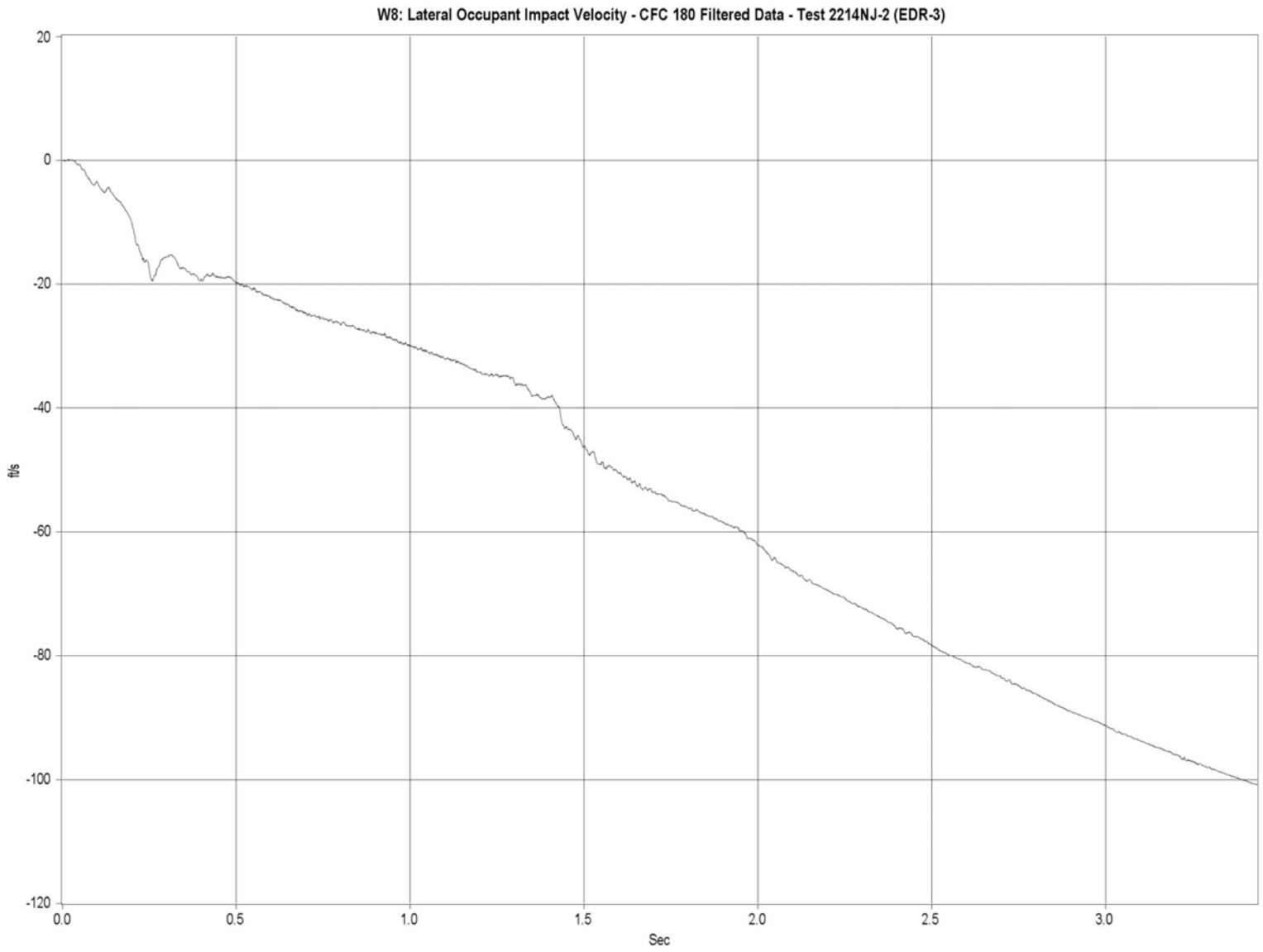

Figure D-5. Graph of Lateral Occupant Impact Velocity, Test 2214NJ-2

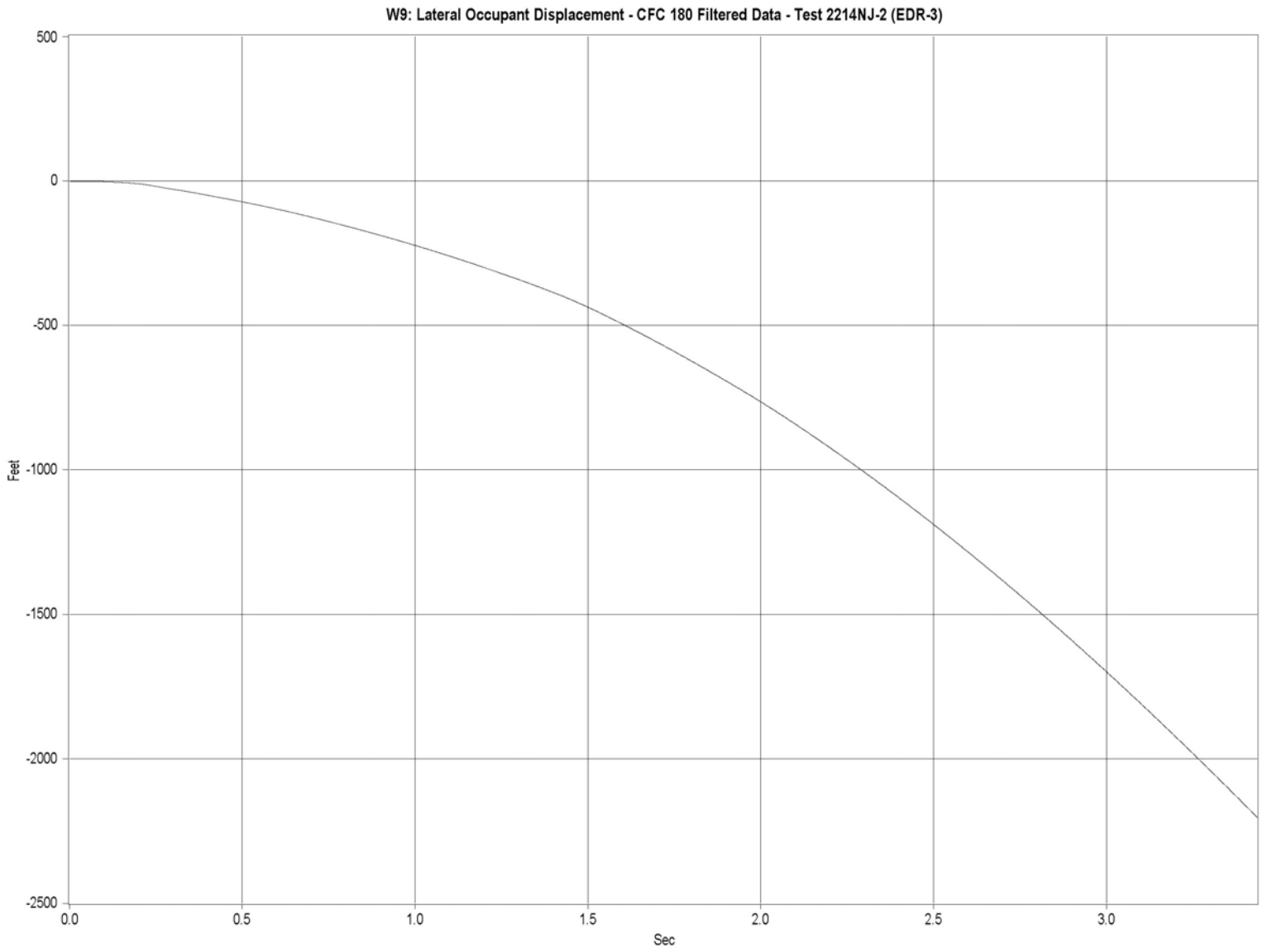

Figure D-6. Graph of Lateral Occupant Displacement, Test 2214NJ-2

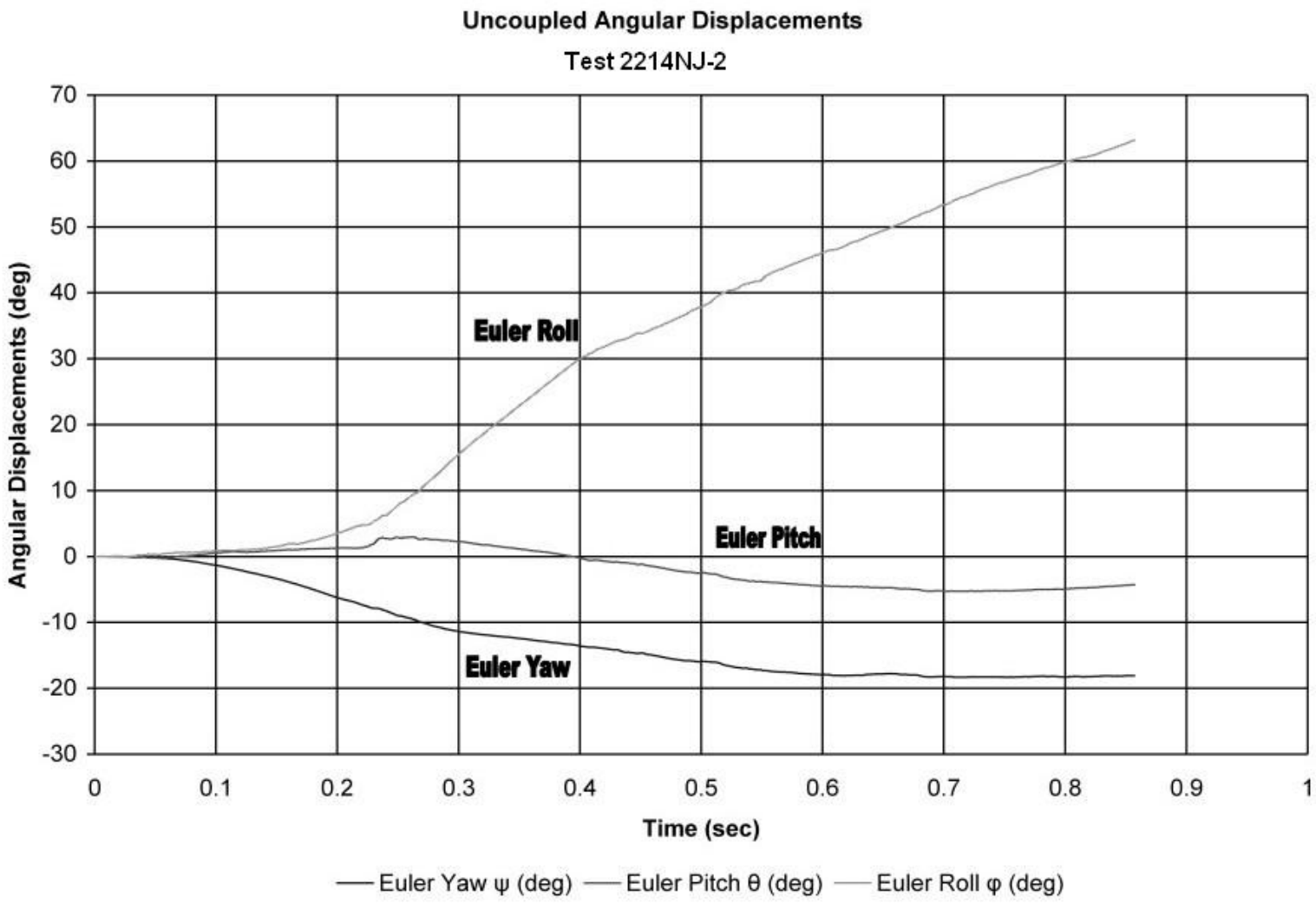

Figure D-7. Graph of Roll, Pitch, and Yaw Angular Displacements, Test 2214NJ-2