Midwest States' Regional Pooled Fund Research Program
Fiscal Years 2003-2005 (Years 14-15)
Research Project Number SPR-3(017)
NDOR Sponsoring Agency Codes RPFP-04-02, RPFP-05-07

PERFORMANCE EVALUATION OF SAFETY GRATES FOR CROSS-DRAINAGE CULVERTS

Submitted by

Karla A. Polivka, M.S.M.E., E.I.T.
Research Associate Engineer

Dean L. Sicking, Ph.D., P.E.
Professor and MwRSF Director

John D. Reid, Ph.D.
Professor

Robert W. Bielenberg, M.S.M.E., E.I.T.
Research Associate Engineer

Ronald K. Faller, Ph.D., P.E.
Research Assistant Professor

John R. Rohde, Ph.D., P.E.
Associate Professor

MIDWEST ROADSIDE SAFETY FACILITY
University of Nebraska-Lincoln
527 Nebraska Hall
Lincoln, Nebraska 68588-0529
(402) 472-0965

Submitted to

Midwest States' Regional Pooled Fund Program
Nebraska Department of Roads
1500 Nebraska Highway 2
Lincoln, Nebraska 68502

MwRSF Research Report No. TRP-03-196-08

October 23, 2008

TECHNICAL REPORT DOCUMENTATION PAGE

1. Report No. TRP-03-196-08	2.	3. Recipient's Accession No.
4. Title and Subtitle Performance Evaluation of Safety Grates for Cross-Drainage Culverts		5. Report Date October 23, 2008 6.
7. Author(s) Polivka, K.A., Sicking, D.L., Reid, J.D., Bielenberg, B.W., Faller, R.K., and Rohde, J.R.		8. Performing Organization Report No. TRP-03-196-08
9. Performing Organization Name and Address Midwest Roadside Safety Facility (MwRSF) University of Nebraska-Lincoln 527 Nebraska Hall Lincoln, NE 68588-0529		10. Project/Task/Work Unit No. 11. Contract © or Grant (G) No. SPR-3(017)
12. Sponsoring Organization Name and Address Midwest States' Regional Pooled Fund Program Nebraska Department of Roads 1500 Nebraska Highway 2 Lincoln, Nebraska 68502		13. Type of Report and Period Covered Final Report 2003-2008 14. Sponsoring Agency Code RPFP-04-02, RPFP-05-07
15. Supplementary Notes Prepared in cooperation with U.S. Department of Transportation, Federal Highway Administration		

16. Abstract (Limit: 200 words)

Cross-drainage culverts create numerous roadside hazards along our nation's highways. Further, these culverts can produce serious accidents when struck by an errant vehicle. Safety treatments for roadside cross-drainage culverts include extending the culvert out of the clear zone, shielding the culvert with guardrail, and making the culvert traversable.

The objective of this study was to investigate the safety performance of traversable culvert safety grates recommended by the AASHTO Roadside Design Guide (RDG) when installed on slopes as steep as 3:1. LS-DYNA modeling was used to identify critical impact conditions for roadside culvert grates installed on 3:1 slopes. Two full-scale vehicle crash tests were conducted under the NCHRP Report No. 350 guidelines on a 6.1-m (20-ft) x 6.1-m (20-ft) culvert safety grate installed on a 3:1 slope. The full-scale crash tests demonstrated that the AASHTO RDG recommended safety grates provide acceptable safety performance when installed on 3:1 slopes.

17. Document Analysis/Descriptors Highway Safety, Roadside Appurtenances, Culvert, Culvert Grate, Slope, Transverse, Crash Test, Compliance Test, Computer Simulation		18. Availability Statement No restrictions. Document available from: National Technical Information Services, Springfield, Virginia 22161	
19. Security Class (this report) Unclassified	20. Security Class (this page) Unclassified	21. No. of Pages 108	22. Price

DISCLAIMER STATEMENT

The contents of this report reflect the views of the authors who are responsible for the facts and the accuracy of the data presented herein. The contents do not necessarily reflect the official views nor policies of the State Highway Departments participating in the Midwest States' Regional Pooled Fund Research Program nor the Federal Highway Administration. This report does not constitute a standard, specification, or regulation.

ACKNOWLEDGMENTS

The authors wish to acknowledge several sources that made a contribution to this project: (1) the Midwest States' Regional Pooled Fund Program funded by the Connecticut Department of Transportation, Illinois Department of Transportation, Iowa Department of Transportation, Kansas Department of Transportation, Minnesota Department of Transportation, Missouri Department of Transportation, Nebraska Department of Roads, New Jersey Department of Transportation, Ohio Department of Transportation, South Dakota Department of Transportation, Wisconsin Department of Transportation, and Wyoming Department of Transportation for sponsoring this project; and (2) MwRSF personnel for constructing the barriers and conducting the crash tests.

Acknowledgment is also given to the following individuals who made a contribution to the completion of this research project.

Midwest Roadside Safety Facility

J.C. Holloway, M.S.C.E., E.I.T., Research Manager
C.L. Meyer, B.S.M.E., E.I.T., Research Engineer II
S.K. Rosenbaugh, M.S.C.E., E.I.T., Research Associate Engineer
A.T. Russell, B.S.B.A., Laboratory Mechanic II
K.L. Krenk, B.S.M.A, Field Operations Manager
A.T. McMaster, Laboratory Mechanic I
Undergraduate and Graduate Assistants

Connecticut Department of Transportation

Dionysia Oliveira, Transportation Engineer 3

Illinois Department of Transportation

David Piper, P.E., Highway Policy Engineer

Iowa Department of Transportation

David Little, P.E., Assistant District Engineer
Deanna Maifield, P.E., Methods Engineer
Chris Poole, P.E., Transportation Engineer Specialist

Kansas Department of Transportation

Ron Seitz, P.E., Bureau Chief
Rod Lacy, P.E., Assistant Bureau Chief
Scott King, P.E., Road Design Leader

Minnesota Department of Transportation

Mohammad Dehdashti, P.E., Design Standard Engineer
Michael Elle, P.E., Technical Support Engineer

Missouri Department of Transportation

Joseph G. Jones, P.E., Technical Support Engineer

Nebraska Department of Roads

Amy Starr, P.E., Research Engineer
Phil TenHulzen, P.E., Design Standards Engineer
Jodi Gibson, Research Coordinator

New Jersey Department of Transportation

Richard Jaffe, Executive Manager, Civil Engineering Department

Ohio Department of Transportation

Dean Focke, P.E., Standards Engineer

South Dakota Department of Transportation

David Huft, Research Engineer
Bernie Clocksin, Standards Engineer

Wisconsin Department of Transportation

John Bridwell, P.E., Standards Development Engineer
Erik Emerson, P.E., Standards Development Engineer

Wyoming Department of Transportation

William Wilson, P.E., Standards Engineer

Federal Highway Administration

John G. Perry, P.E., Nebraska Division Office
Danny Briggs, Nebraska Division Office

Dunlap Photography

James Dunlap, President and Owner

TABLE OF CONTENTS

Page

TECHNICAL REPORT DOCUMENTATION PAGE i

DISCLAIMER STATEMENT ii

ACKNOWLEDGMENTS iii

TABLE OF CONTENTS vi
List of Figures viii
List of Tables x

1 INTRODUCTION 1
1.1 Problem Statement 1
1.2 Objective 5
1.3 Scope 5

2 TEST REQUIREMENTS AND EVALUATION CRITERIA 6
2.3 Test Requirements 6
2.4 Evaluation Criteria 6

3 TEST CONDITIONS 9
3.1 Test Facility 9
3.2 Vehicle Tow and Guidance System 9
3.3 Test Vehicles 9
3.4 Data Acquisition Systems 12
3.4.1 Accelerometers 17
3.4.2 Rate Transducers 17
3.4.3 High-Speed Photography 17
3.4.4 Pressure Tape Switches 18

4 PARAMETRIC STUDY USING LS-DYNA 21
4.1 Critical Impact Conditions 21
4.2 Sizing for Full-Scale Testing 22

5 DESIGN DETAILS 28

6 CRASH TEST KSCG-1 37
6.1 Test KSCG-1 37
6.2 Test Description 37
6.3 System Damage 38
6.4 Vehicle Damage 38
6.5 Occupant Risk Values 39
6.6 Discussion 39

7 CRASH TEST KSCG-2 53
7.1 Test KSCG-2 53
7.2 Test Description 53
7.3 Culvert Grate System Damage 54
7.4 Vehicle Damage 54
7.5 Occupant Risk Values 55
7.6 Discussion 55

8 SUMMARY, CONCLUSIONS, AND RECOMMENDATIONS 67

9 REFERENCES 70

10 APPENDICES 71
APPENDIX A - Impact Tolerances 72
APPENDIX B - English-Unit System Drawings 77
APPENDIX C - Test Summary Sheet in English Units 85
APPENDIX D - Occupant Compartment Deformation Data 88
APPENDIX E - Accelerometer and Rate Transducer Data Analysis, Test KSCG-1 . . . 93
APPENDIX F - Accelerometer and Rate Transducer Data Analysis, Test KSCG-2 . . 101

List of Figures

Page

1. AASHTO RDG Culvert Grating Guidelines 4
2. Test Vehicle, Test KSCG-1 10
3. Vehicle Dimensions, Test KSCG-1 11
4. Test Vehicle, Test KSCG-2 13
5. Vehicle Dimensions, Test KSCG-2 14
6. Vehicle Target Locations, Test KSCG-1 15
7. Vehicle Target Locations, Test KSCG-2 16
8. Locations of High-Speed Cameras, Test KSCG-1 19
9. Locations of High-Speed Cameras, Test KSCG-2 20
10. Simulation Results for 2000P Test Vehicle 24
11. Impact Condition for 2000P Test Vehicle 25
12. Impact Condition for 820C Test Vehicle 26
13. Example of Trajectories Used for Sizing Culvert Grate 27
14. Culvert Layout 29
15. Culvert Details 30
16. Concrete Wall Details 31
17. Bill of Bars 32
18. Culvert Grate Details 33
19. Culvert Grate Part Details 34
20. Concrete Launch Pad 35
21. Culvert Grate System Details, Tests KSCG-1 and KSCG-2 36
22. Summary of Test Results and Sequential Photographs, Test KSCG-1 41
23. Additional Sequential Photographs, Test KSCG-1 42
24. Additional Sequential Photographs, Test KSCG-1 43
25. Documentary Photographs, Test KSCG-1 44
26. Documentary Photographs, Test KSCG-1 45
27. Documentary Photographs, Test KSCG-1 46
28. Vehicle Final Position and Trajectory Marks, Test KSCG-1 47
29. Culvert Grate System Damage, Test KSCG-1 48
30. Culvert Grate System Damage, Test KSCG-1 49
31. Vehicle Damage, Test KSCG-1 50
32. Vehicle Damage, Test KSCG-1 51
33. Occupant Compartment Damage, Test KSCG-1 52
34. Summary of Test Results and Sequential Photographs, Test No. KSCG-2 57
35. Additional Sequential Photographs, KSCG-2 58
36. Documentary Photographs, KSCG-2 59
37. Documentary Photographs, Test KSCG-2 60
38. Vehicle Final Position and Trajectory Marks, Test KSCG-2 61
39. Culvert Grate System Damage, Test KSCG-2 62
40. Vehicle Damage, Test KSCG-2 63
41. Vehicle Damage, Test KSCG-2 64

42. Undercarriage Damage, Test KSCG-2 65
43. Occupant Compartment Damage, Test KSCG-2 66
A-1. Pickup Impact Tolerance - Particle Analysis 73
A-2. Small Car Impact Tolerance - Particle Analysis 74
A-3. Pickup Impact Tolerance - LS-DYNA Analysis 75
A-4. Small Car Impact Tolerance - LS-DYNA Analysis 76
B-1. Culvert Layout (English), Tests KSCG-1 and KSCG-2 78
B-2. Culvert Details (English), Tests KSCG-1 and KSCG-2 79
B-3. Concrete Wall Details (English), Tests KSCG-1 and KSCG-2 80
B-4. Bill of Bars (English), Tests KSCG-1 and KSCG-2 81
B-5. Culvert Grate Details (English), Tests KSCG-1 and KSCG-2 82
B-6. Culvert Grate Part Details (English), Tests KSCG-1 and KSCG-2 83
B-7. Concrete Launch Pad (English), Tests KSCG-1 and KSCG-2 84
C-1. Summary of Test Results and Sequential Photographs (English), Test KSCG-1 86
C-2. Summary of Test Results and Sequential Photographs (English), Test KSCG-2 87
D-1. Occupant Compartment Deformation Data - Set 1, Test KSCG-1 89
D-2. Occupant Compartment Deformation Data - Set 2, Test KSCG-1 90
D-3. Occupant Compartment Deformation Index (OCDI), Test KSCG-1 91
D-4. Occupant Compartment Deformation Index (OCDI), Test KSCG-2 92
E-1. Graph of Longitudinal Deceleration, Test KSCG-1 94
E-2. Graph of Longitudinal Occupant Impact Velocity, Test KSCG-1 95
E-3. Graph of Longitudinal Occupant Displacement, Test KSCG-1 96
E-4. Graph of Lateral Deceleration, Test KSCG-1 97
E-5. Graph of Lateral Occupant Impact Velocity, Test KSCG-1 98
E-6. Graph of Lateral Occupant Displacement, Test KSCG-1 99
E-7. Graph of Roll, Pitch, and Yaw Angular Displacements, Test KSCG-1 100
F-1. Graph of Longitudinal Deceleration, Test KSCG-2 102
F-2. Graph of Longitudinal Occupant Impact Velocity, Test KSCG-2 103
F-3. Graph of Longitudinal Occupant Displacement, Test KSCG-2 104
F-4. Graph of Lateral Deceleration, Test KSCG-2 105
F-5. Graph of Lateral Occupant Impact Velocity, Test KSCG-2 106
F-6. Graph of Lateral Occupant Displacement, Test KSCG-2 107
F-7. Graph of Roll, Pitch, and Yaw Angular Displacements, Test KSCG-2 108

List of Tables

Page

1. Summary of Prior Full-Scale Crash Tests Conducted on Culvert Grates 3
2. NCHRP Report No. 350 Test Level 3 Crash Test Conditions 7
3. NCHRP Report No. 350 Evaluation Criteria for Crash Tests 8
4. Summary of Safety Performance Evaluation Results 69

1 INTRODUCTION

1.1 Problem Statement

Cross-drainage culverts create numerous roadside hazards along our nation's highways. Further, these culverts can produce serious accidents when struck by an errant vehicle. Safety treatments for roadside cross-drainage culverts include extending the culvert out of the clear zone, shielding the culvert with guardrail, and making the culvert traversable.

Extending a culvert out of the clear zone often requires large amounts of fill material to re-configure the roadside slopes adjacent to the roadway. Not only is the extension of the culvert and placement of fill costly, but the reconfigured slopes often produce complicated geometries which can cause errant vehicles to roll over. Using guardrail to shield traffic from culverts also has some disadvantages. Guardrails cannot normally be placed near a culvert because of the steepness of most roadside slopes. As a result, long guardrail installations are usually needed to protect motorists from cross-drainage culverts. This type of installation produces numerous guardrail crashes for every culvert impact that is prevented. Although making a culvert traversable can adversely affect hydraulic efficiency, the cost of this type of treatment is normally modest, and it does not increase the number of crashes by enlarging the hazard.

Not surprisingly, studies of the benefits and costs of safety treatments for cross-drainage structures have indicated that the culvert grates often provide both the least costly and the safest treatment for cross-drainage culverts (1-3). However, all of these studies are based upon the basic assumption that grates can make culverts safely traversable when installed on any traversable slope.

The most comprehensive study of the safety grates for cross-drainage culverts was published in by Ross, et al. in 1982 (4). Unfortunately, this research was conducted under safety performance

evaluation guidelines contained in Transportation Research Circular 191 (5), and it was limited to roadside slopes of 5:1. Although computer simulation modeling indicated that the safety grates could be effective on steeper slopes, no crash testing was conducted to verify performance.

Another study was undertaken to examine the effectiveness of culvert grates when installed on slopes as steep as 4:1 (6). Unfortunately, this study incorporated the use of 25-mm (1-in.) diameter rebar spaced 305 mm (12 in.) apart. Although this culvert grate was found to provide adequate safety performance, the close spacing of the grating makes it much more likely to snag debris and clog the culvert pipe. As a result of the potential for producing localized flooding and allowing water to flow over the road surface, this culvert grating system has not gained wide spread acceptance. A summary of previous full-scale crash testing on sloped transverse culvert safety grates is shown in Table 1.

Culvert grating guidelines developed by Ross et al. (4) were subsequently included in American Association of State Highway Transportation Officials (AASHTO) Roadside Design Guide (RDG) (7), as shown in Figure 1. Based strictly on the 1981 computer modeling of traversable slopes, these designs were recommended for use on slopes as steep as 3:1. Hence, the cross-drainage culvert grating guidelines contained in the RDG have never been subjected to full-scale crash testing under the current Test Level 3 (TL-3) safety performance evaluation guidelines (8), and no testing has ever been conducted on slopes steeper than 4:1. In recognition of the need to examine the safety performance of cross-drainage culvert grates under current criteria when installed on roadside slopes as steep as 3:1, the Midwest States Pooled Fund Program initiated the study described herein.

Table 1. Summary of Prior Full-Scale Crash Tests Conducted on Culvert Grates

Research Organization	Reference No.	Test No.	Pass/ Fail	Roadside Slope	Culvert Description	Grate Description	Impact Conditions				
							Weight		Speed		Angle
							(kg)	(lbs)	(km/h)	(mph)	(deg)
TTI	2,4	2	Pass	5:1	762 mm (30 in.) diameter corrugated metal pipe culvert	not applicable	2041	4500	32.2	20	5
		3	Pass	5:1	762 mm (30 in.) diameter corrugated metal pipe culvert	not applicable	816	1800	32.2	20	5
		4	Pass	5:1	trapezoidal concrete box culvert	76 mm (3 in.) diameter standard pipe grating spaced on 762 mm (30 in.) centers	816	1800	32.2	20	5
		5	Pass	5:1	trapezoidal concrete box culvert	76 mm (3 in.) diameter standard pipe grating spaced on 762 mm (30 in.) centers	2041	4500	32.2	20	5
		6	Fail	5:1	trapezoidal concrete box culvert	76 mm (3 in.) diameter standard pipe grating spaced on 762 mm (30 in.) centers	816	1800	96.6	60	5
		7	Pass	5:1	trapezoidal concrete box culvert	76 mm (3 in.) diameter standard pipe grating spaced on 762 mm (30 in.) centers	2041	4500	96.6	60	5
NYS DOT	6	123	Pass	4:1	914 mm (36 in.) diameter culvert with standard metal end section	914 mm (36 in.) diameter culvert with standard metal end section	816	1800	91.7	57	15
		124	Pass	4:1	914 mm (36 in.) diameter culvert with standard metal end section	914 mm (36 in.) diameter culvert with standard metal end section	2041	4500	96.6	60	23

SPAN LENGTH (m)	INSIDE DIAMATER (mm)
up to 3.65	75 mm
3.65 - 4.90	87 mm
4.90 - 6.10	100 mm
6.10 or less with center support	75 mm

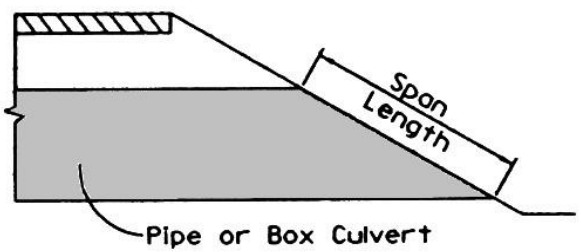

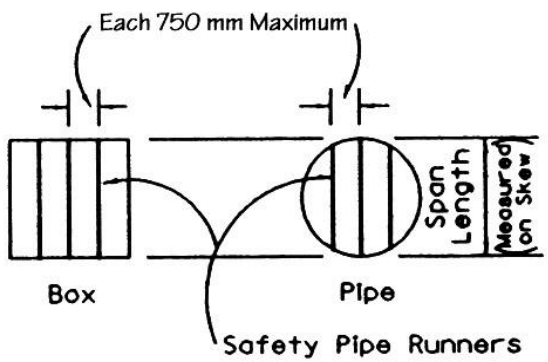

Figure 1. AASHTO RDG Culvert Grating Guidelines

4

1.2 Objective

The objectives of this research study were to: (1) identify critical impact conditions for culvert grates installed on steep slopes; and (2) evaluate the safety performance of these culvert safety grates under the National Cooperative Highway Research Program (NCHRP) Report No. 350 guidelines, *Recommended Procedures for the Safety Performance Evaluation of Highway Features* (8).

1.3 Scope

In order to complete the research objectives, several tasks were undertaken. First, a literature review was conducted to determine prior testing on culvert grate design and current designs being utilized. Second, LS-DYNA modeling was utilized to examine the risks of vehicle rollover when encountering a large culvert grate placed upon a 3:1 roadside slope. Next, two full-scale vehicle crash tests were performed on a 6.4-m (21-ft) x 6.4-m (21-ft) box culvert grate installed on a 3:1 slope. The first test utilized a ¾-ton pickup truck, weighting approximately 2,000 kg (4,409 lbs), with a target impact speed and angle of 100.0 km/h (62.1 mph) and 25 degrees, respectively. The second test utilized a small compact car, weighing approximately 820 kg (1,808 lbs), with a target impact speed and angle of 100.0 km/h (62.1 mph) and 20 degrees, respectively. The test results were then analyzed, evaluated, and documented. Conclusions and recommendations were made that pertain to the safety performance of the culvert grate system.

2 TEST REQUIREMENTS AND EVALUATION CRITERIA

2.3 Test Requirements

NCHRP Report No. 350 recommends that roadside geometric features be tested under impact conditions similar to that associated with longitudinal barriers. Furthermore, NCHRP Report No. 350 also recommends that computer simulation modeling should be used to choose the critical impact conditions and reduced impact angles should be used when deemed to be more critical. According to Test Level 3 (TL-3) of NCHRP Report No. 350, the longitudinal barrier systems must be subjected to two full-scale vehicle crash tests. The two full-scale crash tests are as follows:

1. Test Designation 3-10 consisting of an 820-kg (1,808-lb) small car impacting the system at a nominal speed and angle of 100.0 km/h (62.1 mph) and 20 degrees, respectively.

2. Test Designation 3-11 consisting of a 2,000-kg (4,409-lb) pickup truck impacting the system at a nominal speed and angle of 100.0 km/h (62.1 mph) and 25 degrees, respectively.

The test conditions for TL-3 longitudinal barriers are summarized in Table 2.

2.4 Evaluation Criteria

According to NCHRP Report No. 350, the evaluation criteria for full-scale vehicle crash testing are based on three appraisal areas: (1) structural adequacy; (2) occupant risk; and (3) vehicle trajectory after collision. Criteria for structural adequacy are intended to evaluate the ability of the barrier to contain, redirect, or allow controlled vehicle penetration in a predictable manner. Occupant risk evaluates the degree of hazard to occupants in the impacting vehicle. Vehicle trajectory after collision is a measure of the potential for the post-impact trajectory of the vehicle to cause subsequent multi-vehicle accidents. This criterion also indicates the potential safety hazard for the occupants of other vehicles or the occupants of the impacting vehicle when subjected to secondary

collisions with other fixed objects. These three evaluation criteria are summarized in Table 3 and defined in NCHRP Report No.350. The full-scale vehicle crash tests were conducted and reported in accordance with the procedures provided in NCHRP Report No. 350.

Table 2. NCHRP Report No. 350 Test Level 3 Crash Test Conditions

Test Article	Test Designation	Test Vehicle	Impact Conditions			Evaluation Criteria[1]
			Speed		Angle (degrees)	
			(km/h)	(mph)		
Longitudinal Barrier	3-10	820C	100	62.1	20	A,D,F,H,I,K,M
	3-11	2000P	100	62.1	25	A,D,F,K,L,M

[1] Evaluation criteria explained in Table 3.

Table 3. NCHRP Report No. 350 Evaluation Criteria for Crash Tests

Evaluation Factors	Evaluation Criteria	
Structural Adequacy	A.	Test article should contain and redirect the vehicle; the vehicle should not penetrate, underride, or override the installation although controlled lateral deflection of the test article is acceptable.
Occupant Risk	D.	Detached elements, fragments or other debris from the test article should not penetrate or show potential for penetrating the occupant compartment, or present an undue hazard to other traffic, pedestrians, or personnel in a work zone. Deformations of, or intrusions into, the occupant compartment that could cause serious injuries should not be permitted.
	F.	The vehicle should remain upright during and after collision although moderate roll, pitching, and yawing are acceptable.
	H.	Longitudinal and lateral occupant impact velocities should fall below the preferred value of 9 m/s (29.5 ft/s), or at least below the maximum allowable value of 12 m/s (39.4 ft/s).
	I.	Longitudinal and lateral occupant ridedown accelerations should fall below the preferred value of 15 g's, or at least below the maximum allowable value of 20 g's.
Vehicle Trajectory	K.	After collision it is preferable that the vehicle's trajectory not intrude into adjacent traffic lanes.
	L.	The occupant impact velocity in the longitudinal direction should not exceed 12 m/s (39.4 ft/s) and the occupant ridedown acceleration in the longitudinal direction should not exceed 20 g's.
	M.	The exit angle from the test article preferably should be less than 60 percent of test impact angle, measured at time of vehicle loss of contact with test device.

3 TEST CONDITIONS

3.1 Test Facility

The testing facility is located at the Lincoln Air Park on the northwest side of the Lincoln Municipal Airport and is approximately 8.0 km (5 mi.) northwest of the University of Nebraska-Lincoln.

3.2 Vehicle Tow and Guidance System

A reverse cable tow system with a 1:2 mechanical advantage was used to propel the test vehicle. The distance traveled and the speed of the tow vehicle were one-half that of the test vehicle. The test vehicle was released from the tow cable before impact with the barrier system. A digital speedometer was located on the tow vehicle to increase the accuracy of the test vehicle impact speed.

A vehicle guidance system developed by Hinch (9) was used to steer the test vehicle. A guide flag, attached to the front-right wheel and the guide cable, was sheared off before impact with the barrier system. The 9.5-mm (0.375-in.) diameter guide cable was tensioned to approximately 15.6 kN (3500 lbf), and supported laterally and vertically every 30.48 m (100 ft) by hinged stanchions. The hinged stanchions stood upright while holding up the guide cable, but as the vehicle was towed down the line, the guide-flag struck and knocked each stanchion to the ground. For tests KSCG-1 and KSCG-2, the vehicle guidance systems were approximately 335 m (1,100 ft) and 242 m (794 ft) long, respectively.

3.3 Test Vehicles

For test KSCG-1, a 2000 Chevrolet C2500 ¾-ton pickup truck was used as the test vehicle. The test inertial and gross static weights were both 2,034 kg (4,484 lbs). The test vehicle is shown in Figure 2, and vehicle dimensions are shown in Figure 3.

Figure 2. Test Vehicle, Test KSCG-1

Date: 7/20/06 Test Number: KSCG-1 Model: 2000P/ C2500

Make: Chevy Vehicle I.D.#: 1GCGC24R7YR141133

Tire Size: LT245/75 R16 Year: 2000 Odometer: 219048

*(All Measurements Refer to Impacting Side)

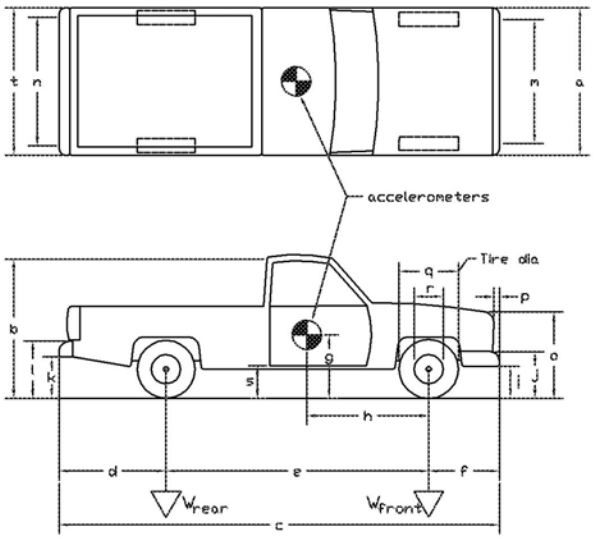

Vehicle Geometry – mm (in.)

a	1899 (74.75)	b	1835 (72.25)
c	5550 (218.5)	d	1308 (51.5)
e	3340 (131.5)	f	902 (35.5)
g	665 (26.2)	h	1394 (54.9)
i	445 (17.5)	j	660 (26.0)
k	610 (24.0)	l	787 (31.0)
m	1597 (62.875)	n	1629 (64.125)
o	1016 (40.0)	p	102 (4.0)
q	762 (30.0)	r	445 (17.5)
s	476 (18.75)	t	1867 (73.5)

Wheel Center Height Front 368 (14.5)

Wheel Center Height Rear 371 (14.625)

Wheel Well Clearance (FR) 905 (35.625)

Wheel Well Clearance (RR) 959 (37.75)

Frame Height (FR) 406 (16.0)

Frame Height (RR) 686 (27.0)

Engine Type 8 CYL. GAS

Engine Size 5.7 L 350 CID

Transmission Type:

(Automatic) or Manual

FWD or (RWD) or 4WD

Weights kg (lbs)	Curb	Test Inertial	Gross Static
W_{front}	1248 (2751)	1184 (2610)	1184 (2610)
W_{rear}	943 (2080)	850 (1875)	850 (1875)
W_{total}	2196 (4841)	2034 (4484)	2034 (4484)

GVWR Rating

front 4100

rear 6600

total 8600

Note any damage prior to test: None

Figure 3. Vehicle Dimensions, Test KSCG-1

For test KSCG-2, a 1999 Chevrolet Metro was used as the test vehicle. The test inertial and gross static weights were 831 kg (1,833 lbs) and 906 kg (1,997 lbs), respectively. The test vehicle is shown in Figure 4, and vehicle dimensions are shown in Figure 5.

The longitudinal component of the center of gravity (c.g.) was determined using the measured axle weights. The locations of the final centers of gravity are shown in Figures 2 through 5.

Square black and white-checkered targets were placed on the vehicle to aid in the analysis of the high-speed E/cam and AOS videos, as shown in Figures 6 and 7. Round, checkered targets were placed on the center of gravity, on the left-side door, on the right-side door, and on the roof of the vehicle. The remaining targets were located for references so that they could be viewed from the high-speed cameras for video analysis.

The front wheels of the test vehicle were aligned for camber, caster, and toe-in values of zero so that the vehicle would track properly along the guide cable. A 5B flash bulb was mounted on the dashboard of the vehicle to pinpoint the time of impact with the barrier on the high-speed E/cam and AOS videos. The flash bulb was fired by a pressure tape switch mounted on the front face of the bumper. A remote-controlled brake system was installed in the test vehicle so the vehicle could be brought safely to a stop after a test.

3.4 Data Acquisition Systems

Three data acquisition systems, two accelerometers and one rate transducer, were used to measure the motion of the vehicle. The results of all three were analyzed and plotted using “DynaMax 1 (DM-1)” and “DADiSP” computer software programs.

Figure 4. Test Vehicle, Test KSCG-2

Date: 8/23/06 Test Number: KSCG-2 Model: 820C – Metro

Make: Chevrolet Vehicle I.D.#: 2C1MR2221W6703251

Tire Size: P155/80R13 Year: 1999 Odometer: 78518

*(All Measurements Refer to Impacting Side)

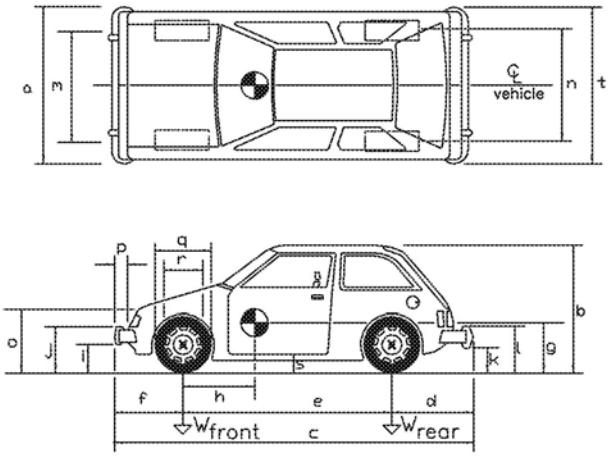

Vehicle Geometry – mm (in.)

a	1568 (61.75)	b	1416 (55.75)
c	3797 (149.5)	d	603 (23.75)
e	2369 (93.25)	f	826 (32.5)
g	546 (21.5)	h	841 (33.125)
i	413 (16.25)	j	521 (20.5)
k	305 (12.0)	l	648 (25.5)
m	1384 (54.5)	n	1353 (53.25)
o	572 (22.5)	p	89 (3.5)
q	578 (22.75)	r	362 (14.25)
s	318 (12.5)	t	1568 (61.75)

Wheel Center Height 273 (10.75)

Engine Type 4 CYL. GAS

Engine Size 1.3 L

Transmission Type:

Automatic or Manual

FWD or RWD or 4WD

GVWR F 650 (1433)
GVWR R 560 (1235)
GVWR Tot. 1190 (2623)

Weights kg (lbs)	Curb	Test Inertial	Gross Static
W_{front}	550 (1212)	537 (1183)	574 (1265)
W_{rear}	287 (632)	295 (650)	332 (732)
W_{total}	836 (1844)	831 (1833)	906 (1997)

Note any damage prior to test: NONE

Figure 5. Vehicle Dimensions, Test KSCG-2

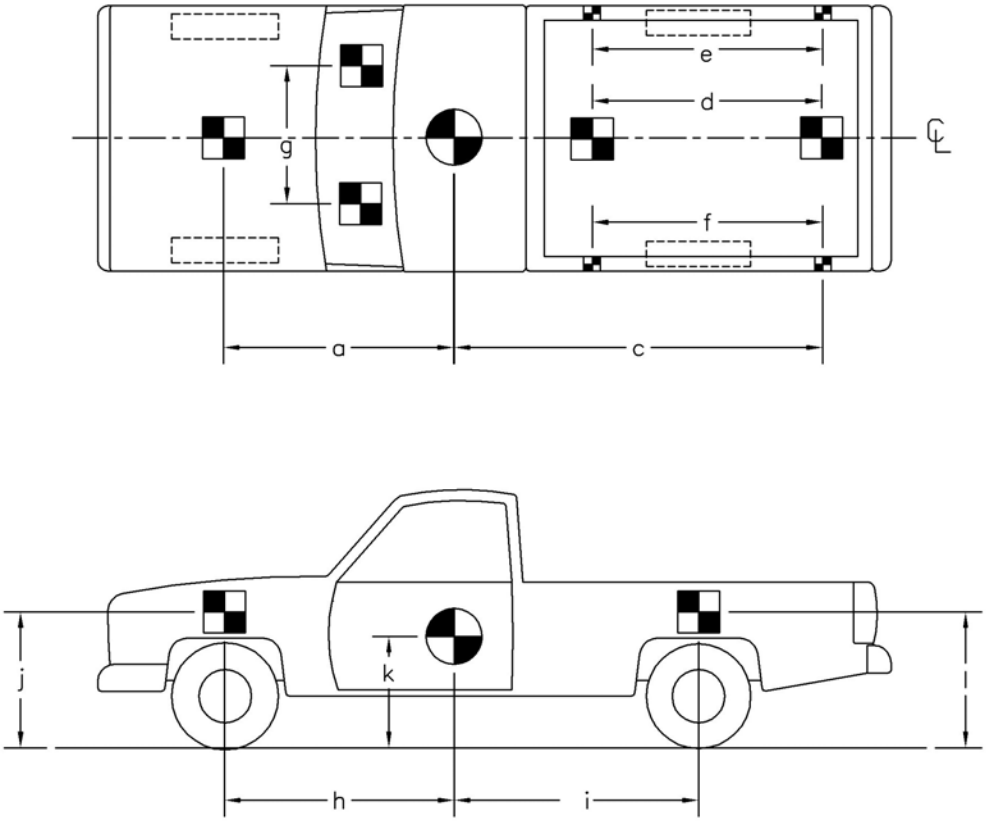

TEST #: KSCG-1

TARGET GEOMETRY -- mm (in.)

a	1641 (64.625)	d	1581 (62.25)	g	870 (34.25)	j	1022 (40.25)
b	–	e	2153 (84.75)	h	1394 (54.9)	k	665 (26.2)
c	286 (11.25)	f	2153 (84.75)	i	1946 (76.6)	l	1073 (42.25)

Figure 6. Vehicle Target Locations, Test KSCG-1

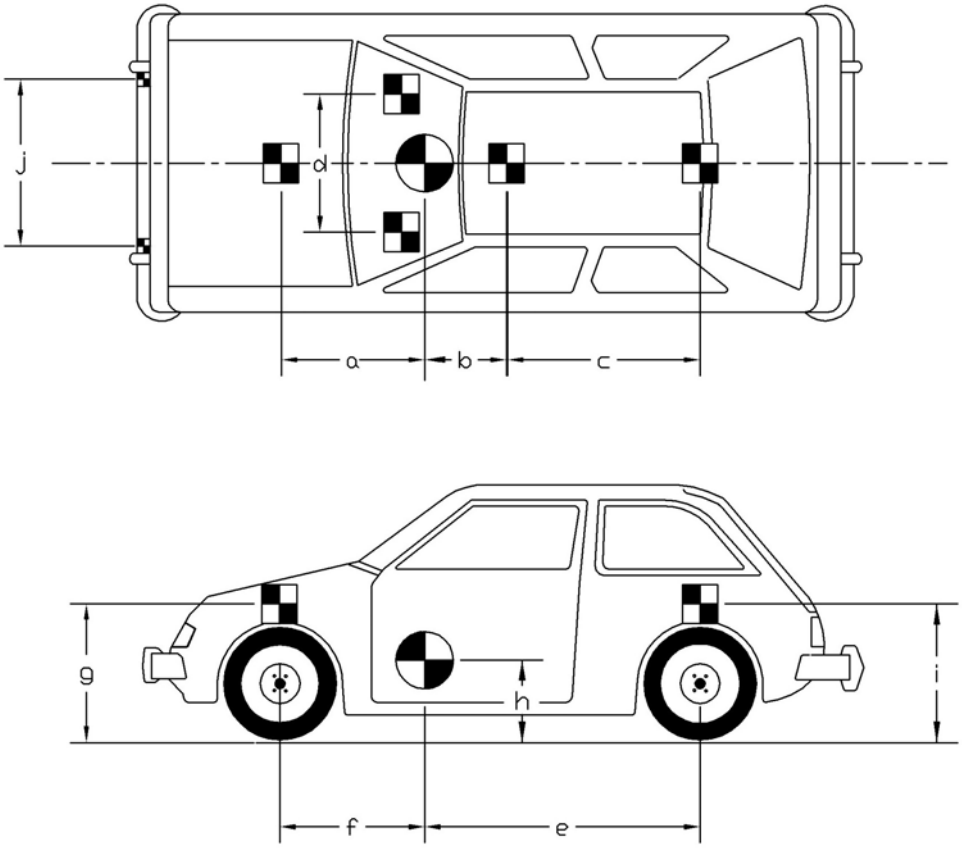

TEST #: KSCG-2

TARGET GEOMETRY -- mm (in.)

a	1092 (43.0)	b	222 (8.75)	c	1086 (42.75)	d	546 (21.5)
e	1527 (60.125)	f	841 (33.125)	g	737 (29.0)		
i	765 (30.125)	j	784 (30.875)	k	581 (22.875)		

Figure 7. Vehicle Target Locations, Test KSCG-2

3.4.1 Accelerometers

One triaxial piezoresistive accelerometer system with a range of ± 200 g's was used to measure the acceleration in the longitudinal, lateral, and vertical directions at a sample rate of 10,000 Hz. The environmental shock and vibration sensor/recorder system, Model EDR-4M6, was developed by Instrumented Sensor Technology (IST) of Okemos, Michigan and includes three differential channels as well as three single-ended channels. The EDR-4 was configured with 6 MB of RAM memory and a 1,500 Hz lowpass filter.

Another triaxial piezoresistive accelerometer system with a range of ± 200 g's was also used to measure the acceleration in the longitudinal, lateral, and vertical directions at a sample rate of 3,200 Hz. The environmental shock and vibration sensor/recorder system, Model EDR-3, was developed by Instrumented Sensor Technology (IST) of Okemos, Michigan. The EDR-3 was configured with 256 kB of RAM memory and a 1,120 Hz lowpass filter.

3.4.2 Rate Transducers

An Analog Systems 3-axis rate transducer with a range of 1,200 degrees/sec in each of the three directions (pitch, roll, and yaw) was used to measure the rates of motion of the test vehicle. The rate transducer was mounted inside the body of the EDR-4M6 and recorded data at 10,000 Hz to a second data acquisition board inside the EDR-4M6 housing. The raw data measurements were then downloaded, converted to the appropriate Euler angles for analysis, and plotted.

3.4.3 High-Speed Photography

For test KSCG-1, four high-speed AOS VITcam video cameras and one high-speed Red Lake E/cam video camera, all with operating speeds of 500 frames/sec, were used to film the crash test. Four Canon digital video cameras and two JVC digital video cameras, all with standard

operating speeds of 29.97 frame/sec, were also used to film the crash test. Camera details and a schematic of all ten camera locations for test KSCG-1 are shown in Figure 8.

For test KSCG-2, four high-speed AOS VITcam video cameras, with operating speeds of 500 frame/sec, were used to film the crash test. Five Canon digital video cameras and two JVC digital video cameras, all with standard operating speeds of 29.97 frame/sec, were also used to film test KSCG-2. Camera details and a schematic of all eleven camera locations for test KSCG-2 are shown in Figure 9.

The AOS videos and E/cam video were analyzed using the ImageExpress MotionPlus software and Redlake Motion Scope software, respectively. Actual camera speed and camera divergence factors were considered in the analysis of the high-speed videos.

3.4.4 Pressure Tape Switches

For tests KSCG-1 and KSCG-2, five pressure-activated tape switches, spaced at 2-m (6.56-ft) intervals, were used to determine the speed of the vehicle before impact. Each tape switch fired a strobe light which sent an electronic timing signal to the data acquisition system as the vehicle's front tire passed over it. For test KSCG-1 and KSCG-2, the left-front and right-front tire of the vehicle passed over the tape switches, respectively. Test vehicle speed was determined from electronic timing mark data recorded using TestPoint software. Strobe lights and high-speed video analysis are used only as a backup in the event that vehicle speed cannot be determined from the electronic data.

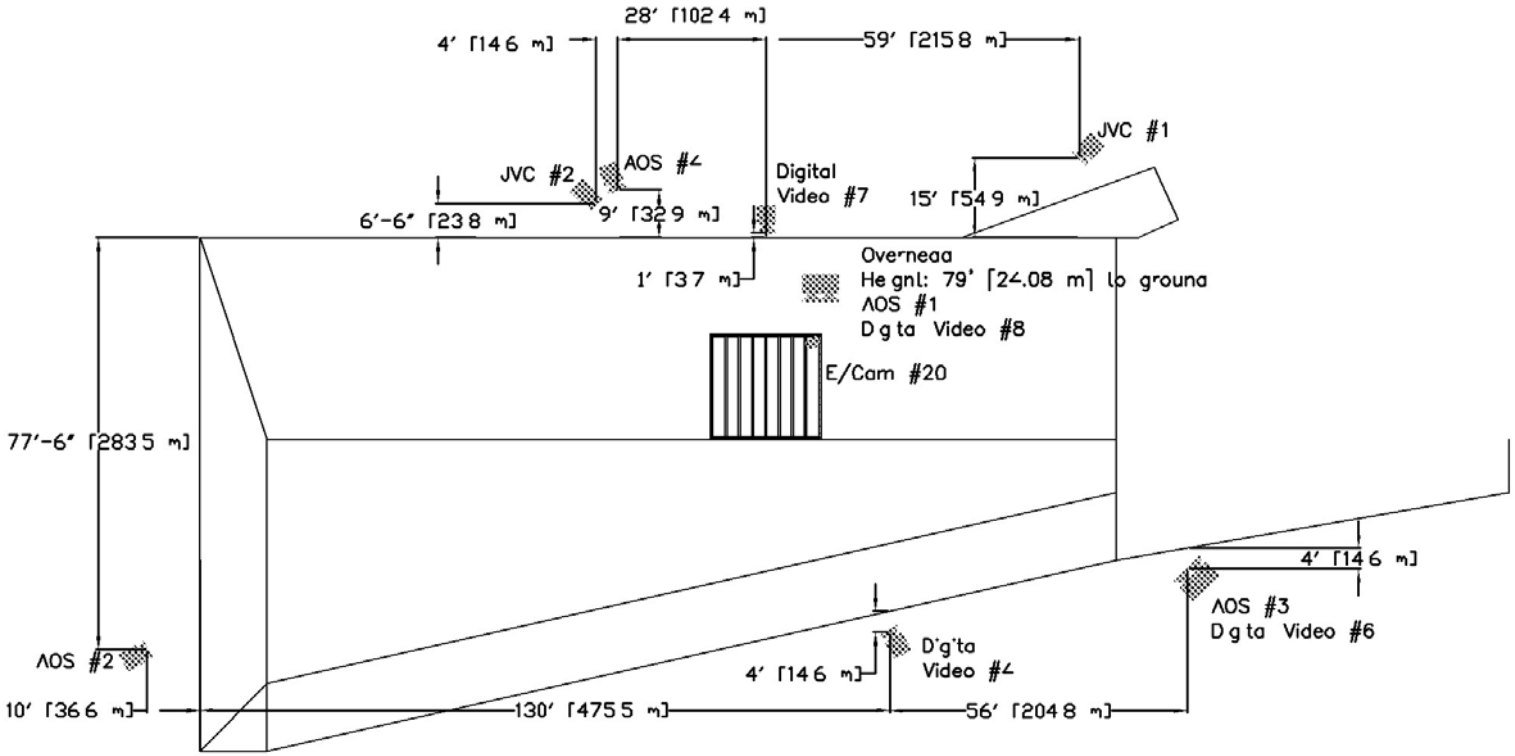

Figure 8. Locations of High-Speed Cameras, Test KSCG-1

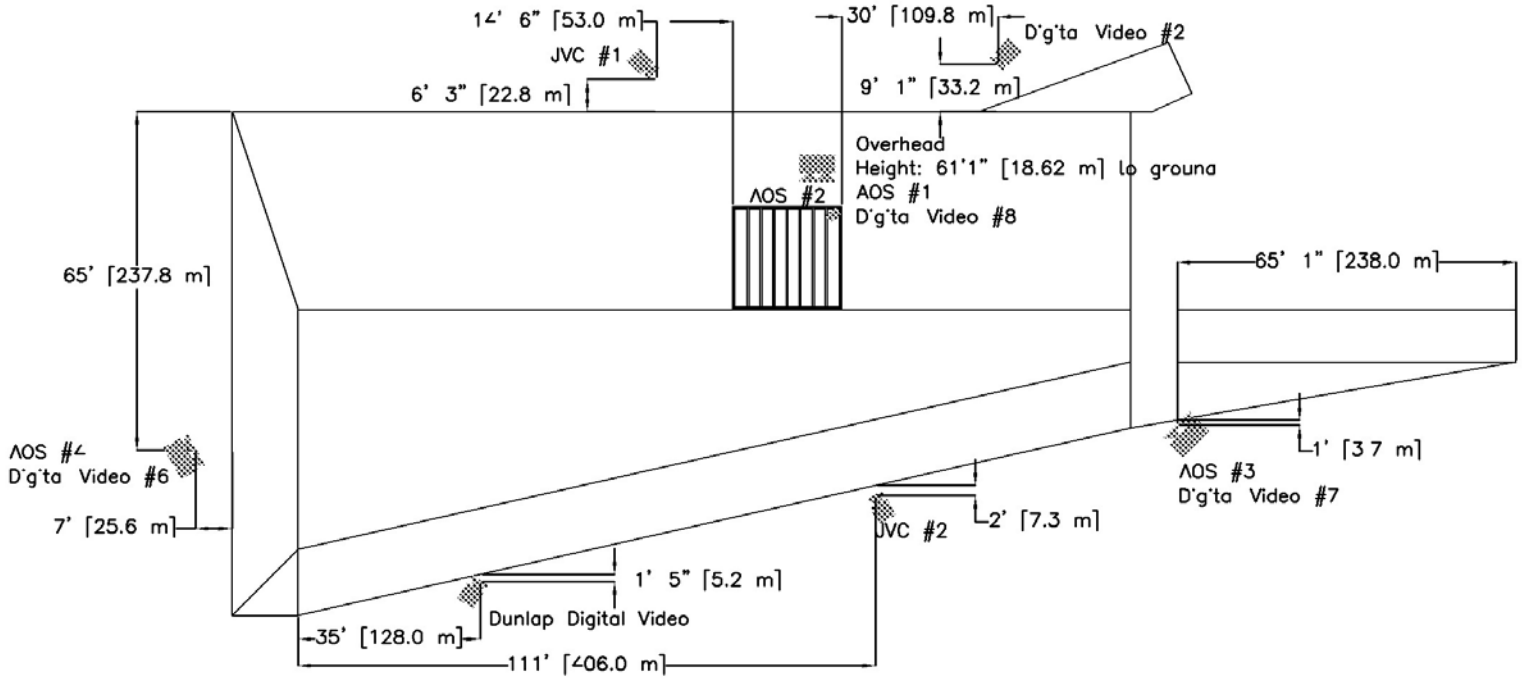

Figure 9. Locations of High-Speed Cameras, Test KSCG-2

4 PARAMETRIC STUDY USING LS-DYNA

LS-DYNA simulation was used to identify critical impact conditions for roadside culvert grates installed on 3:1 slopes. Additionally, LS-DYNA was relied upon to help identify the appropriate culvert size for use in the full-scale crash testing.

4.1 Critical Impact Conditions

LS-DYNA was utilized to examine the risks of vehicle rollover when encountering a large culvert grate placed upon a 3:1 roadside slope. The analysis involved simulating 820C and 2000P vehicles departing the roadway at a speed of 100 km/h (62.1 mph) and at a variety of angles. The analysis was conducted with rigid culvert grate members to simulate maximum tire loading on the impacting vehicle.

When a vehicle encroaches onto a 3:1 roadside slope at a high rate of speed, it lifts off of the ground for some time as it falls into the ditch. High exit angles increase the maximum height that the vehicle attains above the slope and the distance that the encroaching vehicle travels before impacting the slope. LS-DYNA indicated that the risk of vehicle suspension damage and snagging on the grate bars is increased with increasing encroachment angle and when the impacting vehicle re-contacts the ground directly on the culvert grate. Note that, because the truck test involves a higher allowable impact angle and a higher vehicle mass, this test produces the maximum loading on the culvert grate and the greatest risk of grate bar yielding, vehicle suspension failure, and snagging on the grate system. Simulation results from this impact condition are shown in Figure 10, while the target landing conditions for the 2000P pickup truck test are shown in Figure 11.

LS-DYNA modeling of the 820C vehicle indicated less risk of grate damage, reduced suspension loading, and reduced risk of vehicle snagging. Thus, for the simulation effort, the impact

location was moved to allow only one side of the vehicle to land on the grate while the other side landed on the slope. This modeling indicated a potential for the test vehicle to begin to spin out as it traversed across the grating. If the yaw progressed to the point that the vehicle was no longer tracking, the sides of the vehicle tires would begin to contact grate bars and vehicle tripping becomes likely. The impact conditions for the 820C test were therefore chosen to investigate this potential mode of failure. The target landing conditions for the 820C test is shown in Figure 12.

4.2 Sizing for Full-Scale Testing

Minor variations in impact conditions create significant variation in the landing position of the test vehicles. Thus, trajectory runs were made in order to determine bounds for vehicle landing. These bounds were then used to size the culvert grate. A schematic of the trajectory landings for the simulations are shown in Figure 13. For the truck, a total of nine runs were made varying the speed and departure angle: 3 speeds (96, 100, 104 km/h or 59.7, 62.1, 64.6 mph) and 3 angles (23.5, 25, 26.5 deg). Similarly, for the Geo Metro a total of nine runs were made at 3 speeds (96, 100, 104 km/h or 59.7, 62.1, 64.6 mph) and 3 angles at each speed (18.5, 20, 21.5 deg).

LS-DYNA results indicated that a 6.4-m x 6.4-m (21-ft x 21-ft) culvert grate would be sufficient to assure that the test vehicles would strike the culvert in the intended manner. The culvert grate is intended to simulate a safety treatment of a 2.1 m high by 6.4 m (7 ft by 21 ft) wide culvert installed on a 3:1 slope. The 6.4 m x 6.4 m (21 ft x 21 ft) simulated culvert grate system incorporated 102-mm (4-in.) diameter schedule 40 steel pipes mounted on top of a mock culvert. Note that the 6.4 m (20 ft) span is the maximum allowable length for 102-mm (4-in.) diameter pipe. Also, the culvert size represents the upper bound of culvert designs installed by state departments of

transportation. The culvert was constructed 5.8 m (19 ft) downhill from the top of a 3:1 embankment.

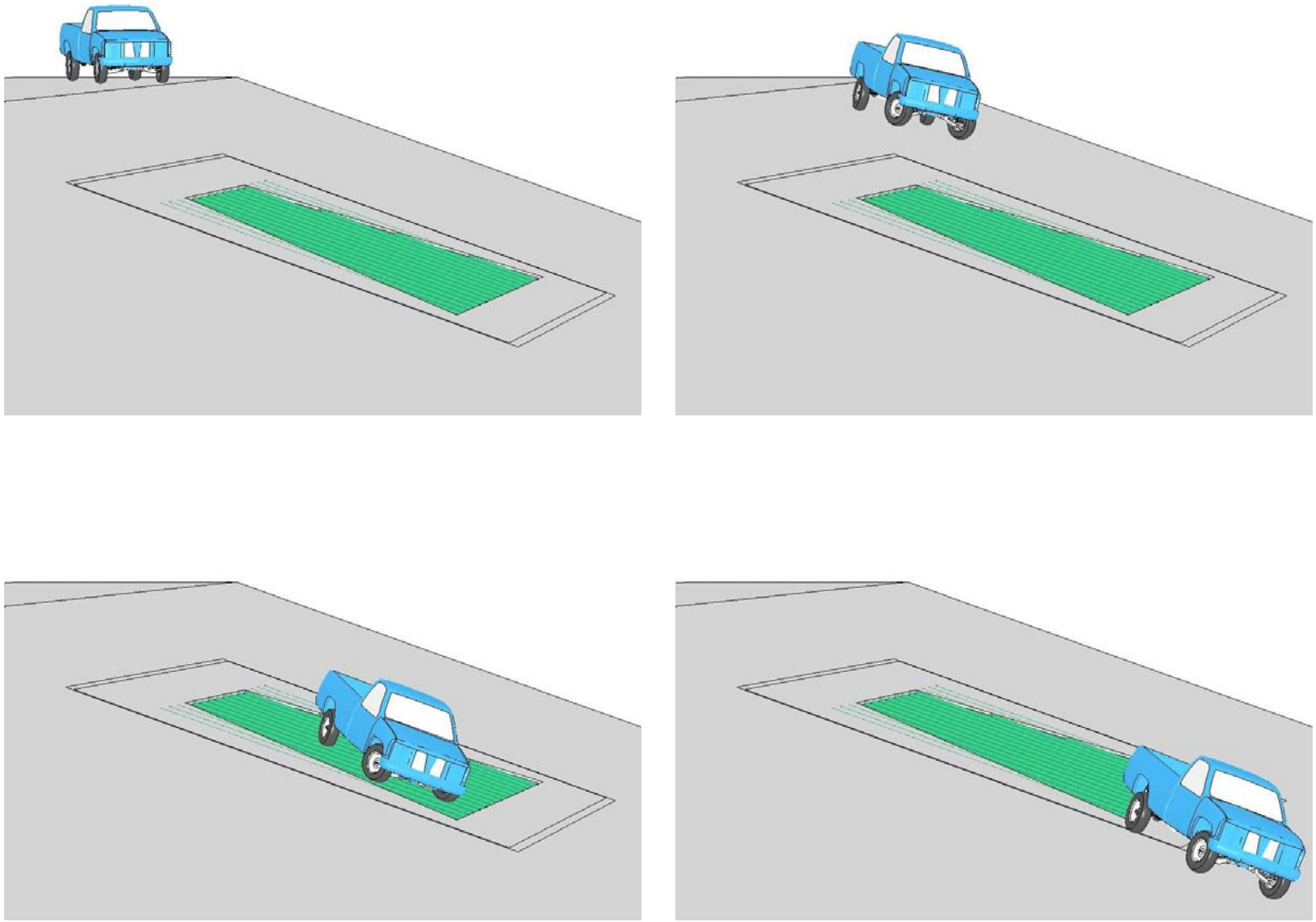

Figure 10. Simulation Results for 2000P Test Vehicle

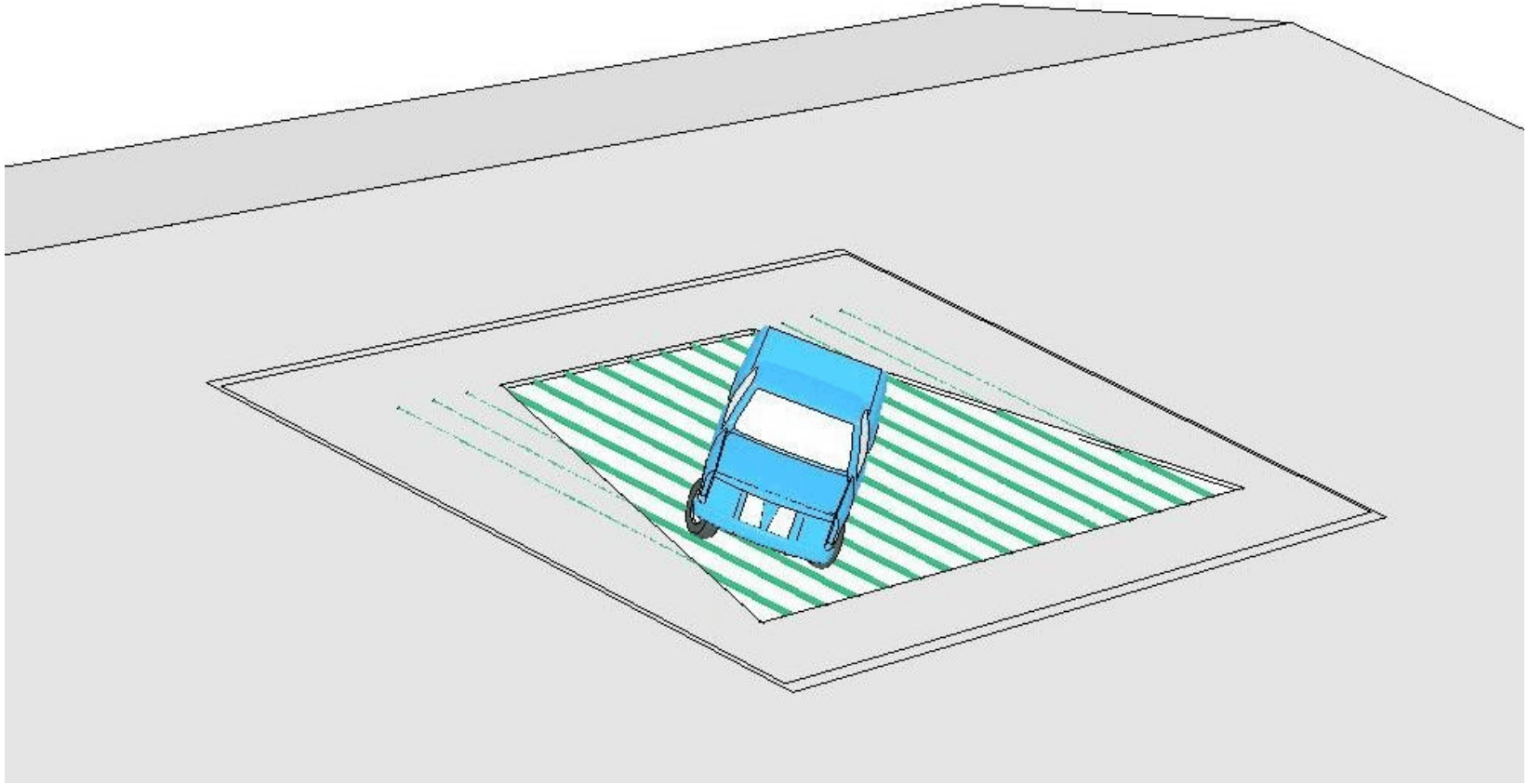

Figure 11. Impact Condition for 2000P Test Vehicle

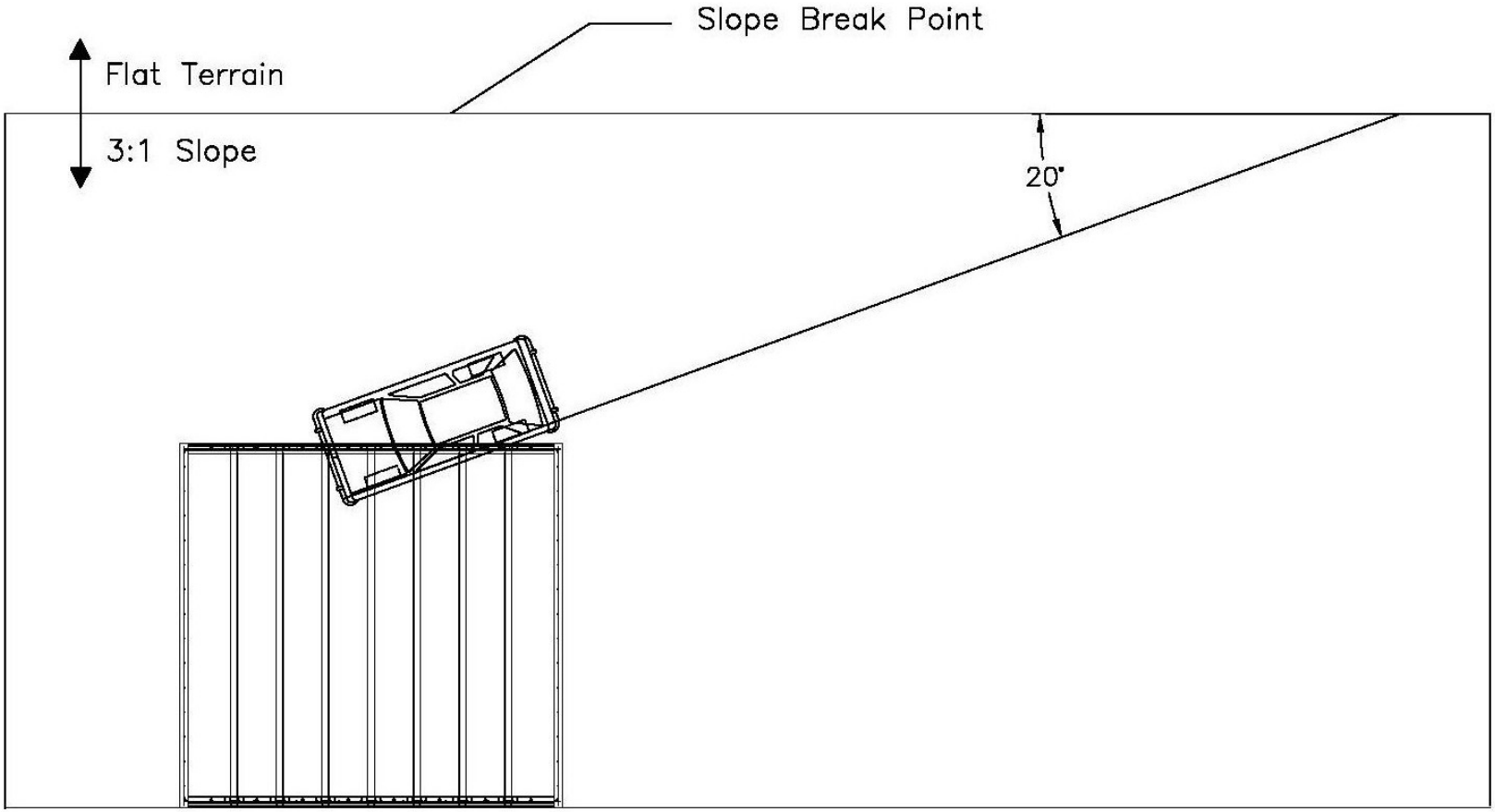

Figure 12. Impact Condition for 820C Test Vehicle

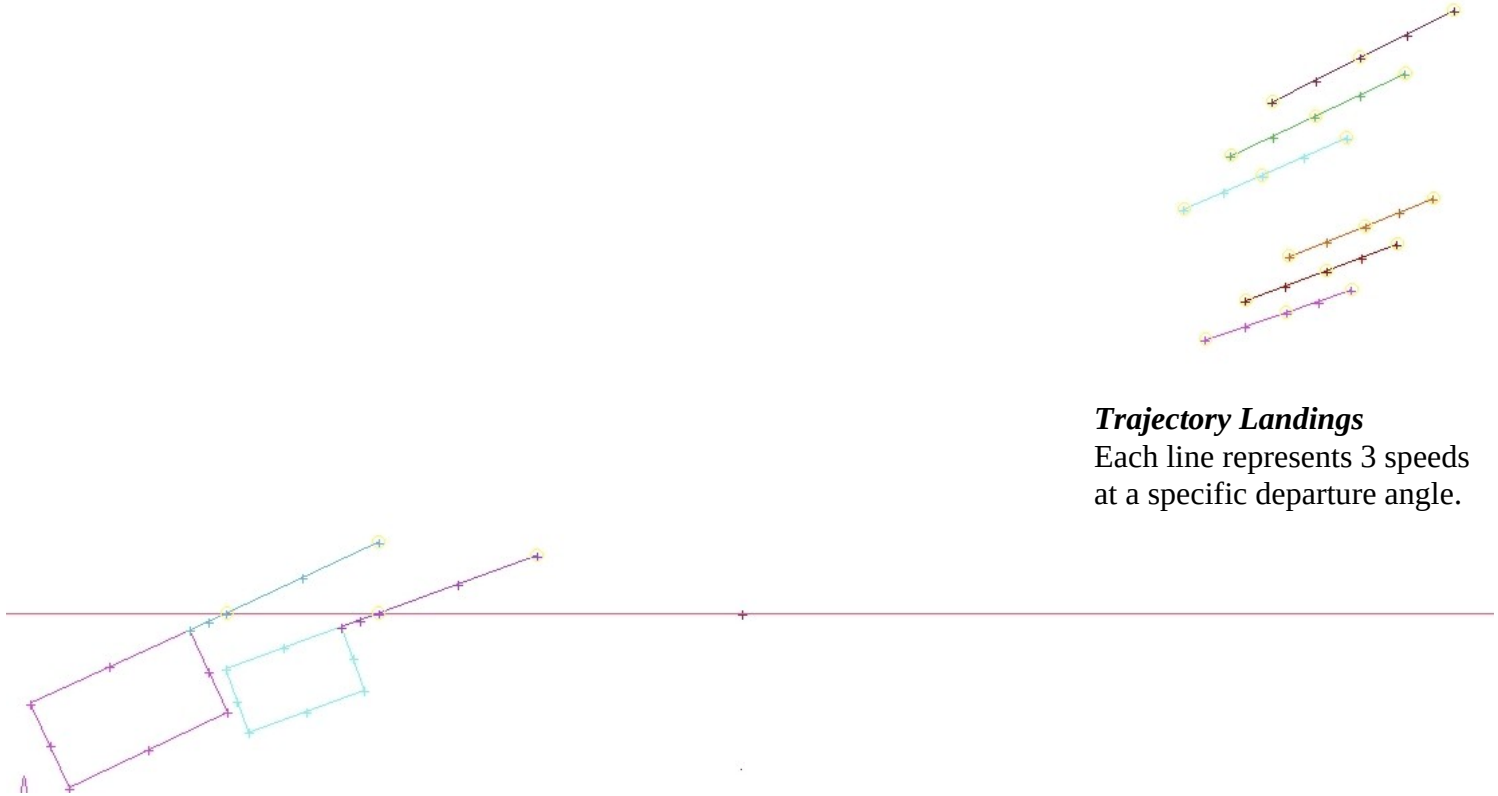

Figure 13. Example of Trajectories Used for Sizing Culvert Grate

5 DESIGN DETAILS

The test installation consisted of a 6.1 m x 6.1 m (20 ft x 20 ft) simulated culvert grate system mounted on top of a mock culvert. Design details are shown in Figures 14 through 20. The corresponding English-unit drawings are shown in Appendix B. Photographs of the test installation are shown in Figure 21.

The culvert grate system was intended to simulate a safety treatment of a 2.1 m (7 ft) high by 6.4 m (21 ft) wide culvert installed on a 3:1 slope. The culvert grate consisted of seven 102-mm (4-in.) diameter schedule 40 steel pipes which were 6.1 m (20 ft) long. The pipes were spaced 762 mm (30 in.) on center with the outside ones 762 mm (30 in.) away from the culvert's outside edges. Note that the 6.1 m (20 ft) span is the maximum allowable length for 102-mm (4-in.) diameter pipe (7). The culvert was constructed 5.8 m (19 ft) downhill from the top of a 3:1 embankment.

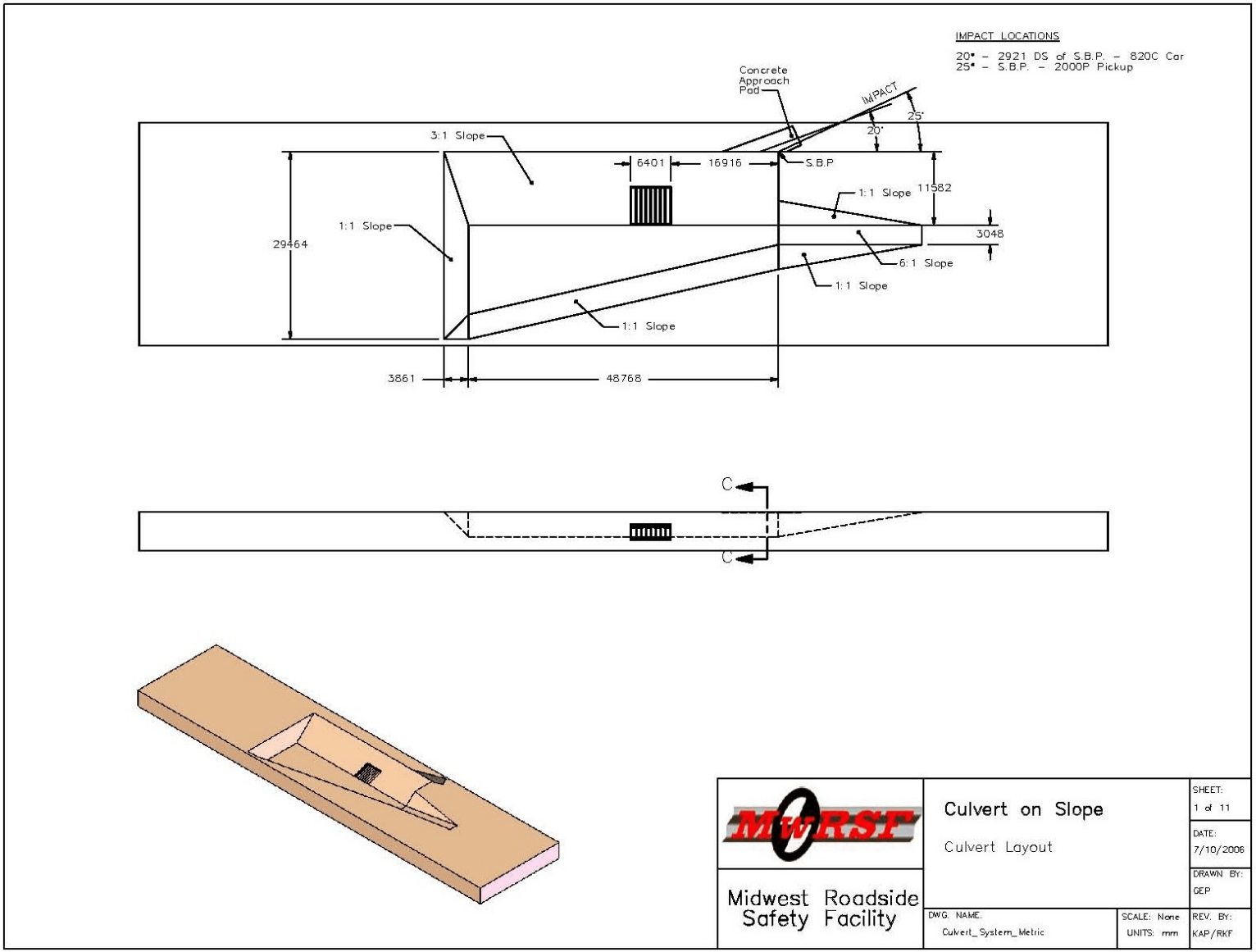

Figure 14. Culvert Layout

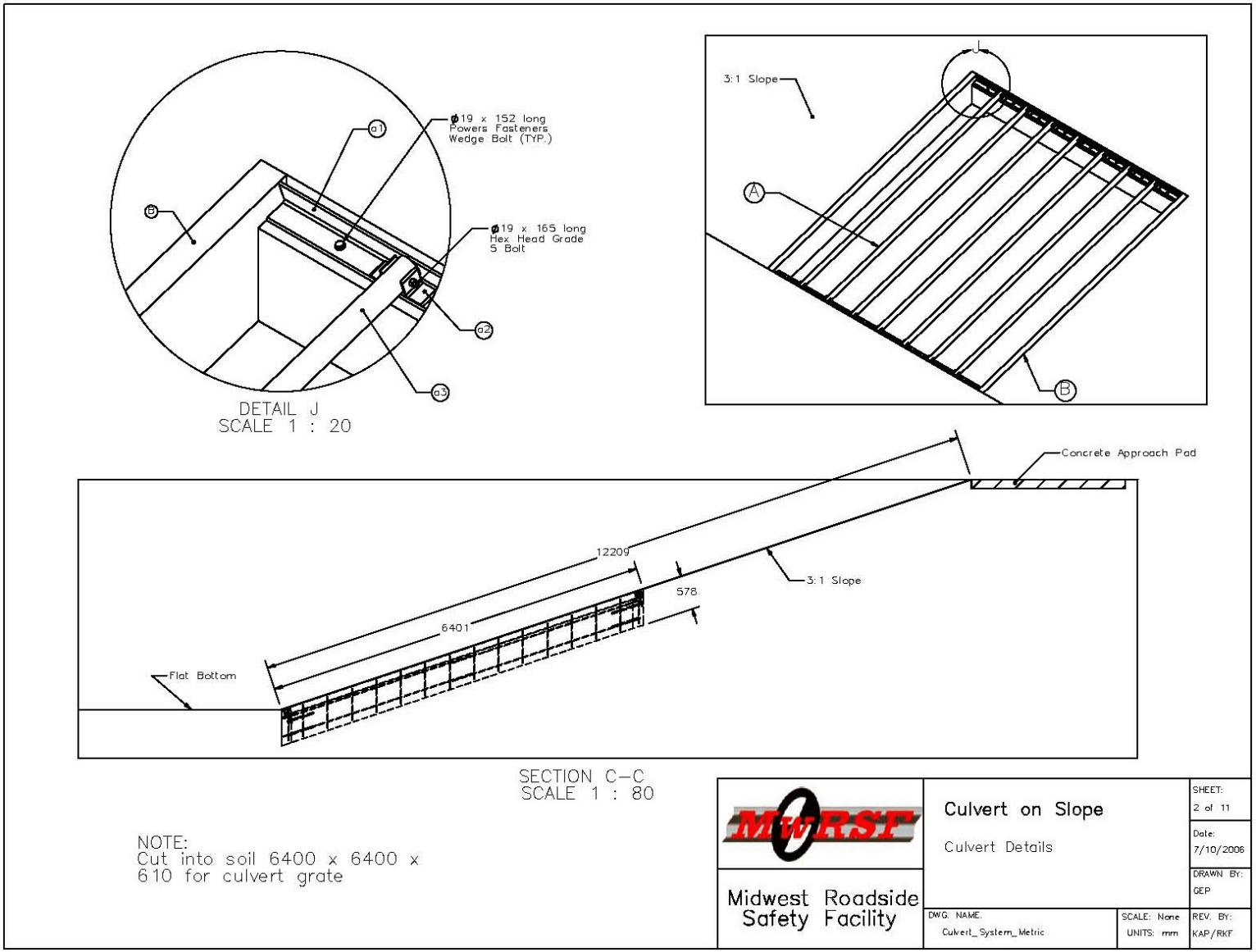

Figure 15. Culvert Details

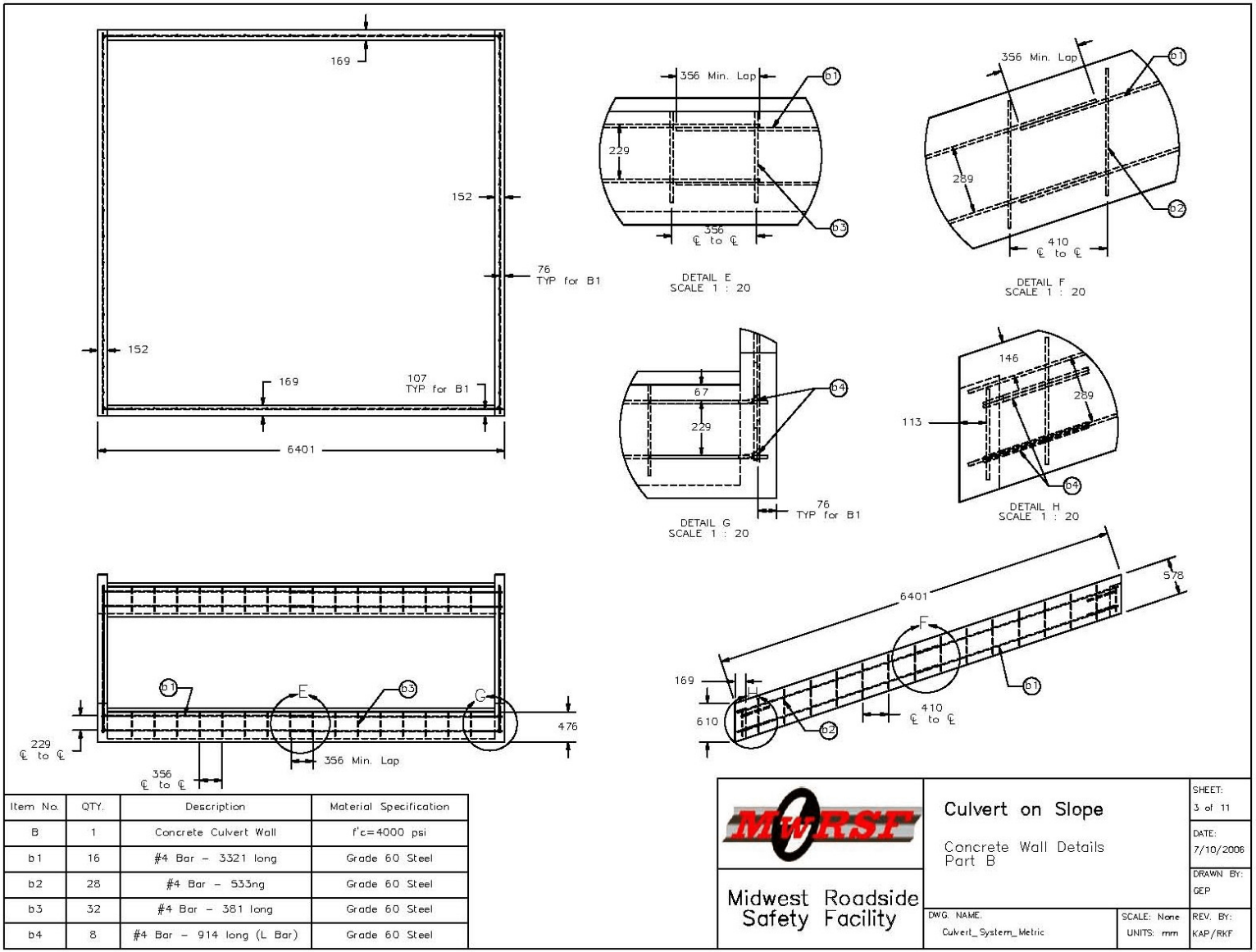

Item No.	QTY.	Description	Material Specification
B	1	Concrete Culvert Wall	f'c=4000 psi
b1	16	#4 Bar – 3321 long	Grade 60 Steel
b2	28	#4 Bar – 533ng	Grade 60 Steel
b3	32	#4 Bar – 381 long	Grade 60 Steel
b4	8	#4 Bar – 914 long (L Bar)	Grade 60 Steel

Figure 16. Concrete Wall Details

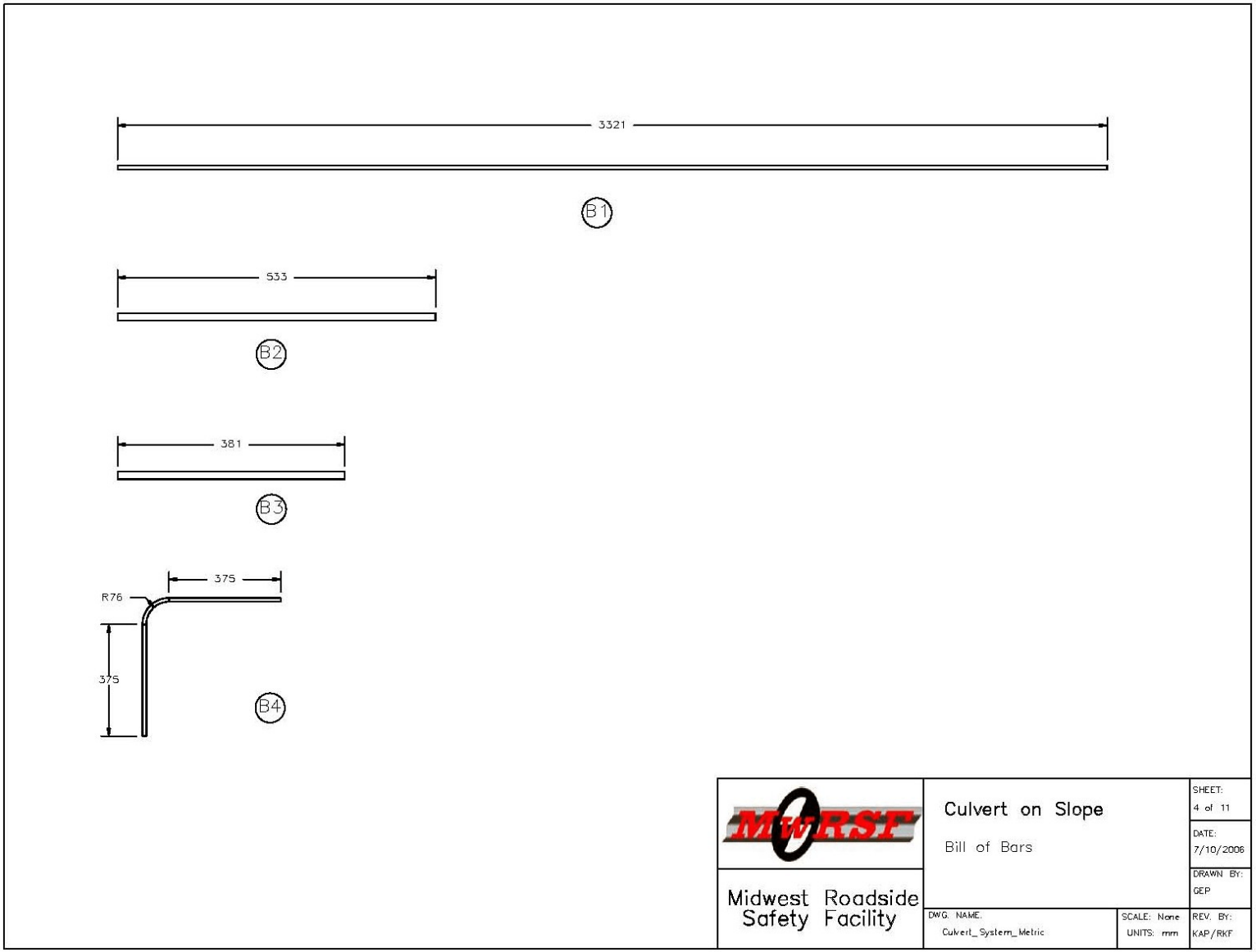

Figure 17. Bill of Bars

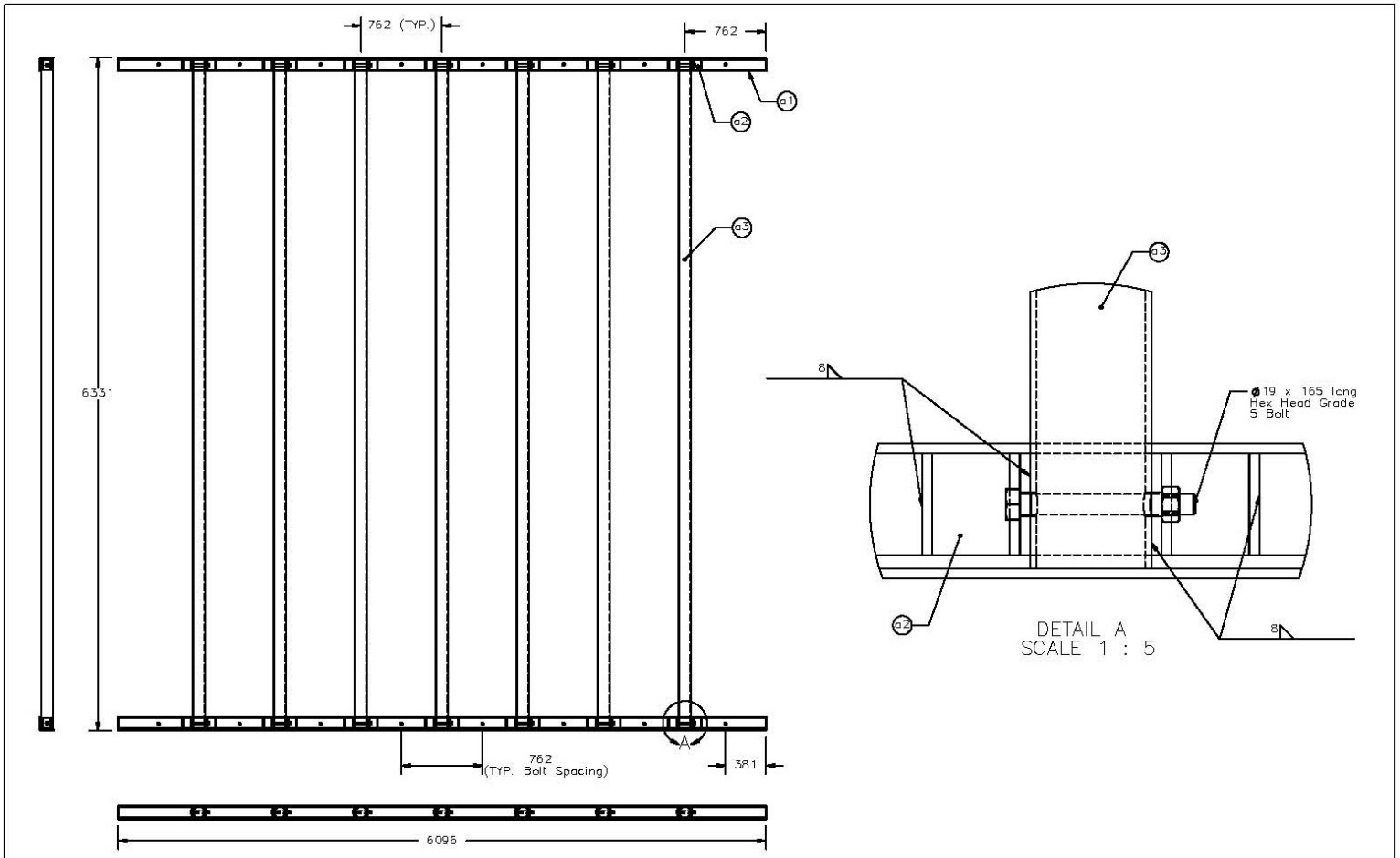

Item No.	QTY.	Description	Material Specification
a1	2	127x127x10 Angle x 6096 long	A36 Steel
a2	28	102x102x10 Angle x 95 long	A36 Steel
a3	7	102 Nominal Dia. x 6400 long Pipe	Schedule 40, A36 Steel
–	14	19 Dia. x 165 long Hex Head Bolt	Grade 5
–	14	19 Dia. Nut	Grade 5

MwRSF
Midwest Roadside Safety Facility

Culvert on Slope

Culvert Grate Details
Part A

SHEET: 5 of 11
DATE: 7/10/2006
DRAWN BY: GEP
DWG. NAME: Culvert_System_Metric
SCALE: None
UNITS: mm
REV. BY: KAP/RKF

Figure 18. Culvert Grate Details

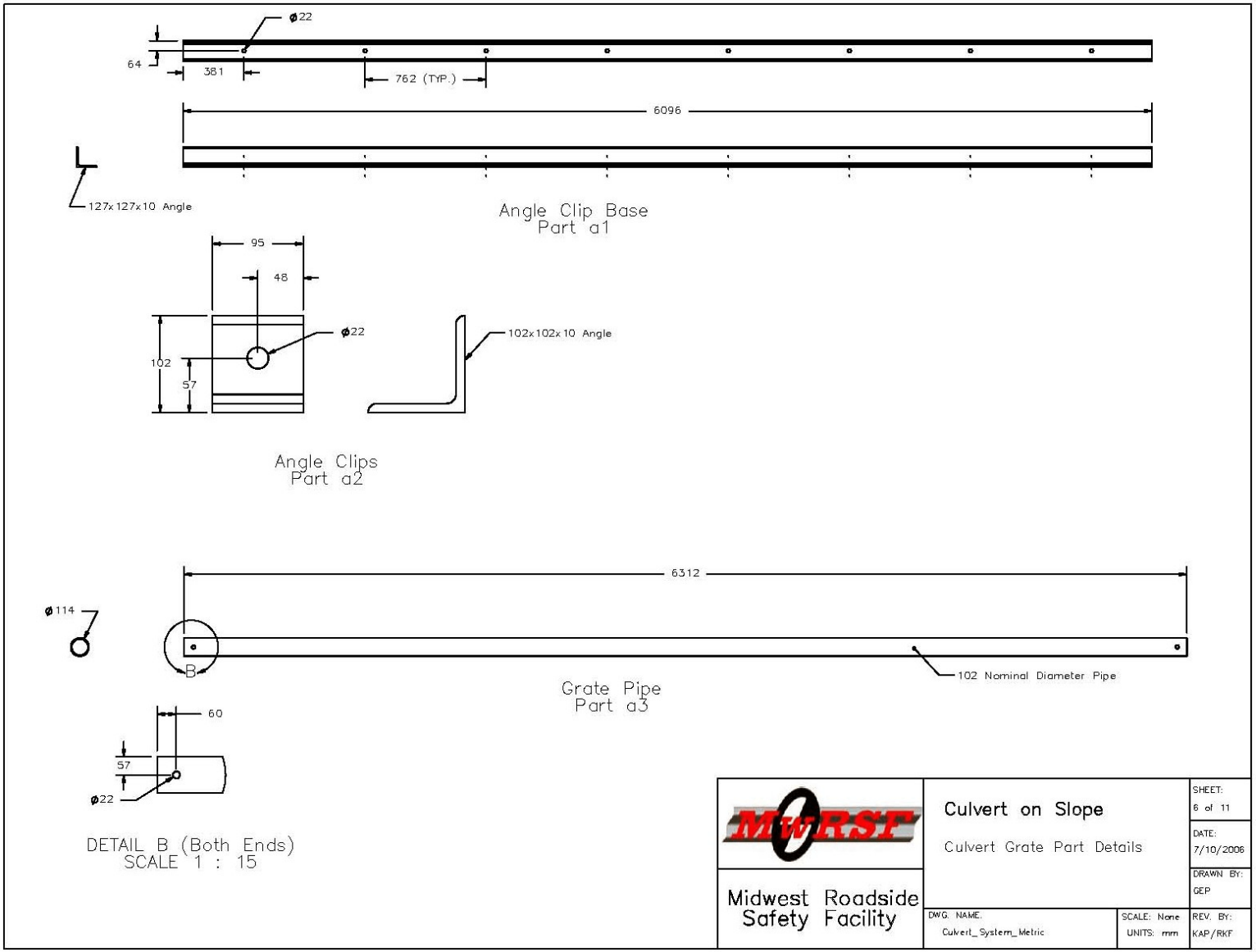

Figure 19. Culvert Grate Part Details

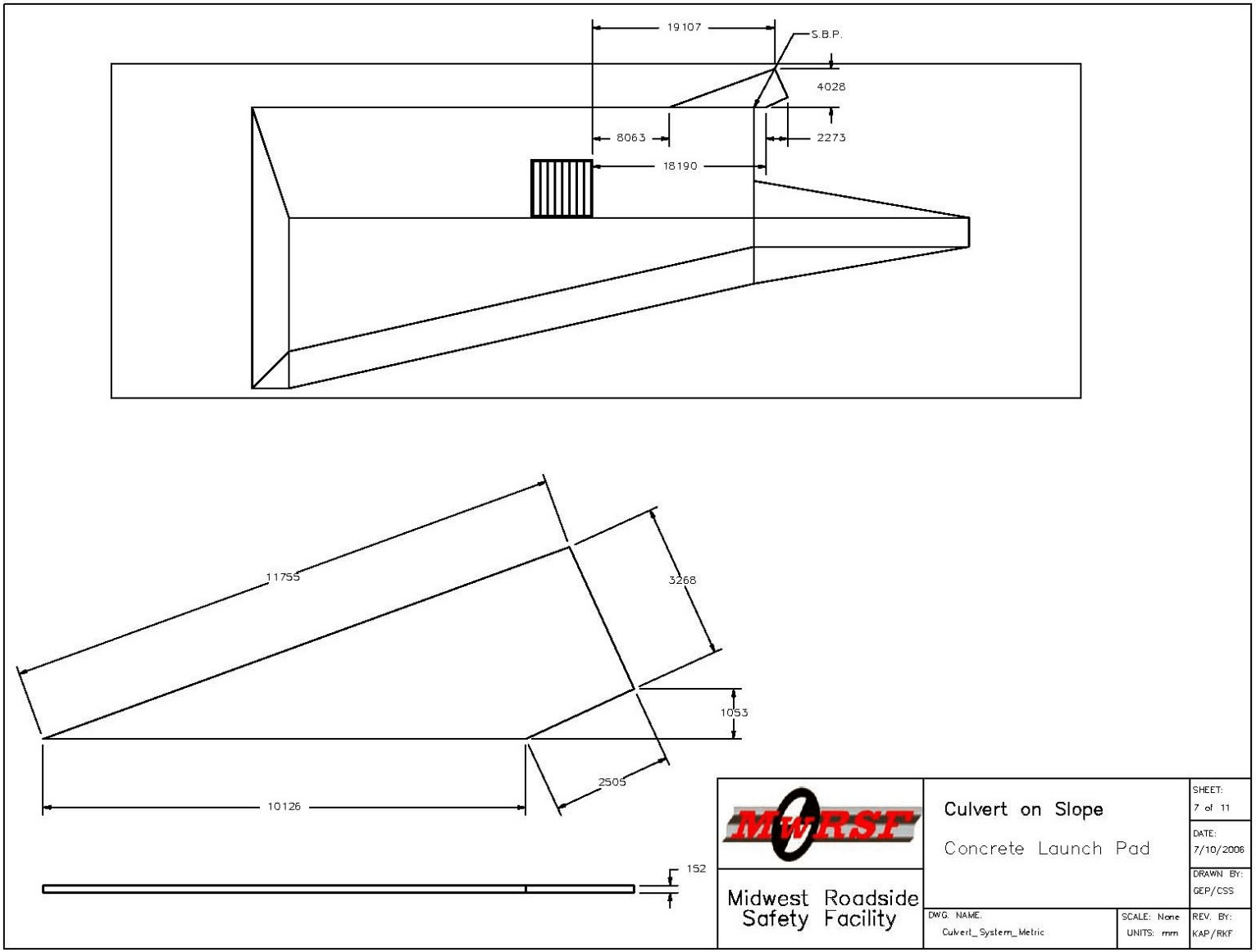

Figure 20. Concrete Launch Pad

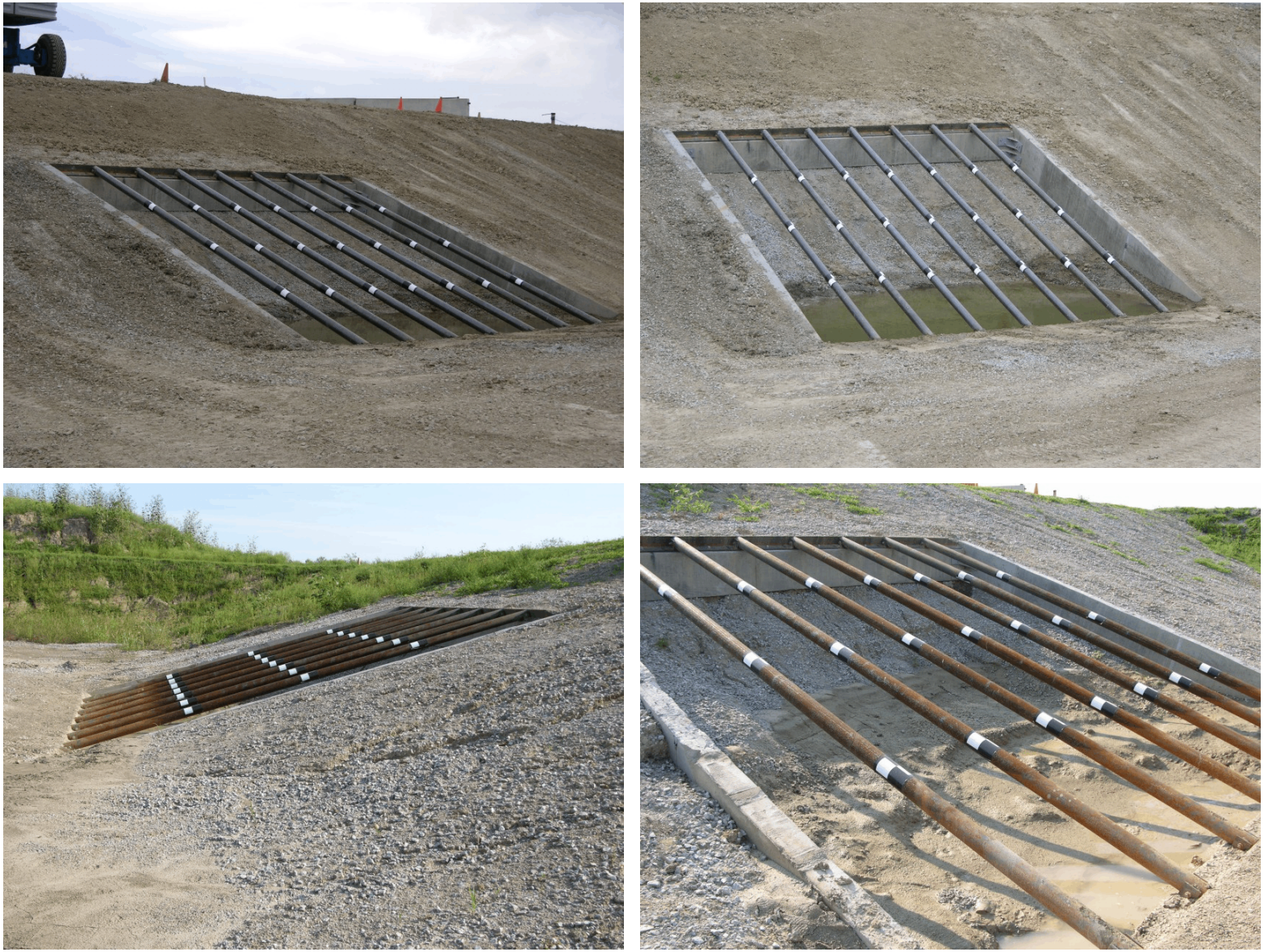

Figure 21. Culvert Grate System Details, Tests KSCG-1 and KSCG-2

6 CRASH TEST KSCG-1

6.1 Test KSCG-1

The 2,034-kg (4,484-lb) pickup truck encroached onto a 3:1 slope approximately 16.9 m (55 ft - 6 in.) upstream of the culvert grate at a speed of 97.9 km/h (60.8 mph) and at an angle of 25.4 degrees. No steer input was imparted to the airborne vehicle prior to landing on the slope. A summary of the test results and sequential photographs are shown in Figure 22. The summary of the test results and sequential photographs in English units are shown in Appendix C. Additional sequential photographs are shown in Figures 23 and 24. Documentary photographs of the crash test are shown in Figures 25 through 27.

6.2 Test Description

Upon encountering the slope breakpoint, the test vehicle became airborne and began to roll to the left, and the front began to pitch downward. At approximately 0.720 sec after encountering the slope, the left-front tire contacted the first pipe on the culvert grate, thus causing it to deform downward. The vehicle then continued to move downstream and downward vertically across the grate which caused the second through the seventh downstream pipes to deform downward due to contact with the front two wheels. At 0.844 sec, the first upstream pipe was deflected again due to contact with the right-rear wheel. The height of the test vehicle began to stabilize as the front neared the downstream end of the culvert. At 0.904 sec, the front of the test vehicle reached the downstream end of the culvert. At this same time, the adjacent steel tubes were deformed sufficiently to allow the bottom of the vehicle's front bumper to impact the edge of the concrete culvert. The impact with the vehicle's bumper forced the front of the truck upward over the edge of the culvert. The rear of the truck traversed the remaining portion of the culvert and, at 1.096 sec, safely regained contact

with the surface of the slope. The test vehicle rolled forward until it contacted a nearly vertical embankment and came to rest 23.50 m (77 ft - 1 in.) downstream and 17.47 m (57 ft - 4 in.) laterally away from the lower-downstream corner of the culvert grate system. The trajectory and final position of the pickup truck are shown in Figures 22 and 28.

6.3 System Damage

Damage to the barrier was moderate, as shown in Figures 29 and 30. System damage consisted mostly of deformed pipes, contact marks on the grate and the concrete culvert wall, and damaged concrete.

All of the culvert pipes displayed some permanent deformation. The highest deformations were found of the first and second upstream culvert grate pipes. Dynamic deflections of the culvert pipes were not obtainable, but the maximum permanent deflection of the culvert pipes was 184 mm (7.25 in.) which was found on the second pipe. Contact marks were also found on all seven grate pipes.

Concrete damage was most significant on the downstream edge of the culvert wall due to the impact of the wheels and tires. The concrete damage consisted of broken and spalled concrete beginning 1,118 mm (44 in.) from the lower, downstream corner of the culvert and extending up the downstream culvert wall for 1,930 mm (76 in.).

6.4 Vehicle Damage

Exterior vehicle damage was minimal, as shown in Figures 31 through 33. Occupant compartment deformations to the right side and center of the floorboard were judged insufficient to cause serious injury to the vehicle occupants. Maximum longitudinal deflections of 6 mm (0.25 in.) were located at several points throughout the right-side floor pan. Maximum lateral deflections of

19 mm (0.75 in.) were located near the left-front corner of the right-side footwell on the floorpan. Maximum vertical deflections of 13 mm (0.5 in.) were located at the front of the right-side footwell on the floorpan . Complete occupant compartment deformations and the corresponding locations are provided in Appendix D.

Minor deformations were observed on the front bumper. The right-front tire was completely deflated due to a 305-mm (12-in.) long cut in the tire. The right-front wheel also displayed major deformation of the rim. The left-front tire was deflated as well. Minor deformations were found on the bottom of both front fenders near the doors. The tailgate of the pickup truck became disengaged from the bed during the impact.

6.5 Occupant Risk Values

The longitudinal and lateral occupant impact velocities were determined to be 7.15 m/s (23.47 ft/s) and 1.09 m/s (3.57 ft/s), respectively. The maximum 0.010-sec average occupant ridedown decelerations in the longitudinal and lateral directions were 4.03 g's and 3.69 g's, respectively. It is noted that the occupant impact velocities (OIVs) and occupant ridedown decelerations (ORDs) were within the suggested limits provided in NCHRP Report No. 350. The THIV and PHD values were determined to be 7.26 m/s (23.82 ft/s) and 4.92 g's, respectively. The results of the occupant risk, as determined from the accelerometer data, are summarized in Figure 22. Results are shown graphically in Appendix E. The results from the rate transducer are shown graphically in Appendix E.

6.6 Discussion

The analysis of the test results for test no. KSCG-1 showed that the 2000P vehicle was capable of safely traversing the culvert grate system with the largest recommended unsupported pipe

length. There were no detached elements nor fragments which showed potential for penetrating the occupant compartment nor presented undue hazard to other traffic. Deformations of, or intrusions into, the occupant compartment that could have caused serious injury did not occur. The test vehicle remained upright during and after the collision. Vehicle roll, pitch, and yaw angular displacements were noted, but they were deemed acceptable because they did not adversely influence occupant risk safety criteria nor cause rollover. It is noted that the occupant impact velocities (OIV) and occupant ridedown decelerations (ORD) were within the suggested limits provided in NCHRP Report No. 350. After collision, the vehicle's trajectory did not intrude into adjacent traffic lanes. In addition, the vehicle's exit angle was less than 60 percent of the impact angle. Therefore, test no. KSCG-1 conducted on the culvert grate system was determined to be acceptable according to the TL-3 safety performance criteria found in NCHRP Report No. 350. It should also be noted that this test successfully evaluated the structural capacity of the system through the choice of a CIP that maximized the loading of the culvert grate.

0.000 sec | 0.524 sec | 0.752 sec | 0.906 sec | 1.346 sec

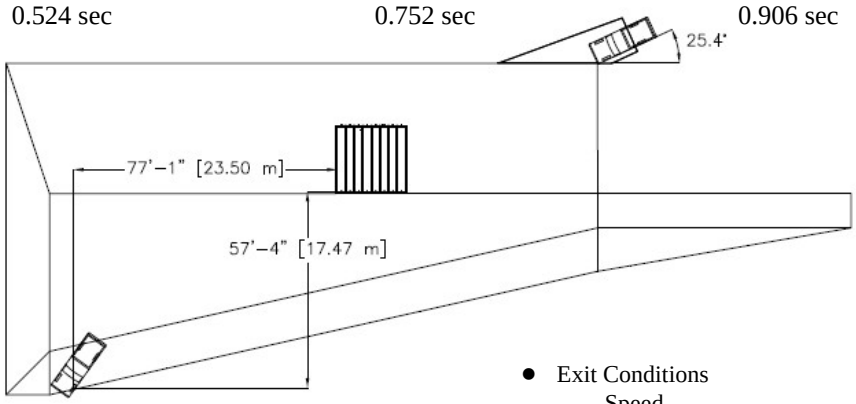

- Test Agency ..... MwRSF
- Test Number KSCG-1
- Date 7/20/06
- NCHRP 350 Test Designation 3-11
- Test Article ..... Transverse Culvert Safety Grate
- Total Length ..... 6.1 m
- Total Width ..... 6.1 m
- Placement ..... 5.81 m down from 3:1 slope breakpoint
- Key Elements - Grate Piping
  - Type ..... Schedule 40 pipe
  - Diameter ..... 102 mm
  - Length ..... 6.1 m
  - Spacing ..... 762 mm
- Type of Soil ..... NA
- Test Vehicle
  - Type/Designation 2000P
  - Make and Model ..... 2000 Chevrolet C2500
  - Curb ..... 2,196 kg
  - Test Inertial ..... 2,034 kg
  - Gross Static ..... 2,034 kg
- Impact Conditions
  - Speed ..... 97.9 km/h
  - Angle (trajectory) ..... 25.4 deg
- Exit Conditions
  - Speed ..... 61.5 km/h
  - Angle ..... 31.0 deg
- Post-Impact Trajectory
  - Vehicle Stability ..... Satisfactory
  - Stopping Distance ..... 23.50 m downstream and 17.47 m laterally from lower-downstream corner of culvert
- Occupant Impact Velocity
  - Longitudinal ..... 7.15 m/s < 12 m/s
  - Lateral (not required) ..... 1.09 m/s
- Occupant Ridedown Deceleration (10 msec avg.)
  - Longitudinal ..... 4.03 g's < 20 g's
  - Lateral (not required) ..... 3.69 g's
- THIV (not required) ..... 7.62 m/s
- PHD (not required) ..... 4.92 g's
- Test Article Damage ..... Moderate
- Test Article Deflections
  - Permanent Set ..... 184 mm
  - Dynamic ..... NA
  - Working Width ..... NA
- Vehicle Damage ..... Moderate
  - VDS[10] 1-FC-1
  - CDC[11] 1-RFWE2
  - OCDI F000000000
  - Maximum Deformation ..... 19 mm

Figure 22. Summary of Test Results and Sequential Photographs, Test KSCG-1

0.000 sec

0.386 sec

0.592 sec

0.610 sec

0.738 sec

0.782 sec

0.904 sec

0.870 sec

1.096 sec

1.024 sec

Figure 23. Additional Sequential Photographs, Test KSCG-1

0.000 sec

0.350 sec

0.630 sec

0.832 sec

1.060 sec

Figure 24. Additional Sequential Photographs, Test KSCG-1

Figure 25. Documentary Photographs, Test KSCG-1

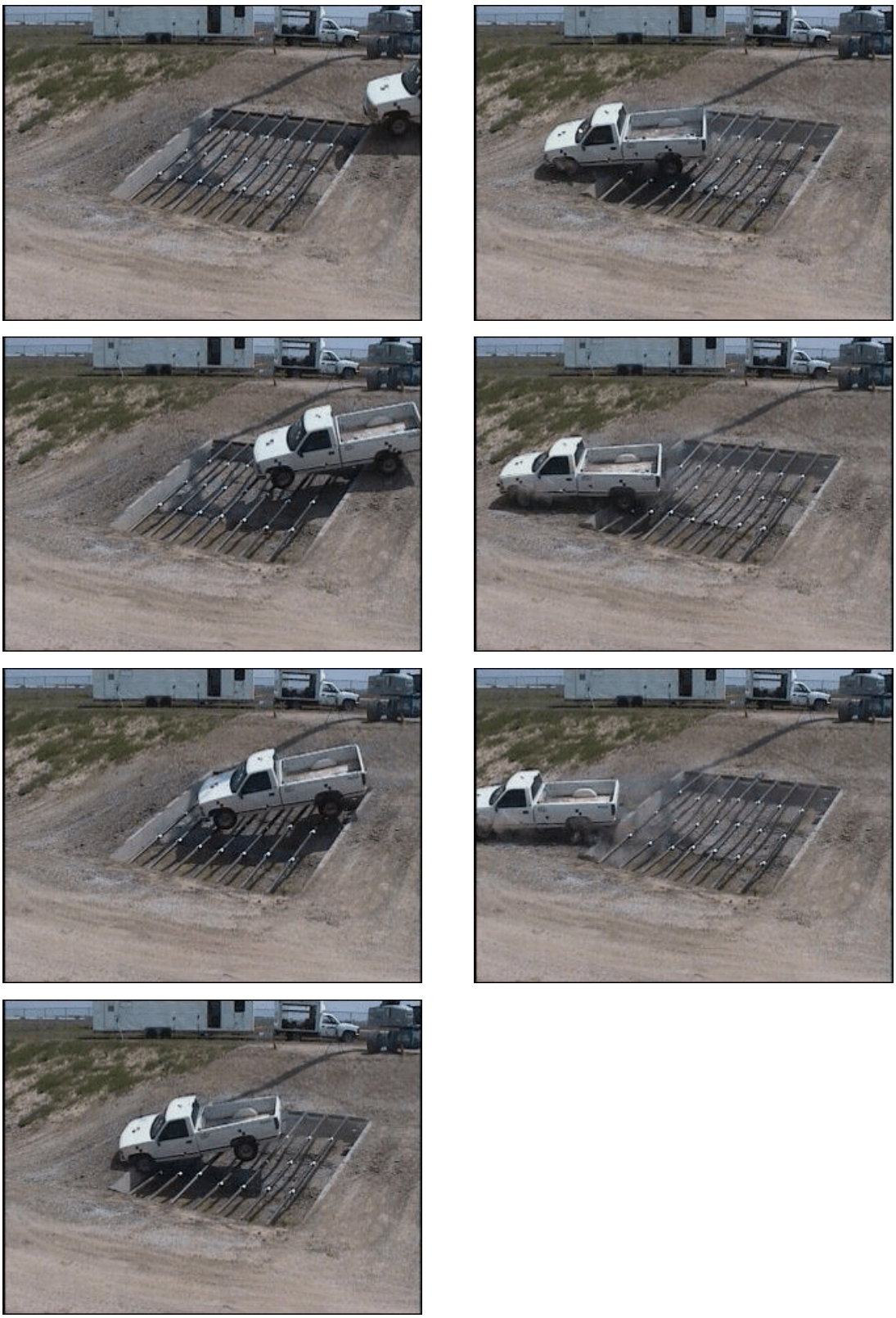

Figure 26. Documentary Photographs, Test KSCG-1

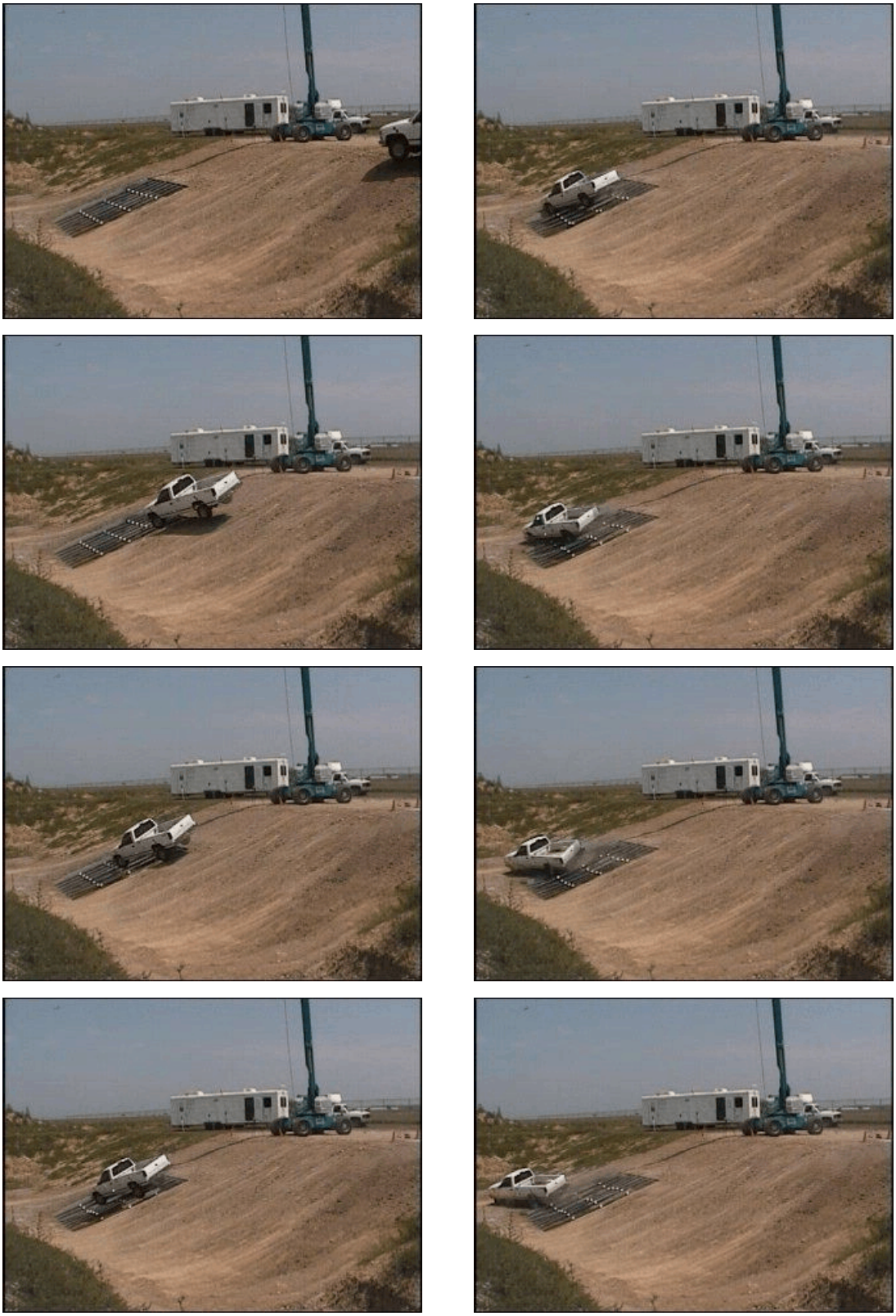

Figure 27. Documentary Photographs, Test KSCG-1

Figure 28. Vehicle Final Position and Trajectory Marks, Test KSCG-1

Figure 29. Culvert Grate System Damage, Test KSCG-1

Figure 30. Culvert Grate System Damage, Test KSCG-1

Figure 31. Vehicle Damage, Test KSCG-1

Figure 32. Vehicle Damage, Test KSCG-1

Figure 33. Occupant Compartment Damage, Test KSCG-1

7 CRASH TEST KSCG-2

7.1 Test KSCG-2

The 906-kg (1,997-lb) small car was propelled off of the edge of a 3:1 slope approximately 14.0 m (45 ft - 11 in.) upstream of the culvert grate at a speed of 98.6 km/h (61.3 mph) and at an angle of 18.7 degrees. No steer input was imparted to the airborne vehicle prior to landing on the slope. A summary of the tests results and sequential photographs are shown in Figure 34. The summary of the test results and sequential photographs in English units are shown in Appendix C. Additional sequential photographs are shown in Figure 35. Documentary photographs of the crash test are shown in Figures 36 and 37.

7.2 Test Description

Upon encountering the slope breakpoint, the test vehicle became airborne and began to roll to the left, and the front began to pitch downward. The entire vehicle was airborne as it approached the culvert grate. At 0.654 sec after encountering the slope breakpoint, the left-front tire was fully extended when it made contact with the slope just in front of the culvert grate. As the small car continued to travel downstream, the left-front tire impacted the fifth downstream culvert pipe and deflected it downward at 0.716 sec before the left-front suspension became compressed. The right-front tire then impacted the slope above the culvert grate. The small car continued downstream until the vehicle's right-front tire encountered the culvert grate. The vehicle began to slowly yaw to the left as both front wheels traversed the upper corner of the culvert grate. The vehicle continued to traverse the culvert grate and exited the culvert grate system at 0.848 sec, which left only the rear tires traversing the culvert grate. By 0.976 sec, the entire test vehicle had exited the culvert grate system. Thereafter, the vehicle continued downstream and yawed slowly to the left. The vehicle then

continued downstream until it came to rest on the 1:1 upslope approximately 25.60 m (84 ft) downstream and 9.75 m (32 ft) laterally away from the lower-downstream corner of the culvert grate. The trajectory and final position of the small car are shown in Figures 34 and 38.

7.3 Culvert Grate System Damage

Damage to the system was minimal, as shown in Figure 39. System damage consisted of contact marks on the grate pipes and concrete culvert wall and damaged concrete. None of the culvert pipes displayed permanent deformation. Contact marks were found on all seven grate pipes. Concrete damage was observed on the upper portion of the downstream edge of the culvert wall due to the impact of the wheels and tires. The concrete damage consisted of broken and spalled concrete beginning 508 mm (20 in.) from the upper, downstream corner of the culvert and extending down the downstream culvert wall for 559 mm (22 in.).

7.4 Vehicle Damage

Exterior vehicle damage was minimal, as shown in Figures 40 through 43. Interior occupant compartment damage was negligible with no significant observable deformations of the occupant compartment observed. The occupant compartment deformations and the corresponding locations are provided in Appendix D.

Deformations were observed on the front bumper and the radiator. Both of the front tires were completely deflated and unseated from the rims. The right-rear tire was deflated as well. The rims of both front wheels displayed large deformations due to impact with the culvert pipes. Minor deformation was found on both front fenders. Deformations were also observed on both the oil pan and the exhaust pipe. The right side of the rear bumper became partially disengaged.

7.5 Occupant Risk Values

The longitudinal and lateral occupant impact velocities were determined to be 3.80 m/s (12.47 ft/s) and 2.03 m/s (6.65 ft/s), respectively. The maximum 0.010-sec average occupant ridedown decelerations in the longitudinal and lateral directions were 14.38 g's and 3.58 g's, respectively. It is noted that the occupant impact velocities (OIVs) and occupant ridedown decelerations (ORDs) were within the suggested limits provided in NCHRP Report No. 350. The THIV and PHD values were determined to be 4.36 m/s (14.30 ft/s) and 14.65 g's, respectively. The results of the occupant risk, as determined from the accelerometer data, are summarized in Figure 34. Results are shown graphically in Appendix F. The results from the rate transducer are shown graphically in Appendix F.

7.6 Discussion

The analysis of the test results for test no. KSCG-2 showed that the 820C vehicle was capable of safely traversing the culvert grate system with the largest recommended unsupported pipe length. There were no detached elements nor fragments which showed potential for penetrating the occupant compartment nor presented undue hazard to other traffic. Deformations of, or intrusions into, the occupant compartment that could have caused serious injury did not occur. The test vehicle remained upright during and after the collision. Vehicle roll, pitch, and yaw angular displacements were noted, but they were deemed acceptable because they did not adversely influence occupant risk safety criteria nor cause rollover. It is noted that the occupant impact velocities (OIV) and occupant ridedown decelerations (ORD) were within the suggested limits provided in NCHRP Report No. 350. After collision, the vehicle's trajectory did not intrude into adjacent traffic lanes. In addition, the vehicle's exit angle was less than 60 percent of the impact angle. Therefore, test no. KSCG-2

conducted on the culvert grate system was determined to be acceptable according to the TL-3 safety performance criteria found in NCHRP Report No. 350.

0.000 sec | 0.654 sec | 0.792 sec | 1.174 sec | 1.836 sec

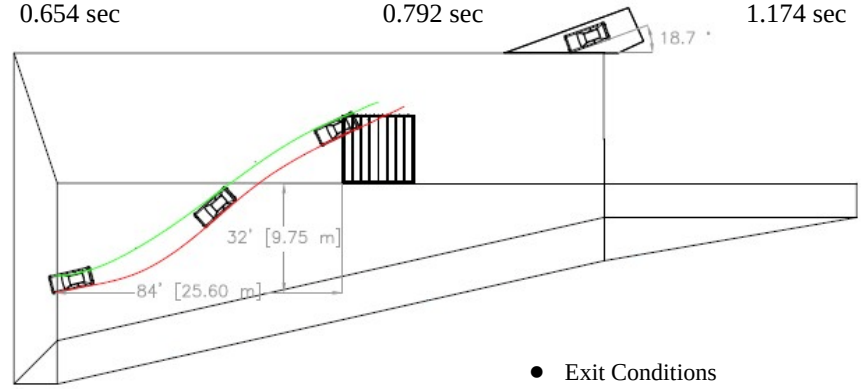

- Test Agency . . . . . MwRSF
- Test Number KSCG-2
- Date 8/23/06
- NCHRP 350 Test Designation 3-10
- Test Article . . . . . Transverse Culvert Safety Grate
- Total Length . . . . . 6.1 m
- Total Width . . . . . 6.1 m
- Placement . . . . . 5.81 m down from the 3:1 slope breakpoint
- Key Elements - Grate Piping
  - Type . . . . . Schedule 40 pipe
  - Diameter . . . . . 102 mm
  - Length . . . . . 6.1 m
  - Spacing . . . . . 762 mm
- Type of Soil . . . . . NA
- Test Vehicle
  - Type/Designation 820C
  - Make and Model . . . . . 1999 Chevrolet Metro
  - Curb . . . . . 836 kg
  - Test Inertial . . . . . 831 kg
  - Gross Static . . . . . 906 kg
- Impact Conditions
  - Speed . . . . . 98.6 km/h
  - Angle (trajectory) . . . . . 18.7 deg
- Exit Conditions
  - Speed . . . . . NA
  - Angle . . . . . NA
- Post-Impact Trajectory
  - Vehicle Stability . . . . . Satisfactory
  - Stopping Distance . . . . . 25.60 m downstream and 9.75 m laterally from lower-downstream corner of culvert
- Occupant Impact Velocity
  - Longitudinal . . . . . 3.80 m/s < 12 m/s
  - Lateral . . . . . 2.03 m/s < 12 m/s
- Occupant Ridedown Deceleration (10 msec avg.)
  - Longitudinal . . . . . 14.38 g's < 20 g's
  - Lateral . . . . . 3.58 g's < 20 g's
- THIV (not required) . . . . . 4.36 m/s
- PHD (not required) . . . . . 14.65 g's
- Test Article Damage . . . . . Minimal
- Test Article Deflections
  - Permanent Set . . . . . 0 mm
  - Dynamic . . . . . NA
  - Working Width . . . . . NA
- Vehicle Damage . . . . . Minimal
  - VDS[10] 1-FD-1
  - CDC[11] 1-FDWW1
  - OCDI F000000000
  - Maximum Deformation . . . . . None observed

Figure 34. Summary of Test Results and Sequential Photographs, Test No. KSCG-2

0.000 sec

0.670 sec

0.782 sec

0.866 sec

1.032 sec

Figure 35. Additional Sequential Photographs, KSCG-2

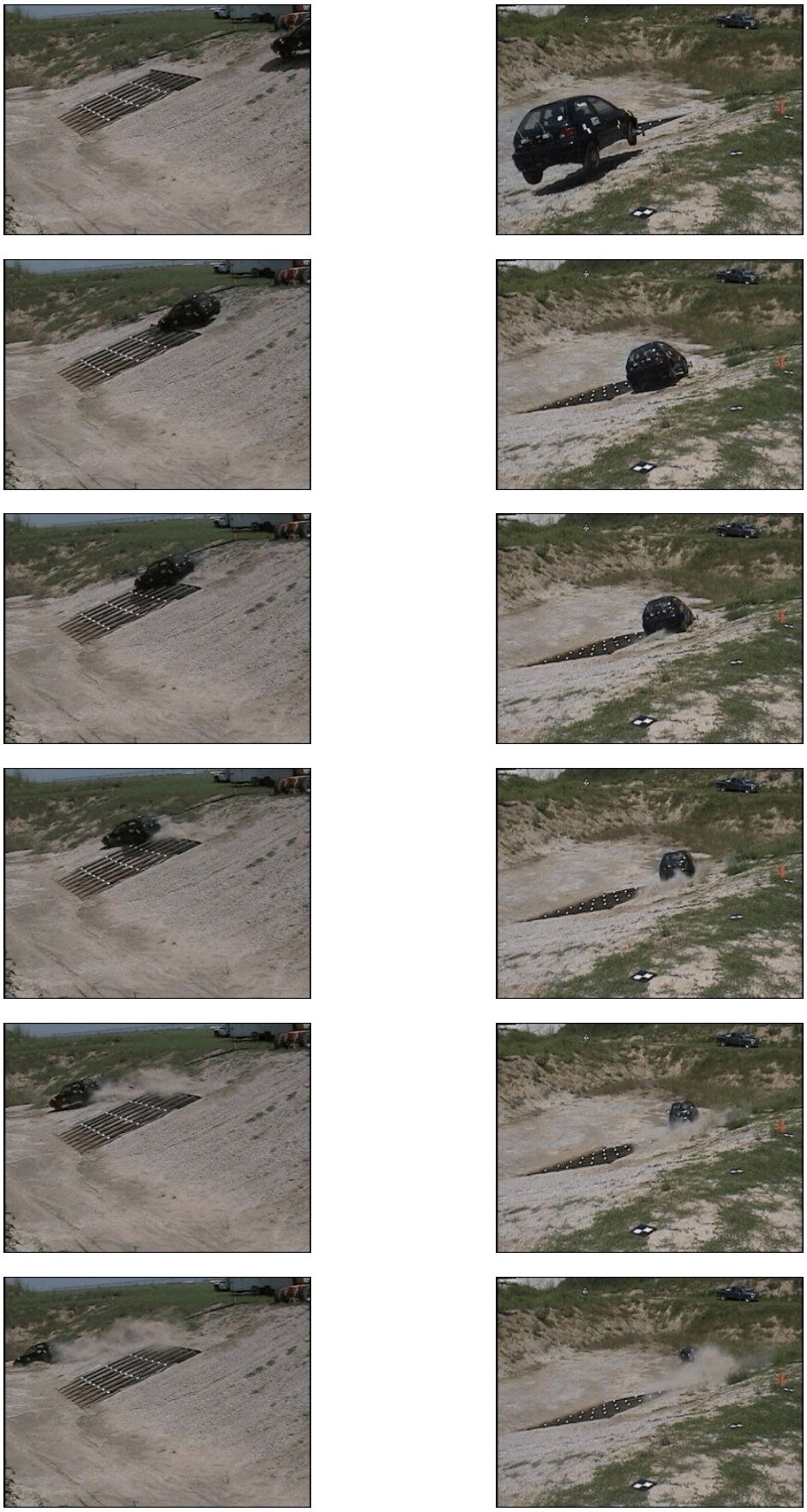

Figure 36. Documentary Photographs, KSCG-2

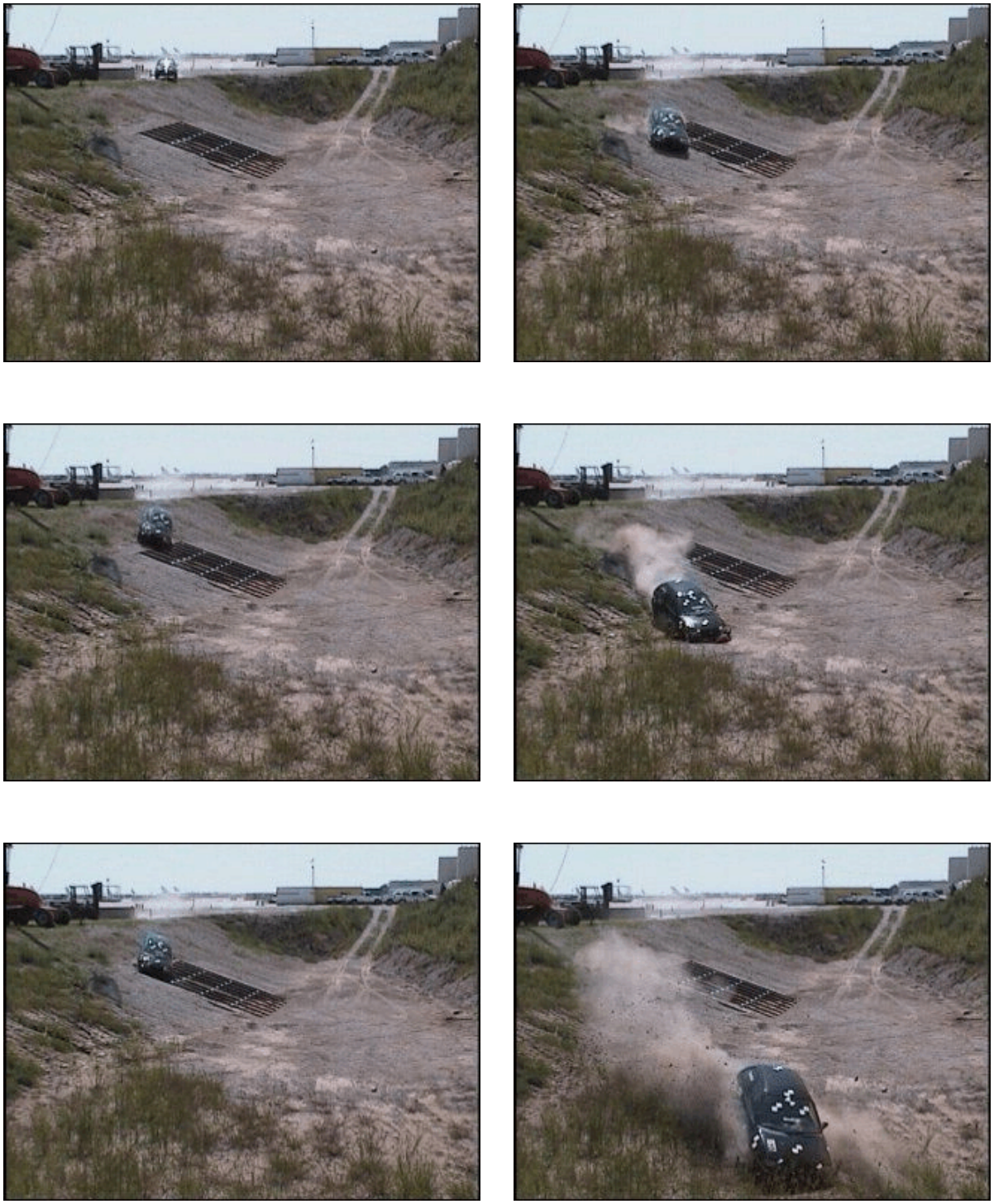

Figure 37. Documentary Photographs, Test KSCG-2

Figure 38. Vehicle Final Position and Trajectory Marks, Test KSCG-2

Figure 39. Culvert Grate System Damage, Test KSCG-2

Figure 40. Vehicle Damage, Test KSCG-2

Figure 41. Vehicle Damage, Test KSCG-2

Figure 42. Undercarriage Damage, Test KSCG-2

Figure 43. Occupant Compartment Damage, Test KSCG-2

8 SUMMARY, CONCLUSIONS, AND RECOMMENDATIONS

Two full-scale crash tests were conducted in order to examine the safety performance of culvert grates recommended by the AASHTO RDG. The first test involved a 2000P test vehicle impacting the upstream portion of a 6.1-m x 6.1-m (20-ft x 20-ft) culvert grate. The second test involved an 820C test vehicle striking the simulated culvert grate with the left-side tires, while the right-side tires encountered the slope above the grate. A summary of the safety performance evaluation is provided in Table 4. This testing clearly demonstrated that the culvert safety grates recommended in the AASHTO RDG meet the safety performance evaluation guidelines recommended by NCHRP Report No. 350. Further, these findings clearly support historical studies showing that culvert grates provide the most cost beneficial safety treatment for cross drainage culverts.

AASHTO's recommendations (7) for safety crates have shown that culvert openings found on slopes as steep as 3:1 can be safely treated and made traversable. As such, errant vehicles are often allowed to travel to the bottom of the fill slope or culvert grate system. Therefore, safe roadside practices should be maintained for the design of the fill slope region surrounding the culvert opening, including the area beyond the bottom of the culvert.

The culvert grate details used within this study were adapted from existing standards utilized by several State Departments of Transportation (DOTs). As such, minor changes were made to the hardware that was used to attach the pipes to the simulated culvert walls. The existing culvert grate details used by the various State DOTs would remain acceptable for use in treating real-world culvert openings as long as the structural capacity of alternative anchoring hardware is approximately equivalent to that tested and evaluated herein.

Large culvert openings can be made traversable using the pipe grate system described herein. Pipe grate systems placed on culvert openings should not significantly decrease the hydraulic capacity of the culvert structure. As such, pipe grate systems must be hydraulically efficient. Therefore, designers and engineers should consider alternative safety treatments for culvert openings, such as shielding, when concerns for reduced hydraulic capacity or flow arise due to anticipated clogging of a grated culvert system.

During the pickup truck test (test no. KSCG-1), the second pipe of the grate system had a maximum permanent set of 184 mm (7.25 in.). Unfortunately, no research was performed in order to determine the ability of a deformed pipe grate system to withstand a second impact event. Therefore, future research is recommended to explore the effect of multiple impacts on a grate system as well as to develop guidelines for repairing and/or replacing the deformed pipes and associated attachment hardware.

Table 4. Summary of Safety Performance Evaluation Results

Evaluation Factors	Evaluation Criteria		Test KSCG-1	Test KSCG-2
Structural Adequacy	A.	Test article should contain and redirect the vehicle or bring the vehicle to a controlled stop; the vehicle should not penetrate, underride, or override the installation although controlled lateral deflection of the test article is acceptable.	S	S
Occupant Risk	D.	Detached elements, fragments or other debris from the test article should not penetrate or show potential for penetrating the occupant compartment, or present an undue hazard to other traffic, pedestrians, or personnel in a work zone. Deformation of, or intrusions into, the occupant compartment that could cause serious injuries should not be permitted.	S	S
	F.	The vehicle should remain upright during and after collision although moderate roll, pitching, and yawing are acceptable.	S	S
	H.	Longitudinal and lateral occupant impact velocities should fall below the preferred value of 9 m/s (29.5 ft/s), or at least below the maximum allowable value of 12 m/s (39.4 ft/s).	NA	S
	I.	Longitudinal and lateral occupant ridedown accelerations should fall below the preferred value of 15 g's, or at least below the maximum allowable value fo 20 g's.	NA	S
Vehicle Trajectory	K.	After collision it is preferable that the vehicle's trajectory not intrude into adjacent traffic lanes.	S	S
	L.	The occupant impact velocity in the longitudinal direction should not exceed 12 m/s (39.4 ft/s) and the occupant ridedown acceleration in the longitudinal direction should not exceed 20 g's.	S	NA
	M.	The exit angle from the test article preferably should be less than 60 percent of test impact angle, measured at time of vehicle loss of contact with test device.	S	S

S - Satisfactory
U - Unsatisfactory
NA - Not Applicable

9 REFERENCES

1. Kohutek, T.L. and Ross, H.E., Jr., *Safety Treatment of Roadside Culverts on Low Volume Roads*, Research Report 225-1, Texas Transportation Institute, Texas A&M University, College Station, Texas, 1979.

2. Ross, H.E., Jr., Hirsch, T.J., Jackson, B., Jr., and Sicking, D.L., *Safety Treatment of Roadside Cross-Drainage Structures*, Research Report 280-1, Texas Transportation Institute, Texas A&M University, College Station, Texas, 1981.

3. Beneficio, D., *Selection of Safety Treatments for Cross-Drainage Culverts*, Master of Science Thesis, University of Nebraska-Lincoln, Lincoln, Nebraska, December 2007.

4. Ross, H.E., Jr., Sicking, D.L., Hirsch, T.J., Cooner, H.D., Nixon, J.F., Fox, S.V., and Damon, C.P., *Safety Treatment of Roadside Drainage Structures*, Transportation Research Record No. 868, Transportation Research Board, National Academy of Science, Washington, D.C., 1982.

5. *Recommended Procedures for Vehicle Crash Testing of Highway Appurtenances*, Transportation Research Circular No. 191, Transportation Research Board, National Academy of Sciences, Washington, D.C., February 1978.

6. Bryden, J.E., *Evaluation of a Culvert-End Safety Grate*, Report No. FHWA/NY/RR-90/151, Engineering Research and Development Bureau, New York State Department of Transportation, August 1990.

7. *Roadside Design Guide*, American Association of State Highway and Transportation Officials (AASHTO), Washington, D.C., 1996.

8. Ross, H.E., Sicking, D.E., Zimmer, R.A., and Michie, J.D., *Recommended Procedures for the Safety Performance Evaluation of Highway Features*, National Cooperative Highway Research Program (NCHRP) Report No. 350, Transportation Research Board, Washington, D.C., 1993.

9. Hinch, J., Yang, T-L, and Owings, R., *Guidance Systems for Vehicle Testing*, ENSCO, Inc., Springfield, VA 1986.

10. *Vehicle Damage Scale for Traffic Investigators*, Second Edition, Technical Bulletin No. 1, Traffic Accident Data (TAD) Project, National Safety Council, Chicago, Illinois, 1971.

11. *Collision Deformation Classification - Recommended Practice J224 March 1980*, Handbook Volume 4, Society of Automotive Engineers (SAE), Warrendale, Pennsylvania, 1985.

10 APPENDICES

APPENDIX A

Impact Tolerances

Figure A-1. Pickup Impact Tolerance - Particle Analysis

Figure A-2. Small Car Impact Tolerance - Particle Analysis

Figure A-3. Pickup Impact Tolerance - LS-DYNA Analysis

Figure A-4. Small Car Impact Tolerance - LS-DYNA Analysis

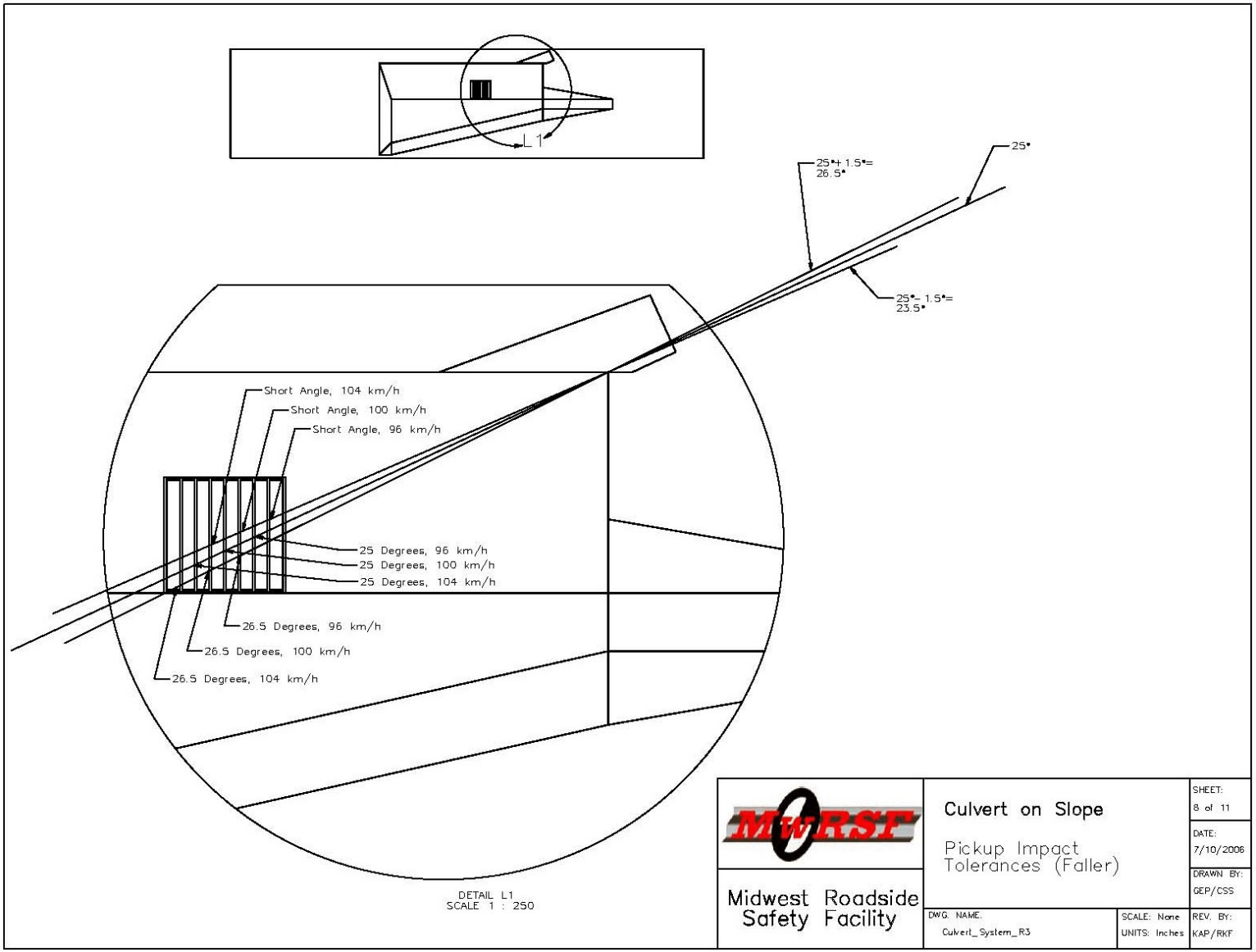

Figure A-1. Pickup Impact Tolerance - Particle Analysis

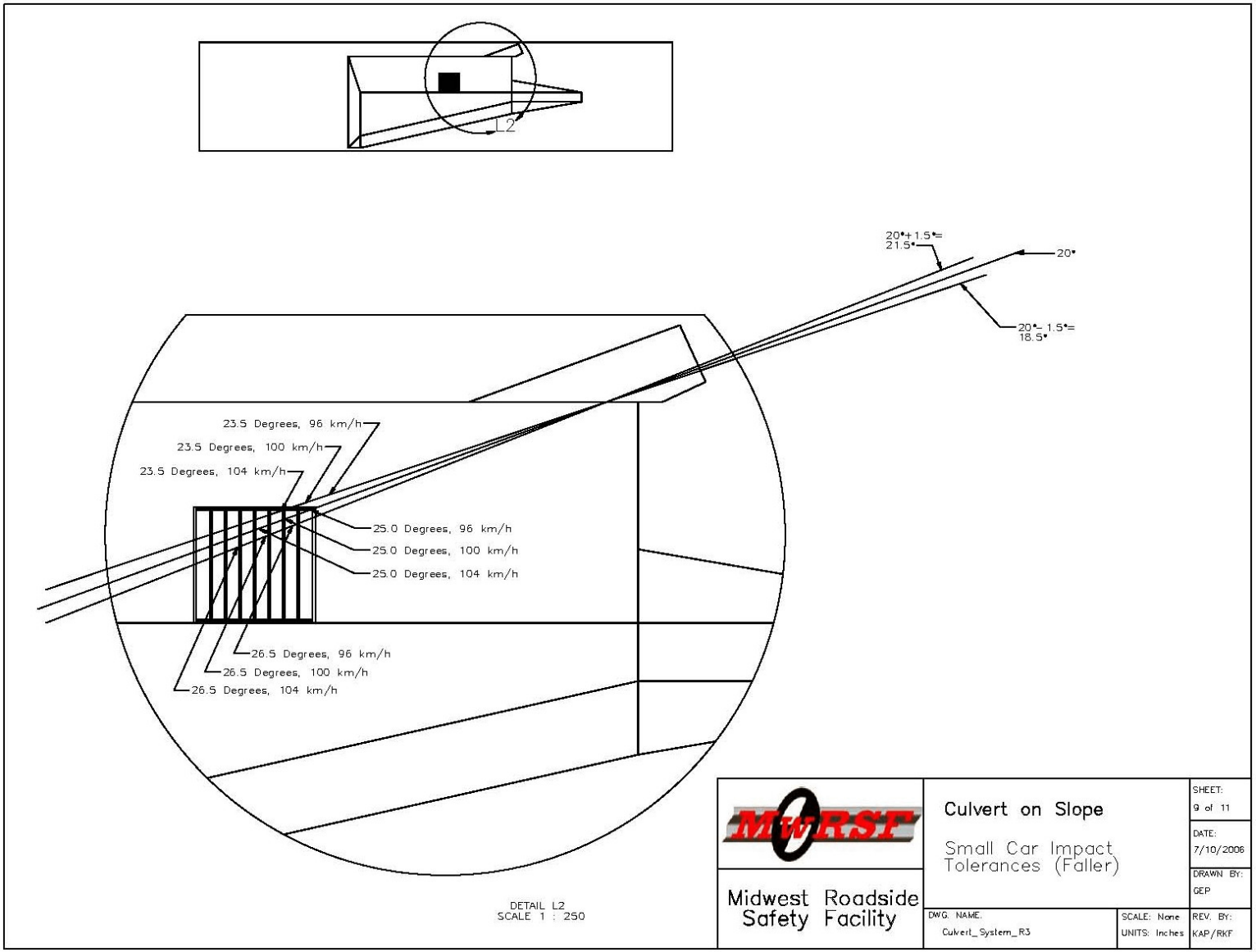

Figure A-2. Small Car Impact Tolerance - Particle Analysis

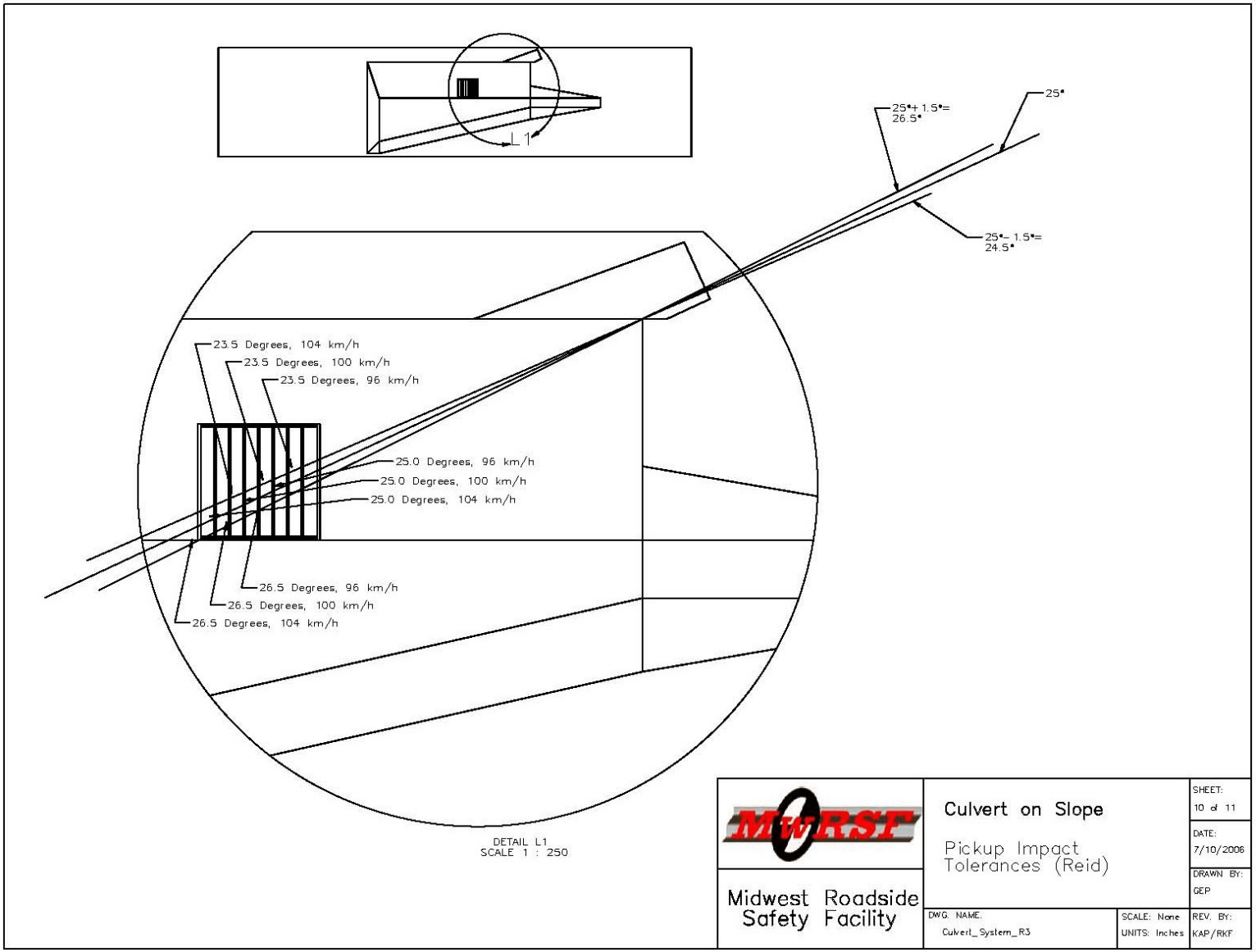

Figure A-3. Pickup Impact Tolerance - LS-DYNA Analysis

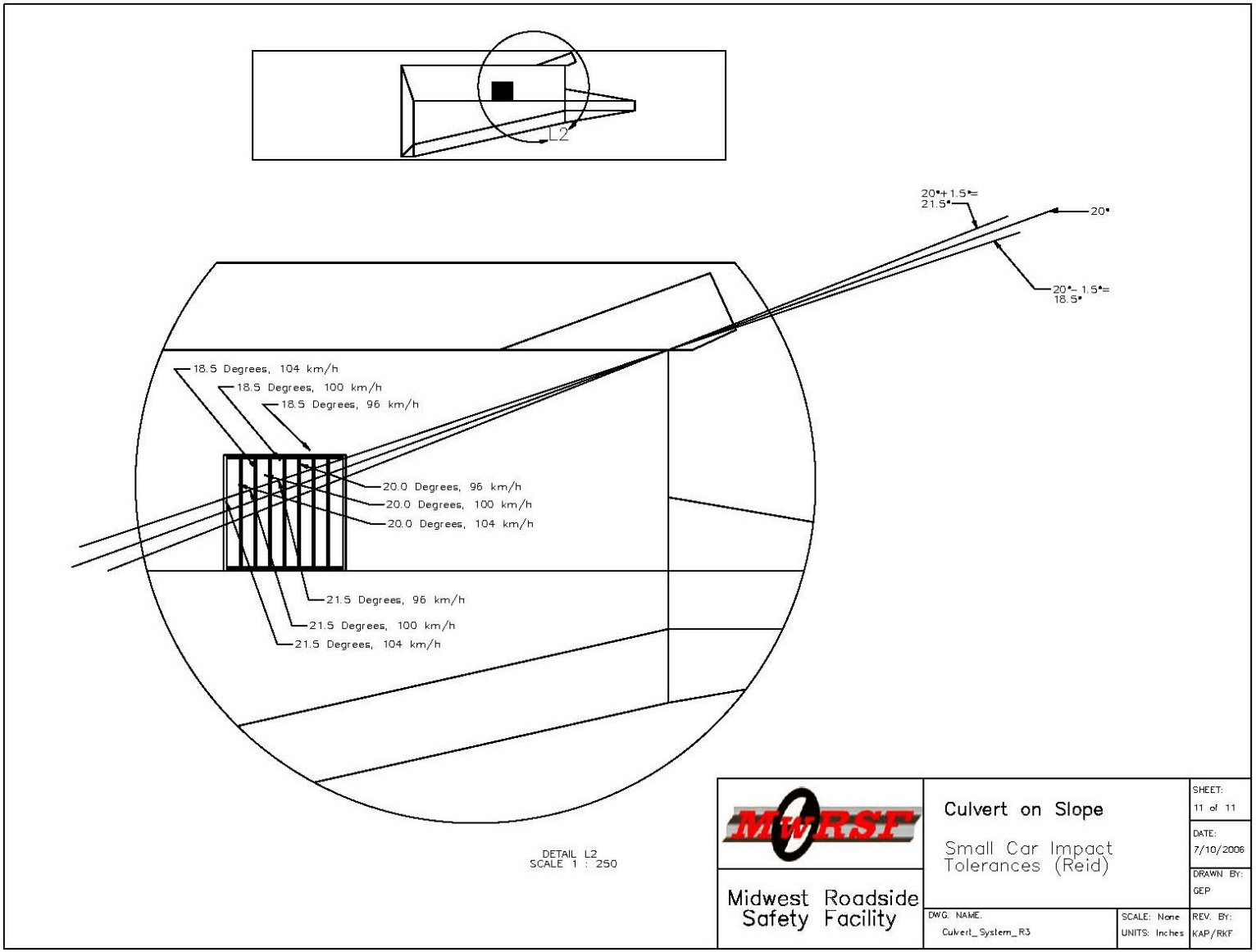

Figure A-4. Small Car Impact Tolerance - LS-DYNA Analysis

APPENDIX B

English-Unit System Drawings

Figure B-1. Culvert Layout (English)

Figure B-2. Culvert Details (English)

Figure B-3. Concrete Wall Details (English)

Figure B-4. Bill of Bars (English)

Figure B-5. Culvert Grate Details (English)

Figure B-6. Culvert Grate Part Details (English)

Figure B-7. Concrete Launch Pad (English)

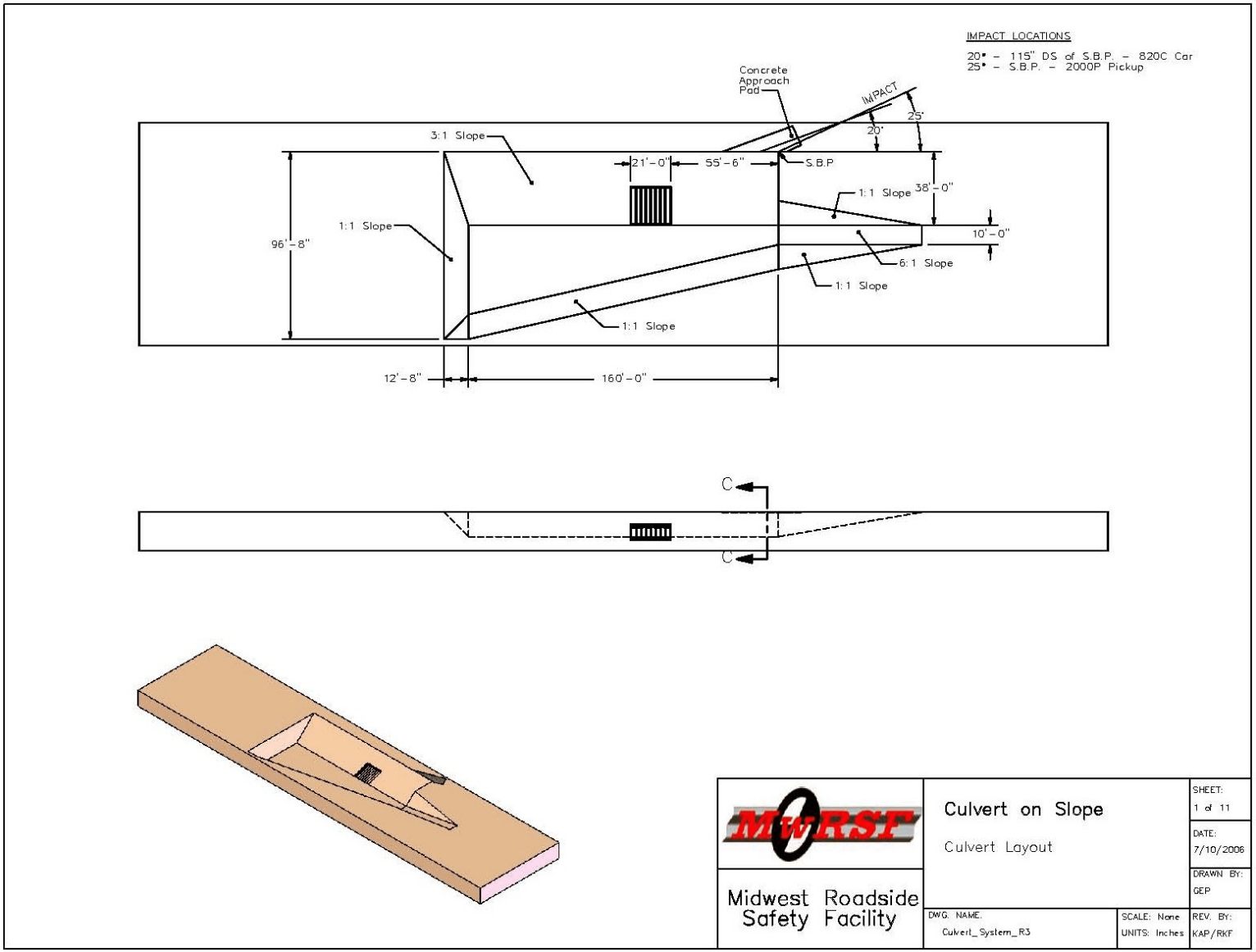

Figure B-1. Culvert Layout (English), Tests KSCG-1 and KSCG-2

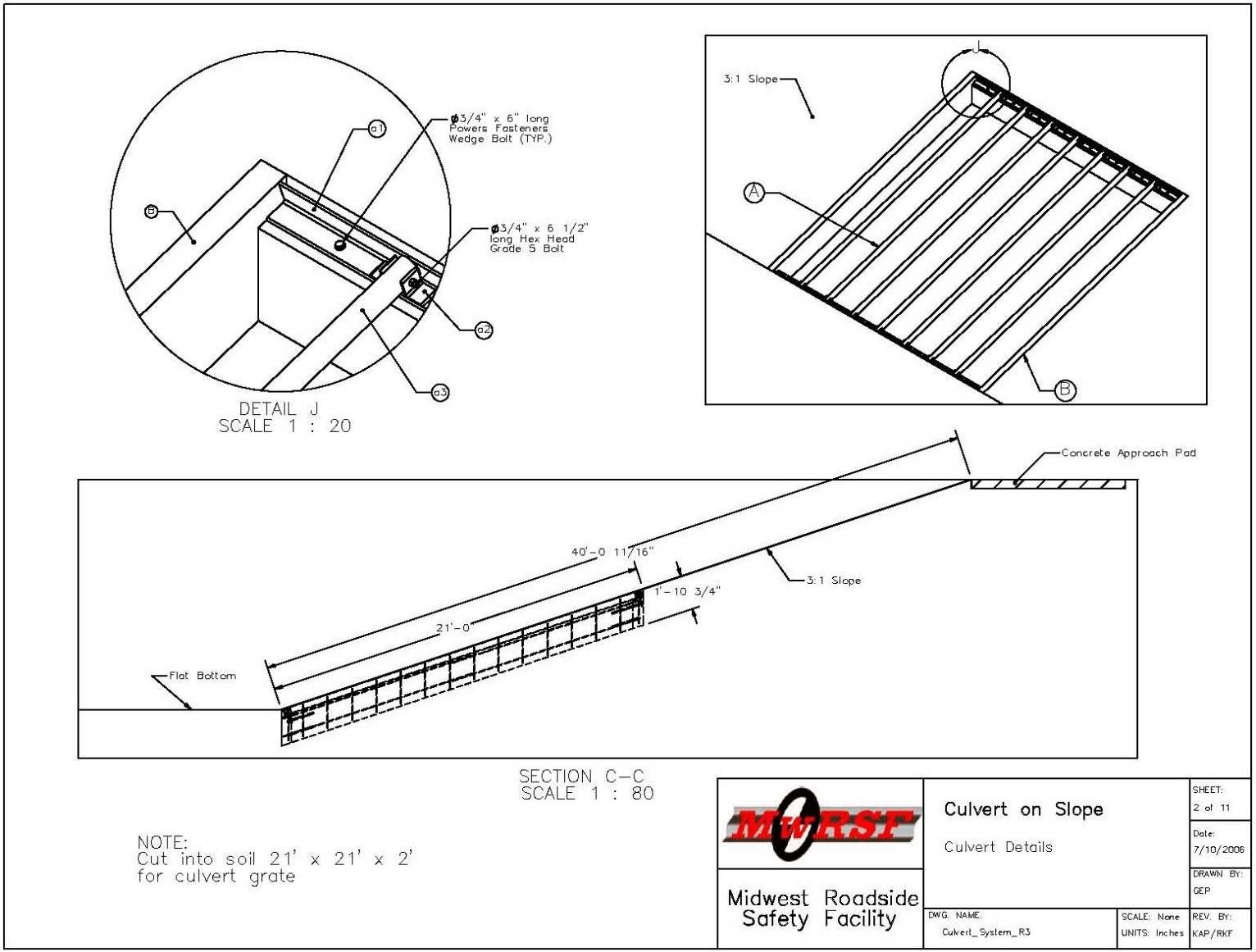

Figure B-2. Culvert Details (English), Tests KSCG-1 and KSCG-2

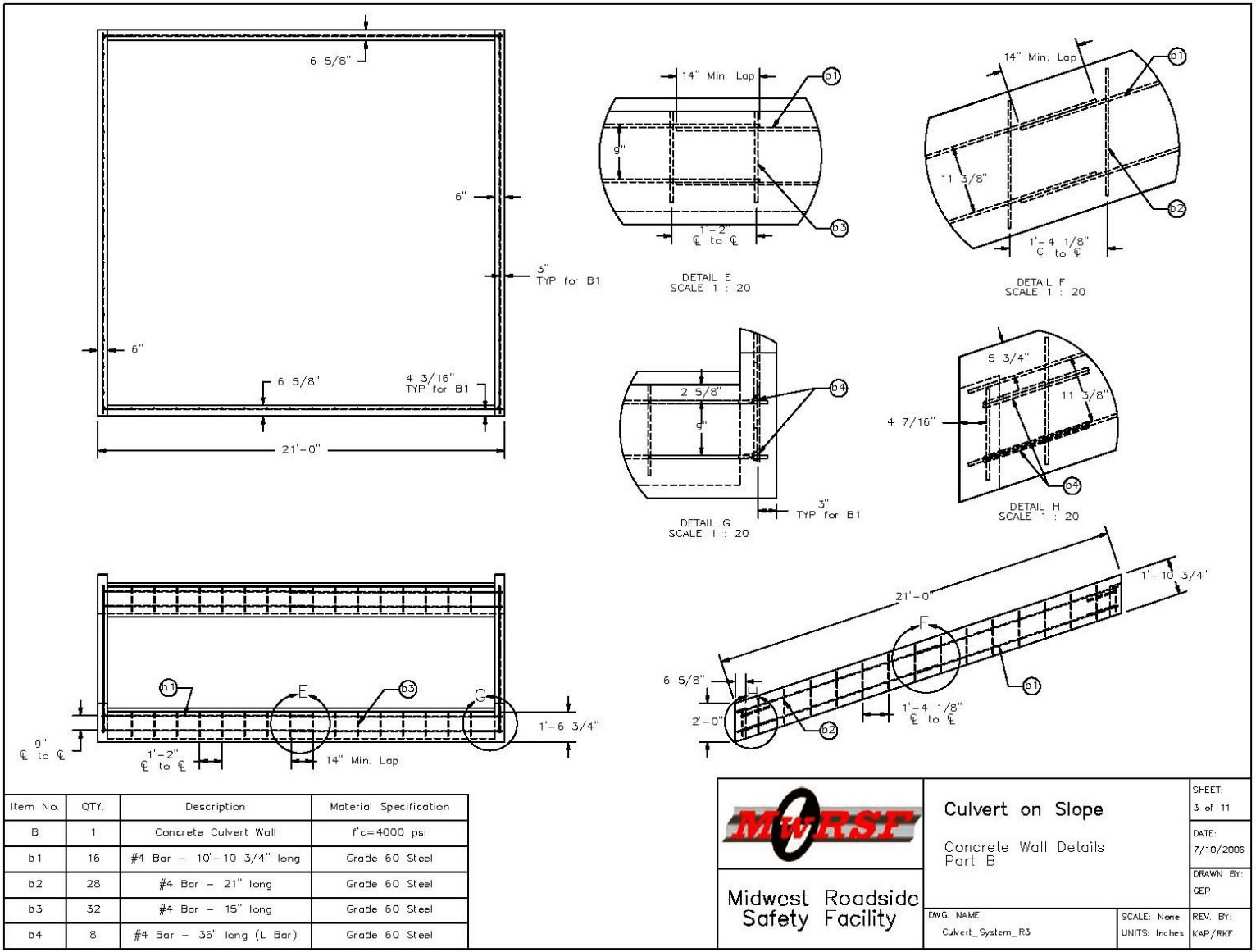

Item No.	QTY.	Description	Material Specification
B	1	Concrete Culvert Wall	f'c=4000 psi
b1	16	#4 Bar – 10'-10 3/4" long	Grade 60 Steel
b2	28	#4 Bar – 21" long	Grade 60 Steel
b3	32	#4 Bar – 15" long	Grade 60 Steel
b4	8	#4 Bar – 36" long (L Bar)	Grade 60 Steel

Figure B-3. Concrete Wall Details (English), Tests KSCG-1 and KSCG-2

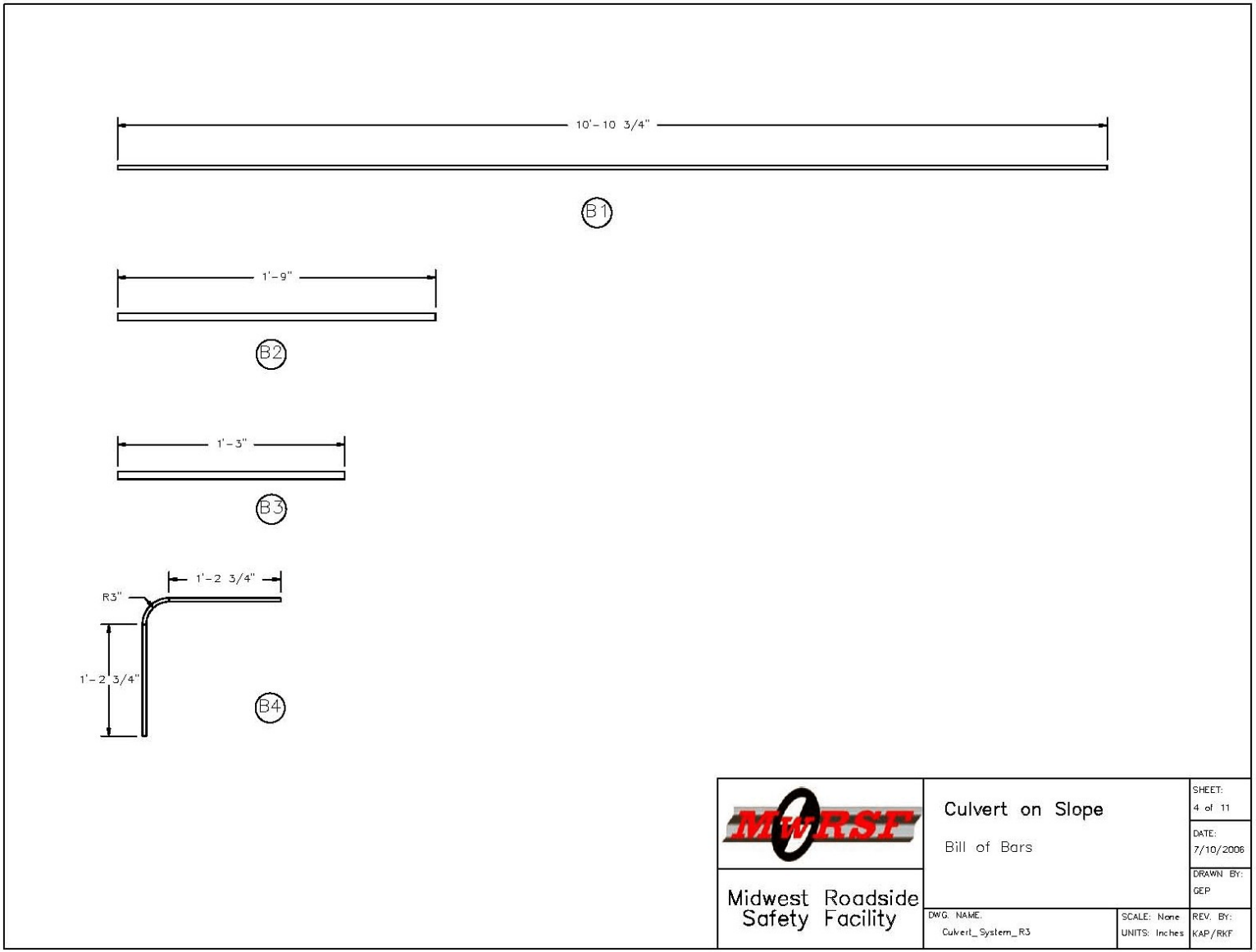

Figure B-4. Bill of Bars (English), Tests KSCG-1 and KSCG-2

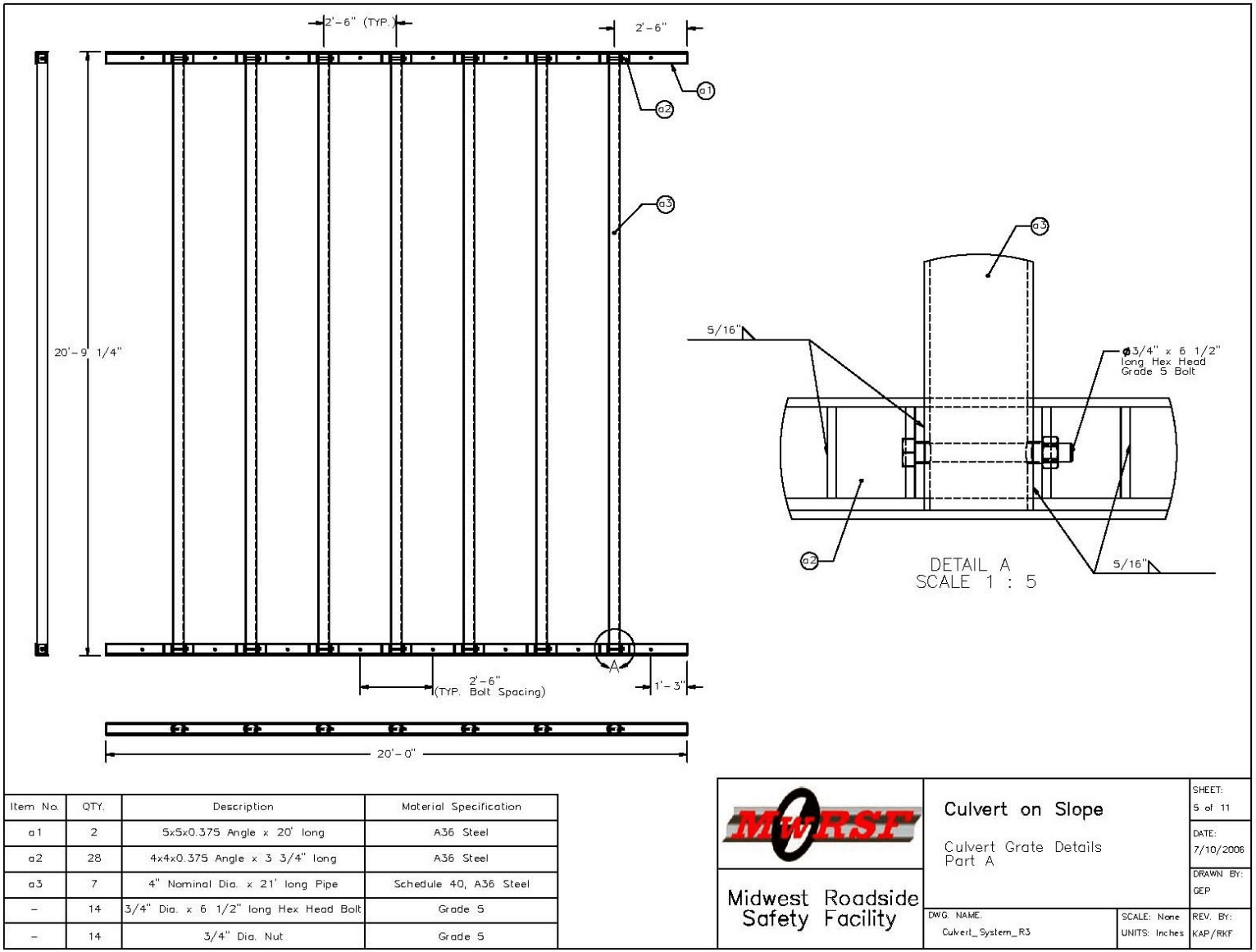

Item No.	QTY.	Description	Material Specification
a1	2	5x5x0.375 Angle x 20' long	A36 Steel
a2	28	4x4x0.375 Angle x 3 3/4" long	A36 Steel
a3	7	4" Nominal Dia. x 21' long Pipe	Schedule 40, A36 Steel
–	14	3/4" Dia. x 6 1/2" long Hex Head Bolt	Grade 5
–	14	3/4" Dia. Nut	Grade 5

Figure B-5. Culvert Grate Details (English), Tests KSCG-1 and KSCG-2

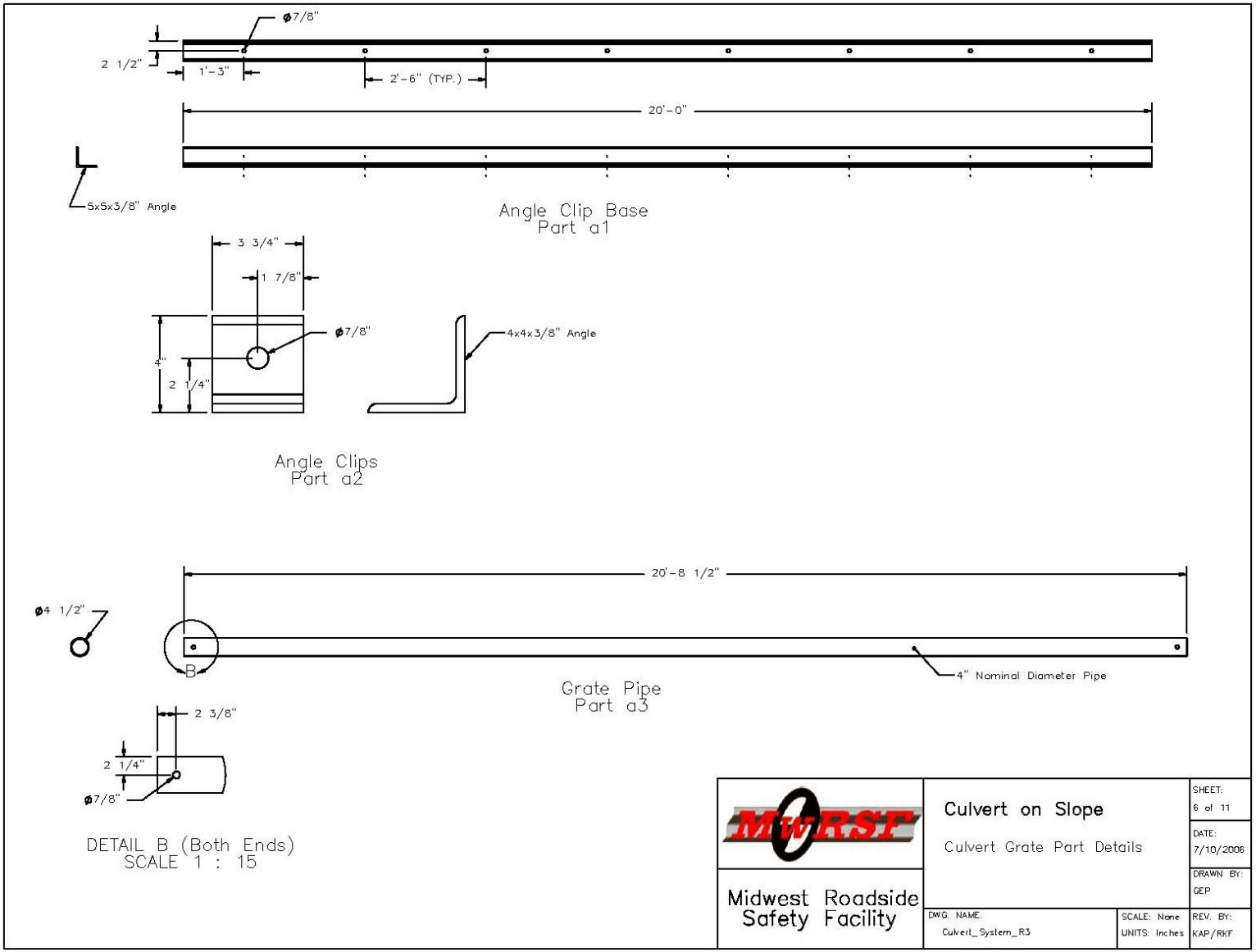

Figure B-6. Culvert Grate Part Details (English), Tests KSCG-1 and KSCG-2

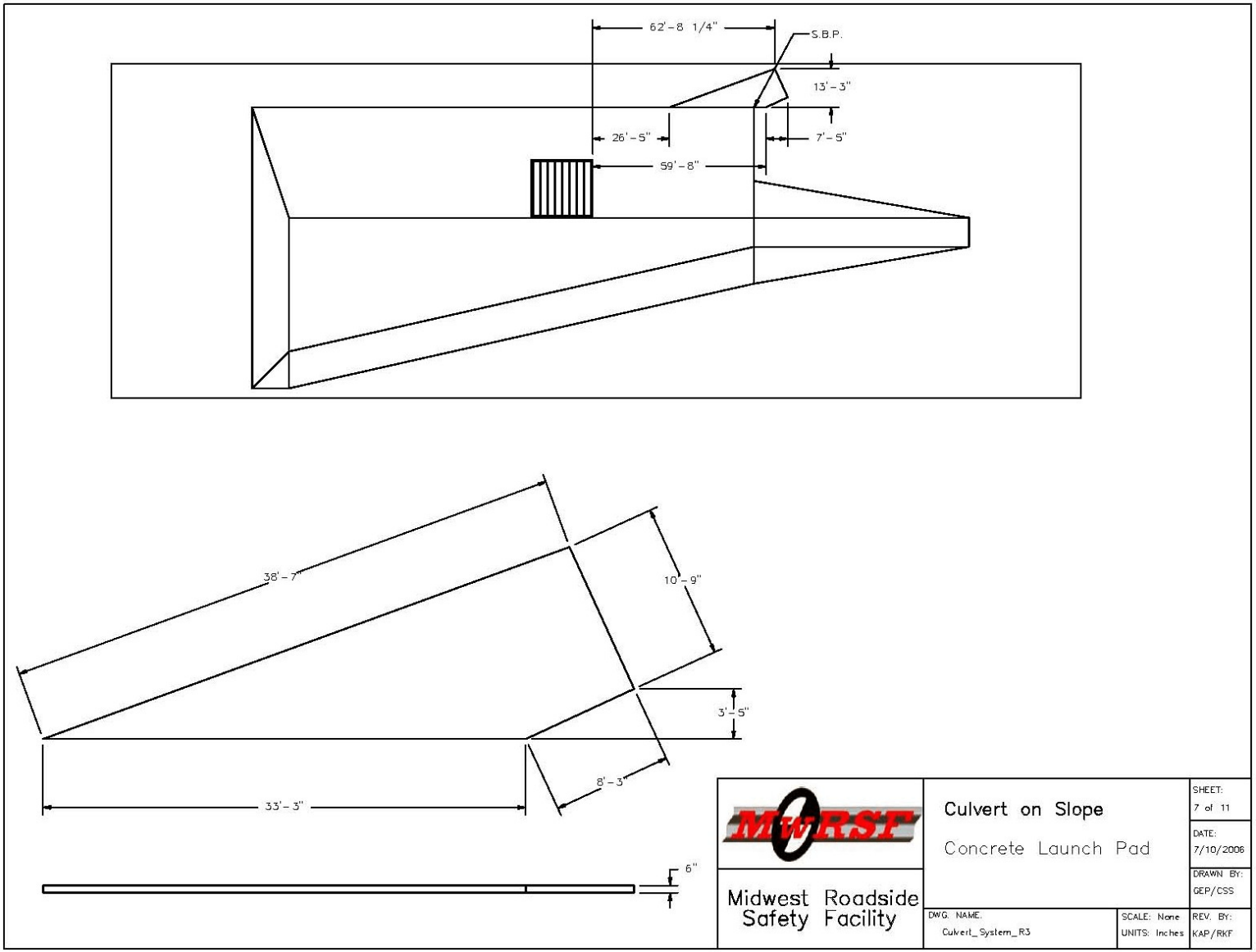

Figure B-7. Concrete Launch Pad (English), Tests KSCG-1 and KSCG-2

APPENDIX C

Test Summary Sheet in English Units

Figure C-1. Summary of the Test Results and Sequential Photographs (English), Test KSCG-1

Figure C-2. Summary of the Test Results and Sequential Photographs (English), Test KSCG-2

0.000 sec | 0.524 sec | 0.752 sec | 0.906 sec | 1.346 sec

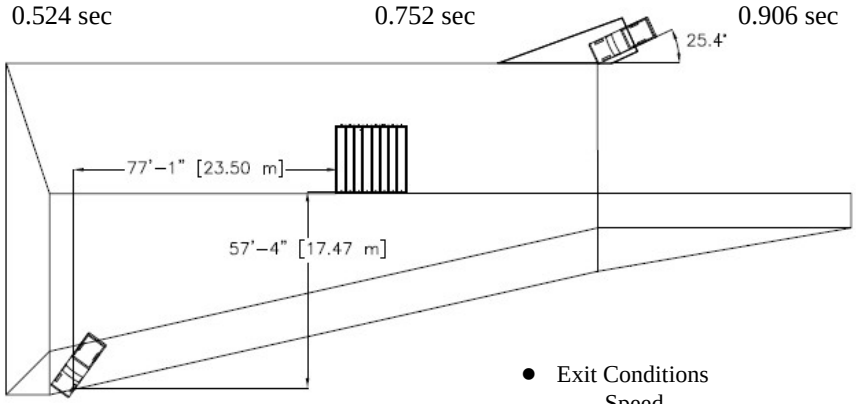

- Test Agency . . . . . MwRSF
- Test Number KSCG-1
- Date 7/20/06
- NCHRP 350 Test Designation 3-11
- Test Article . . . . . Transverse Culvert Safety Grate
- Total Length . . . . . 20 ft
- Total Width . . . . . 20 ft
- Placement . . . . . 19 ft down from 3:1 slope breakpoint
- Key Elements - Grate Piping
  - Type . . . . . Schedule 40 pipe
  - Diameter . . . . . 4 in.
  - Length . . . . . 20 ft
  - Spacing . . . . . 30 in.
- Type of Soil . . . . . NA
- Test Vehicle
  - Type/Designation 2000P
  - Make and Model . . . . . 2000 Chevrolet C2500
  - Curb . . . . . 4,841 lbs
  - Test Inertial . . . . . 4,484 lbs
  - Gross Static . . . . . 4,484 lbs
- Impact Conditions
  - Speed . . . . . 60.8 mph
  - Angle (trajectory) . . . . . 25.4 deg
- Exit Conditions
  - Speed . . . . . 38.2 mph
  - Angle . . . . . 31.0 deg
- Post-Impact Trajectory
  - Vehicle Stability . . . . . Satisfactory
  - Stopping Distance . . . . . 77 ft - 1 in. downstream and 57 ft - 4 in. laterally from lower-downstream corner of culvert
- Occupant Impact Velocity
  - Longitudinal . . . . . 23.47 ft/s < 39.4 ft/s
  - Lateral (not required) . . . . . 3.57 ft/s
- Occupant Ridedown Deceleration (10 msec avg.)
  - Longitudinal . . . . . 4.03 g's < 20 g's
  - Lateral (not required) . . . . . 3.69 g's
- THIV (not required) . . . . . 23.82 ft/s
- PHD (not required) . . . . . 4.92 g's
- Test Article Damage . . . . . Moderate
- Test Article Deflections
  - Permanent Set . . . . . 7.25 in.
  - Dynamic . . . . . NA
  - Working Width . . . . . NA
- Vehicle Damage . . . . . Moderate
  - VDS[10] 1-FC-1
  - CDC[11] 1-RFWE2
  - OCDI F000000000
  - Maximum Deformation . . . . . 0.75 in.

Figure C-1. Summary of Test Results and Sequential Photographs (English), Test KSCG-1

0.000 sec | 0.654 sec | 0.792 sec | 1.174 sec | 1.836 sec

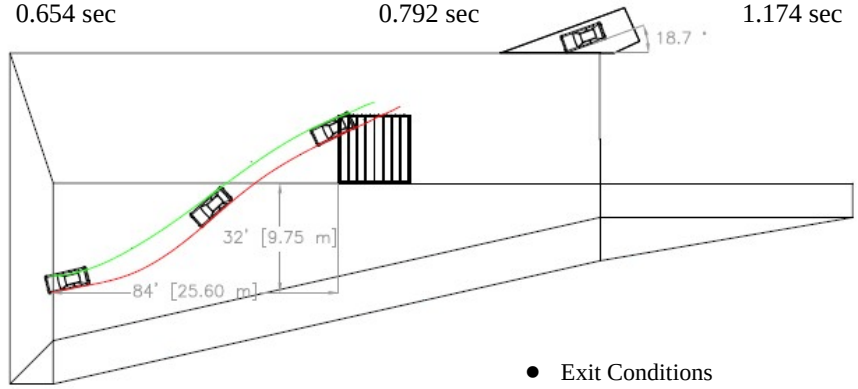

- Test Agency . . . . . MwRSF
- Test Number KSCG-2
- Date 8/23/06
- NCHRP 350 Test Designation 3-10
- Test Article . . . . . Transverse Culvert Safety Grate
- Total Length . . . . . 20 ft
- Total Width . . . . . 20 ft
- Placement . . . . . 19 ft down from the 3:1 slope breakpoint
- Key Elements - Grate Piping
  - Type . . . . . Schedule 40 pipe
  - Diameter . . . . . 4 in.
  - Length . . . . . 20 ft
  - Spacing . . . . . 30 in.
- Type of Soil . . . . . NA
- Test Vehicle
  - Type/Designation 820C
  - Make and Model . . . . . 1999 Chevrolet Metro
  - Curb . . . . . 1,844 lbs
  - Test Inertial . . . . . 1,833 lbs
  - Gross Static . . . . . 1,997 lbs
- Impact Conditions
  - Speed . . . . . 61.3 mph
  - Angle (trajectory) . . . . . 18.7 deg
- Exit Conditions
  - Speed . . . . . NA
  - Angle . . . . . NA
- Post-Impact Trajectory
  - Vehicle Stability . . . . . Satisfactory
  - Stopping Distance . . . . . 54 ft downstream and 32 ft laterally from lower-downstream corner of culvert
- Occupant Impact Velocity
  - Longitudinal . . . . . 12.47 ft/s < 39.4 ft/s
  - Lateral . . . . . 6.65 ft/s < 39.4 ft/s
- Occupant Ridedown Deceleration (10 msec avg.)
  - Longitudinal . . . . . 14.38 g's < 20 g's
  - Lateral . . . . . 3.58 g's < 20 g's
- THIV (not required) . . . . . 14.30 ft/s
- PHD (not required) . . . . . 14.65 g's
- Test Article Damage . . . . . Minimal
- Test Article Deflections
  - Permanent Set . . . . . 0 in.
  - Dynamic . . . . . NA
  - Working Width . . . . . NA
- Vehicle Damage . . . . . Minimal
  - VDS[10] 1-FD-1
  - CDC[11] 1-FDWW1
  - OCDI F000000000
  - Maximum Deformation . . . . . None observed

Figure C-2. Summary of Test Results and Sequential Photographs (English), Test KSCG-2

APPENDIX D

Occupant Compartment Deformation Data

Figure D-1. Occupant Compartment Deformation Data - Set 1, Test KSCG-1

Figure D-2. Occupant Compartment Deformation Data - Set 2, Test KSCG-1

Figure D-3. Occupant Compartment Deformation Index (OCDI), Test KSCG-1

Figure D-4. Occupant Compartment Deformation Index (OCDI), Test KSCG-2

VEHICLE PRE/POST CRUSH INFO
Set-1

TEST: KSCG-1
VEHICLE: 2000 Chevy C2500

Note: If impact is on driver side need to enter negative number for Y

POINT	X	Y	Z	X'	Y'	Z'	DEL X	DEL Y	DEL Z
1	56.5	10.5	0.75	56.75	11	0.75	0.25	0.5	0
2	58.25	15.75	1.5	58.25	16.5	1.75	0	0.75	0.25
3	58.5	22	2	58.5	22.25	1.75	0	0.25	-0.25
4	57.5	27.5	0.75	57.5	27.75	0.75	0	0.25	0
5	48	6.25	1	48	6.25	1	0	0	0
6	49.25	10.75	6.75	49.25	11	6.5	0	0.25	-0.25
7	49.25	16.75	7	49.25	17.25	6.75	0	0.5	-0.25
8	49	22.75	7	49.25	23	6.75	0.25	0.25	-0.25
9	49	29.5	7	49	29	6.75	0	-0.5	-0.25
10	42.25	6	2	42	6.25	1.75	-0.25	0.25	-0.25
11	42.5	10.75	6.75	42.5	10.5	6.75	0	-0.25	0
12	42.5	16	7.5	42.5	16	7.25	0	0	-0.25
13	42.25	22.25	7.5	42.25	22.25	7	0	0	-0.5
14	41.75	28.5	7.75	42	28.5	7.5	0.25	0	-0.25
15	36.5	6	2.75	36.5	6	2.75	0	0	0
16	37.25	10	6.75	37	9.75	6.5	-0.25	-0.25	-0.25
17	37	15	7.5	36.75	14.75	7.25	-0.25	-0.25	-0.25
18	36.5	21.5	7.5	36.5	21.5	7.25	0	0	-0.25
19	35.75	28	8	35.75	27.5	7.75	0	-0.5	-0.25
20	28.5	5.75	3.75	28.5	5.75	3.5	0	0	-0.25
21	29.25	9.75	7.5	29.25	9.5	7.25	0	-0.25	-0.25
22	29.25	14.5	8.25	29	14.25	8	-0.25	-0.25	-0.25
23	28.75	20	8	29	19.5	8	0.25	-0.5	0
24	29	27.25	7.5	29	26.75	7.5	0	-0.5	0
25	23	5.5	4.5	23	5.25	4.25	0	-0.25	-0.25
26	23.25	12.25	8.5	23.25	11.75	8.25	0	-0.5	-0.25
27	23.25	18.75	8.25	23.25	18.5	8	0	-0.25	-0.25
28	22.5	25.5	7.5	22.5	25.25	7.25	0	-0.25	-0.25
29	54.75	-28.75	2.25	54.5	-28.5	2.25	-0.25	0.25	0
30	51.25	-5	0	51	-5	0	-0.25	0	0
31	44.5	-27.25	5.75	44.25	-27	5.5	-0.25	0.25	-0.25
32	45.75	-17.5	6.25	45.5	-17.25	6.25	-0.25	0.25	0
33	43.5	-4.5	1.25	43.25	-4.5	1.25	-0.25	0	0
34	36.5	-24.5	6	36.5	-24.25	6	0	0.25	0
35	37.75	-14	7.25	37.5	-13.75	7.25	-0.25	0.25	0

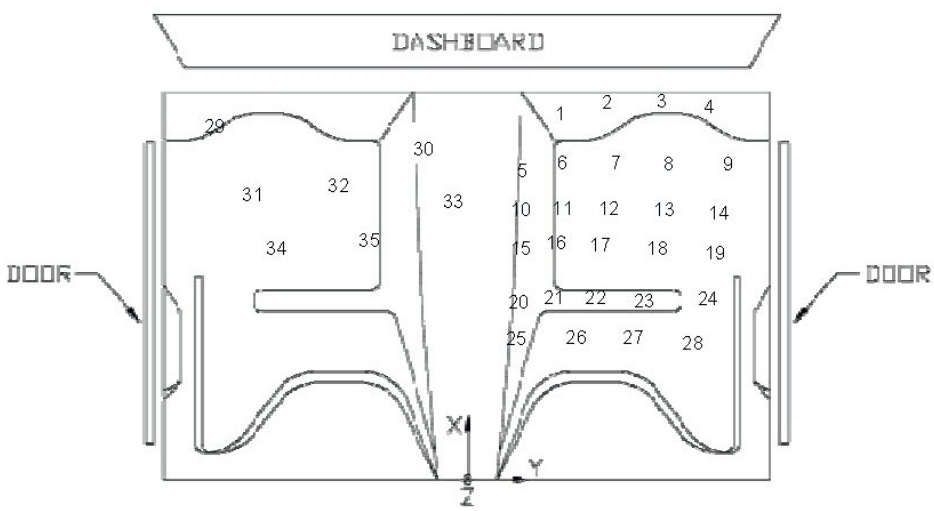

Figure D-1. Occupant Compartment Deformation Data - Set 1, Test KSCG-1

VEHICLE PRE/POST CRUSH INFO
Set-2

TEST: KSCG-1
VEHICLE: 2000 Chevy C2500

Note: If impact is on driver side need to enter negative number for Y

POINT	X	Y	Z	X'	Y'	Z'	DEL X	DEL Y	DEL Z
1	50	19.25	0.25	50.25	19.75	0.25	0.25	0.5	0
2	51.75	24.5	0.75	51.75	25.25	0.75	0	0.75	0
3	52	30.75	1	52	31	1	0	0.25	0
4	51	36.25	0	51	36.5	0	0	0.25	0
5	41.5	15	0.5	41.5	15	0.25	0	0	-0.25
6	42.75	19.5	6	42.75	19.75	6	0	0.25	0
7	42.75	25.5	6.25	42.75	26	6.25	0	0.5	0
8	42.5	31.5	6	42.75	31.75	6	0.25	0.25	0
9	42.5	38.25	6	42.5	37.75	6	0	-0.5	0
10	35.75	14.75	1.25	35.5	15	1.25	0	0.25	0
11	36	19.5	6	36	19.25	6	0	-0.25	0
12	36	24.75	6.5	36	24.75	6.5	0	0	0
13	35.75	31	6.25	35.75	31	6.25	0	0	0
14	35.25	37.25	6.75	35.5	37.25	6.75	0.25	0	0
15	30	14.75	2	30	14.75	2	0	0	0
16	30.75	18.75	5.75	30.5	18.5	5.75	-0.25	-0.25	0
17	30.5	23.75	6.5	30.25	23.5	6.5	-0.25	-0.25	0
18	30	30.25	6.25	30	30.25	6.25	0	0	0
19	29.25	36.75	6.75	29.25	36.25	6.75	0	-0.5	0
20	22	14.5	2.75	22	14.5	2.75	0	0	0
21	22.75	18.5	6.5	22.75	18.25	6.5	0	-0.25	0
22	22.75	23.25	7	22.5	23	7	-0.25	-0.25	0
23	22.25	28.75	6.75	22.5	28.25	7	0.25	-0.5	0.25
24	22.5	36	6.25	22.5	35.5	6.5	0	-0.5	0.25
25	16.5	14.25	3.5	16.5	14	3.5	0	-0.25	0
26	16.75	21	7	16.75	20.5	7.25	0	-0.5	0.25
27	16.75	27.5	6.75	16.75	27.25	7	0	-0.25	0.25
28	16	34.25	6	16	34	6	0	-0.25	0
29	48.25	-20	2.25	48	-19.75	2.5	-0.25	0.25	0.25
30	44.75	3.75	0	44.5	3.75	0	-0.25	0	0
31	38	-18.5	5.5	37.75	-18.25	5.75	-0.25	0.25	0.25
32	39.25	-8.75	6	39	-8.5	6.25	-0.25	0.25	0.25
33	37	4.25	1.25	36.75	4.25	1.25	-0.25	0	0
34	30	-15.75	6	30	-15.5	6.25	0	0.25	0.25
35	31.25	-5.25	7	31	-5	7.5	-0.25	0.25	0.5

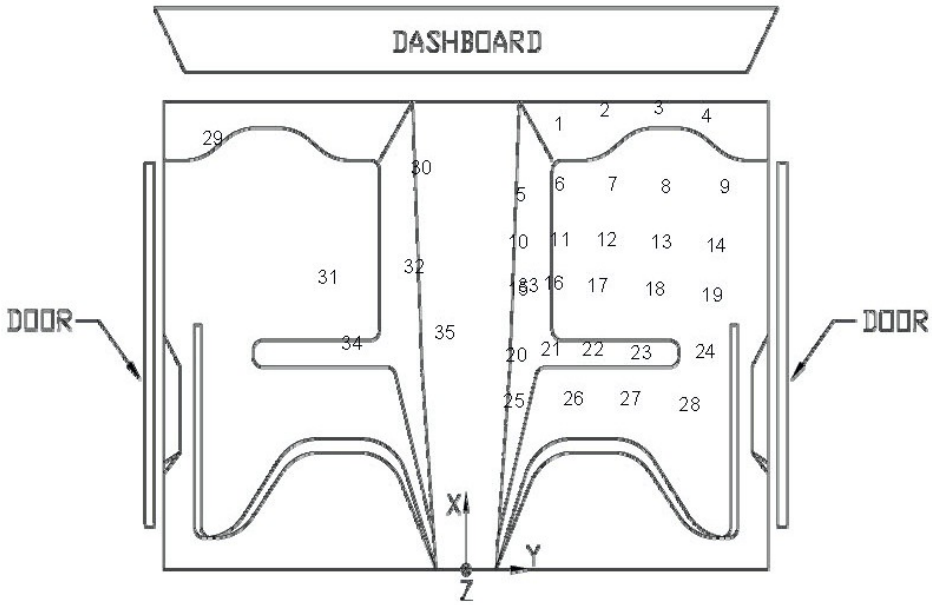

Figure D-2. Occupant Compartment Deformation Data - Set 2, Test KSCG-1

Occupant Compartment Deformation Index (OCDI)

Test No. KSCG-1
Vehicle Type: 2000 Chevy C2500

OCDI = XXABCDEFGHI

XX = location of occupant compartment deformation

A= distance between the dashboard and a reference point at the rear of the occupant compartment, such as the top of the rear seat or the rear of the cab on a pickup

B = distance between the roof and the floor panel

C = distance between a reference point at the rear of the occupant compartment and the motor panel

D = distance between the lower dashboard and the floor panel

E = interior width

F = distance between the lower edge of right window and the upper edge of left window

G = distance between the lower edge of left window and the upper edge of right window

H= distance between bottom front corner and top rear corner of the passenger side window

I= distance between bottom front corner and top rear corner of the driver side window

Severity Indices

0 - if the reduction is less than 3%
1 - if the reduction is greater than 3% and less than or equal to 10 %
2 - if the reduction is greater than 10% and less than or equal to 20 %
3 - if the reduction is greater than 20% and less than or equal to 30 %
4 - if the reduction is greater than 30% and less than or equal to 40 %

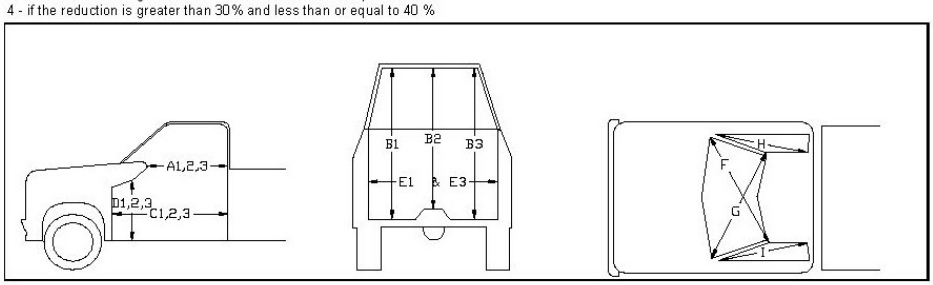

where,
1 = Passenger Side
2 = Middle
3 = Driver Side

Location:

Measurement	Pre-Test (in.)	Post-Test (in.)	Change (in.)	% Difference	Severity Index
A1	39.25	39.00	-0.25	-0.64	0
A2	39.25	39.00	-0.25	-0.64	0
A3	39.25	39.50	0.25	0.64	0
B1	45.25	45.25	0.00	0.00	0
B2	42.25	42.25	0.00	0.00	0
B3	46.50	46.75	0.25	0.54	0
C1	58.50	57.50	-1.00	-1.71	0
C2	54.25	54.25	0.00	0.00	0
C3	59.50	58.75	-0.75	-1.26	0
D1	16.25	16.25	0.00	0.00	0
D2	10.00	9.75	-0.25	-2.50	0
D3	16.00	15.75	-0.25	-1.56	0
E1	62.50	62.25	-0.25	-0.40	0
E3	64.00	64.00	0.00	0.00	0
F	56.75	56.75	0.00	0.00	0
G	57.50	57.50	0.00	0.00	0
H	39.75	39.75	0.00	0.00	0
I	42.00	42.00	0.00	0.00	0

Note: Maximum sevrity index for each variable (A-I) is used for determination of final OCDI value

XX A B C D E F G H I
Final OCDI: F 0 0 0 0 0 0 0 0 0

Figure D-3. Occupant Compartment Deformation Index (OCDI), Test KSCG-1

Occupant Compartment Deformation Index (OCDI)

Test No. KSCG-2
Vehicle Type: 1998 chevy metro 2dr

OCDI = XXABCDEFGHI

XX = location of occupant compartment deformation

A = distance between the dashboard and a reference point at the rear of the occupant compartment, such as the top of the rear seat or the rear of the cab on a pickup

B = distance between the roof and the floor panel

C = distance between a reference point at the rear of the occupant compartment and the motor panel

D = distance between the lower dashboard and the floor panel

E = interior width

F = distance between the lower edge of right window and the upper edge of left window

G = distance between the lower edge of left window and the upper edge of right window

H= distance between bottom front corner and top rear corner of the passenger side window

I= distance between bottom front corner and top rear corner of the driver side window

Severity Indices

0 - if the reduction is less than 3%
1 - if the reduction is greater than 3% and less than or equal to 10 %
2 - if the reduction is greater than 10% and less than or equal to 20 %
3 - if the reduction is greater than 20% and less than or equal to 30 %
4 - if the reduction is greater than 30% and less than or equal to 40 %

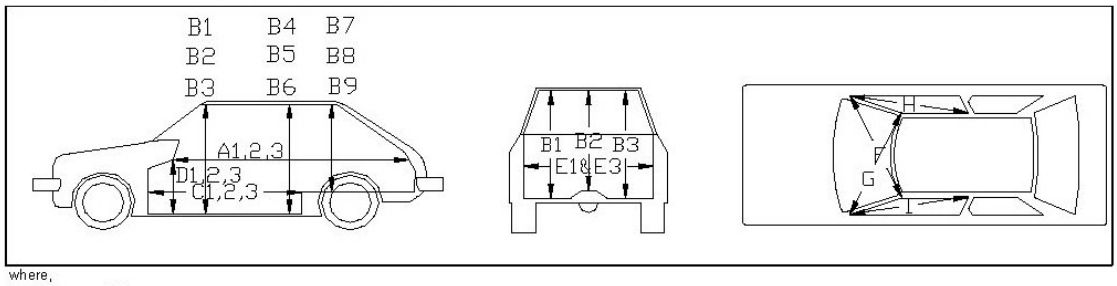

where,
1 = Passenger Side
2 = Middle
3 = Driver Side

Location:

Measurement	Pre-Test (in.)	Post-Test (in.)	Change (in.)	% Difference	Severity Index
A1	44.75	44.75	0.00	0.00	0
A2	44.50	44.25	-0.25	-0.56	0
A3	44.75	44.75	0.00	0.00	0
B1	40.25	40.25	0.00	0.00	0
B2	38.25	37.75	-0.50	-1.31	0
B3	40.25	40.25	0.00	0.00	0
C1	55.75	55.50	-0.25	-0.45	0
C2	61.00	60.50	-0.50	-0.82	0
C3	55.00	55.00	0.00	0.00	0
D1	18.50	18.50	0.00	0.00	0
D2	13.25	13.25	0.00	0.00	0
D3	13.00	13.00	0.00	0.00	0
E1	49.00	49.25	0.25	0.51	0
E3	49.50	49.50	0.00	0.00	0
F	48.00	48.00	0.00	0.00	0
G	48.25	48.25	0.00	0.00	0
H	39.50	39.75	0.25	0.63	0
I	39.75	40.00	0.25	0.63	0

Note: Maximum sevrity index for each variable (A-I) is used for determination of final OCDI value

XX A B C D E F G H I
Final OCDI: F 0 0 0 0 0 0 0 0 0 0

Figure D-4. Occupant Compartment Deformation Index (OCDI), Test KSCG-2

APPENDIX E

Accelerometer and Rate Transducer Data Analysis, Test KSCG-1

Figure E-1. Graph of Longitudinal Deceleration, Test KSCG-1

Figure E-2. Graph of Longitudinal Occupant Impact Velocity, Test KSCG-1

Figure E-3. Graph of Longitudinal Occupant Displacement, Test KSCG-1

Figure E-4. Graph of Lateral Deceleration, Test KSCG-1

Figure E-5. Graph of Lateral Occupant Impact Velocity, Test KSCG-1

Figure E-6. Graph of Lateral Occupant Displacement, Test KSCG-1

Figure E-7. Graph of Roll, Pitch, and Yaw Angular Displacements, Test KSCG-1

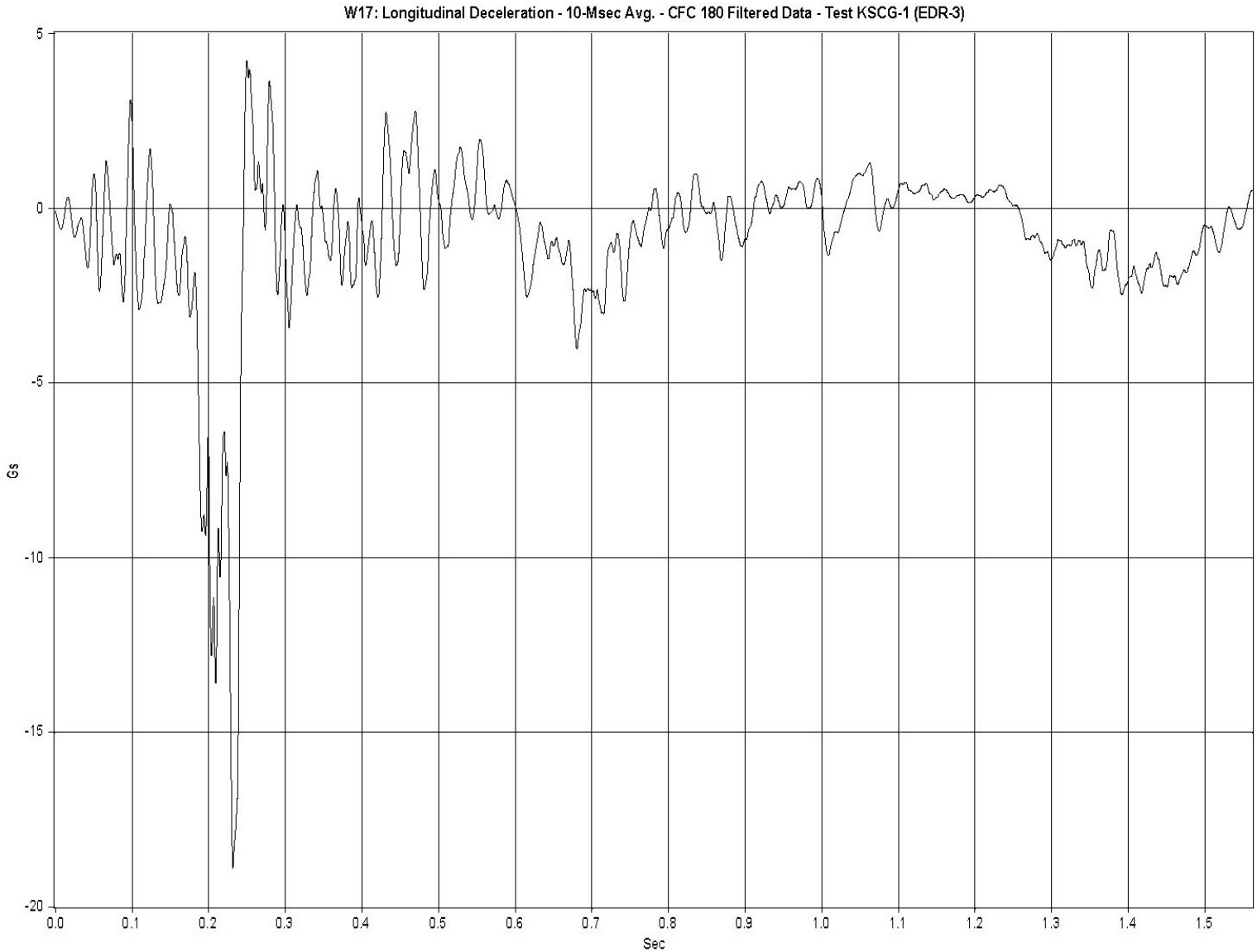

Figure E-1. Graph of Longitudinal Deceleration, Test KSCG-1

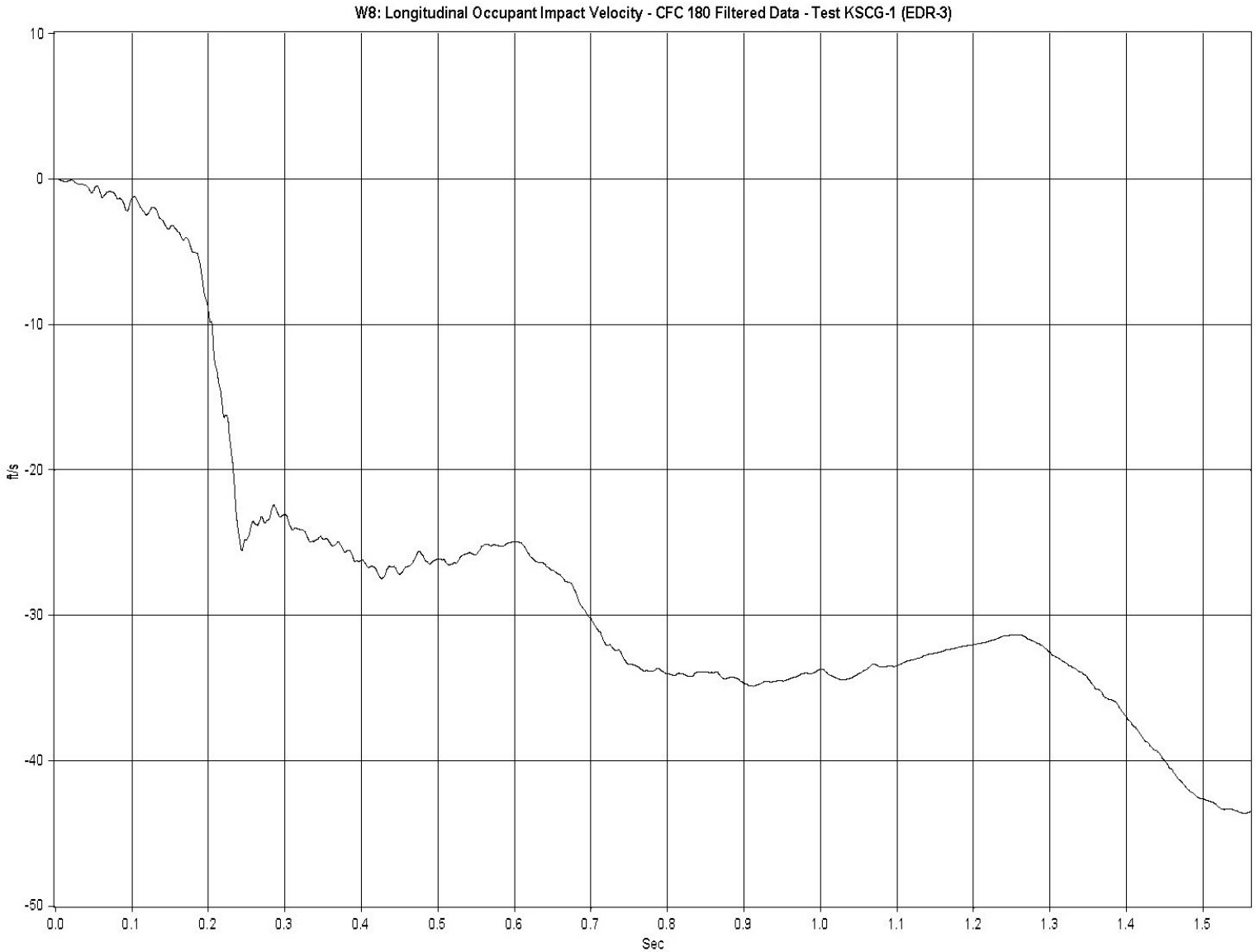

Figure E-2. Graph of Longitudinal Occupant Impact Velocity, Test KSCG-1

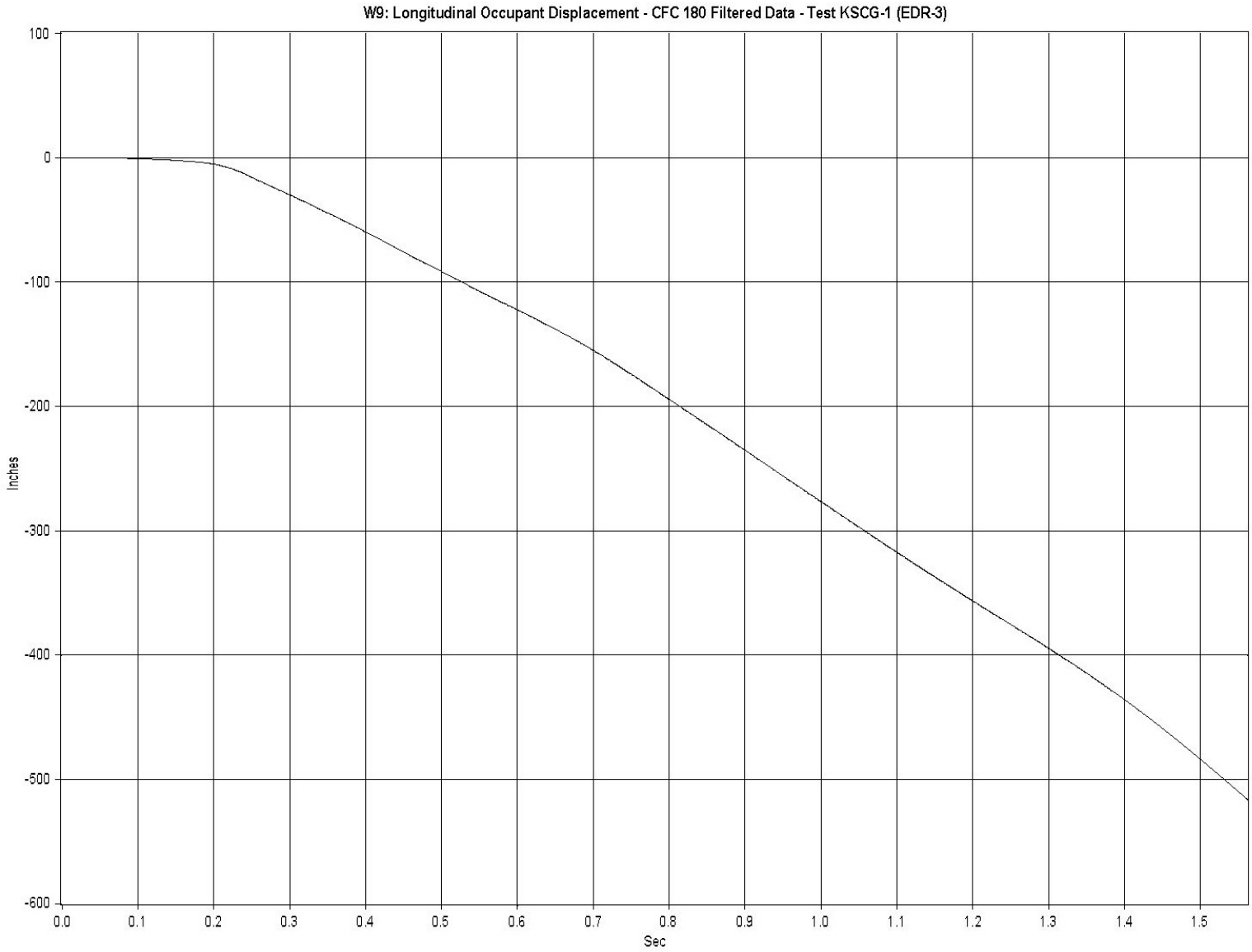

Figure E-3. Graph of Longitudinal Occupant Displacement, Test KSCG-1

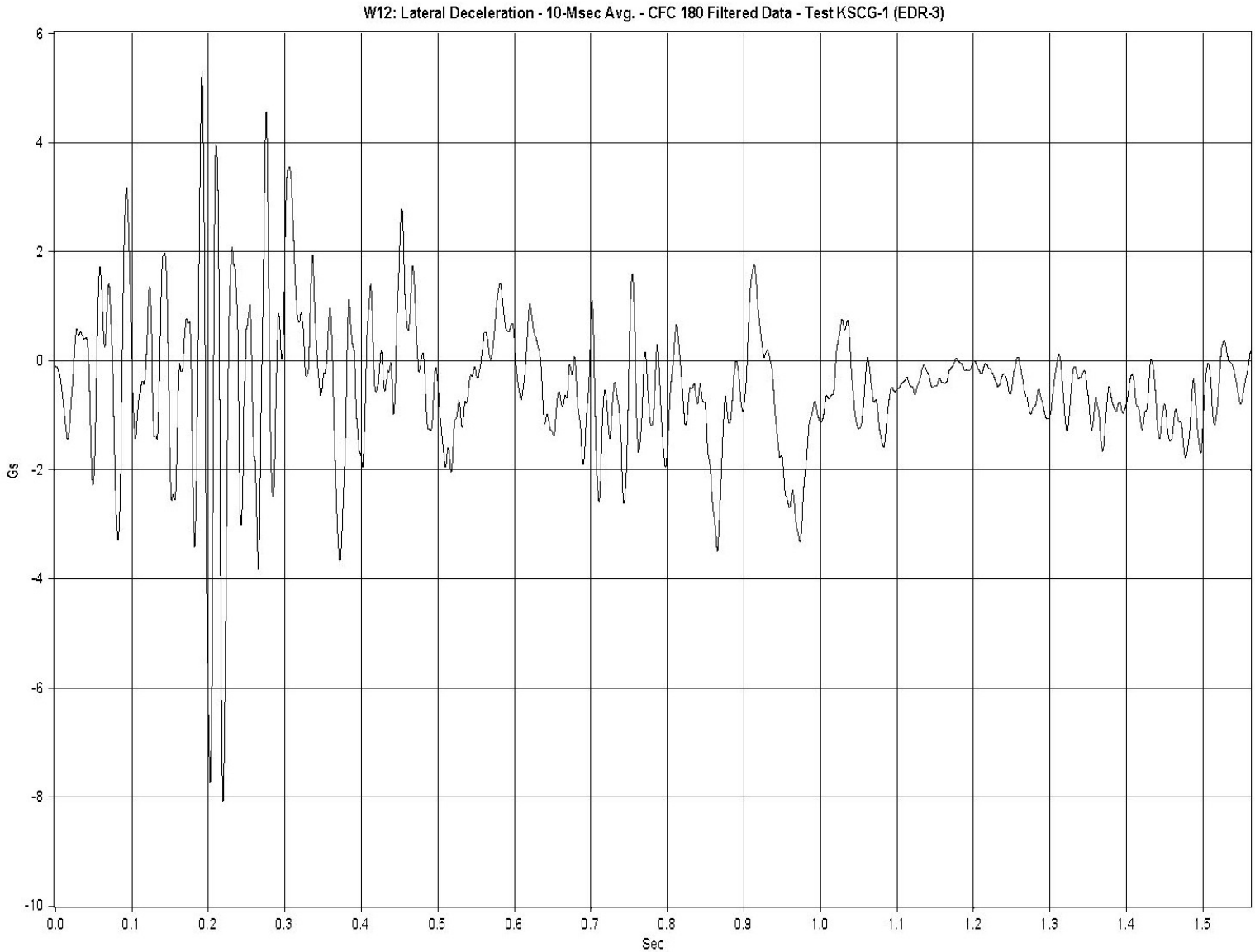

Figure E-4. Graph of Lateral Deceleration, Test KSCG-1

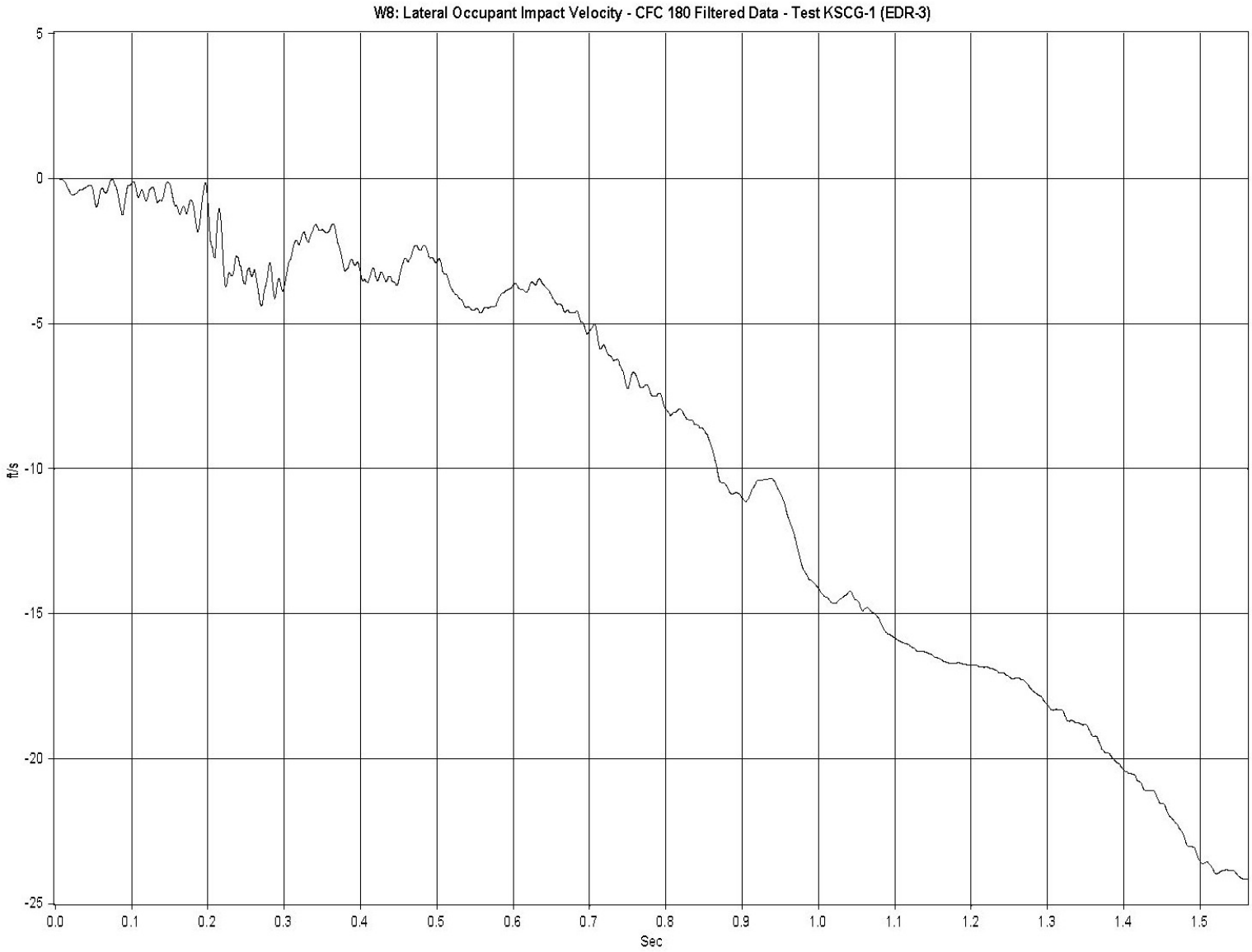

Figure E-5. Graph of Lateral Occupant Impact Velocity, Test KSCG-1

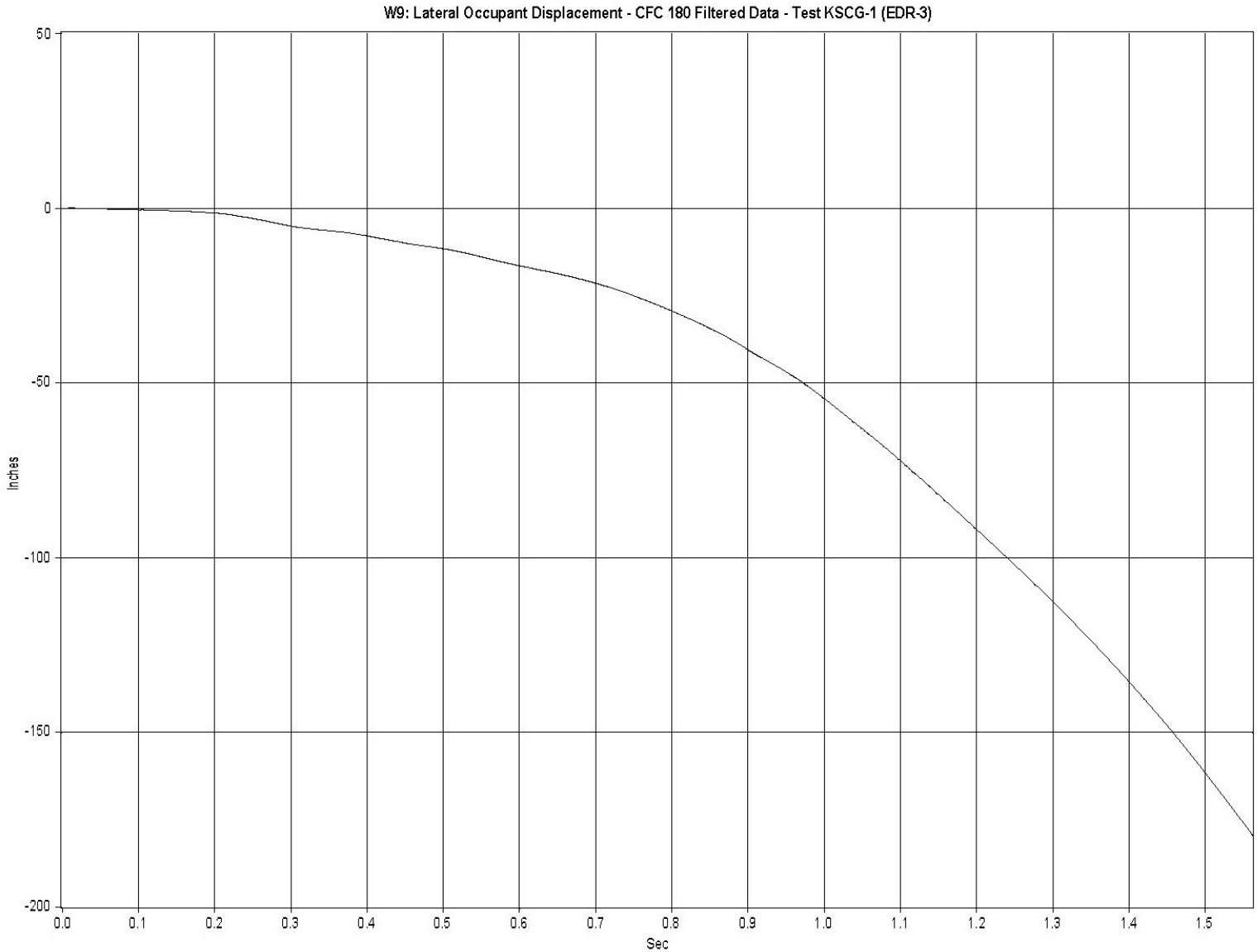

Figure E-6. Graph of Lateral Occupant Displacement, Test KSCG-1

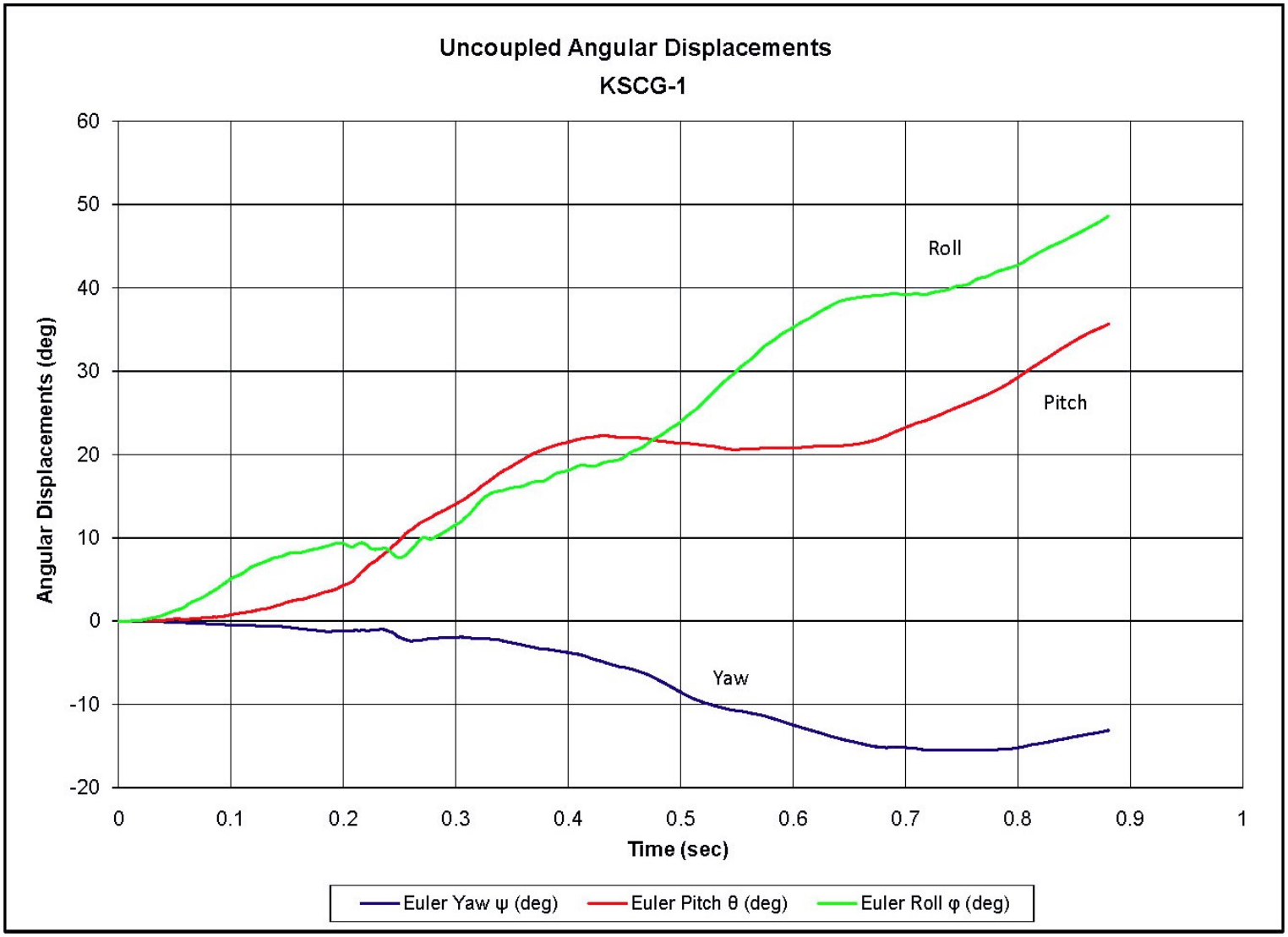

Figure E-7. Graph of Roll, Pitch, and Yaw Angular Displacements, Test KSCG-1 (Note: Time zero is impact with the culvert grate)

APPENDIX F

Accelerometer and Rate Transducer Data Analysis, Test KSCG-2

Figure F-1. Graph of Longitudinal Deceleration, Test KSCG-2

Figure F-2. Graph of Longitudinal Occupant Impact Velocity, Test KSCG-2

Figure F-3. Graph of Longitudinal Occupant Displacement, Test KSCG-2

Figure F-4. Graph of Lateral Deceleration, Test KSCG-2

Figure F-5. Graph of Lateral Occupant Impact Velocity, Test KSCG-2

Figure F-6. Graph of Lateral Occupant Displacement, Test KSCG-2

Figure F-7. Graph of Roll, Pitch, and Yaw Angular Displacements, Test KSCG-2

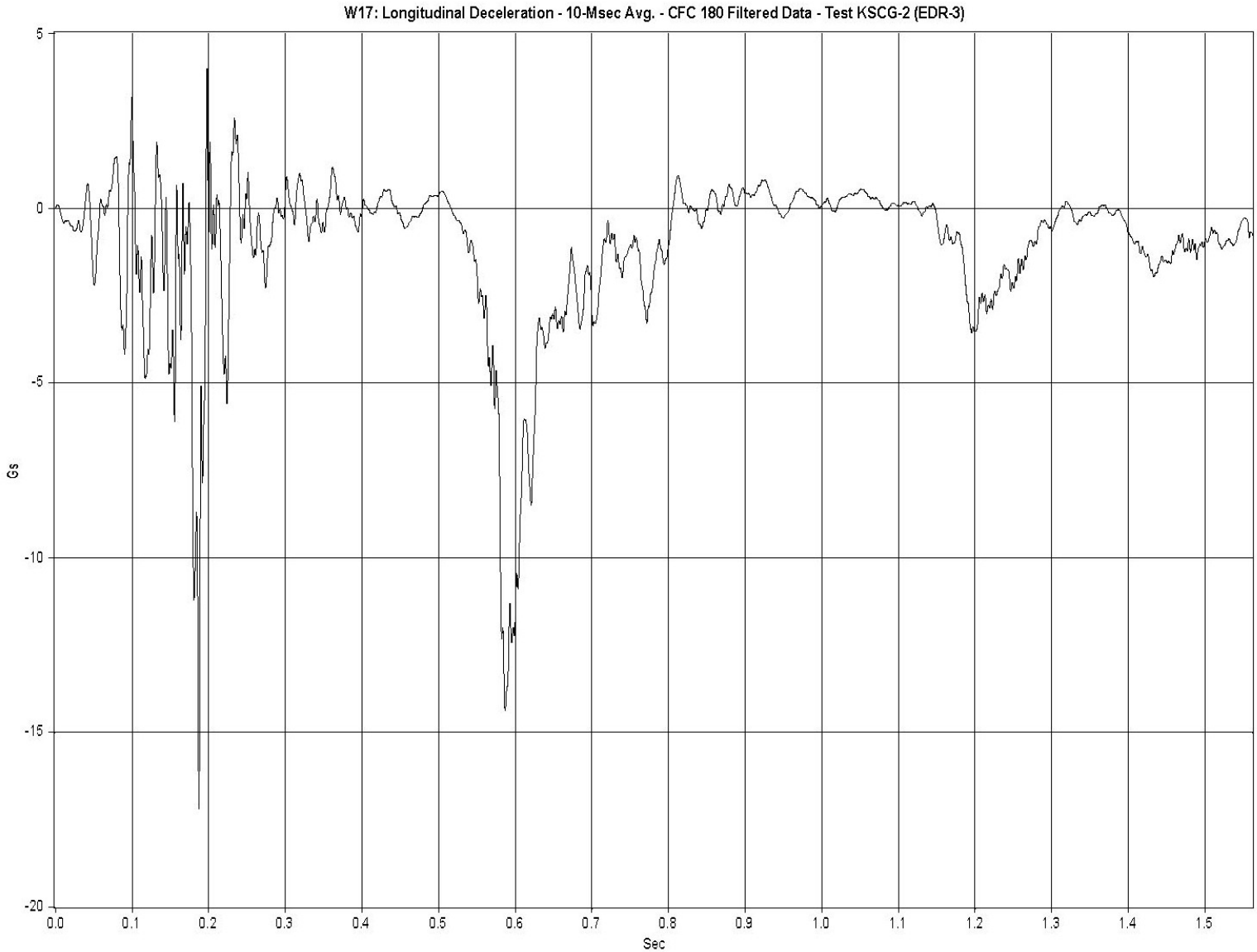

Figure F-1. Graph of Longitudinal Deceleration, Test KSCG-2

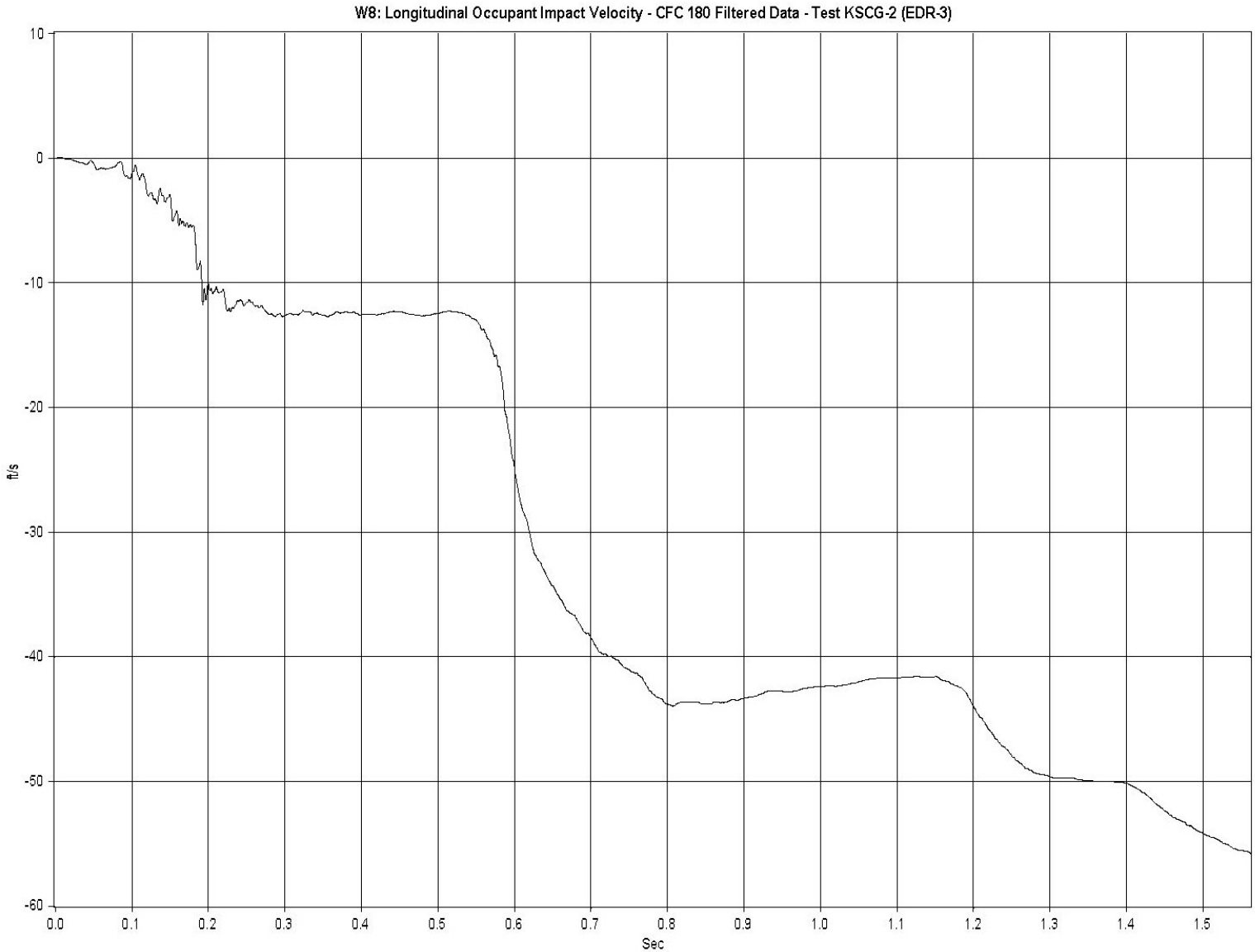

Figure F-2. Graph of Longitudinal Occupant Impact Velocity, Test KSCG-2

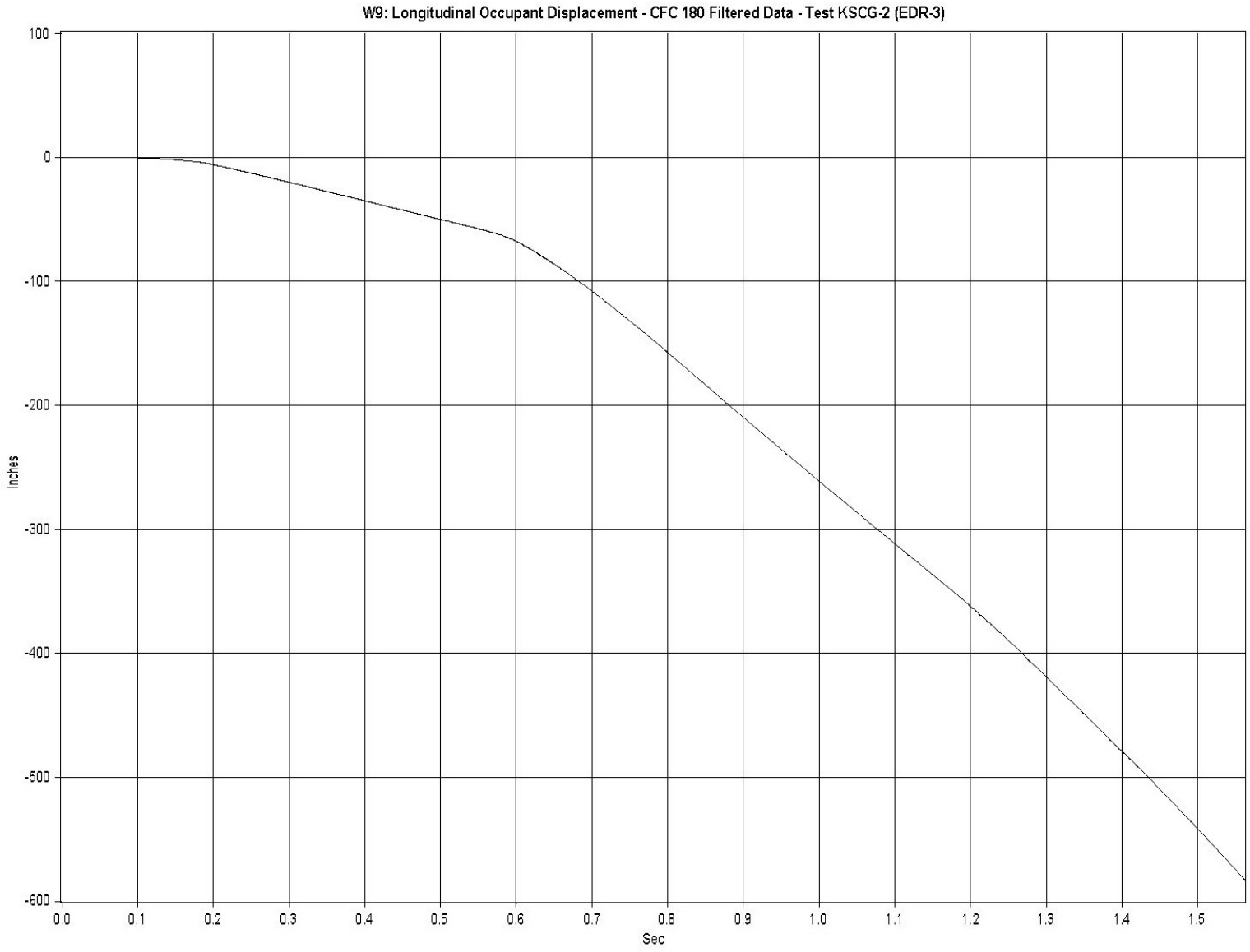

Figure F-3. Graph of Longitudinal Occupant Displacement, Test KSCG-2

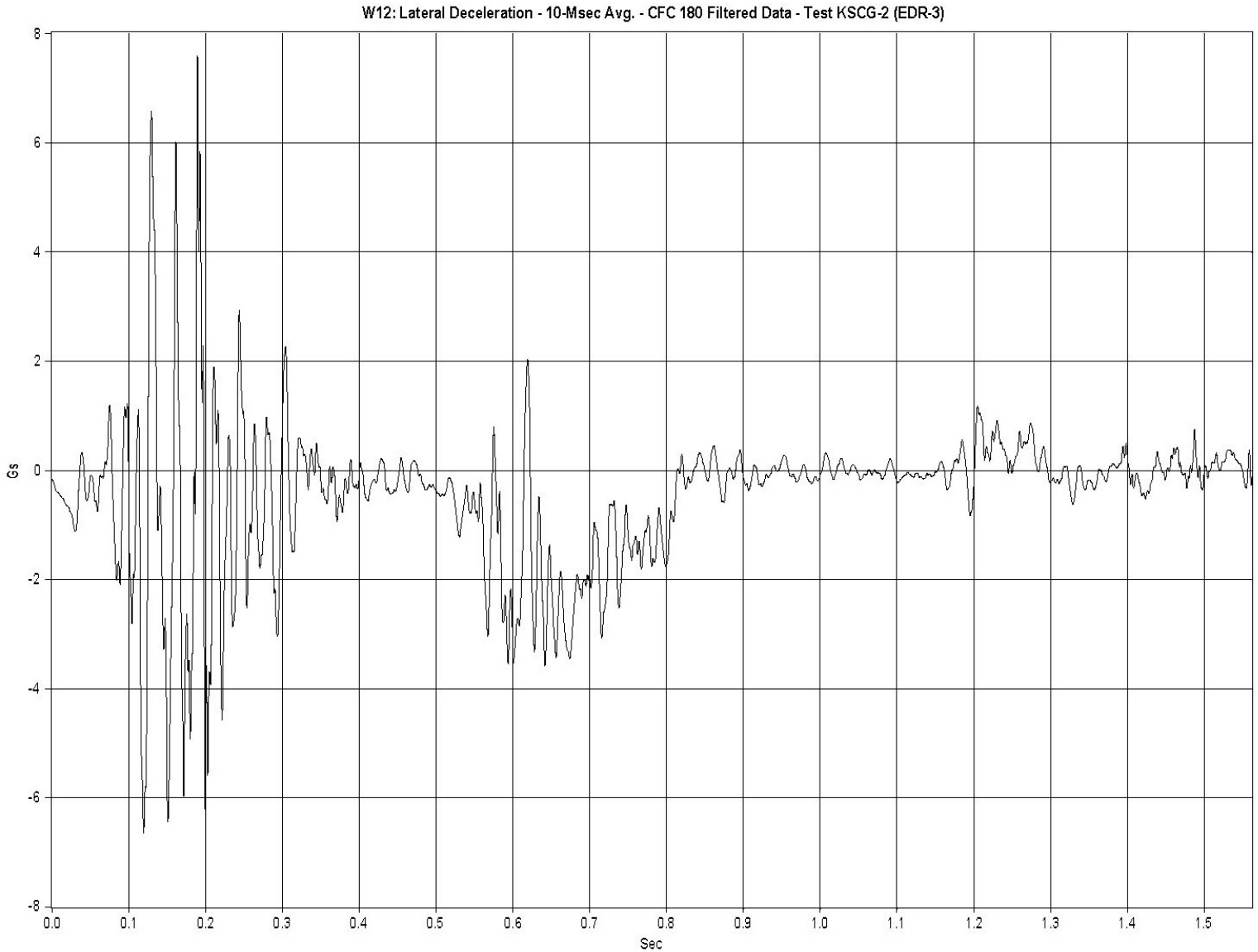

Figure F-4. Graph of Lateral Deceleration, Test KSCG-2

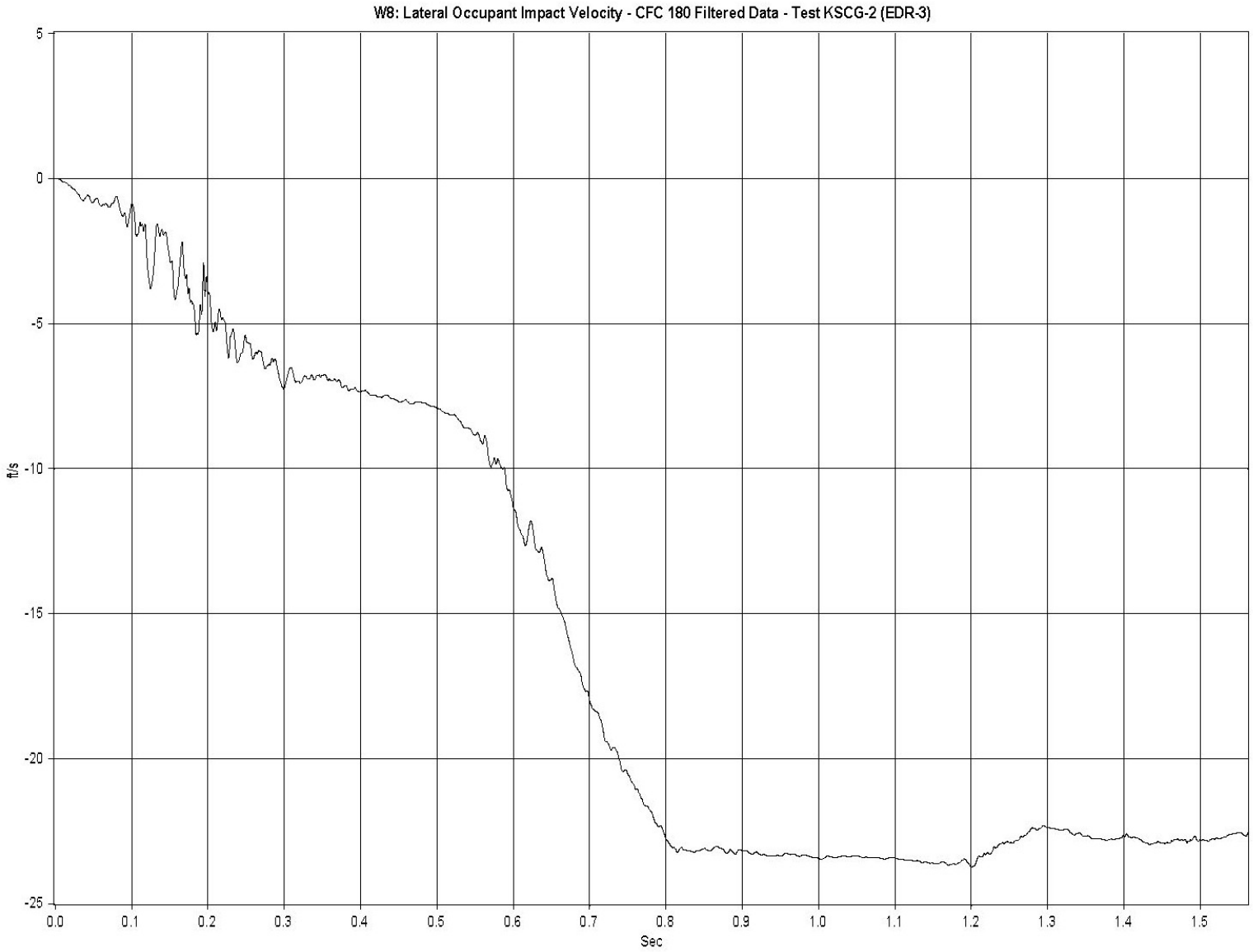

Figure F-5. Graph of Lateral Occupant Impact Velocity, Test KSCG-2

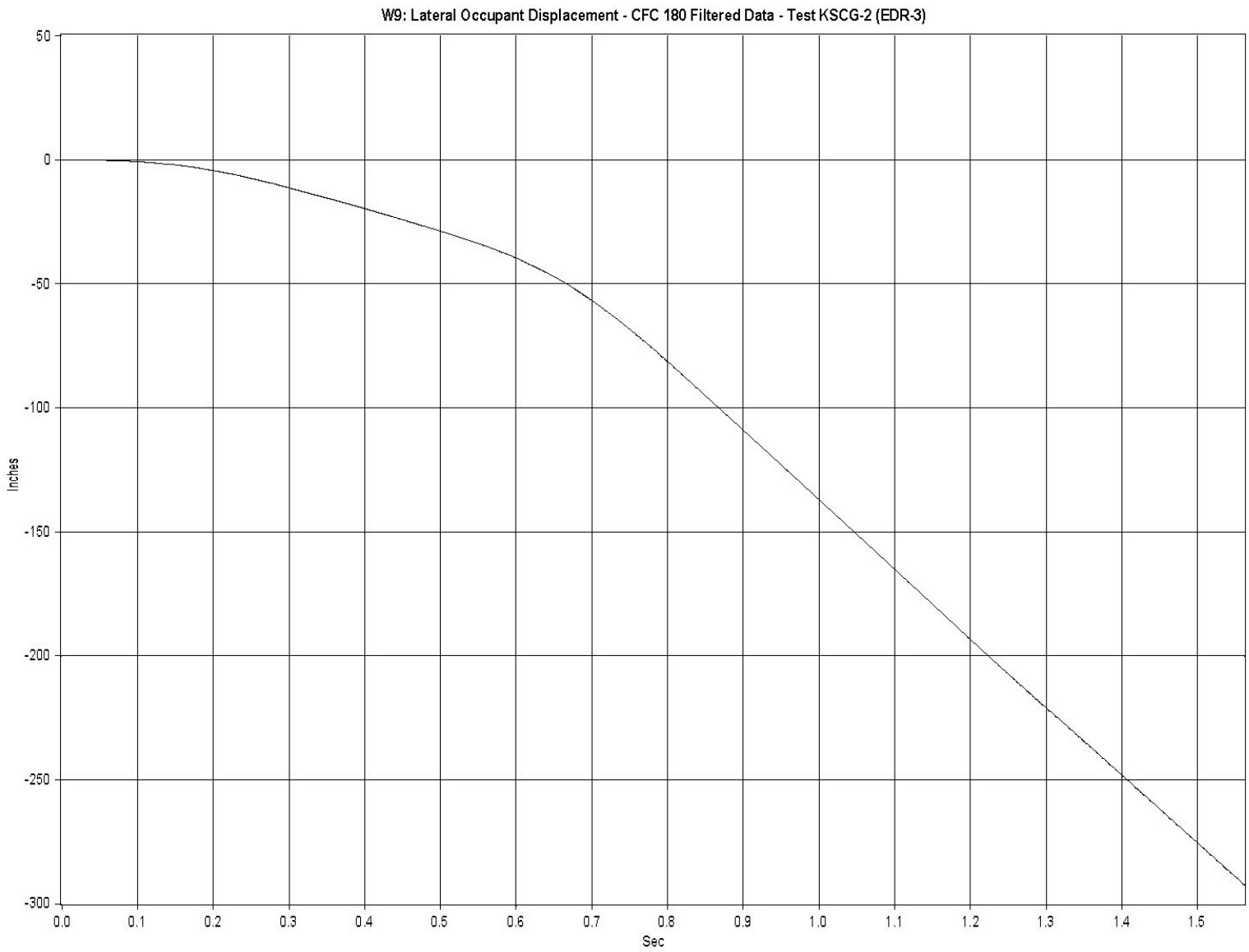

Figure F-6. Graph of Lateral Occupant Displacement, Test KSCG-2

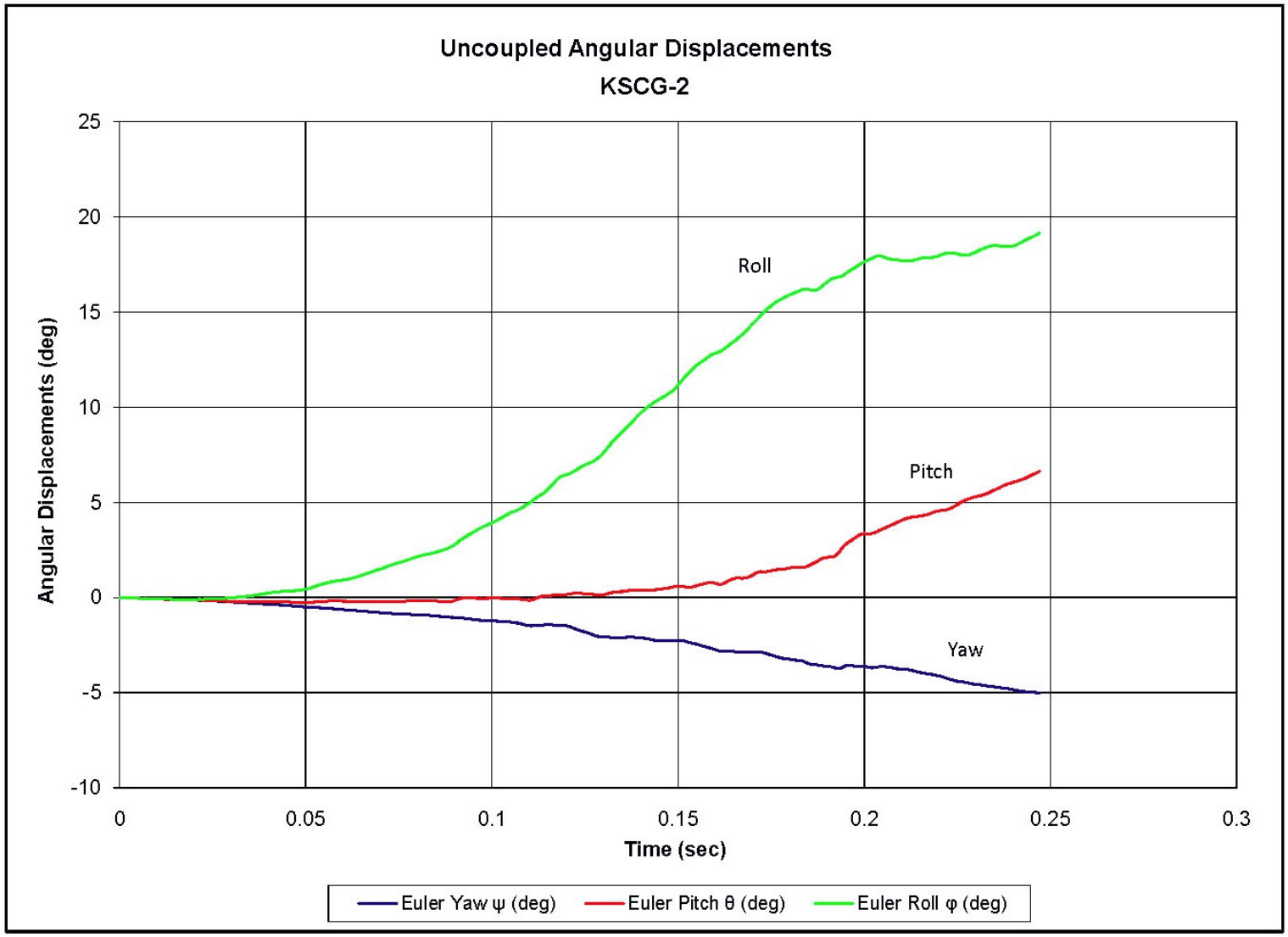

Figure F-7. Graph of Roll, Pitch, and Yaw Angular Displacements, Test KSCG-2 (Note: Time zero is impact with the culvert grate)