*Midwest States' Regional Pooled Fund Research Program*
*Fiscal Year 2003-2004 (Year 14)*
*Research Project Number SPR-3 (017)*
*NDOR Sponsoring Agency Code RPFP-04-05*

# DEVELOPMENT OF A STAND-ALONE CONCRETE BRIDGE PIER PROTECTION SYSTEM

Submitted by

Scott K. Rosenbaugh, M.S.C.E., E.I.T.
Research Associate Engineer

Ronald K. Faller, Ph.D., P.E.
Research Assistant Professor

Jason A. Hascall, M.S.C.E., E.I.T.
Former Graduate Research Assistant

Erin M. Allison
Undergraduate Research Assistant

Robert E. Bielenberg, M.S.M.E., E.I.T
Research Associate Engineer

John R. Rohde, Ph.D., P.E.
Associate Professor

Karla A. Polivka, M.S.M.E., E.I.T
Research Associate Engineer

Dean L. Sicking, Ph.D., P.E.
Professor and MwRSF Director

John D. Reid, Ph.D.
Professor

**MIDWEST ROADSIDE SAFETY FACILITY**
University of Nebraska-Lincoln
527 Nebraska Hall
Lincoln, Nebraska 68588-0529
(402) 472-0965

Submitted to

**MIDWEST STATES' REGIONAL POOLED FUND PROGRAM**
Nebraska Department of Roads
1500 Nebraska Highway 2
Lincoln, Nebraska 68502

MwRSF Research Report No. TRP-03-190-08

April 18, 2008

# TECHNICAL REPORT DOCUMENTATION PAGE

| | | |
|---|---|---|
| 1. Report No.<br>TRP-03-190-08 | 2. | 3. Recipient's Accession No. |
| 4. Title and Subtitle<br>Development of a Stand-Alone Concrete Bridge Pier Protection System | | 5. Report Date<br>April 18, 2008<br>6. |
| 7. Author(s)<br>Rosenbaugh, S.K., Faller, R.K., Hascall, J.A., Allison, E.M., Bielenberg, R.W., Rohde, J.R., Polivka, K.A., Sicking, D.L., and Reid, J.D. | | 8. Performing Organization Report No.<br>TRP-03-190-08 |
| 9. Performing Organization Name and Address<br>Midwest Roadside Safety Facility (MwRSF)<br>University of Nebraska-Lincoln<br>527 Nebraska Hall<br>Lincoln, Nebraska 68588-0529 | | 10. Project/Task/Work Unit No.<br>11. Contract © or Grant (G) No.<br>SPR-3 (017) |
| 12. Sponsoring Organization Name and Address<br>Midwest States' Regional Pooled Fund Program<br>Nebraska Department of Roads<br>1500 Nebraska Highway 2<br>Lincoln, Nebraska 68502 | | 13. Type of Report and Period Covered<br>Draft Report: 2004 – 2008<br>14. Sponsoring Agency Code<br>RPFP-04-05 |
| 15. Supplementary Notes<br>Prepared in cooperation with U.S. Department of Transportation, Federal Highway Administration. | | |

16. Abstract (Limit: 200 words)


In order to prevent vehicles from impacting bridge piers located in the medians of arterial roadways, roadside barriers are warranted. For instances where roadside space is limited, rigid concrete barriers are often used to shield the bridge piers. These concrete barriers need to be anchored so that they do not translate nor rotate during vehicle impacts. If the roadway slabs do not extend far enough into the median in order to provide adequate anchorage, a footing may be required. Therefore, a concrete barrier with a stand-alone concrete footing was designed, constructed, and crash tested.

The objective of the study was to evaluate the safety performance of an 813-mm (32-in.) tall, vertical concrete parapet shielding a bridge pier according to the Test Level 3 (TL-3) criteria established by NCHRP Report No. 350. The barrier width and reinforcement were optimized to provide adequate strength at minimal construction costs. A distance of 425 mm (16.75 in.) between the barrier face and bridge pier was determined necessary to prevent critical vehicle snag. The footing was designed to carry the barrier overturning moment during severe impacts, and thus maintaining the offset distance to the front face of the bridge pier. One full-scale crash test was performed with a ¾-ton pickup truck. Following the successful redirection of the pickup, the safety performance of the stand-alone, vertical concrete barrier was determined to be acceptable according to the TL-3 evaluation criteria specified in NCHRP Report No. 350.


| | | | |
|---|---|---|---|
| 17. Document Analysis/Descriptors<br>Roadside Safety, Concrete Barrier, Vertical Barrier, Stand-Alone, Barrier Footing, Bridge Pier, TL-3, Crash Testing, Pickup, NCHRP Report 350, Compliance Test | | 18. Availability Statement<br>No restrictions. Document available from: National Technical Information Services, Springfield, Virginia 22161 | |
| 19. Security Class (this report) | 20. Security Class (this page) | 21. No. of Pages<br>118 | 22. Price |

## DISCLAIMER STATEMENT

The contents of this report reflect the views of the authors who are responsible for the facts and the accuracy of the data presented herein. The contents do not necessarily reflect the official views nor policies of the State Highway Departments participating in the Midwest State's Regional Pooled Fund Research Program nor the Federal Highway Administration. This report does not constitute a standard, specification, or regulation.

## ACKNOWLEDGEMENTS

The authors wish to acknowledge several sources that made a contribution to this project: (1) the Midwest States' Regional Pooled Fund Program funded by the Connecticut Department of Transportation, Illinois Department of Transportation, Iowa Department of Transportation, Kansas Department of Transportation, Minnesota Department of Transportation, Missouri Department of Transportation, Nebraska Department of Roads, New Jersey Department of Transportation, Ohio Department of Transportation, South Dakota Department of Transportation, Texas Department of Transportation, Wisconsin Department of Transportation, and Wyoming Department of Transportation for sponsoring this project; and (2) MwRSF personnel for constructing the barriers and conducting the crash tests.

A special thanks is also given to the following individuals who made a contribution to the completion of this research project.

**Midwest Roadside Safety Facility**

J.C. Holloway, M.S.C.E., E.I.T., Research Manager
C.L. Meyer, B.S.M.E., E.I.T., Research Engineer II
A.T. Russell, B.S.B.A., Laboratory Mechanic II
K.L. Krenk, B.S.M.A, Field Operations Manager
A.T. McMaster, Laboratory Mechanic I
Undergraduate and Graduate Assistants

**Connecticut Department of Transportation**

Dionysia Oliveira, Transportation Engineer 3

**Illinois Department of Transportation**

David Piper, P.E., Highway Policy Engineer

**Iowa Department of Transportation**

David Little, P.E., Assistant District Engineer
Deanna Maifield, P.E., Methods Engineer
Chris Poole, Transportation Engineer Specialist

**Kansas Department of Transportation**

Ron Seitz, P.E., Bureau Chief
Rod Lacy, P.E., Road Design Leader
Scott King, P.E., Road Design Leader

**Minnesota Department of Transportation**

Mohammad Dehdashti, P.E., Design Standard Engineer
Michael Elle, P.E., Design Standard Engineer

**Missouri Department of Transportation**

Joseph Jones, P.E., Technical Support Engineer

**Nebraska Department of Roads**

Amy Starr, P.E., Research Engineer
Phil TenHulzen, P.E., Design Standards Engineer
Jodi Gibson, Research Coordinator

**New Jersey Department of Transportation**

Kiran Patel, P.E., P.M.P., C.P.M., Deputy State Transportation Engineer

**Ohio Department of Transportation**

Dean Focke, P.E., Standards Engineer

**South Dakota Department of Transportation**

David Huft, Research Engineer
Bernie Clocksin, Lead Project Engineer
Paul Olen, Project Engineer

**Texas Department of Transportation**

Mark Bloschock, P.E., Supervising Design Engineer
Mark Marek, P.E., Design Engineer

**Wisconsin Department of Transportation**

John Bridwell, P.E., Standards Development Engineer
Eric Emerson, P.E., Standards Development Engineer

**Wyoming Department of Transportation**

William Wilson, P.E., Standards Engineer

**Federal Highway Administration**

John Perry, P.E., Nebraska Division Office
Danny Briggs, Nebraska Division Office

**Dunlap Photography**

James Dunlap, President and Owner

## TABLE OF CONTENTS

TECHNICAL REPORT DOCUMENTATION PAGE ..... i

DISCLAIMER STATEMENT ..... ii

ACKNOWLEDGEMENTS ..... iii

TABLE OF CONTENTS ..... vi

LIST OF FIGURES ..... viii

LIST OF TABLES ..... x

1 INTRODUCTION ..... 1
- 1.1 Background and Problem Statement ..... 1
- 1.2 Research Objectives ..... 3
- 1.3 Research Scope ..... 3

2 LITERATURE REVIEW ..... 5

3 BARRIER DESIGN AND ANALYSIS ..... 6
- 3.1 Barrier Geometry and Height ..... 6
- 3.2 Barrier Optimization Factors ..... 6
  - 3.2.1 Barrier Width ..... 7
  - 3.2.2 Longitudinal Rebar ..... 7
  - 3.2.3 Stirrup Rebar ..... 8
- 3.3 Optimum Barrier Design Requirements ..... 8
- 3.4 Barrier Optimization Results ..... 9
- 3.5 Barrier End Section Design ..... 11
- 3.6 Anchorage – Barrier Footing Design ..... 12
- 3.7 Barrier Lateral Placement ..... 14

4 DESIGN DETAILS ..... 16

5 TEST REQUIREMENTS AND EVALUATION CRITERIA ..... 25
- 5.1 Test Requirements ..... 25
- 5.2 Evaluation Criteria ..... 26

6 TEST CONDITIONS ..... 28
- 6.1 Test Facility ..... 28
- 6.2 Vehicle Tow and Guidance System ..... 28
- 6.3 Test Vehicles ..... 28
- 6.4 Data Acquisition Systems ..... 33
  - 6.4.1 Accelerometers ..... 33
  - 6.4.2 Rate Transducers ..... 34

6.4.3 Pressure Tape Switches ..... 34
6.4.4 High Speed Photography ..... 34
6.4.5 Strain Gauges ..... 35

7 FULL SCALE CRASH TEST NO. CBPP-1 ..... 36
7.1 Test CBPP-1 ..... 36
7.2 Test Description ..... 36
7.3 Barrier Damage ..... 37
7.4 Vehicle Damage ..... 38
7.5 Occupant Risk ..... 39
7.6 Resultant Impact Force Calculation ..... 40
7.7 Discussion ..... 40

8 STRAIN GAUGE ANALYSIS ..... 62

9 SUMMARY, CONCLUSIONS, AND RECCOMENDATIONS ..... 65

10 REFERENCES ..... 69

11 APPENDICES ..... 71
APPENDIX A. Analysis of Capacity and Cost for All Barrier Configurations ..... 72
APPENDIX B. Footing Design Calculations for Torsion ..... 88
APPENDIX C. English-Unit Design Details ..... 93
APPENDIX D. Test CBPP-1 Summary Sheet in English-Units ..... 98
APPENDIX E. Occupant Compartment Deformation Data ..... 100
APPENDIX F. Accelerometer and Rate Transducer Data Plots ..... 105
APPENDIX G. Strain Gauge Data ..... 113

## LIST OF FIGURES

Figure 1. Test Installation Layout, Test CBPP-1 ..... 19
Figure 2. Design Details and Reinforcement Placement, Test CBPP-1 ..... 20
Figure 3. Internal Steel Reinforcement Dimensions, Test CBPP-1 ..... 21
Figure 4. Location of Strain Gauges, Test CBPP-1 ..... 22
Figure 5. Barrier Test Installation, Test CBPP-1 ..... 23
Figure 6. Backside Test Installation and Strain Gauge Wires, Test CBPP-1 ..... 24
Figure 7. Test Vehicle, Test No. CBPP-1 ..... 29
Figure 8. Vehicle Dimensions, Test No. CBPP-1 ..... 30
Figure 9. Target Geometry, Test No. CBPP-1 ..... 32
Figure 10. Camera Locations, Test No. CBPP-1 ..... 35
Figure 11. Summary of Test Results and Sequential Photographs, Test CBPP-1 ..... 42
Figure 12. Additional Sequential Photographs, Test CBPP-1 ..... 43
Figure 13. Additional Sequential Photographs, Test CBPP-1 ..... 44
Figure 14. Additional Sequential Photographs, Test CBPP-1 ..... 45
Figure 15. Documentary Photographs, Test CBPP-1 ..... 46
Figure 16. Impact Location, Test CBPP-1 ..... 47
Figure 17. Vehicle Final Position and Trajectory Marks, Test CBPP-1 ..... 48
Figure 18. System Damage, Test CBPP-1 ..... 49
Figure 19. System Damage, Contact Marks and Gouging, Test CBPP-1 ..... 50
Figure 20. System Damage, Front Side Concrete Cracks, Test CBPP-1 ..... 51
Figure 21. System Damage, Back Side Concrete Cracks, Test CBPP-1 ..... 52
Figure 22. System Damage, Soil Gap, Test CBPP-1 ..... 53
Figure 23. Vehicle Damage, Test CBPP-1 ..... 54
Figure 24. Vehicle Damage, Left-Front Wheel, Test CBPP-1 ..... 55
Figure 25. Vehicle Damage, Left Side, Test CBPP-1 ..... 56
Figure 26. Vehicle Damage, Left Side, Test CBPP-1 ..... 57
Figure 27. Vehicle Damage, Hood and Windshield, Test CBPP-1 ..... 58
Figure 28. Vehicle Damage, Occupant Compartment, Test CBPP-1 ..... 59
Figure 29. Vehicle Damage, Rear of Vehicle, Test CBPP-1 ..... 60
Figure 30. Lateral and Longitudinal Impact Forces vs. Time, Test CBPP-1 ..... 61
Figure 31. Strain vs. Time Data From Strain Gauge Results ..... 62
Figure 32. Stress vs. Time Data From Strain Gauge Results ..... 63
Figure 33. Vehicle Position at (a) 0.050 Seconds and (b) 0.200 Seconds After Impact ..... 64
Figure B-1. Footing Cross Section - Interior Section ..... 90
Figure B-2. Footing Cross Section - End Section ..... 92
Figure C-1. Test Installation Layout, Test CBPP-1 ..... 94
Figure C-2. Design Details and Reinforcement Placement, Test CBPP-1 ..... 95
Figure C-3. Internal Steel Reinforcement Dimensions, Test CBPP-1 ..... 96
Figure C-4. Location of Strain Gauges, Test CBPP-1 ..... 97
Figure D-1. Summary of Test Results and Sequential Photographs (English), Test CBPP-1 ..... 99
Figure E-1. Occupant Compartment Deformation Data – Set 1, Test CBPP-1 ..... 101
Figure E-2. Occupant Compartment Deformation Data – Set 2, Test CBPP-1 ..... 102
Figure E-3. Addition Occupant Compartment Deformation Data, Test CBPP-1 ..... 103

Figure E-4. Occupant Compartment Deformation Index (OCDI), Test CBPP-1 ..... 104
Figure F-1. Graph of 10-ms Average Longitudinal Deceleration, Test CBPP-1..... 106
Figure F-2. Graph of Longitudinal Occupant Impact Velocity, Test CBPP-1 ..... 107
Figure F-3. Graph of Longitudinal Occupant Displacement, Test CBPP-1 ..... 108
Figure F-4. Graph of 10-ms Average Lateral Deceleration, Test CBPP-1 ..... 109
Figure F-5. Graph of Lateral Occupant Impact Velocity, Test CBPP-1..... 110
Figure F-6. Graph of Lateral Occupant Displacement, Test CBPP-1..... 111
Figure F-7. Graph of Vehicle Roll, Pitch, and Yaw Angular Displacements, Test CBPP-1..... 112
Figure G-1. Results of Strain Gauge B1, Test CBPP-1 ..... 114
Figure G-2. Results of Strain Gauge B2, Test CBPP-1 ..... 115
Figure G-3. Results of Strain Gauge B3, Test CBPP-1 ..... 116
Figure G-4. Results of Strain Gauge B4, Test CBPP-1 ..... 117
Figure G-5. Results of Strain Gauge B5, Test CBPP-1 ..... 118
Figure G-6. Results of Strain Gauge B6, Test CBPP-1 ..... 119

## LIST OF TABLES

Table 1. Top Nine Design Configurations ..... 10
Table 2. Top Nine Design Configurations – English Units ..... 11
Table 3. Barrier End Section Design Analysis ..... 12
Table 4. Barrier End Section Design Analysis – English Units ..... 12
Table 5. Actual Barrier Width Measurements ..... 18
Table 6. NCHRP Report No. 350 Test Level 3 Crash Test Conditions ..... 26
Table 7. NCHRP Report No. 350 Evaluation Criteria for Crash Testing ..... 27
Table 8. Camera and Lens Information, Test No. CBPP-1 ..... 35
Table 9. Summary of Safety Performance Evaluation Results, Test CBPP-1 ..... 68
Table A-1. Calculated Ultimate Strengths and Costs for Barrier Configurations ..... 73

# 1 INTRODUCTION

## 1.1 Background and Problem Statement

The use of the divided highway separated by a median area has been a valuable safety feature in modern roadway design. The median allows for a safe recovery area for errant vehicles to come to rest without impeding upon oncoming traffic. However, it is possible that the median is not always a safe zone for vehicle recovery. Many roadway structures are built in the median, such as bridge supports, drainage structures, and large sign supports. These structures present hazards to vehicles in the median as well as along the roadside.

Rigid hazards, such as bridge piers, are often found in the vicinity of roadway overpasses both in the medians and along the roadsides. Historically, these fixed object hazards have been shielded with various types of barrier systems. For example, closed and open guardrail envelopes have been used to protect motorists from impacting both the upstream and traffic-side faces of bridge piers. Closed guardrail envelopes have consisted of bullnose median barrier systems as well as box beam pier protection systems. For these closed systems, the guardrail is wrapped completely around the hazard. Open guardrail envelopes have consisted of the placement of long runs of strong-post, W-beam or thrie beam guardrail systems with tangent or flared guardrail end treatments at the ends as well as cable barrier systems with the use of appropriate end treatments. Bridge piers are also shielded with rigid parapets either attached to the front face of the piers or placed directly in front of the piers with only an offset corresponding to the top width of the barrier. The upstream ends of the rigid parapets are typically shielded with crash cushions, inertial sand barrel systems, or strong-post guardrail systems with guardrail end terminals.

For all of the designs described previously, consideration must be given to the offset between the barrier face and the bridge pier in order to prevent vehicle penetration below or

extension over the barrier, thus causing excessive vehicle snag on the pier. For flexible and semi-rigid barrier systems, full-scale crash testing programs have provided general guidance for the placement of deformable barrier systems adjacent to the piers. However, no full-scale vehicle crash testing has been performed with piers placed behind rigid parapets, thus resulting in very limited guidance for determining the appropriate lateral placement of reinforced concrete parapets in front of the bridge piers.

In the late 1990s, Midwest Roadside Safety Facility (MwRSF) researchers undertook a study to investigate vehicle impacts into rigid parapets in order to provide guidance on the future placement of attachments on top of or behind bridge rails and median barriers [1]. During this study, hundreds of crash test films and videos were reviewed and maximum lateral vehicle extensions over the barriers were measured. From these results, intrusion zones were developed for various barrier categories, heights, and performance levels. The Zone of Intrusion (ZOI) methodology provided a recommended offset from the top corner of the front barrier face to the face of the attachment. If the recommended lateral offsets were utilized, then it was believed that no further crash testing would be required. If placement within this ZOI was desired, then it was believed that additional crash testing was necessary in order to determine that the attachment would not negatively affect barrier performance nor provide undue risks to the occupants, other motorists, or pedestrians nearby. Using the ZOI guidelines and without requiring subsequent crash testing, the minimum lateral offset for rigid attachments placed behind the front vertical face of 813-mm (32-in.) tall, Test Level 3 (TL-3) concrete barriers was 610 mm (24 in.). For the TL-4 conditions, the minimum lateral offset was found to be 2,032 mm and 864 mm (80 in. and 34 in.) for the cargo box and truck cab, respectively.

For the many bridge piers found within medians and along roadsides, TL-3 barriers are used to provide adequate protection for motorists. In some locations, there may only be sufficient lateral clearance for the placement of rigid parapets, and not deformable barriers, in front of the piers. As such, there exists a need to develop and evaluate an economical, reduced length, TL-3 rigid barrier system for shielding bridge piers, and other rigid fixed objects, where limited space exists for their placement. The new barrier system must consider lateral barrier placement to reduce vehicle snag over the barrier and against the pier as well as the propensity for head ejection out of the side window, thus impacting either the barrier face or the bridge pier.

### 1.2 Research Objectives

The objectives of the research project were to design, test, and evaluate an economical, reduced length, reinforced concrete barrier system to meet TL-3 guidelines found in the National Cooperative Highway Research Program (NCHRP) Report No. 350, *Recommended Procedures for the Safety Performance Evaluation of Highway Features* [2]. An objective was also to design a stand-alone foundation that would support the rigid parapet as well as withstand the forces imparted to it under TL-3 impact loading. For the barrier design, several key parameters were to be considered, including the propensity for vehicle snag against the bridge pier and head ejection out of the side window.

### 1.3 Research Scope

The research objectives were achieved by performing several tasks. First, a detailed literature review of state standards was performed to identify existing bridge pier protection methods and determine if variations of those designs may be incorporated into this new design. Second, an analysis and design effort was conducted to generate multiple design variations for the barrier and footing systems at both interior and end regions. Once completed, a cost analysis

was performed to select the most economical designs that met the design impact requirements. Fourth, one full-scale vehicle crash test was performed on one of the acceptable, economical designs using a 2,000-kg (4,409-lb) pickup truck at the target impact conditions of 100 km/h (62.14 mph) and 25 degrees. The test results were then analyzed, evaluated, and documented. Finally, conclusions and recommendations were made that pertain to the safety performance of the stand-alone, reinforced concrete barrier and limited-space pier protection system.

# 2 LITERATURE REVIEW

Before undertaking the design process for the stand-alone, concrete barrier, MwRSF researchers desired to gain an understanding of the current design practices for shielding bridge piers by the states participating in the Midwest States' Regional Pooled Fund Program. As such, MwRSF contacted personnel at various State Departments of Transportation and reviewed each state's standard drawings. All of the states were found to be using a concrete barrier between 813 and 1,067 mm (32 and 42 in.) tall. Most states were using a safety shape barrier, while only three utilized a single slope barrier. Each state had different steel configurations for reinforcing and anchoring the barrier. These configurations ranged from using only dowel bars to tie down the barrier to using a full rebar cage consisting of stirrups and numerous longitudinal bars.

Of particular interest to this study was the offset distance from the front face of the barrier to the face of the bridge piers, or obstacles being shielded, as well as the method of anchorage used to tie down the barrier. The majority of the states studied had no specified lateral offset or used only a minimum of the barrier top width. Using the barrier's top width as the lateral offset resulted in a range from 150 to 305 mm (6 to 12 in.). The anchorage systems were distributed among three popular methods: (1) utilizing dowel bars and a rigid substructure base; (2) using transverse steel to connect the barrier and the roadway slab; and (3) extending the barrier downward into a keyway made of asphalt, concrete, or soil. Only one state utilized a special concrete footing to anchor the barrier. Thus, no common method of anchoring the barrier could be identified.

# 3 BARRIER DESIGN AND ANALYSIS

## 3.1 Barrier Geometry and Height

Roadside concrete barriers come in many different geometric shapes. A few of the most popular concrete barrier shapes are the New Jersey shape, F-shape, single slope, and vertical. Each of these barrier shapes will affect the impacting vehicle differently in terms of vehicle stability, the propensity for vehicle rollover, and the magnitude of the impact forces. The ideal concrete barrier shape would maximize vehicle stability while limiting the impact forces to a safe level.

Previously, both full-scale crash testing and computer simulation modeling have shown that vehicle stability is maximized as the barrier face gets closer to vertical [3 - 4]. Also, full-scale crash testing of vertical-faced parapets has recorded vehicle decelerations below the thresholds set by NCHRP Report No. 350 [2]. Therefore, a vertical-faced geometry was selected for this concrete barrier.

The height of the barrier was set at 813 mm (32 in.), the most common height for a TL-3 concrete barrier. Keeping the height of the barrier in line with current industry practices will not only allow contractors to use the same forms on multiple projects, but it also ensures that the barrier can be attached to thrie beam guardrail and other common transition systems. In addition, the 813-mm (32-in.) tall barrier would not pose undue risk of head slap against the parapet due to occupant head ejection out of the side window.

## 3.2 Barrier Optimization Factors

The goal of any barrier design is to find the combination of barrier component sizes and dimensions that satisfy all structural needs while minimizing cost. The barrier design parameters used during this project included the barrier width, the longitudinal rebar configuration, and the

stirrup configuration. Practical limitations were identified for each of these variable components so that a feasible barrier design could be found in a short amount of time.

### 3.2.1 Barrier Width

Varying the barrier width affects both the bending strength and the overturning strength of the barrier. However, widening the barrier adds material and cost to the barrier while also increasing the required median space needed to install the barrier. Thus, the barrier width needed to be optimized to balance these effects.

Possibilities for the top width were limited to the range between 152 mm (6 in.) and 203 mm (8 in.). A lower bound of 152 mm (6 in.) was set to allow for sufficient thickness to fit both vertical stirrups and longitudinal steel inside the barrier. The upper bound of 203 mm (8 in.) was selected for two reasons: (1) early calculations showed this width could provide more than adequate structural capacity and (2) larger widths would require more median space to install the barrier.

### 3.2.2 Longitudinal Rebar

The longitudinal bars in a concrete barrier affect the overall bending strength by providing the tension reinforcement. Both the rebar size and quantity of bars was varied through the barrier cross section. Rebar sizes between #4 and #6 bars, 13 and 19 mm (0.5 and 0.75 in.) in diameter, respectively, were considered for use as longitudinal steel. The quantity of bars in the cross section varied from four to twelve by increments of two. Quantities were always even numbers because the same amount of reinforcement was used for both sides of the barrier. Also, only one rebar size was considered for each longitudinal steel configuration, i.e. bars sizes were not mixed and matched within a single cross section configuration.

### 3.2.3 Stirrup Rebar

Concrete barrier stirrups affect both the overturning capacity and shear resistance. As with the longitudinal steel, rebar sizes between #4 and #6 bars were considered. The spacing between stirrups was varied from 152 to 610 mm (6 to 24 in.) on 152-mm (6-in.) intervals. The minimum spacing of 152 mm (6 in.) was set to allow concrete flow around the cage during casting. The maximum spacing of 610 mm (24 in.) was selected because a larger spacing would not develop shear resistance adequately. All stirrups had 38 mm (1.5 in.) of concrete clear cover.

## 3.3 Optimum Barrier Design Requirements

All of the barrier configurations were required to incorporate enough longitudinal steel to meet shrinkage and temperature requirements. Providing shrinkage and temperature steel ensures barrier longevity and is believed to eliminate the need for expansion/contraction joints. However, it remains common practice for states to require such joints every 30 to 60 m (100 to 200 ft). The American Concrete Institute sets the required area of shrinkage and temperature steel as 0.0018 times the cross-sectional area [5]. Of course, the specific amount of steel needed is then a function of the barrier width. All barrier design options that did not meet the minimum temperature and shrinkage steel requirement were eliminated from further consideration.

The barrier was also required to have sufficient structural capacity to redirect a vehicle under the prescribed TL-3 impact conditions found in NCHRP Report No. 350. According to the *AASHTO LRFD Bridge Design Specifications* [6], a TL-3 bridge rail has a design load of 240 kN (54 kips). However, MwRSF wanted to take a more aggressive design approach with this barrier. Therefore, the design load was lowered to 226 kN (50 kips).

The ultimate strengths of rigid concrete parapets are commonly calculated using yield line theory [7] and a resistance safety factor of 0.9. However, yield line theory has been shown to

be a conservative method of calculating barrier strength. In 2004, the Texas Transportation Institute (TTI) ran three static tests on a section of reinforced, New Jersey shape barrier [8]. With the exception of one test in which the reinforcing steel was incorrectly placed, the tests resulted in about a 10 percent higher ultimate strength than estimated using yield line theory. This supports the aggressive design approach used by MwRSF when using yield line theory to predict the ultimate capacity of each barrier option.

After satisfying all structural requirements, only the barriers with the lowest construction costs should be considered for use. Calculating the cost of each barrier configuration was completed using estimated prices of $62.12 per cubic meter ($81.25 per cubic yard) of concrete and $0.46 per kilogram ($1.02 per pound) of steel rebar. These cost estimates were derived from discussions with multiple construction companies in the Midwest region. Included in the estimates are both the material cost and the labor needed to bend and tie the rebar. Calculated concrete volumes had the volume of steel subtracted out of the geometric shape. The cost of steel was applied to both the longitudinal rebar and the vertical stirrups. Barrier configurations were then compared to one another on a cost per unit length basis.

### 3.4 Barrier Optimization Results

Every combination of longitudinal steel, stirrup bar size, stirrup spacing, and barrier width identified previously was used in the optimization process, resulting in 900 barrier configurations. The ultimate strength of each configuration was calculated using yield line theory, and the cost per unit length of each barrier configuration was calculated using the cost estimates discussed in Section 3.2. Appendix A contains the calculated strengths and costs for all 900 possible barrier configurations.

Barrier configurations not meeting the minimum ultimate capacity of 223 kN (50 kips) were eliminated from consideration. The configurations with the necessary structural capacity were then evaluated and compared to one another in terms of cost efficiency. Tables 1 and 2 list the nine most cost efficient designs along with the calculated ultimate strength and cost per unit length in metric and English units, respectively. These nine were the only structurally adequate configurations to cost less than $49.20 per meter ($15.00 per foot).

Although all of the designs in Tables 1 and 2 would be acceptable alternatives, the highlighted design was selected as the optimum design by MwRSF for three reasons: (1) the wide stirrup spacing of 610 mm (24 in.) requires less steel tying; (2) using six longitudinal bars seems more reasonable and may spread the load through the barrier cross section better than with using four bars; and (3) the 203-mm (8-in.) width provided more room to work inside of the barrier and therefore increased constructability. Also, all of the top designs were very similar in cost, differing by less than $3.28 per meter ($1 per foot). Design details for the selected barrier configuration are shown in Chapter 4.

**Table 1. Top Nine Design Configurations**

| Barrier Width (mm) | Stirrups | | Longitudinal Bars | | Steel (kg / m) | Concrete ($m^3$/m) | Yield Line Calculations | | Total Cost ($/m) |
|---|---|---|---|---|---|---|---|---|---|
| | Bar No. | Spacing (mm) | Bar No. | Quantity | | | Critical Length (m) | Factored Capacity Φwℓ (k) | |
| 191 | 6 | 457 | 4 | 4 | 14.53 | 0.15298 | 2.41 | 230.93 | $48.93 |
| 191 | 6 | 610 | 4 | 6 | 13.88 | 0.15306 | 3.01 | 223.66 | $47.48 |
| 191 | 6 | 610 | 5 | 4 | 14.13 | 0.15303 | 3.05 | 226.36 | $48.03 |
| 203 | 4 | 305 | 4 | 6 | 13.01 | 0.16347 | 3.11 | 227.29 | $46.62 |
| 203 | 4 | 305 | 5 | 4 | 13.25 | 0.16344 | 3.15 | 229.88 | $47.16 |
| 203 | 5 | 457 | 4 | 6 | 13.29 | 0.16344 | 3.08 | 230.98 | $47.26 |
| 203 | 5 | 457 | 5 | 4 | 13.54 | 0.16341 | 3.11 | 233.60 | $47.81 |
| 203 | 6 | 610 | 4 | 6 | 13.88 | 0.16338 | 3.01 | 239.84 | $48.58 |
| 203 | 6 | 610 | 5 | 4 | 14.13 | 0.16335 | 3.04 | 242.53 | $49.12 |

**Table 2. Top Nine Design Configurations – English Units**

| Barrier Width (in.) | Stirrups | | Longitudinal Bars | | Steel (lb. / ft) | Concrete ($yd^3$/ft) | Yield Line Calculations | | Total Cost ($/ft) |
|---|---|---|---|---|---|---|---|---|---|
| | Bar No. | Spacing (in.) | Bar No. | Quantity | | | Critical Length (ft) | Factored Capacity Φwℓ (k) | |
| 7.5 | 6 | 18 | 4 | 4 | 9.76 | 0.06099 | 7.91 | 51.90 | $14.92 |
| 7.5 | 6 | 24 | 4 | 6 | 9.33 | 0.06102 | 9.87 | 50.26 | $14.47 |
| 7.5 | 6 | 24 | 5 | 4 | 9.49 | 0.06101 | 9.99 | 50.87 | $14.64 |
| 8 | 4 | 12 | 4 | 6 | 8.74 | 0.06517 | 10.20 | 51.08 | $14.21 |
| 8 | 4 | 12 | 5 | 4 | 8.90 | 0.06516 | 10.32 | 51.66 | $14.38 |
| 8 | 5 | 18 | 4 | 6 | 8.93 | 0.06516 | 10.10 | 51.91 | $14.41 |
| 8 | 5 | 18 | 5 | 4 | 9.10 | 0.06515 | 10.22 | 52.49 | $14.57 |
| 8 | 6 | 24 | 4 | 6 | 9.33 | 0.06513 | 9.88 | 53.90 | $14.81 |
| 8 | 6 | 24 | 5 | 4 | 9.49 | 0.06512 | 9.99 | 54.50 | $14.97 |

### 3.5 Barrier End Section Design

Due to the lack of continuity near the ends of the concrete parapet, these regions are weaker and more vulnerable to structural failure. Therefore, the failure method and the yield line equations for calculating the ultimate strength are altered to specifically describe the barrier end sections [7]. The barrier end section was designed using this modified yield line analysis and the same design load as the interior section, 223 kN (50 kips).

In order to keep the end section as similar as possible to the interior section, the barrier width and the longitudinal steel configuration remained unchanged during the analysis. The stirrup size and stirrup spacing were the only variables for the end section design and were varied within the same options as described in Section 3.2.3. The results of this analysis are shown in both metric and English units in Tables 3 and 4, respectively.

The highlighted configuration in Tables 3 and 4 was selected for the barrier end section because it was the least costly of the configurations that had a ultimate strength over 223 kN (50 kips). The length of the end section was set at 3 m (10 ft) so that the end section reinforcement reaches farther into the barrier than the calculated critical length, 1.4 m (4.7 ft). This ensures that an end section impact load does not extend into the lesser reinforced interior section and cause the barrier to fail.

**Table 3. Barrier End Section Design Analysis**

| Barrier Width (mm) | Longitudinal Bars | | Stirrups | | Steel (kg / m) | Concrete ($m^3$/m) | Yield Line Calculations | | Total Cost ($/m) |
|---|---|---|---|---|---|---|---|---|---|
| | Bar No. | Quantity | Bar No. | Spacing (mm) | | | Critical Length (m) | Factored Capacity Φwℓ (k) | |
| 203 | 4 | 6 | 4 | 152 | 20.05 | 0.16256 | 1.49 | 196.18 | $62.36 |
| 203 | 4 | 6 | 4 | 305 | 13.01 | 0.16347 | 1.66 | 121.44 | $46.62 |
| 203 | 4 | 6 | 4 | 457 | 10.66 | 0.16378 | 1.81 | 90.36 | $41.37 |
| 203 | 4 | 6 | 4 | 610 | 9.49 | 0.16393 | 1.95 | 73.62 | $38.75 |
| 203 | 4 | 6 | 5 | 152 | 27.95 | 0.16155 | 1.42 | 261.99 | $80.03 |
| 203 | 4 | 6 | 5 | 305 | 16.96 | 0.16297 | 1.54 | 165.98 | $55.45 |
| 203 | 4 | 6 | 5 | 457 | 13.29 | 0.16344 | 1.65 | 123.95 | $47.26 |
| 203 | 4 | 6 | 5 | 610 | 11.46 | 0.16368 | 1.75 | 100.74 | $43.17 |
| 203 | 4 | 6 | 6 | 152 | 37.63 | 0.16036 | 1.38 | 331.25 | $101.66 |
| 203 | 4 | 6 | 6 | 305 | 21.80 | 0.16237 | 1.48 | 207.56 | $66.27 |
| 203 | 4 | 6 | 6 | 457 | 16.52 | 0.16304 | 1.55 | 160.04 | $54.47 |
| 203 | 4 | 6 | 6 | 610 | 13.88 | 0.16338 | 1.63 | 130.03 | $48.58 |

**Table 4. Barrier End Section Design Analysis – English Units**

| Barrier Width (in.) | Longitudinal Bars | | Stirrups | | Steel (lb. / ft) | Concrete ($yd^3$/ft) | Yield Line Calculations | | Total Cost ($/ft) |
|---|---|---|---|---|---|---|---|---|---|
| | Bar No. | Quantity | Bar No. | Spacing (in.) | | | Critical Length (ft) | Factored Capacity Φwℓ (k) | |
| 8 | 4 | 6 | 4 | 6 | 13.47 | 0.06481 | 4.90 | 44.08 | $19.01 |
| 8 | 4 | 6 | 4 | 12 | 8.74 | 0.06517 | 5.45 | 27.29 | $14.21 |
| 8 | 4 | 6 | 4 | 18 | 7.16 | 0.06529 | 5.95 | 20.31 | $12.61 |
| 8 | 4 | 6 | 4 | 24 | 6.37 | 0.06535 | 6.39 | 16.54 | $11.81 |
| 8 | 4 | 6 | 5 | 6 | 18.78 | 0.06441 | 4.67 | 58.87 | $24.39 |
| 8 | 4 | 6 | 5 | 12 | 11.40 | 0.06497 | 5.06 | 37.30 | $16.90 |
| 8 | 4 | 6 | 5 | 18 | 8.93 | 0.06516 | 5.42 | 27.85 | $14.41 |
| 8 | 4 | 6 | 5 | 24 | 7.70 | 0.06525 | 5.75 | 22.64 | $13.16 |
| 8 | 4 | 6 | 6 | 6 | 25.29 | 0.06393 | 4.53 | 74.44 | $30.99 |
| 8 | 4 | 6 | 6 | 12 | 14.65 | 0.06473 | 4.85 | 46.64 | $20.20 |
| 8 | 4 | 6 | 6 | 18 | 11.10 | 0.06500 | 5.10 | 35.96 | $16.60 |
| 8 | 4 | 6 | 6 | 24 | 9.33 | 0.06513 | 5.36 | 29.22 | $14.81 |

### 3.6 Anchorage – Barrier Footing Design

The barrier designed in Section **Error! Reference source not found.** was to be anchored to a stand-alone footing. A stand-alone footing has a few advantages over other anchorage systems: (1) no steel ties are needed to connect the roadway slab to the barrier; (2) the barrier and footing can be installed at anytime, including before or after the roadway slabs are placed and cured; and (3) no additional surfacing, such as asphalt, is required to form a keyway.

During an impact, the barrier will transfer load into the footing by both lateral shear and moment about the longitudinal axis. By extending the stirrups from the barrier into the footing, the shear is transferred from the barrier to the footing, and finally to the soil around the barrier. Thus, lateral shear is not a major design concern for the footing. The moment about the longitudinal axis, or the barrier overturning resistance, becomes torsion when transferred to the footing. This torsion was the critical design load for the footing.

To quantify the torsion applied to the footing, the calculated overturning moment from the barrier yield line calculations was multiplied by the critical length. The result was a torsion load of 108 kN-m (958 k-in.). For interior regions, the torsion will be resisted by the footing on both the upstream and downstream sides of impact. As such, this value was divided by two to obtain a value of 54 kN-m (479 k-in.). Also, a resistance safety factor of 0.75 was added to finalize the torsion design load of 72.2 kN-m (638.9 k-in.).

The footing reinforcement was designed by first estimating the torsion strength of the concrete section, as described by Nawy [9]. Then, using the torsion reinforcement methodology from the American Concrete Institute [5], the required amount of steel stirrups was calculated. A footing measuring 457 mm by 457 mm (18 in. by 18 in.) was the best combination of size, cost, and strength, and thus was selected for use. A #4 rebar stirrup spaced every 305 mm (12 in.) along with six #4 longitudinal bars were required as the footing's internal reinforcement. The torsion design calculations are shown in detail in Appendix B.

As with the barrier design, special attention must be given to the footing end section due to a lack of continuity. Design of the end section footing was the same as the interior footing with the exception of the magnitude of the design load. Since the load has only one path at the end sections, the calculated torsion load was not divided by two. The subsequent analysis

resulted in a 457 mm by 457 mm (18 in. by 18 in.) section reinforced by #5 rebar stirrups spaced every 152 mm (6 in.), see Appendix B for details. The length of the footing end section matched that of the barrier end section at 3 m (10 ft).

### 3.7 Barrier Lateral Placement

Prior full-scale vehicle crash testing involving pickup trucks has shown the propensity for the front corner of the engine hood and quarter panel to extend over and beyond a barrier during redirection. This result is of particular interest because the engine hood and quarter panel could extend over the barrier, snag on the bridge pier, and subsequently cause the hood to either be pushed through the windshield and into the occupant compartment or become detached from the vehicle and create debris on the roadway. Thus, the barrier must be positioned far enough laterally in front of a bridge pier in order to prevent these undesirable outcomes from occurring.

Two previous full-scale crash tests were analyzed to determine the necessary distance to offset the barrier from the front face of a bridge pier. Test no. BP-5 involved a pickup truck impacting a semi-rigid box beam guardrail which was positioned 660 mm (26 in.) in front of a bridge pier [10]. During the impact event, the hood extended over the guardrail and contacted the front face of the pier but did not snag. However, recognizing that this was a semi-rigid barrier and not a rigid concrete barrier, only the distance the hood extended past the face of the rail was deemed important. By subtracting the dynamic deflection from the calculated working width, a value of 381 mm (15 in.) was obtained for the extent of the hood past the rail. This distance was considered somewhat of a lower bound since a rigid barrier would result in higher impact forces, more vehicle deformation, and cause the hood to extend further past the barrier.

Test no. MNTR-1 involved a pickup truck impacting a timber rail attached to a series of larger concrete posts designed to support a 3-m (10-ft) sound wall [11]. The face of the rail was

offset 375 mm (14.75 in.) from the face of the concrete posts. During the test, the engine hood extended past the rail and contacted the upstream face of one of the posts, resulting in a small amount of snag. After the test, contact marks were found on the upstream face of a concrete post extending 123 mm (5 in.) beyond the front corner. Thus, the engine hood extended 502 mm (19.75 in.) past the face of the timber rail. Even with the minor snagging, the test was labeled a success because the engine hood remained attached to the vehicle, and it did not penetrate through the windshield nor pose undue risk to the occupants.

Test no. MNTR-1 demonstrated that a small amount of snag between the engine hood and the bridge pier would not adversely affect the outcome of the full-scale crash test. However, MwRSF researchers wanted to be aggressive and reduce the required offset for the barrier placed in front of a bridge pier. Therefore, the rail to pier offset was extended only 51 mm (2 in.) above that used for test no. MNTR-1, resulting in a lateral offset of 425 mm (16.75 in.). Note that this distance is larger than the minimum offset from test no. BP-5, but lower than the recommended 610-mm (24-in.) offset for TL-3 vertical parapets found in MwRSF's ZOI guidelines [1].

# 4 DESIGN DETAILS

The 15.24-m (50-ft) long test installation, as shown in Figure 1, consisted of two major structural components: (1) a 813-mm (32-in.) high by 203-mm (8-in.) thick, vertical concrete parapet and (2) a 457-mm (18-in.) by 457-mm (18-in.) concrete footing. Both of these elements ran the entire 15.24 m (50 ft) length of the test installation. Design details are shown in Figure 1 through Figure 4. The corresponding English-unit drawings are shown in Appendix C. Photographs of the test installation are shown in Figure 5 and Figure 6.

The test installation was positioned inside of a test pit which was filled with a crushed limestone aggregate soil satisfying the standard soil requirements of NCHRP Report No. 350 [2]. The front face of the barrier was placed 425 mm (16.75 in.) in front of two simulated bridge piers. These bridge piers were 1219-mm (48-in.) square concrete structures and stood 2.43 m (8 ft) above the ground surface. Bridge pier no. 2, which was the critical pier for snagging during the test, was centered behind the middle of the test installation, or 7.62 m (25 ft) from the upstream end. Bridge pier no. 1 was located behind the upstream end section of the barrier and was not a factor during the full-scale crash test.

The test installation was cast in two stages, first the footing and then the barrier. Both the footing and the barrier were cast using an L4000 concrete mix consisting of 30 percent limestone and 70 percent sand-gravel. This concrete had a prescribed minimum compressive strength of 27.6 MPa (4,000 psi). The actual compressive strength of the barrier measured from cylinder tests before the day of the test, 34 days after pouring, was 37.4 MPa (5,417 psi). Grade 60, black steel rebar was used for internal reinforcement.

The barrier internal steel reinforcement consisted of both U-shaped stirrups and straight longitudinal rebar, as shown in Figure 3. The longitudinal steel was continuous throughout the

length of the barrier and consisted of six #4 bars configured as shown in Figure 2. Stirrups in the barrier interior section, the middle 9.14 m (30 ft), consisted of #6 rebar bent into a U-shape and spaced every 610 mm (24 in.). Stirrups in the barrier end sections, the outer 2.82 m (9 ft - 3 in.), consisted of U-shaped #5 rebar spaced every 152 mm (6 in.). There was a spacing of 229 mm (9 in.) between the outermost interior stirrup and the innermost end section stirrup. All stirrups were given a concrete clear cover of 38 mm (1.5 in.) and extended 305 mm (12 in.) into the concrete footing.

The concrete footing was reinforced with both closed stirrups and straight longitudinal rebar. The interior section of the footer consisted of #4 stirrups spaced at 305 mm (12 in.) intervals and six longitudinal #4 bars configured as shown in Figure 2. The end sections consisted of #5 stirrups spaced at 152 mm (6 in.) intervals and ten longitudinal #5 bars. Similar to the barrier reinforcement, the footing stirrups were given a concrete clear cover of 38 mm (1.5 in.).

Strain gauges were installed on the internal steel of the barrier over a 3.05 m (10 ft) span beginning at the targeted impact point. Ten gauges were placed on the top two longitudinal bars and six gauges were placed on the front side of stirrups for a total of sixteen gauges. These gauges were LWK-Series weldable strain gauges from Vishay Micro-Measurements, and they were spot welded to the internal steel reinforcement. Wires connecting the strain gauges to the data collection computer were passed out the back side of the barrier as shown in Figure 6.

During the placement of the concrete barrier, the backside forms were pushed or deformed outward due to inadequate bracing. As a result, the resulting barrier was slightly wider than intended. Table 5 contains measured values of the barrier width along the length of the system at 0.61-m (2-ft) intervals. MwRSF researchers acknowledge this width increase would

result in a small increase in the strength of the concrete barrier. However, this increase in strength could not be accurately calculated because the exact position of the steel rebar inside the deformed barrier was unknown. As a result from the barrier widening, the distance from the barrier face to the bridge pier was extended from 425 to 441 mm (16.75 to 17.375 in.).

**Table 5. Actual Barrier Width Measurements**

| Distance From Upstream End | | Barrier Top Width | | Barrier Base Width | | |
|---|---|---|---|---|---|---|
| (m) | (ft) | (mm) | (in.) | (mm) | (in.) | |
| 0.00 | 0 | 203 | 8 | 203 | 8 | |
| 0.61 | 2 | 203 | 8 | 203 | 8 | |
| 1.22 | 4 | 206 | 8.125 | 203 | 8 | |
| 1.83 | 6 | 210 | 8.25 | 216 | 8.5 | |
| 2.44 | 8 | 222 | 8.75 | 229 | 9 | |
| 3.05 | 10 | 210 | 8.25 | 219 | 8.625 | |
| 3.66 | 12 | 203 | 8 | 219 | 8.625 | |
| 4.27 | 14 | 203 | 8 | 206 | 8.125 | |
| 4.88 | 16 | 203 | 8 | 206 | 8.125 | Impact |
| 5.49 | 18 | 216 | 8.5 | 216 | 8.5 | |
| 6.10 | 20 | 229 | 9 | 229 | 9 | |
| 6.71 | 22 | 219 | 8.625 | 222 | 8.75 | PIER |
| 7.32 | 24 | 213 | 8.375 | 229 | 9 | |
| 7.92 | 26 | 213 | 8.375 | 213 | 8.375 | |
| 8.53 | 28 | 210 | 8.25 | 213 | 8.375 | |
| 9.14 | 30 | 213 | 8.375 | 219 | 8.625 | |
| 9.75 | 32 | 216 | 8.5 | 210 | 8.25 | |
| 10.36 | 34 | 222 | 8.75 | 222 | 8.75 | |
| 10.97 | 36 | 216 | 8.5 | 210 | 8.25 | |
| 11.58 | 38 | 213 | 8.375 | 206 | 8.125 | |
| 12.19 | 40 | 210 | 8.25 | 210 | 8.25 | |
| 12.80 | 42 | 210 | 8.25 | 197 | 7.75 | |
| 13.41 | 44 | 210 | 8.25 | 203 | 8 | |
| 14.02 | 46 | 206 | 8.125 | 206 | 8.125 | |
| 14.63 | 48 | 203 | 8 | 203 | 8 | |
| 15.24 | 50 | 206 | 8.125 | 210 | 8.25 | |

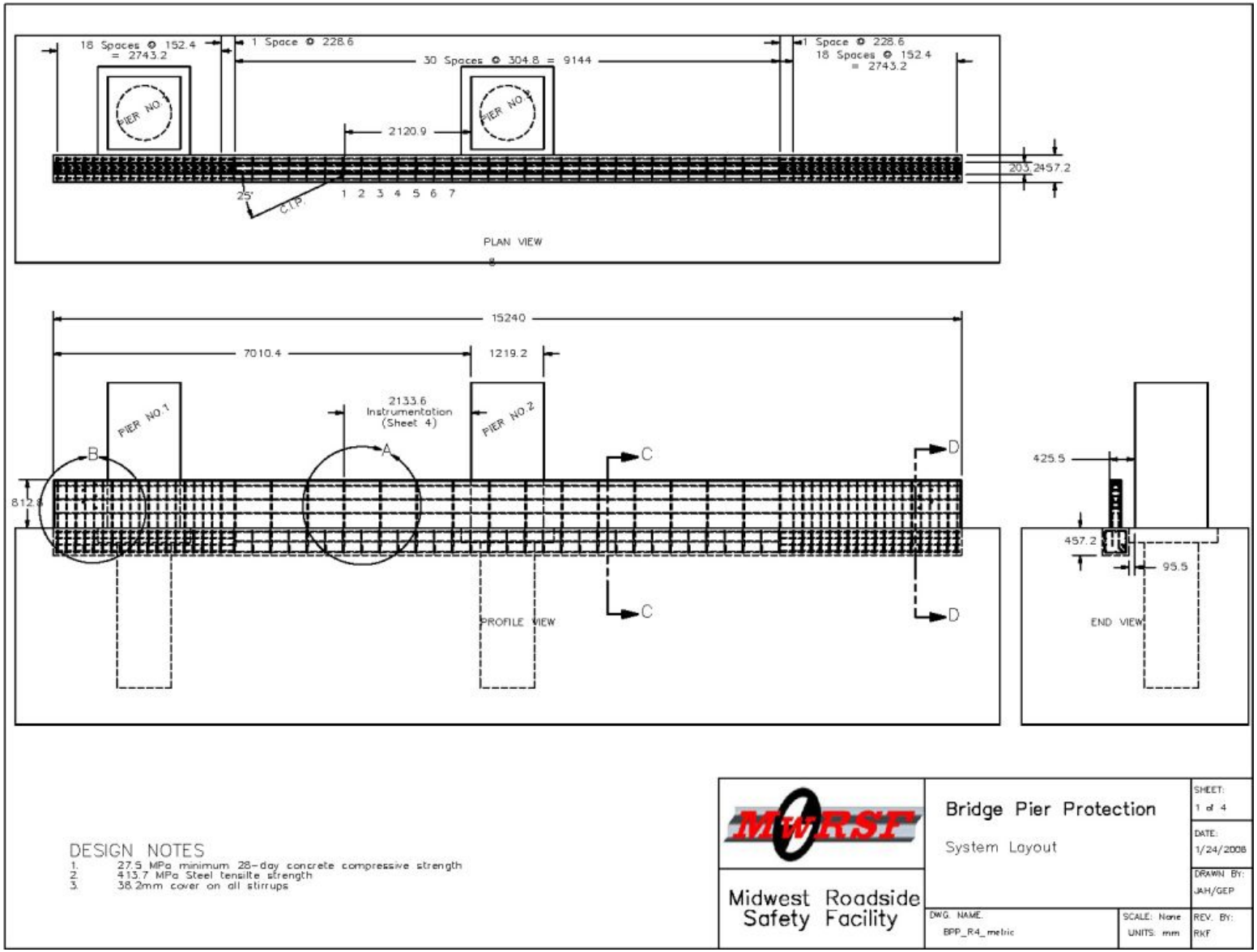


**Figure 1. Test Installation Layout, Test CBPP-1**

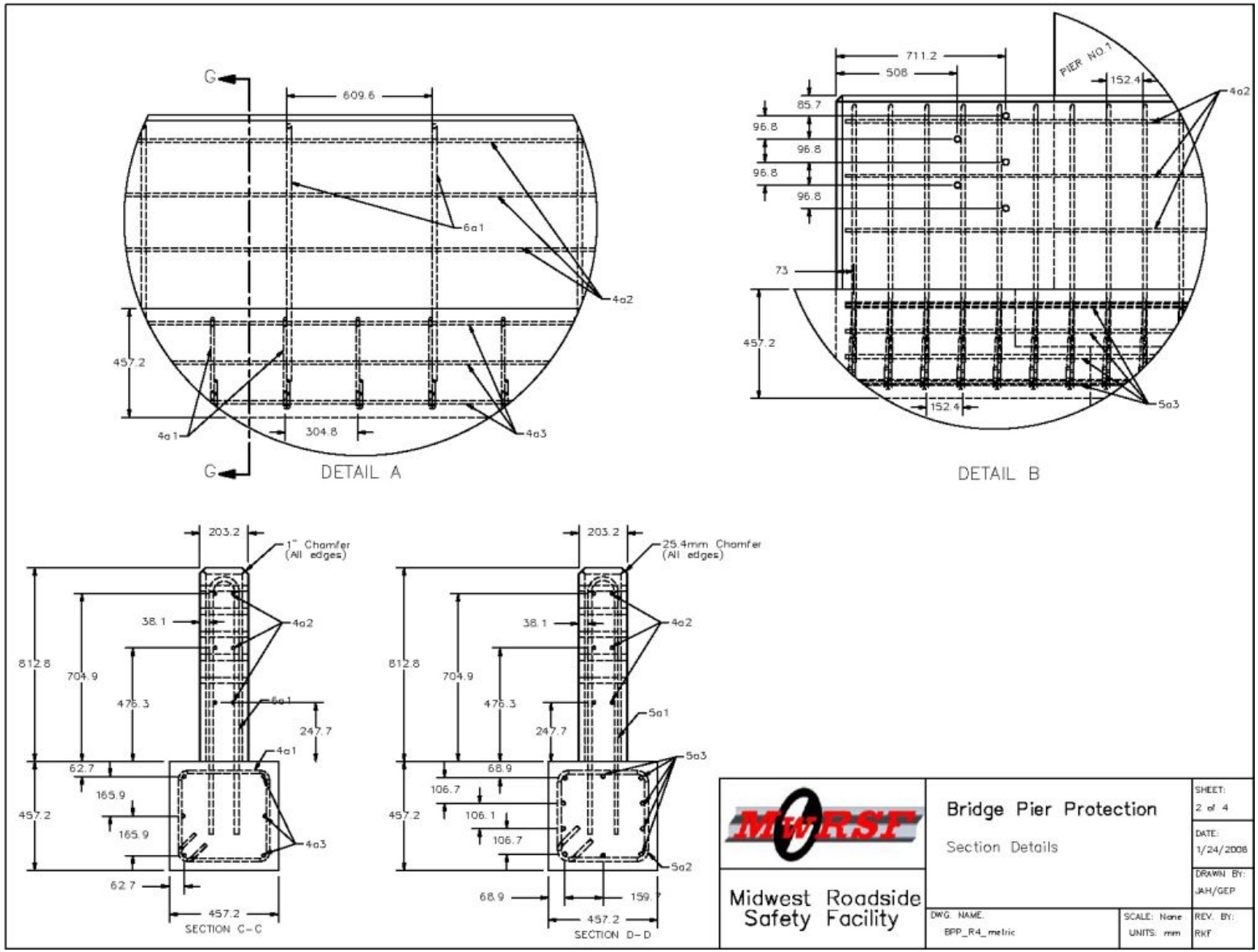


**Figure 2. Design Details and Reinforcement Placement, Test CBPP-1**

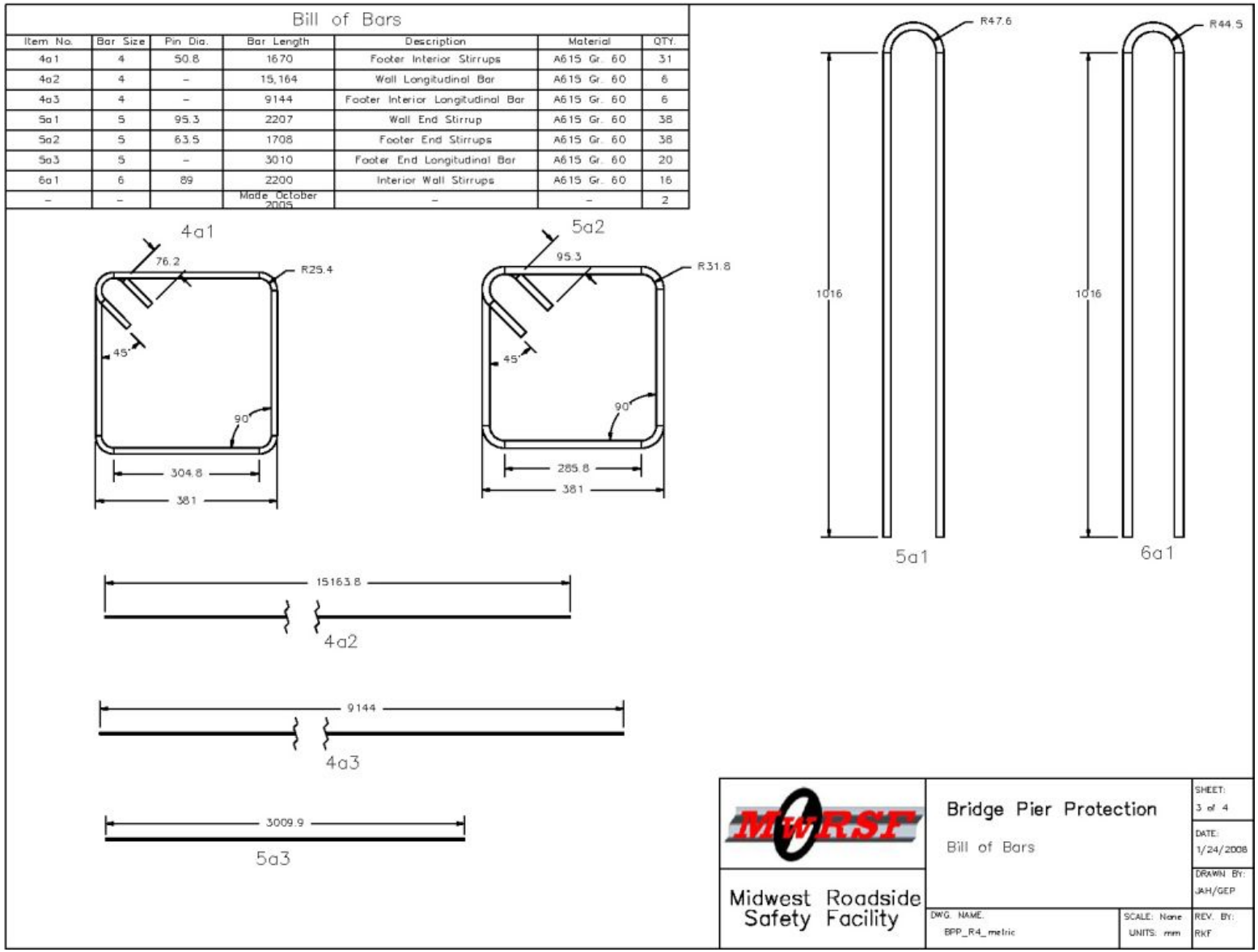


| Item No. | Bar Size | Pin Dia. | Bar Length | Description | Material | QTY. |
|---|---|---|---|---|---|---|
| 4a1 | 4 | 50.8 | 1670 | Footer Interior Stirrups | A615 Gr. 60 | 31 |
| 4a2 | 4 | – | 15,164 | Wall Longitudinal Bar | A615 Gr. 60 | 6 |
| 4a3 | 4 | – | 9144 | Footer Interior Longitudinal Bar | A615 Gr. 60 | 6 |
| 5a1 | 5 | 95.3 | 2207 | Wall End Stirrup | A615 Gr. 60 | 38 |
| 5a2 | 5 | 63.5 | 1708 | Footer End Stirrups | A615 Gr. 60 | 38 |
| 5a3 | 5 | – | 3010 | Footer End Longitudinal Bar | A615 Gr. 60 | 20 |
| 6a1 | 6 | 89 | 2200 | Interior Wall Stirrups | A615 Gr. 60 | 16 |
| – | – | | Made October 2005 | – | – | 2 |

**Figure 3. Internal Steel Reinforcement Dimensions, Test CBPP-1**

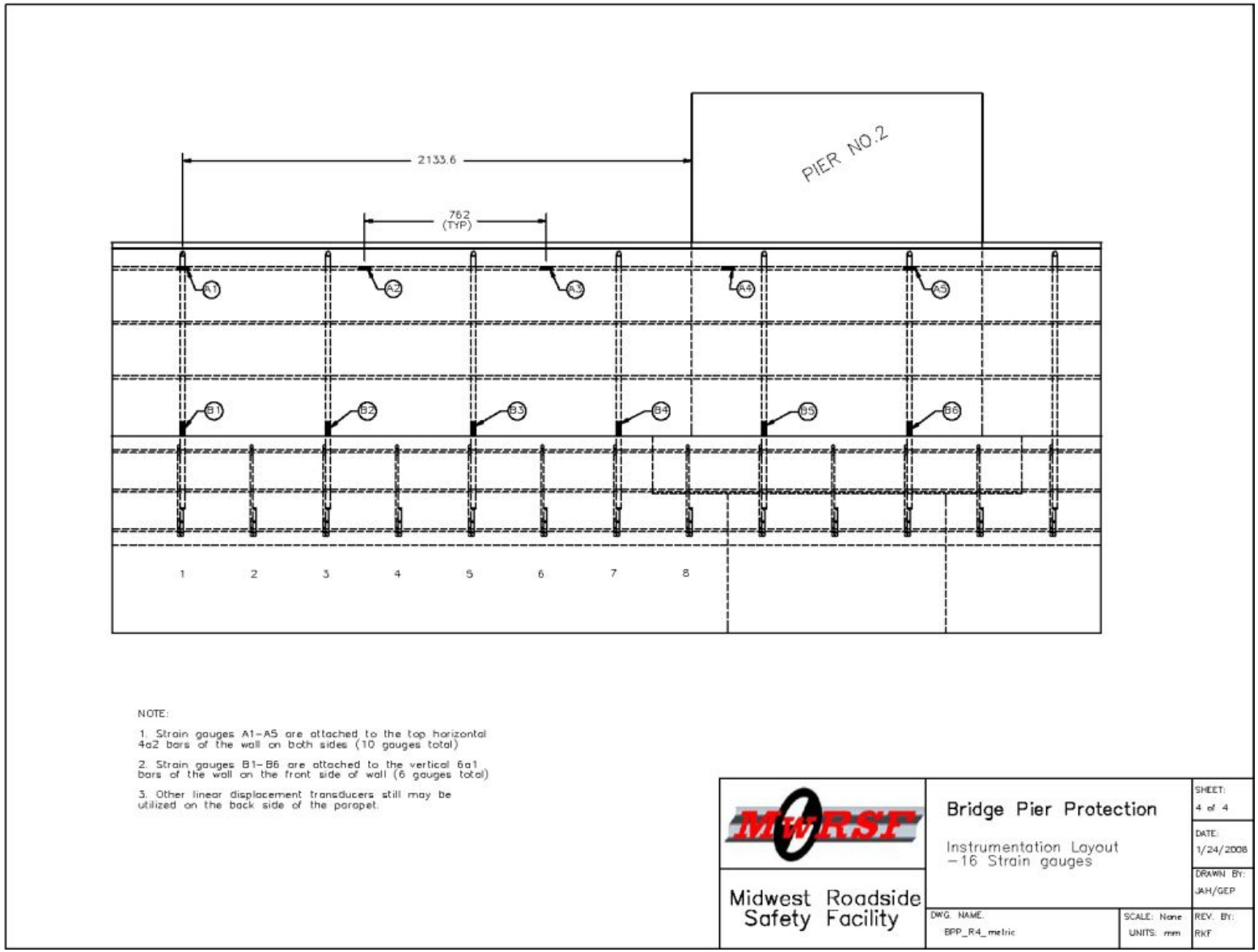


**Figure 4. Location of Strain Gauges, Test CBPP-1**

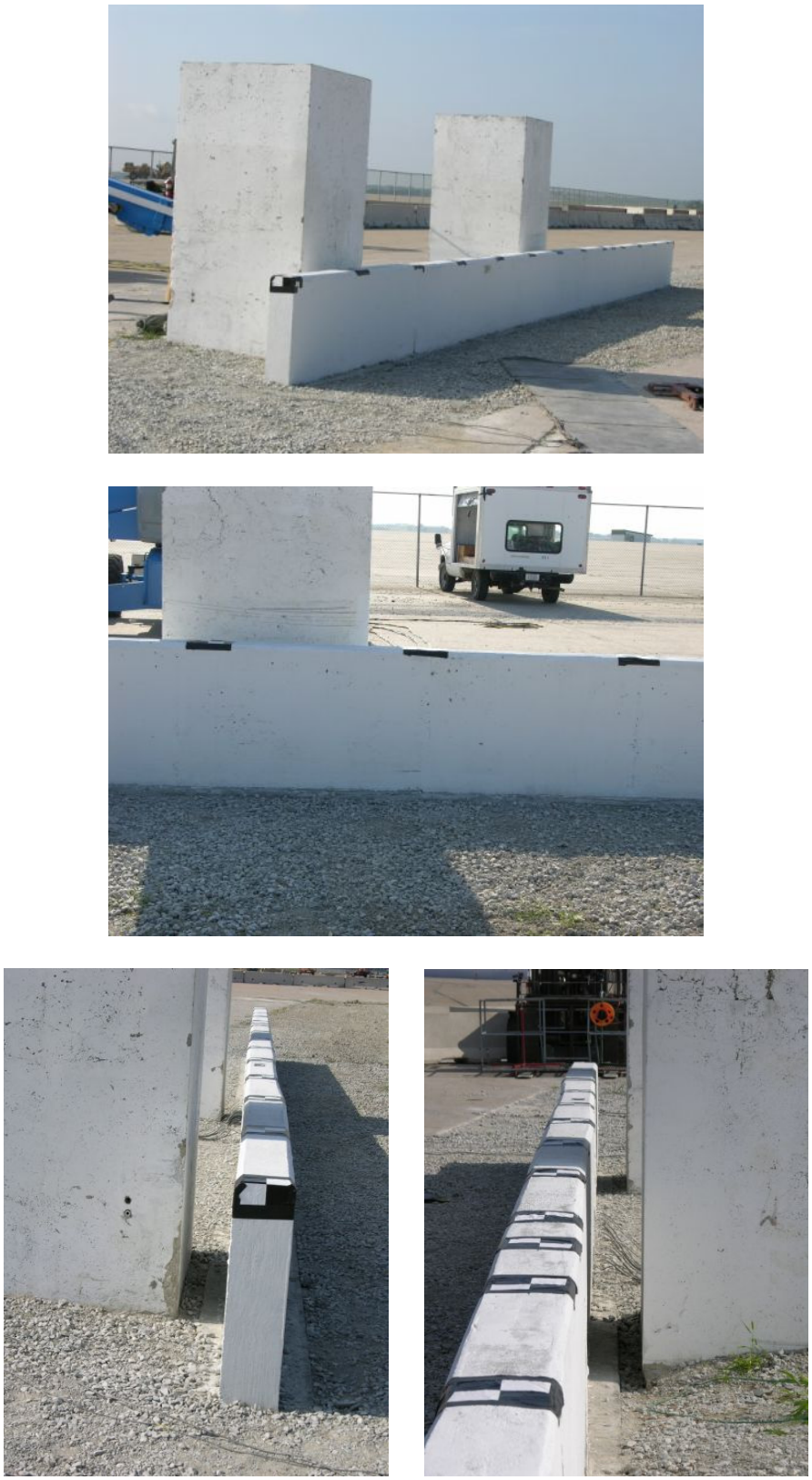

**Figure 5. Barrier Test Installation, Test CBPP-1**

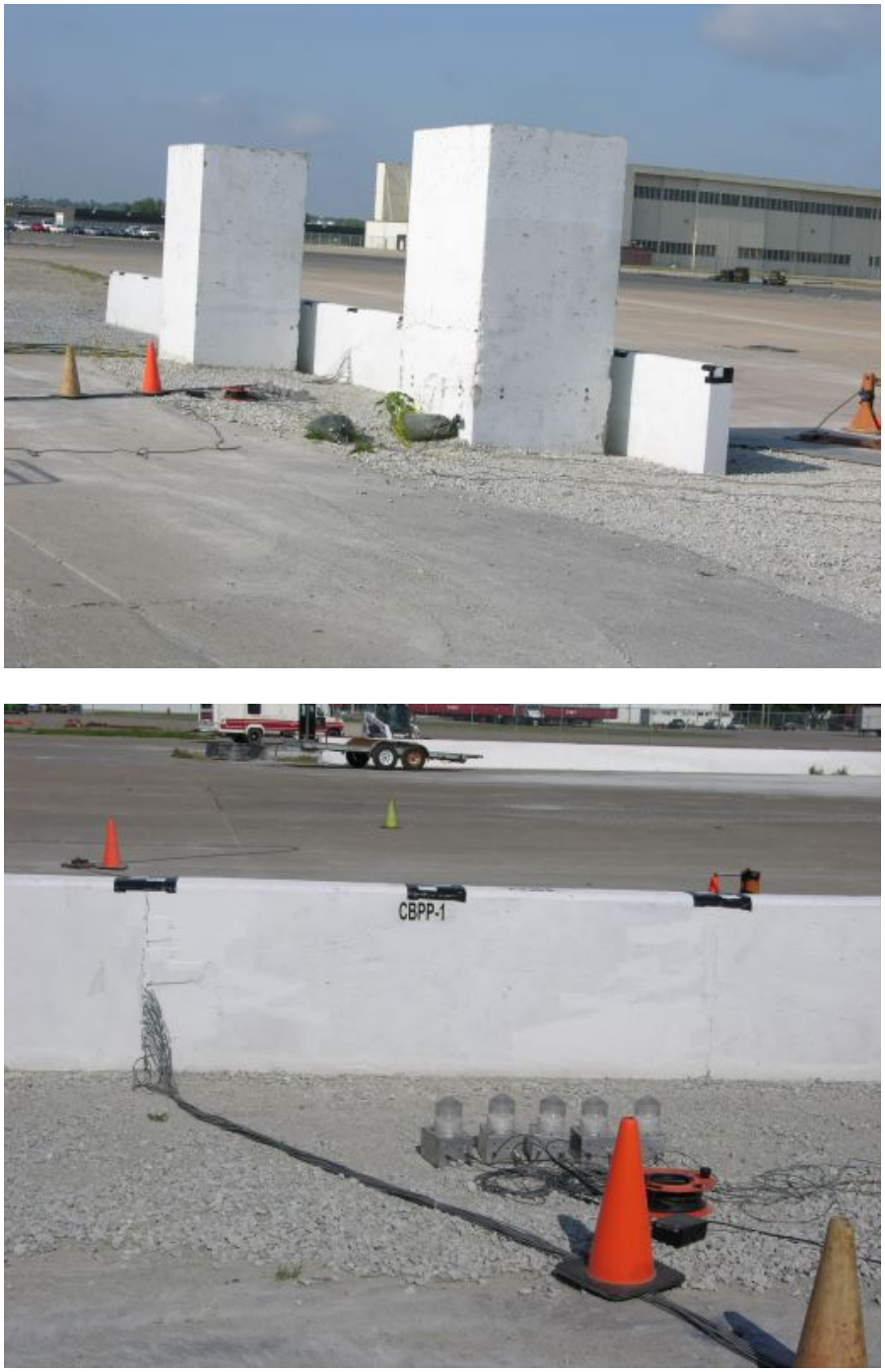


**Figure 6. Backside Test Installation and Strain Gauge Wires, Test CBPP-1**

# 5 TEST REQUIREMENTS AND EVALUATION CRITERIA

## 5.1 Test Requirements

Historically, longitudinal barriers, such as reinforced concrete systems, have been required to satisfy impact safety standards in order to be accepted by the Federal Highway Administration (FHWA) for use on National Highway System (NHS) construction projects or as a replacement for existing designs not meeting current safety standards. In recent years, these safety standards have consisted of the guidelines and procedures published in NCHRP Report No. 350 [2]. Therefore, according to TL-3 of the NCHRP Report No. 350, longitudinal barrier systems must be subjected to two full-scale vehicle crash tests. The two full-scale crash tests are as follows:

I. Test Designation 3-10 consisting of an 820-kg (1,808-lb) small car impacting the longitudinal barrier system at a nominal speed and angle of 100.0 km/h (62.1 mph) and 20 degrees, respectively.

II. Test Designation 3-11 consisting of a 2,000-kg (4,409-lb) pickup truck impacting the longitudinal barrier system at a nominal speed and angle of 100.0 km/h (62.1 mph) and 25 degrees, respectively.

Although the small car test is used to evaluate the performance of the length-of-need section and occupant risk problems arising from snagging or overturning of the vehicle, this test was deemed unnecessary based on previous testing of vertical concrete barrier systems. Both the Texas Transportation Institute (TTI) and MwRSF have successfully conducted tests corresponding to test designation 3-10 on 813-mm (32-in.) tall, vertical faced concrete barriers [12 - 13]. Also, these previous full-scale crash tests showed no evidence of vehicle components extending over the barrier creating the possibility of striking and/or snagging on fixed objects

behind the barrier, such as bridge piers. Since the proposed test barrier has a 813-mm (32-in.) vertical face, the small car crash test, test designation 3-10, was considered unnecessary for this project.

The test conditions of TL-3 longitudinal barriers are summarized in Table 6.

**Table 6. NCHRP Report No. 350 Test Level 3 Crash Test Conditions**

| Test Article | Barrier Section | Test Designation | Test Vehicle | Impact Conditions | | | Evaluation Criteria [1] |
|---|---|---|---|---|---|---|---|
| | | | | Speed | | Angle (deg.) | |
| | | | | km/h | mph | | |
| Longitudinal Barrier | Length of Need | 3-10 | 820C | 100 | 62.1 | 20 | A,D,F,H,I,K,M |
| | Length of Need | 3-11 | 2000P | 100 | 62.1 | 25 | A,D,F,K,L,M |

[1] Evaluation criteria explained in Table 7.

### 5.2 Evaluation Criteria

Evaluation criteria for full-scale vehicle crash testing are based on three appraisal areas: (1) structural adequacy; (2) occupant risk; and (3) vehicle trajectory after collision. Criteria for structural adequacy are intended to evaluate the ability of the bridge railing to contain, and redirect impacting vehicles. Occupant risk evaluates the degree of hazard to occupants in the impacting vehicle. Vehicle trajectory after collision is a measure of the potential for the post-impact trajectory of the vehicle to become involved in secondary collisions with other vehicles or fixed objects. These three evaluation criteria are summarized in Table 7 and defined in greater detail in NCHRP Report No. 350.. The full-scale vehicle crash test was conducted and reported in accordance with the procedures provided in NCHRP Report No. 350.

**Table 7. NCHRP Report No. 350 Evaluation Criteria for Crash Testing**

| | | |
|---|---|---|
| Structural Adequacy | A. | Test article should contain and redirect the vehicle; the vehicle should not penetrate, underride, or override the installation although controlled lateral deflection of the test article is acceptable. |
| Occupant Risk | D. | Detached elements, fragments or other debris from the test article should not penetrate or show potential for penetrating the occupant compartment, or present an undue hazard to other traffic, pedestrians, or personnel in a work zone. Deformations of, or intrusions into, the occupant compartment that could cause serious injuries should not be permitted. |
| | F. | The vehicle should remain upright during and after collision although moderate roll, pitching, and yawing are acceptable. |
| | H. | Longitudinal and lateral occupant impact velocities should fall below the preferred value of 9 m/s (29.53 ft/s), or at least below the maximum allowable value of 12 m/s (39.37 ft/s). |
| | I. | Longitudinal and lateral occupant ridedown accelerations should fall below the preferred value of 15 g's, or at least below the maximum allowable value of 20 g's. |
| Vehicle Trajectory | K. | After collision it is preferable that the vehicle's trajectory not intrude into adjacent traffic lanes. |
| | L. | The occupant impact velocity in the longitudinal direction should not exceed 12 m/s (39.37 ft/s), and the occupant ridedown acceleration in the longitudinal direction should not exceed 20 g's. |
| | M. | The exit angle from the test article preferably should be less than 60 percent of test impact angle measured at time of vehicle loss of contact with test device. |

# 6 TEST CONDITIONS

## 6.1 Test Facility

The testing facility is located at the Lincoln Air Park on the northwest side of the Lincoln Municipal Airport and is approximately 8.0 km (5 miles) northwest of the University of Nebraska-Lincoln.

## 6.2 Vehicle Tow and Guidance System

A reverse cable tow system with a 1:2 mechanical advantage was used to propel the test vehicle. The distance traveled and the speed of the tow vehicle were one-half that of the test vehicle. The test vehicle was released from the tow cable before impact with the barrier system. A digital speedometer on the tow vehicle increases the accuracy of the test vehicle impact speed.

A vehicle guidance system developed by Hinch [14] was used to steer the test vehicle. A guide-flag, attached to the front-left wheel and the guide cable, was sheared off before impact with the barrier system. The 9.5-mm (0.375-in.) diameter guide cable was tensioned to approximately 15.6 kN (3,500 lbf) and supported both laterally and vertically every 30.48 m (100 ft) by hinged stanchions. The hinged stanchions stood upright while holding up the guide cable, but as the vehicle was towed down the line, the guide-flag struck and knocked each stanchion to the ground. For test CBPP-1, the vehicle guidance system was 244 m (800 ft) long.

## 6.3 Test Vehicles

For test CBPP-1, a 1999 Chevrolet C2500 3/4–ton pickup truck was used as the test vehicle. The test inertial and gross static weights were both 2,015 kg (4,442 lbs). The test vehicle is shown in Figure 7, and vehicle dimensions are shown in Figure 8.

**Figure 7. Test Vehicle, Test No. CBPP-1**

| | | | | | |
|---|---|---|---|---|---|
| Date: | 7/2/2007 | Test Number: | CBPP-1 | Model: | 2000p/C2500 |
| Make: | Chevrolet | Vehicle I.D.#: | 1GCGC24R6XR705921 | | |
| Tire Size: | LT245/75 R16 | Year: | 1999 | Odometer: | 156271 |

*(All Measurements Refer to Impacting Side)

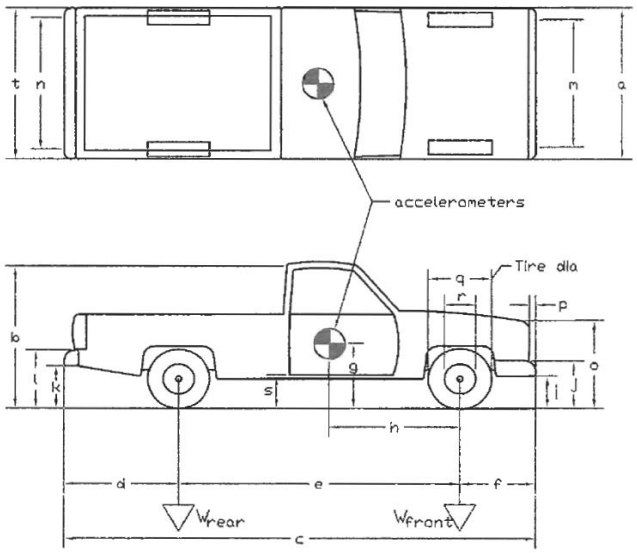


Vehicle Geometry -- mm (in.)

| | | | | | |
|---|---|---|---|---|---|
| a | 1886 | (74.25) | b | 1847.9 | (72.75) |
| c | 5543.6 | (218.25) | d | 1320.8 | (52.0) |
| e | 3359.2 | (132.25) | f | 863.6 | (34.0) |
| g | 666.75 | (26.25) | h | 1413.8 | (55.66) |
| i | 444.5 | (17.5) | j | 654.05 | (25.75) |
| k | 590.55 | (23.25) | l | 774.7 | (30.5) |
| m | 1587.5 | (62.5) | n | 1625.6 | (64.0) |
| o | 1016 | (40.0) | p | 63.5 | (2.5) |
| q | 749.3 | (29.5) | r | 444.5 | (17.5) |
| s | 444.5 | (17.5) | t | 1847.9 | (72.75) |

| | | |
|---|---|---|
| Wheel Center Height Front | 368.3 | (14.5) |
| Wheel Center Height Rear | 368.3 | (14.5) |
| Wheel Well Clearance (FR) | 882.65 | (34.75) |
| Wheel Well Clearance (RR) | 952.5 | (37.5) |
| Frame Height (FR) | 406.4 | (16.0) |
| Frame Height (RR) | 669.93 | (26.375) |
| Engine Type | 8 CYL. GAS | |
| Engine Size | 5.7L | |
| Transmition Type: | Automatic | |
| | RWD | |

| GVWR | | |
|---|---|---|
| | F | 4100 |
| | R | 6000 |
| | Tot. | 8600 |

| Weights kg (lbs) | Curb | | Test Inertial | | Gross Static | |
|---|---|---|---|---|---|---|
| W-front | 1208.8 | (2665) | 1166.6 | (2572) | 1166.6 | (2572) |
| W-rear | 889.04 | (1960) | 848.22 | (1870) | 848.22 | (1870) |
| W-total | 2097.9 | (4625) | 2014.9 | (4442) | 2014.9 | (4442) |

Note any damage prior to test: None

**Figure 8. Vehicle Dimensions, Test No. CBPP-1**

The Suspension Method [15] was used to determine the vertical component of the center of gravity (c.g.) for the pickup trucks. This method is based on the principle that the c.g. of any freely suspended body is in the vertical plane through the point of suspension. The vehicle was suspended successively in three positions, and the respective planes containing the c.g. were established. The intersection of these planes pinpointed the location of the c.g. The longitudinal component of the c.g. was determined using the measured axle weights. The locations of the final centers of gravity are shown in Figures 8 and 9.

Square black and white-checkered targets were placed on the vehicle to aid in the analysis of the high-speed VITcam videos, as shown in Figure 9. Round, checkered targets were placed on the center of gravity, on the left-side door, on the right-side door, and on the roof of the vehicle. The remaining targets were located for references so that they could be viewed from the high-speed cameras for video analysis.

The front wheels of the test vehicle were aligned for camber, caster, and toe-in values of zero so that the vehicles would track properly along the guide cable. A 5B flash bulb was mounted on the left-side of the vehicle's dash to pinpoint the time of impact with the barrier system on the high-speed VITcam videos. The flash bulb was fired by a pressure tape switch mounted on the front face of the bumper. A remote controlled brake system was installed in the test vehicle so the vehicle could be brought safely to a stop after the test.

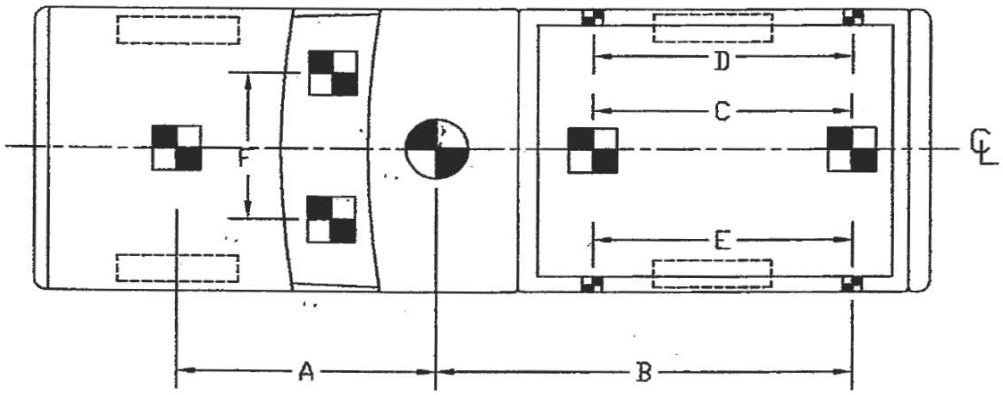


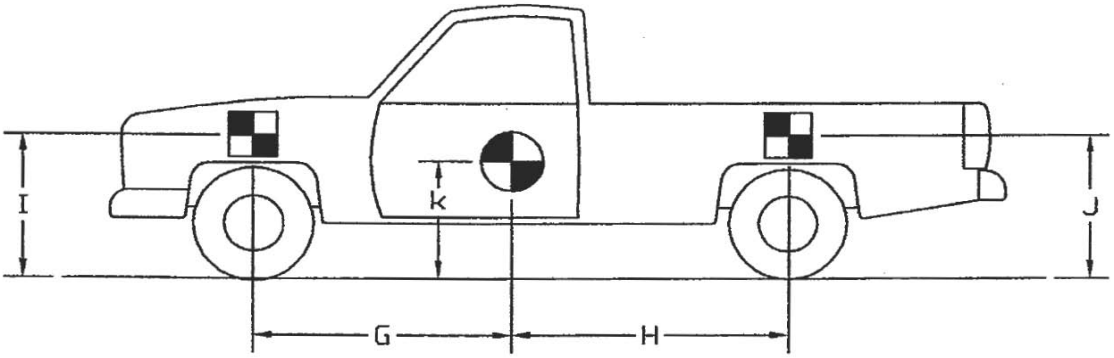


TEST #: CBPP-1

TARGET GEOMETRY-- mm (in.)

| | | | | | | | | |
|---|---|---|---|---|---|---|---|---|
| A | 1600 | (63.0) | E | 2153 | (84.75) | I | 1003 | (39.5) |
| B | 2496 | (98.25) | F | 1003 | (39.5) | J | 1048 | (41.25) |
| C | 1410 | (55.5) | G | 1439 | (56.66) | K | 667 | (26.25) |
| D | 2153 | (84.75) | H | 1946 | (76.6) | | | |

**Figure 9. Target Geometry, Test No. CBPP-1**

## 6.4 Data Acquisition Systems

### 6.4.1 Accelerometers

Two triaxial piezoresistive accelerometer systems, described below, were used to measure the acceleration in the longitudinal, lateral, and vertical directions.

Principle EDR:

Model EDR-4M6 – Instrumented Sensor Technology (IST) of Okemos, MI

± 200 g's

10,000 Hz Sample Rate

3 Differential Channels, 3 Single-Ended Channels

6 MB RAM Memory

1,500 Hz lowpass filter

Secondary EDR:

Model EDR-3 – Instrumented Sensor Technology (IST) of Okemos, MI

± 200 g's

3,200 Hz Sample Rate

256 kB RAM Memory

1,120 Hz lowpass filter

The EDR accelerometers were mounted near the center of gravity of the test vehicle. "DynaMax 1 (DM-1)" and "DADiSP" computer software programs were used to analyze and plot the accelerometer data.

### 6.4.2 Rate Transducers

An Analog Systems 3-axis rate transducer with a range of 1,200 degrees/sec in each of the three directions (pitch, roll, and yaw) was used to measure the rates of motion of the test vehicle. The rate transducer was mounted inside the body of the EDR-4M6 and recorded data at 10,000 Hz to a second data acquisition board inside the EDR-4M6 housing. The raw data measurements were then downloaded, converted to the appropriate Euler angles for analysis, and plotted. Microsoft Excel software was used to analyze and plot the rate transducer data.

### 6.4.3 Pressure Tape Switches

For test no. CBPP-1, five pressure-activated tape switches, spaced at 2-m (6.56-ft) intervals, were used to determine the speed of the vehicle before impact. Each tape switch fired a strobe light which sent an electronic timing signal to the data acquisition system as the left-front tire of the test vehicle passed over it. Test vehicle speeds were determined from electronic timing mark data recorded using TestPoint software. Strobe lights and high-speed video analysis are used only as a backup in the event that vehicle speeds cannot be determined from the electronic data.

### 6.4.4 High Speed Photography

Four high-speed AOS VITcam digital video cameras, five JVC digital video cameras, and two Canon digital video cameras were utilized to film test no. CBPP-1. Camera details, lens information, and camera operating speeds are shown in Table 8. A schematic of the camera locations is shown in Figure 10. The VITcam videos were analyzed using ImageExpress MotionPlus software. Camera speed and camera divergence factors were considered in the analysis of the high-speed videos.

**Table 8. Camera and Lens Information, Test No. CBPP-1**

| | No. | Type | Operating Speed (frames/sec) | Lens | Lens Setting |
|---|---|---|---|---|---|
| High-Speed Video | 1 | AOS Vitcam CTM | 500 | 12.5 mm fixed | |
| | 2 | AOS Vitcam CTM | 500 | Sigma 24-70 | 50 |
| | 3 | AOS Vitcam CTM | 500 | Sigma 24-135 | 24 |
| | 4 | AOS Vitcam CTM | 500 | Sigma 70-200 | 200 |
| Digital Video | 1 | JVC Digital Video | 29.97 | | |
| | 2 | JVC Digital Video | 29.97 | | |
| | 3 | JVC Digital Video | 29.97 | | |
| | 4 | JVC Digital Video | 29.97 | | |
| | 5 | JVC Digital Video | 29.97 | | |
| | 7 | Canon-ZR90 | 29.97 | | |
| | 8 | Canon-ZR90 | 29.97 | | |

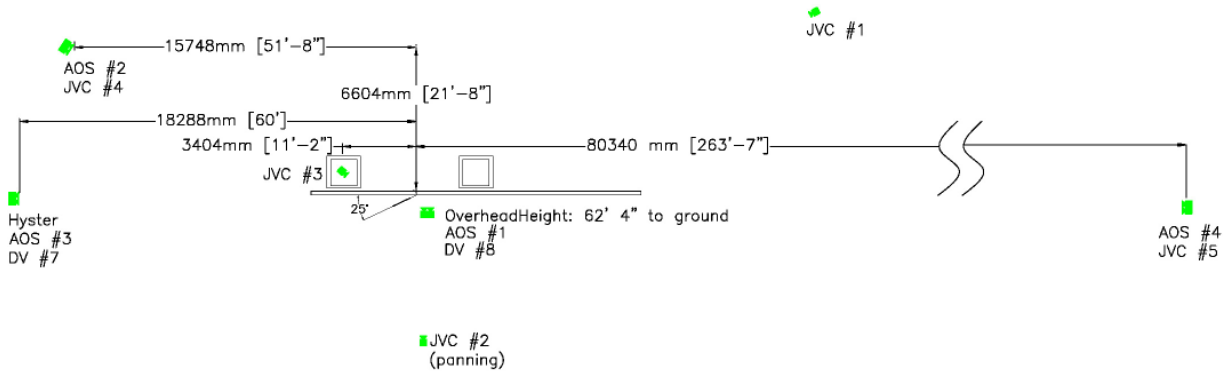


**Figure 10. Camera Locations, Test No. CBPP-1**

### 6.4.5 Strain Gauges

For test CBPP-1, sixteen strain gauges were installed on the internal reinforcing steel of the concrete parapet. These LWK-Series Weldable Strain Gauges (type no. LWK-06-W250B-350) were manufactured by Vishay Micro-Measurements and were installed by spot welding the units directly to the steel rebar surface. These gauges had a temperature range between -320 degrees and 500 degrees Fahrenheit (-195 to 260 degrees Celsius) and a strain limit of ±0.5% at room temperature. Ten gauges were installed on both the front and back longitudinal rebar at the top of the barrier at 762 mm (30 in.) intervals beginning at the impact point, while the remaining six gauges were placed on the front side of the vertical steel throughout the same barrier region, as shown in Figure 4.

# 7 FULL SCALE CRASH TEST NO. CBPP-1

## 7.1 Test CBPP-1

The 2,015-kg (4,442-lb) pickup truck impacted the concrete bridge pier protection barrier at a speed of 104.3 km/h (64.8 mph) and at an angle of 25.9 degrees. A summary of the test results and sequential photographs are shown in Figure 11. The summary of the test results and sequential photographs in English units are shown in Appendix D. Additional sequential photographs are shown in Figures 12 through 14. Documentary photographs of the crash test are shown in Figure 15.

## 7.2 Test Description

Initial vehicle impact was to occur 2,121 mm (83.5 in.) upstream of pier number two, as shown in Figure 16. The actual point of impact was 25 mm (1 in.) downstream of the targeted impact point, or 2,096 mm (82.5 in.) upstream of pier number two. At 0.008 sec, the left-front corner of the hood protruded over the front face of the barrier, and at 0.012 sec, the left-front tire contacted the barrier. At 0.028 sec, the left-side door began to deform, and the top separated from the cab. By 0.034 sec, the vehicle was rolling toward the barrier. At 0.070 sec, the left-front corner of the hood contacted pier number two and began to fold downward. At 0.088 sec, the right-front tire left the ground due to vehicle roll. By 0.112 sec, the hood latch disengaged, and the hood began to deform upward. At 0.118 sec, the left-side mirror contacted pier number two. At 0.140 sec, the right-rear tire left the ground. At 0.180 sec, the left-rear tire impacted the barrier, and by 0.194 sec, the left-rear corner of the bumper was riding along the top of the barrier. At 0.196 sec, the vehicle became parallel with the barrier at a speed of 84.2 km/h (52.3 mph). The vehicle yawed away from and rolled toward the barrier as it continued to ride down the barrier's face until the vehicle exited the system at a speed of 79.9 km/h (49.7 mph) and an

angle of 16.4 degrees at 0.540 sec. At 0.576 sec, the left-front bumper contacted the ground and caused the vehicle to reverse its roll. By 0.836 sec, the right-rear tire separated from the wheel, and at 0.950 sec, the left-rear tire returned to the ground. At 1.264 sec, the right-front tire was back on the ground. The pickup truck came to rest 43.9 m (144 ft) downstream from impact and 5.5 m (18 ft - 2 in.) laterally away from the traffic-side of the barrier. The trajectory and final position of the pickup are shown in Figure 17.

**7.3 Barrier Damage**

Damage to the barrier was minimal, as shown in Figures 18 through 22. The damage consisted of concrete cracks, spalling and gouging, and contact marks. All of the cracks found on the barrier were no wider than 2 mm (1/16 in.). Cracks on the front face of the barrier were diagonal and resembled the predicted yield line failure shape used for the structural analysis described in Chapter 3. The distance between the upstream cracks and the downstream cracks was 4,039 mm (159 in.) on the top of the barrier and 1,956 mm (77 in.) near the base of the barrier. The cracks on the back side of the barrier were nearly vertical and were located between the diagonal cracks on the front side of the barrier. All barrier cracks shown in Figures 20 and 21 were colored red to make them more visible. Any black lines represented cracks formed in the barrier during curing.

Contact marks were found on the barrier's front face, beginning 25 mm (1 in.) downstream of the initial targeted impact point and extending 3,378 mm (133 in.) downstream. Contact marks were also found on the front face of the bridge pier. Minor spalling was found along the front-top corner of the barrier, beginning 216 mm (8.5 in.) downstream of impact and extending 2,083 mm (82 in.) downstream. Also, a 216-mm (8.5-in.) long gouge mark was found

halfway up the barrier face 203 mm (8 in.) downstream of impact. These contact marks and instances of spalling and gouging are shown in Figure 19.

Finally, a minor soil gap was found along the base of the barrier on the front side. The gap measured approximately 3 mm (0.125 in.) wide and extended through the area of impact. This gap is shown in Figure 22. The maximum dynamic deflection was 26 mm (1 in.) and the permanent set was negligible. The working width was found to be 504 mm (19.8 in.)

**7.4 Vehicle Damage**

The damage to the vehicle was moderate, as shown in Figures 23 through 29. The most severe damage was located at the left-front region of the vehicle, as shown in Figure 24. The left-front corner of the vehicle was crushed inward toward the engine with the bumper buckling near the center. The left-front headlight disengaged, and the left-front tire was disengaged from the rim. Both the lower control arm and the anti-roll bar were also disengaged from the left-front wheel assembly.

Gouges, indentations, and scratches were found along the entire left side of the vehicle, as shown in Figure 25. Two gouges were found on the lower portion of the left-side door, each measuring about 25 mm (1 in.) wide. A major indentation, measuring 102 mm (4 in.) deep, was found directly in front of the left-rear wheel well. The top of the left-side door was separated from the rest of the cab, as shown in Figure 26, and the left-rear tire was deflated.

As shown in Figure 27, the engine hood was dented and buckled. Localized damage in the form of folding and scrapes was found on the left-front corner of the hood from contact between the hood and the pier. The front of the hood was disengaged from the vehicle, and the hood was buckled near the windshield. Cracks were found in the windshield spreading from the left-lower corner to the top and middle.

Occupant compartment deformations to the left side and center of the floorboard, as shown in Figure 28, were judged insufficient to cause serious injury to the vehicle occupants. A maximum longitudinal deformation of 83 mm (3.25 in.) was located near the left-front side of the floorboard. A maximum lateral deflection of 133 mm (5.25 in.) was located along the left side of the floorboard. A maximum vertical deflection of 89 mm (3.5 in.) was located near the center of the floorboard. Deformations were recorded from two separate reference points before and after the test. Complete occupant compartment deformations and the corresponding locations are provided in Appendix E.

The rear of the vehicle received minimal exterior damage. As shown in Figure 29, the tailgate became detached from the right side of the pickup truck bed. The left-side face of the rear bumper had a 76 mm (3 in.) indentation, and the entire left side of the rear bumper was detached from the truck. Finally, the entire pickup truck bed was shifted 25 mm (1 in.) toward the left side of the cab.

**7.5 Occupant Risk**

The longitudinal and lateral occupant impact velocities were determined to be 6.52 m/s (21.4 ft/s) and 7.74 m/s (25.4 ft/s), respectively. The maximum 0.010-sec average occupant ridedown accelerations in the longitudinal and lateral directions were 6.97 g's and 9.66 g's, respectively. It is noted that the occupant impact velocities (OIVs) and occupant ridedown decelerations (ORDs) were within the suggested limits provided in NCHRP Report No. 350. The results of the occupant risk, as determined from the accelerometer data, are summarized in Figure 11. The recorded data from both the accelerometers and the rate transducer are shown graphically in Appendix F.

### 7.6 Resultant Impact Force Calculation

Data from both the accelerometers and the rate gyro was combined in order to estimate the magnitude of the impact load perpendicular to the barrier. A CFC 60 filtered, 50-millisecond average was computed for the lateral and longitudinal acceleration data. This averaged acceleration, which is in reference to the vehicle axis, was translated to reflect the barrier lateral and longitudinal axis by factoring in the yaw angle of the vehicle at each point. These accelerations were then multiplied by the weight of the vehicle to get the longitudinal and lateral forces acting on the barrier as a function of time, as shown in Figure 30. The maximum lateral impact force was calculated to be approximately 306.2 kN (68.8 kips).

### 7.7 Discussion

The analysis of the test results for test no. CBPP-1 showed that the concrete pier protection barrier adequately contained and redirected the vehicle without significant permanent displacements of the barrier. There were no detached elements nor fragments which showed potential for penetrating the occupant compartment nor presented undue hazard to other traffic. The deformation of, or intrusion into, the occupant compartment was minimal and did not pose a threat to cause serious injury. The test vehicle did not penetrate nor ride over the barrier and remained upright during and after the collision. Vehicle roll, pitch, and yaw angular displacements were noted, as shown in Appendix F, and were deemed acceptable because they did not adversely influence occupant risk safety criteria nor cause rollover. After impact, the vehicle exited the barrier at an angle of 6.6 degrees, which is less than 60 percent of the impact angle, and did not intrude into adjacent traffic lanes. The minor snagging of the engine hood on the bridge pier was not critical because the engine hood remained attached to the vehicle and did not penetrate the windshield nor enter the occupant compartment. Therefore, test CBPP-1

conducted on an 813-mm (32-in.) tall, vertical-shaped, concrete barrier was determined to be acceptable according to the TL-3 safety performance criteria found in NCHRP Report No. 350.

0.000 sec

0.072 sec

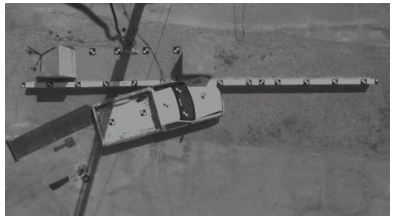

0.116 sec

0.196 sec

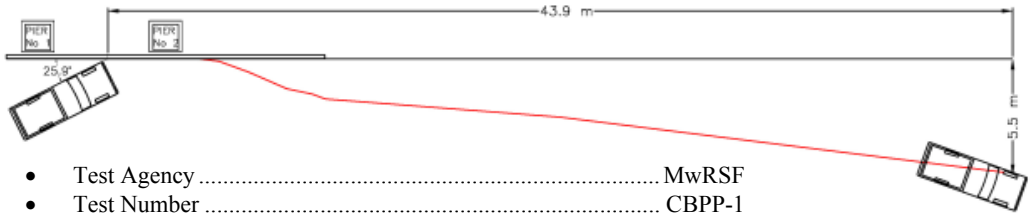


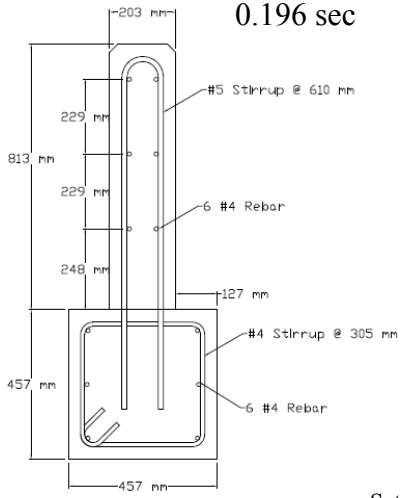


- Test Agency ..... MwRSF
- Test Number ..... CBPP-1
- Date ..... 7/3/07
- NCHRP Report 350 Test Designation..... 3-11
- Test Article ..... Concrete Pier Protection Barrier
- Concrete Material..... Nebraska L4000 mix
- Reinforcing Steel Material ..... Grade 60 Rebar
- Concrete Barrier
  - Length ..... 15.24 m
  - Width ..... 203 mm
  - Height ..... 813 mm
- Concrete Footing
  - Length ..... 15.24 m
  - Width ..... 457 mm
  - Depth ..... 457 mm
- Vehicle Make and Model ..... 1999 Chevrolet C2500 Pickup
  - Curb ..... 2,098 kg
  - Test Inertial ..... 2,015 kg
  - Gross Static ..... 2,015 kg
- Impact Conditions
  - Speed ..... 104.3 km/h
  - Angle ..... 25.9 deg
  - Impact Location ..... 4.9 m from Upstream End
- Exit Conditions
  - Speed ..... 79.9 km/h
  - Angle ..... 6.6 deg
- Vehicle Stability ..... Satisfactory
- Occupant Ridedown Deceleration (10 msec avg.)
  - Longitudinal ..... 6.97 g's
  - Lateral ..... 9.66 g's
- Occupant Impact Velocity
  - Longitudinal ..... 6.52 m/s
  - Lateral ..... 7.74 m/s
- Vehicle Damage ..... Moderate
  - VDS[16] ..... 11-FL-5 and 11-RD-4
  - CDC[17] ..... 11-FLEN3 and 11-LDES2
- Vehicle Stopping Distance..... 44 m DS of impact, 5.5 m Laterally
- Test Article Damage ..... Minimal
- Test Article Deflections
  - Permanent Set ..... NA
  - Dynamic ..... 26 mm
  - Working Width ..... 504 mm

**Figure 11. Summary of Test Results and Sequential Photographs, Test CBPP-1**

**Figure 12. Additional Sequential Photographs, Test CBPP-1**

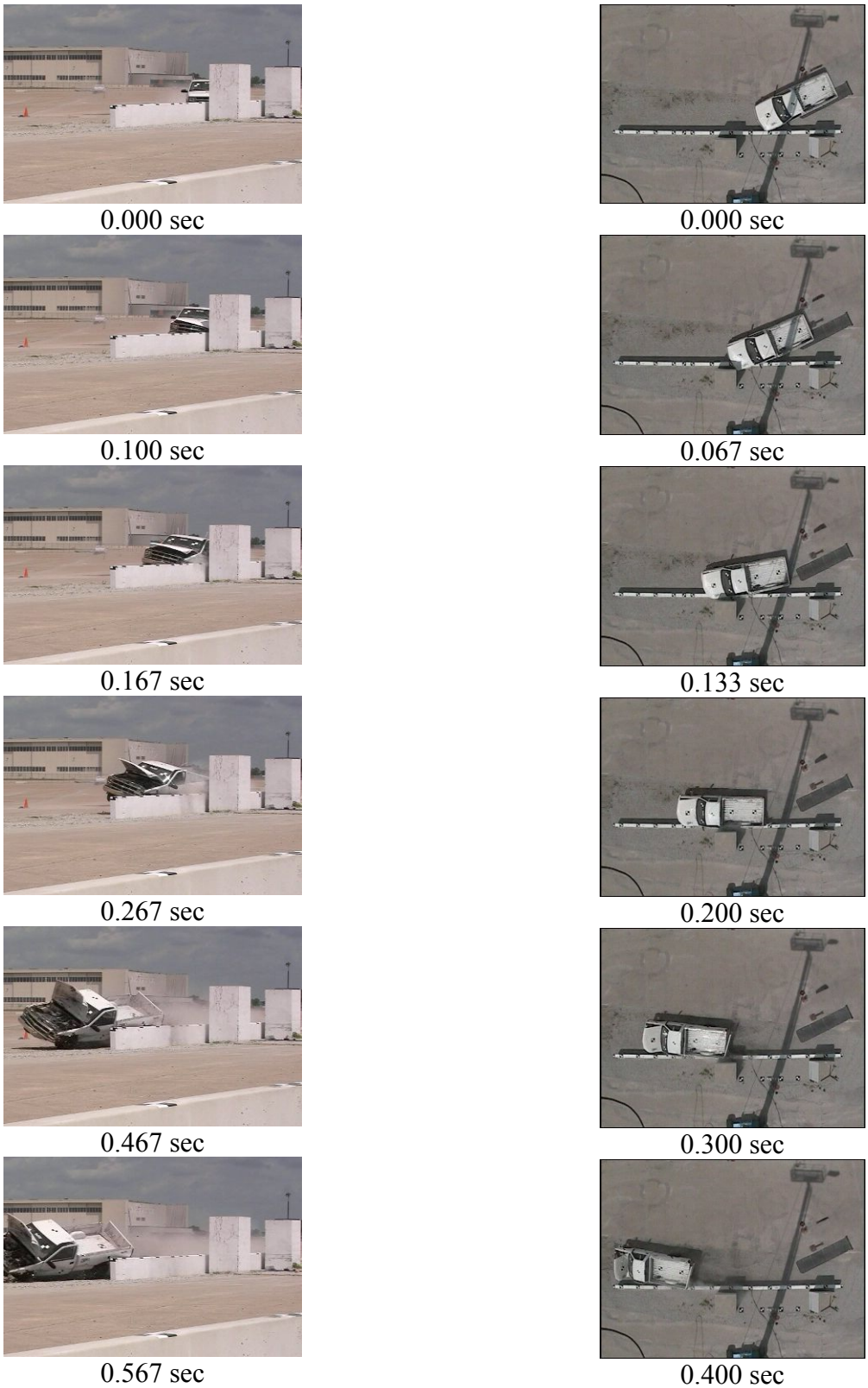


**Figure 13. Additional Sequential Photographs, Test CBPP-1**

0.000 sec

0.100 sec

0.033 sec

0.133 sec

0.067 sec

0.200 sec

**Figure 14. Additional Sequential Photographs, Test CBPP-1**

**Figure 15. Documentary Photographs, Test CBPP-1**

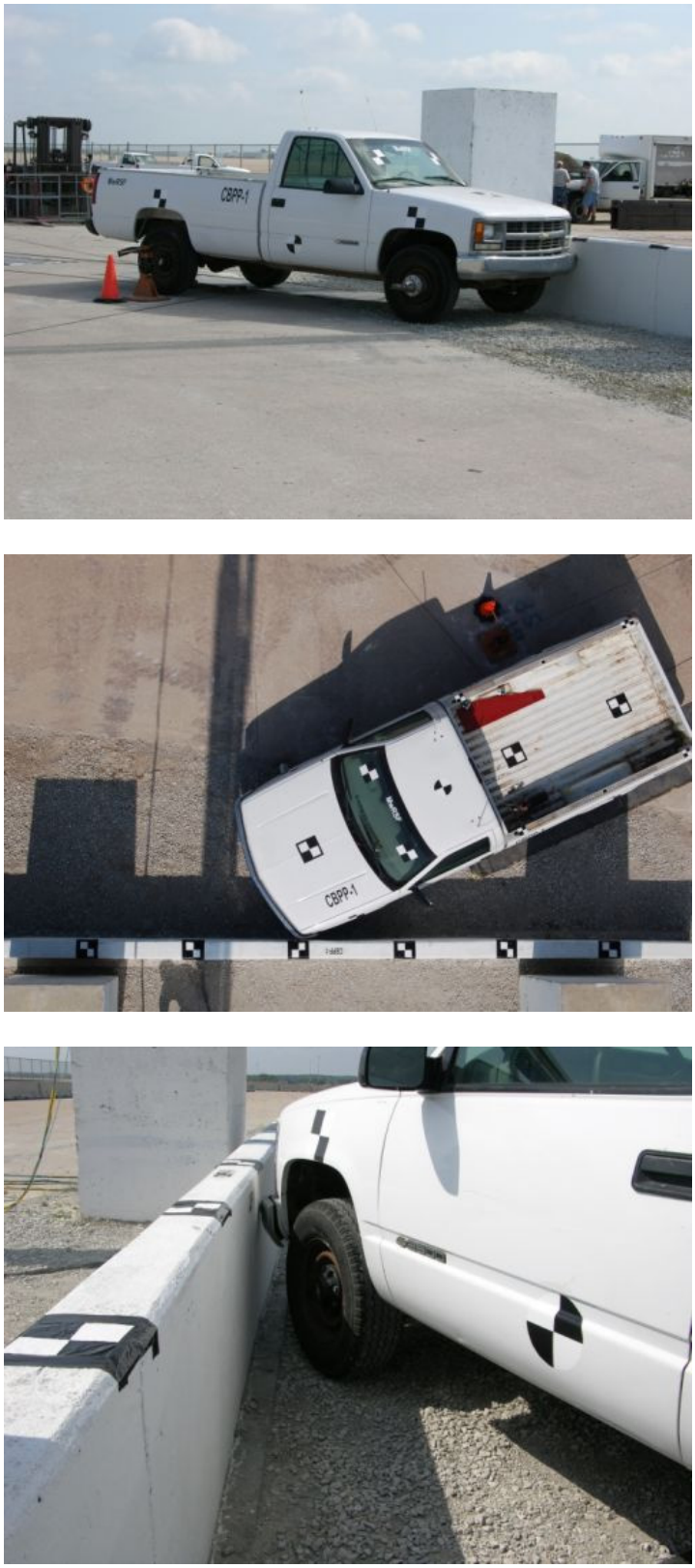


**Figure 16. Impact Location, Test CBPP-1**

**Figure 17. Vehicle Final Position and Trajectory Marks, Test CBPP-1**

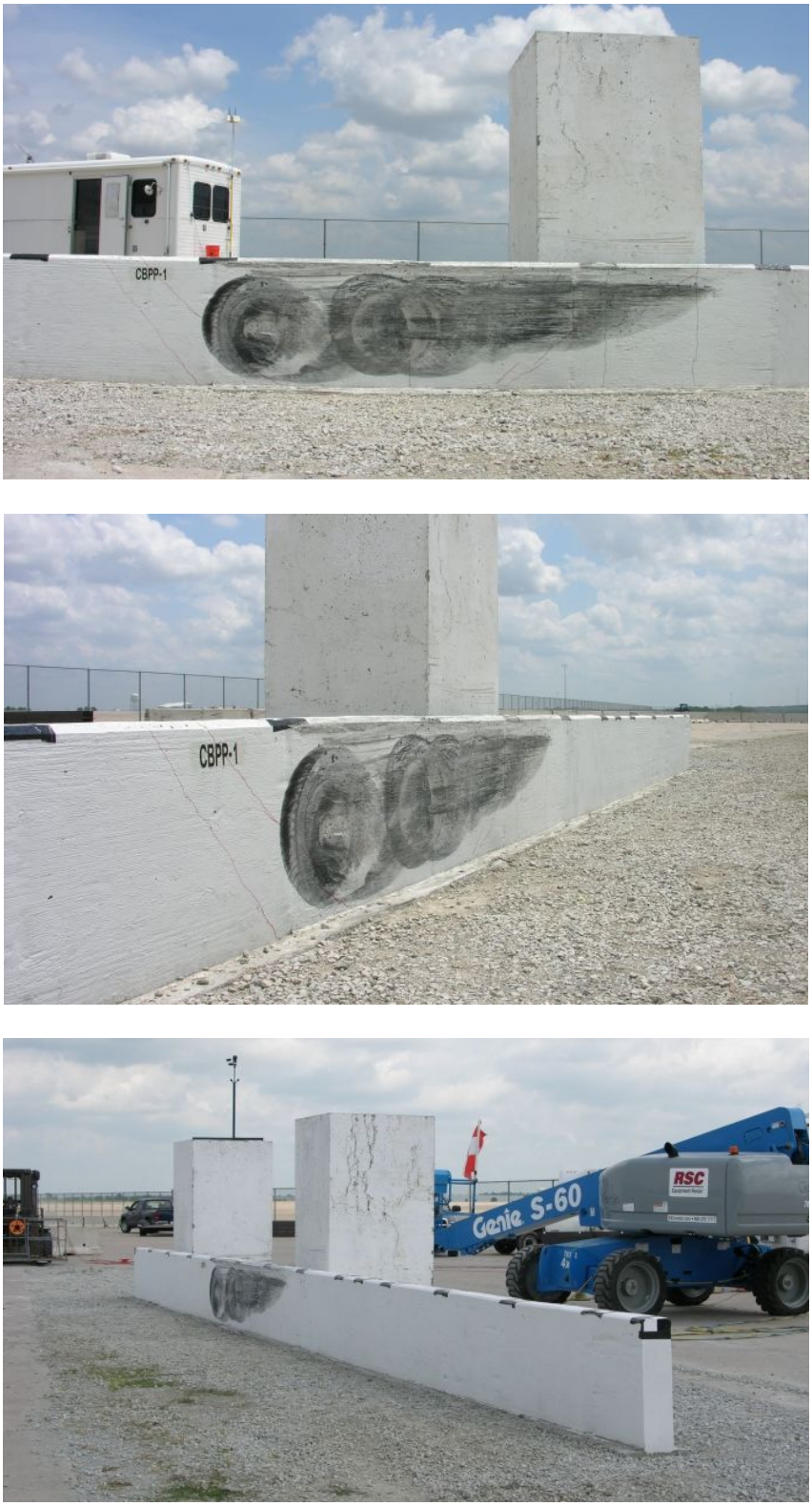


**Figure 18. System Damage, Test CBPP-1**

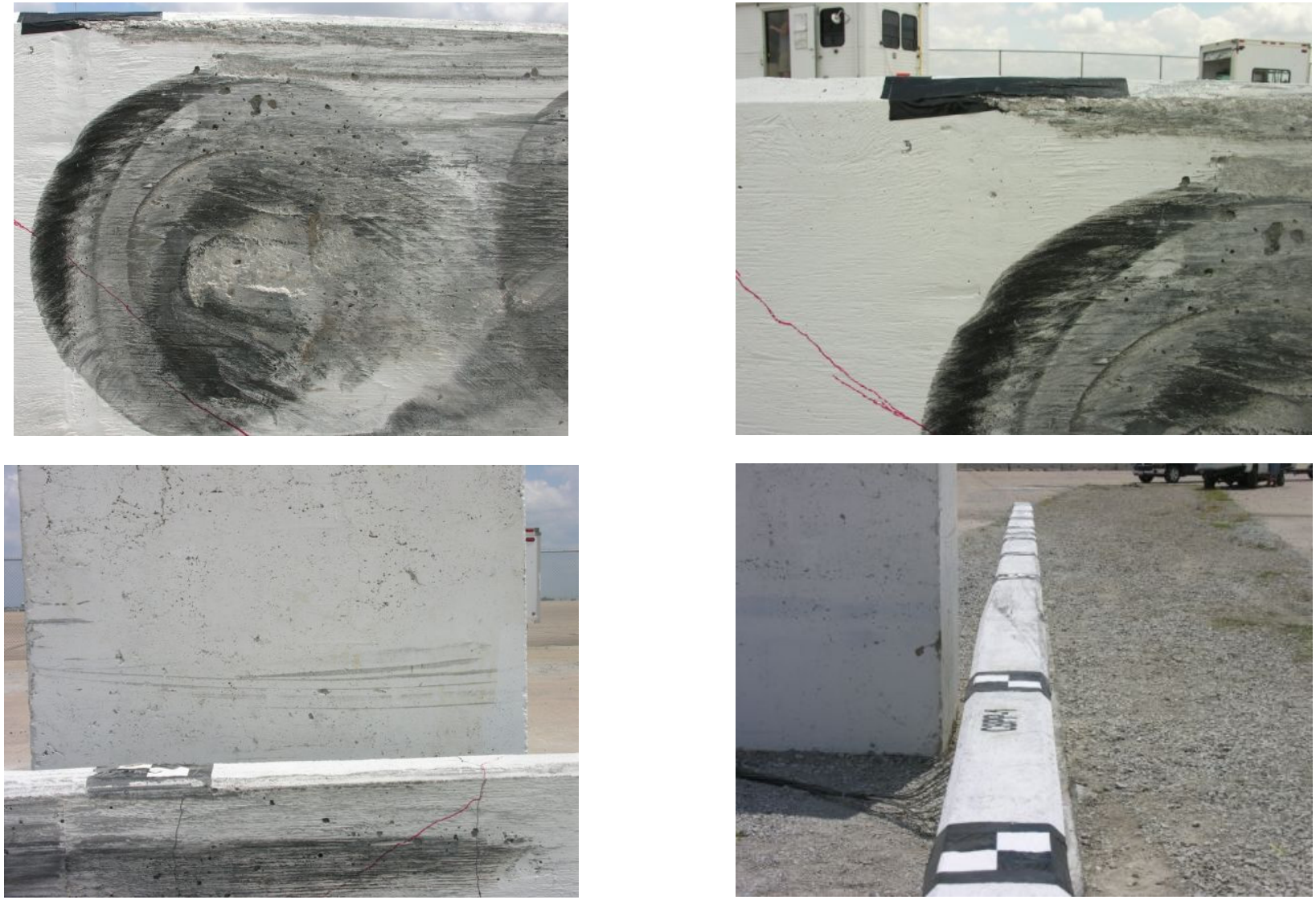

**Figure 19. System Damage, Contact Marks and Gouging, Test CBPP-1**

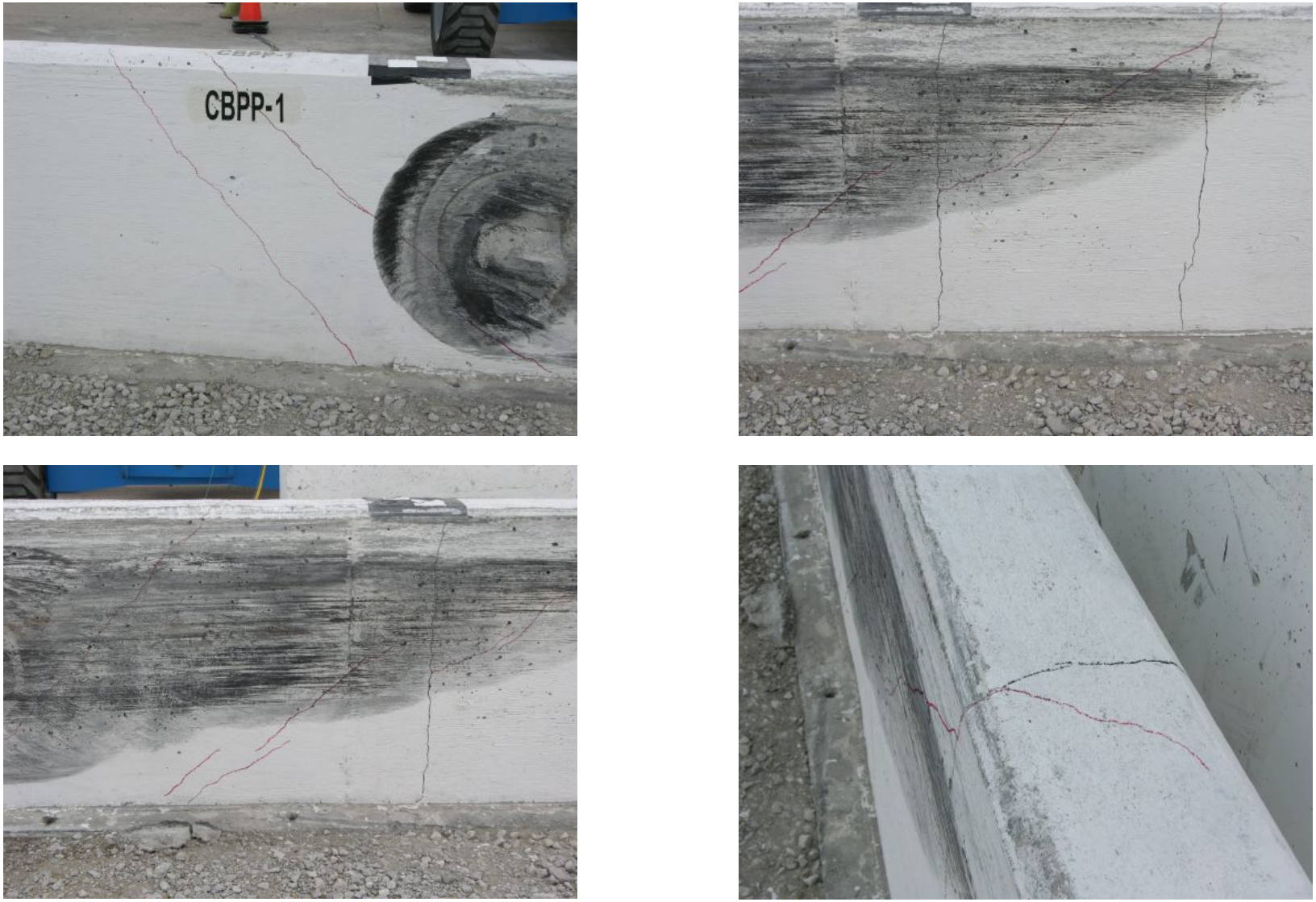


**Figure 20. System Damage, Front Side Concrete Cracks, Test CBPP-1**

**Figure 21. System Damage, Back Side Concrete Cracks, Test CBPP-1**

**Figure 22. System Damage, Soil Gap, Test CBPP-1**

**Figure 23. Vehicle Damage, Test CBPP-1**

**Figure 24. Vehicle Damage, Left-Front Wheel, Test CBPP-1**

**Figure 25. Vehicle Damage, Left Side, Test CBPP-1**

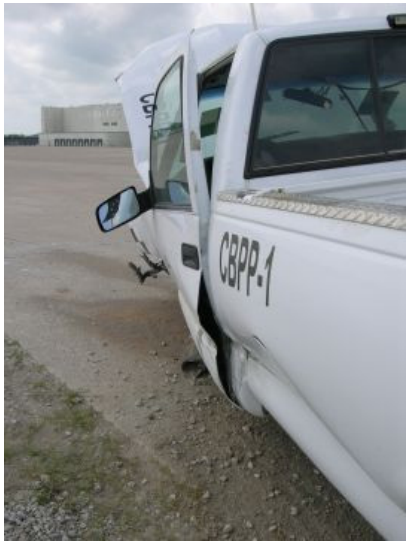

**Figure 26. Vehicle Damage, Left Side, Test CBPP-1**

**Figure 27. Vehicle Damage, Hood and Windshield, Test CBPP-1**

**Figure 28. Vehicle Damage, Occupant Compartment, Test CBPP-1**

**Figure 29. Vehicle Damage, Rear of Vehicle, Test CBPP-1**

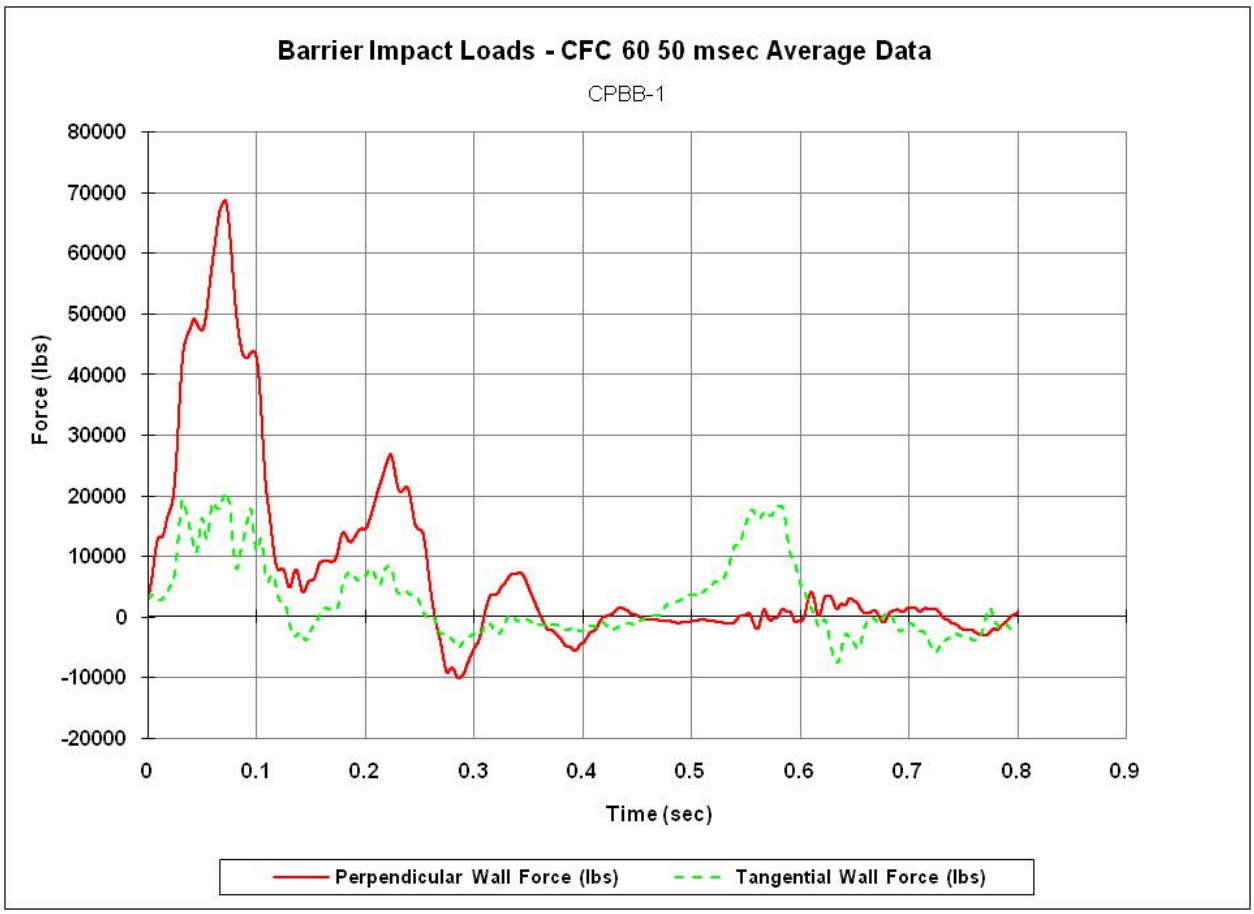


**Figure 30. Lateral and Longitudinal Impact Forces vs. Time, Test CBPP-1**

# 8 STRAIN GAUGE ANALYSIS

In preparation for crash test CBPP-1, a total of sixteen strain gauges were installed on the steel reinforcement within the concrete barrier. However, during the test, technical difficulties were encountered, thus resulting in no discernable data being collected from the strain gauges located on the longitudinal reinforcement. Data was collected and analyzed from the remaining six gauges which were located on the front legs of the vertical stirrups in the barrier and throughout the impact region, as noted in Figure 4 of Chapter 4. This data is shown graphically in Figure 31 and each strain gauge is shown independently in Appendix G.

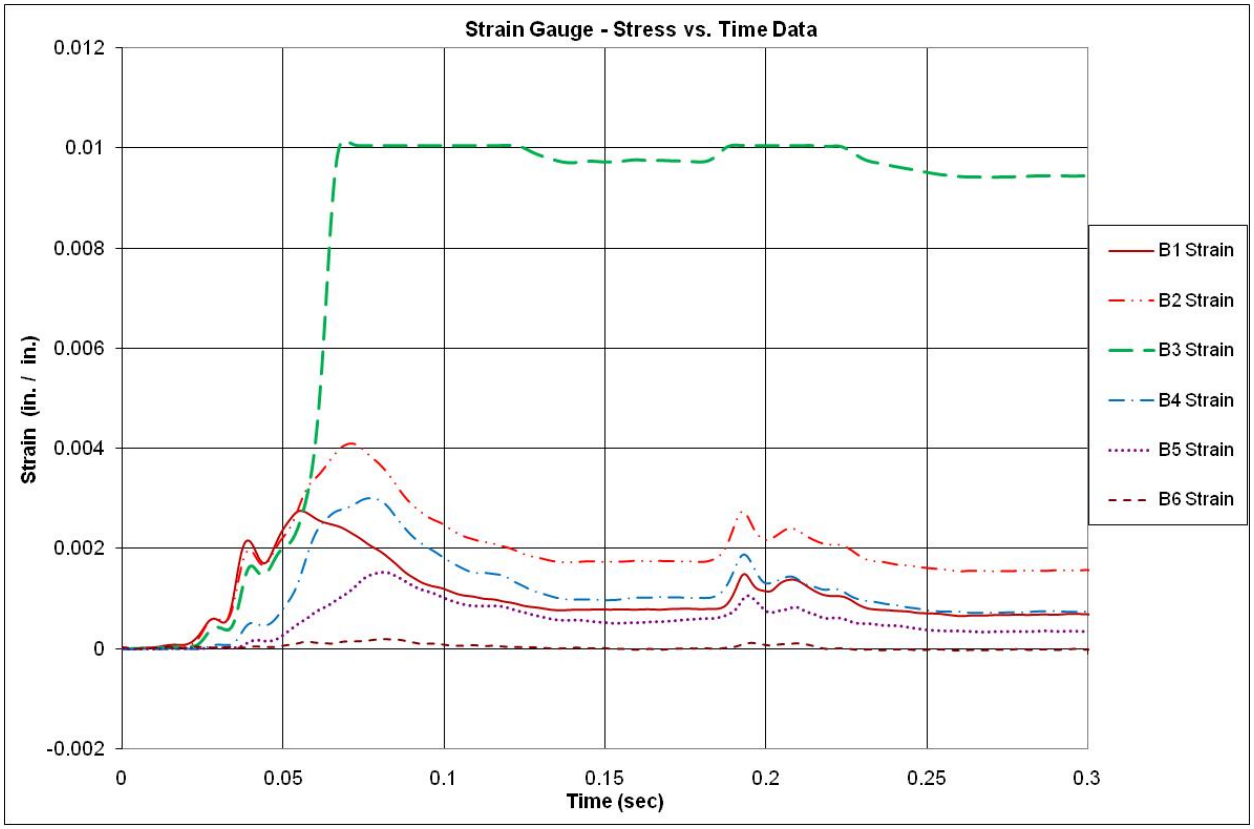


**Figure 31. Strain vs. Time Data From Strain Gauge Results**

The calculated stresses were limited to 414 MPa (60 ksi), at which point the rebar would hypothetically have begun to yield and where the linear-elastic relation between stress and strain no longer applied. Solving the more complex, plastic relation between stress and strain was

considered unnecessary since all of the design calculations were based on the yield-line capacity of barrier using minimum yield strength. With the absence of data from the longitudinal rebars, a more complete analysis of the load imparted to the barrier could not be preformed. The resulting stress levels in the vertical bars are shown in Figure 32.

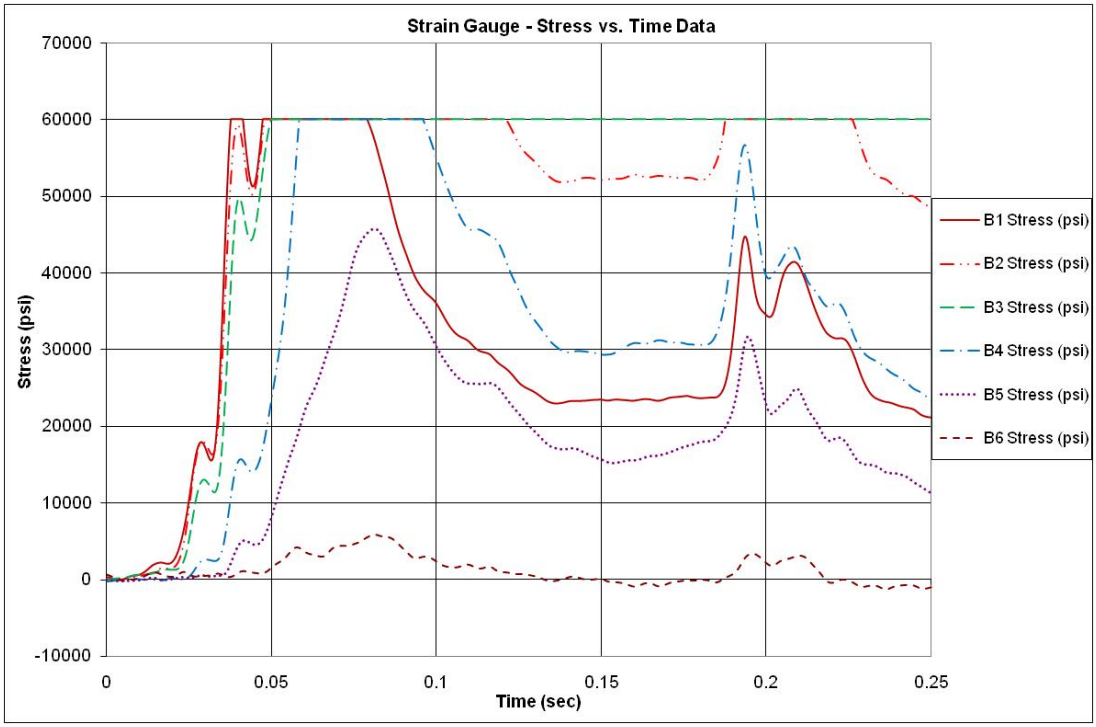


**Figure 32. Stress vs. Time Data From Strain Gauge Results**

Strain gauge B3, which was located in the middle of the impact region, recorded the most deformation as it was the only gauge to bottom out. Thus, the stirrup at this location observed the highest strain. The recorded strains from the rest of the gauges decreased with an increased distance away from gauge B3. This fact was evident in Figure 32 by observing strains in gauges B2 and B4, which observed the next highest strains, followed by readings at gauges B1, B5, and finally B6. The time that the peak loading was observed from the strain gauge data, approximately 0.050 sec after impact, matched the time corresponding to the peak lateral impact

load determined from the vehicle accelerometers. Further, the vehicle was positioned in front of strain gauge B3 at 0.050 sec after impact, as shown in Figure 33.

It is also interesting to note that the second stress spike is a result of the back end of the pickup contacting the barrier. As shown in Figure 33, the tail end of the pickup contacts the barrier slightly before 0.200 seconds. This second spike did not create resultant impact forces greater in magnitude as those associated with the vehicle redirection at 0.050 seconds, but it is a noteworthy event.

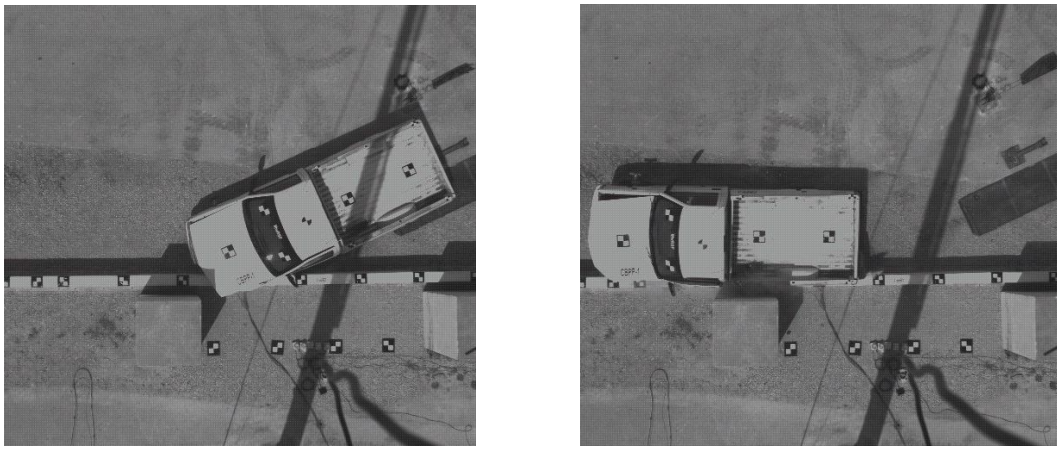

(a) (b)

**Figure 33. Vehicle Position at (a) 0.050 Seconds and (b) 0.200 Seconds After Impact**

Finally, the yielding of the stirrup bars at the base of the barrier indicated that a substantial overturning moment was necessary to resist the impact forces applied to the barrier's front face. During the design process, this moment was called the barrier's cantilever moment, or $M_c$, and it was relied upon in the yield line equations to contribute to the barrier's overall redirective capacity. This cantilever moment was also used as the design loading for the reinforced concrete footing. From the strain gauge data, it was realized these loads were indeed transferred to the barrier footing, which later helped to justify the design methodology used for designing the foundation system.

# 9 SUMMARY, CONCLUSIONS, AND RECCOMENDATIONS

This study set out to design and examine the safety performance of a stand-alone, reinforced concrete barrier and foundation system for use in protecting motorists from bridge pier impacts. The barrier needed to satisfy the TL-3 safety performance evaluation criteria found in NCHRP Report No. 350 while also preventing damage to bridge piers.

In order to maximize passenger vehicle stability during impacts, a vertical face was selected for the barrier's geometric shape. The barrier was given a height of 813 mm (32 in.), mirroring the standard height for concrete parapets and allowing for attachment of approach guardrail transitions. The barrier's width and internal steel reinforcement were optimized by identifying the configurations which met the minimum structural capacity and exhibited the lowest construction cost. The structural capacity for each barrier configuration was calculated using yield line theory, and the strength requirement was set at 223 kN (50 kips). Construction costs for each barrier configuration were calculated from material and installation estimates for concrete and steel provided by roadway barrier contractors. In all, 900 different barrier configurations were evaluated, and the top design configurations were identified.

Barrier end sections were also designed for the barrier using similar methods to the interior section design. The yield-line analysis equations were modified to reflect the end section's failure shape. Also, the barrier configurations were limited to those with the same longitudinal steel configuration as the chosen interior section to create continuity between sections.

To anchor the barrier, a footing was designed such that no ties to the roadway slabs were necessary. The system's stand-alone ability allows installation of the barrier and footing to occur at any time, including after the roadway slabs have been poured and cured, without the use of

additional asphalt surfacing. The footing was designed with a torsion capacity equal to the yield-line calculated overturning resistance of the barrier. As such, the barrier was configured to withstand TL-3 impacts without rotation.

A full-scale vehicle crash test, no. CBPP-1, was conducted with a pickup truck impacting the selected barrier configuration according to TL-3 test conditions. The system was installed such that the barrier face was located 425 mm (16.75 in.) in front of two 1.2-m (4-ft) square by 2.4-m (8-ft) tall, simulated bridge piers. The reinforced concrete barrier successfully redirected the pickup truck with minimal damage to the barrier. Minor snagging occurred between the engine hood and the bridge pier, but the engine hood remained attached to the vehicle and did not penetrate the occupant compartment. Therefore, the barrier was determined to be acceptable according to the TL-3 safety performance criteria presented in NCHRP Report 350. A summary of the Safety performance evaluation is provided in Table 9.

Although only one barrier configuration was tested, MwRSF has full confidence that any of the nine configurations listed in Table 2 (see Section 3.4) would also successfully redirect the vehicle. All nine of these barrier designs resulted in similar structural capacities and construction costs. Also, no major structural damage was found on the crash-tested system, thus leading MwRSF engineers to believe that the system held more than adequate capacity to redirect the pickup truck under TL-3 conditions. Therefore, all nine of these barrier configurations would serve as acceptable system installations and are recommended for use as long as the lateral offset from the barrier face to the pier face remained the same.

Due to the concrete forms shifting during the placing and curing of the concrete, the offset distance from the barrier's face to the face of the pier was 441 mm (17.375 in.) instead of the designed distance of 425 mm (16.75 in.). However, the amount of snag observed between the

engine hood and the bridge pier, approximately 64 mm (2.5 in.) of overlap, was much less than observed in previous full-scale crash testing near rigid structures. For example, during crash test no. MNTR-1, which was used in to determine the lateral barrier offset in Chapter 3, the engine hood of the pickup extended 133 mm (5.25 in.) past a concrete post and did not cause critical snagging. Therefore, MwRSF researchers have recommended the offset from the barrier face to the face of the pier to remain at the designed distance of 425 mm (16.75 in.).

**Table 9. Summary of Safety Performance Evaluation Results, Test CBPP-1**

| Evaluation Factors | Evaluation Criteria | | Test CBPP-1 |
|---|---|---|---|
| Structural Adequacy | A. | Test article should contain and redirect the vehicle; the vehicle should not penetrate, underride, or override the installation although a controlled lateral deflection of the test article is acceptable. | S |
| Occupant Risk | D. | Detached elements, fragments or other debris from the test article should not penetrate or show potential for penetrating the occupant compartment, or present an undue hazard to other traffic, pedestrians, or personnel in a work zone. Deformations of, or intrusions into, the occupant compartment that could cause serious injuries should not be permitted. | S |
| | F. | The vehicle should remain upright during and after collision although moderate roll, pitching, and yawing are acceptable. | S |
| | H. | Longitudinal and lateral occupant impact velocities should fall below the preferred value of 9 m/s (29.53 ft/s), or at least below the maximum allowable value of 12 m/s (39.37 ft/s). | S |
| | I. | Longitudinal and lateral occupant ridedown accelerations should fall below the preferred value of 15 g's, or at least below the maximum allowable value of 20 g's. | S |
| Vehicle Trajectory | K. | After collision it is preferable that the vehicle's trajectory not intrude into adjacent traffic lanes. | S |
| | L. | The occupant impact velocity in the longitudinal direction should not exceed 12 m/s (39.37 ft/s), and the occupant ridedown acceleration in the longitudinal direction should not exceed 20 g's. | S |
| | M. | The exit angle from the test article preferably should be less than 60 percent of test impact angle measured at time of vehicle loss of contact with test device. | S |

S - Satisfactory
M - Marginal
U - Unsatisfactory
NA - Not Available

# 10 REFERENCES


1. Keller, E.A., Sicking, D.L., Faller, R.K., Polivka, K.A., Rhode, J.R., *Guidelines for Attachments to Bridge Rails and Median Barriers*, Transportation Research Report No. TRP-03-98-03, Midwest Roadside Safety Facility, University of Nebraska-Lincoln, February 2003.

2. Ross, H.E., Sicking, D.L., Zimmer, R.A., and Michie, J.D., *Recommended Procedures for the Safety Performance Evaluation of Highway Features*, National Cooperative Research Program (NCHRP) Report No. 350, Transportation Research Board, Washington, D.C., 1993.

3. Rosenbaugh, S.K., Sicking, D.L., and Faller, R.K., *Development of a TL-5 Vertical-Faced Concrete Median Barrier Incorporating Head Ejection Criteria*, Transportation Research Report No. TRP-03-194-07, Midwest Roadside Safety Facility, University of Nebraska-Lincoln, December 2007.

4. Mak, K.K., Sicking, D.L., *Rollover Caused by Concrete Safety Shaped Barriers*, Transportation Research Record No. 1258, Transportation Research Board, National Research Council, Washington, D.C., 1990.

5. *Building Code Requirements for Structural Concrete (ACI 318-05) and Commentary (ACI 318R-05): An ACI Standard*, Reported by ACI Committee 318, American Concrete Institute, Farmington Hills, MI, August 2005.

6. *AASHTO LRFD Bridge Design Specifications*, American Association of State Highway and Transportation Officials, AASHTO Subcommittee on Bridges and Structures, Washington, D.C., May 2001.

7. Hirsch, T.J., *Analytical Evaluation of Texas Bridge Rails to Contain Buses and Trucks*, Report No. FHWA TX 78-230-2, Performed for the Texas State Department of Highways and Public Transportation, Performed by Texas Transportation Institute, Texas A&M University, College Station, Texas, August 1978.

8. Alberson, D.C., Williams, W.F., Menges, W.L., Haug, R.R., *Testing and Evaluation of the Florida Jersey Safety Shaped Bridge Rail*, Report No. FHWA/TX-04/9-8132-1, Performed by Texas Transportation Institute, Texas A&M University, College Station, Texas, February 2004.

9. Nawy, E.G., *Reinforced Concrete: A Fundamental Approach*, Fifth Edition, Pearson Prentice Hall, Upper Saddle River, NJ, 2005.

10. Bielenberg, B.W., Faller, R.K., Holloway, J.C., Reid, J.D., Rhode, J.R., Sicking, D.L., *Performance Evaluation of the Redesigned Beat Bridge Pier Protection System*, Final Report to Safety By Design Company, Transportation Research Report No. TRP-03-140-03, Midwest Roadside Safety Facility, University of Nebraska-Lincoln, August 2003.

11. Polivka,K.A., Rohde, J.R., Faller, R.K., Holloway, J.C., Sicking, D.L., *Design and Evaluation of Minnesota's Timber Rub-Rail for Noise Barriers*, Final Report to Minnesota Department of Transportation, Transportation Research Report No. TRP-03-156-05, Midwest Roadside Safety Facility, University of Nebraska Lincoln, March 2005.

12. Buth, C.E., Hirsch, T.J., and Menges, W.L., *Testing of the New Bridge Rail and Transition Designs,* Technical Report, FHWA Contract No. DTFH61-86-C-00071, Report No. FHWA-RD-93-058, Federal Highway Administration, Washington D.C., September 1993.

13. Faller, R.K., Magdaleno, J.A., and Post, E.R., *Full-Scale Vehicle Crash Tests on the Iowa Retrofit Concrete Barrier Rail*, Final Report to Iowa Department of Transportation, Transportation Research Report No. TRP-03-15-88, Civil Engineering Department, University of Nebraska-Lincoln, January 1989.

14. Hinch, J., Yang, T.L., and Owings, R., *Guidance Systems for Vehicle Testing,* ENSCO, Inc., Springfield, VA, 1986.

15. *Center of Gravity Test Code - SAE J874 March 1981,* SAE Handbook Vol. 4, Society of Automotive Engineers, Inc., Warrendale, Pennsylvania, 1986.

16. *Vehicle Damage Scale for Traffic Investigators*, Second Edition, Technical Bulletin No. 1, Traffic Accident Data (TAD) Project, National Safety Council, Chicago, Illinois, 1971

17. *Collision Deformation Classification – Recommended Practice J224 March 1980*, Handbook Volume 4, Society of Automotive Engineers (SAE), Warrendale, Pennsylvania, 1985

# 11 APPENDICES

## APPENDIX A. Analysis of Capacity and Cost for All Barrier Configurations

Table A-1. Calculated Ultimate Strengths and Costs for Barrier Configurations

Note: The capacity of each barrier configuration was calculated using yield line theory [7] and a reduction factor of $\Phi = 0.9$.

$$L_{CR} = \frac{\ell}{2} + \sqrt{\left(\frac{\ell}{2}\right)^2 + 8H\frac{M_B + M_W H}{M_C}}$$

$$w\ell = \frac{8\left(M_B + M_W H\right)}{L_{CR} - \frac{\ell}{2}} + \frac{M_C L^2}{H\left(L_{CR} - \frac{\ell}{2}\right)}$$

Factored Capacity = 0.9 * wℓ

## Table A-1. Calculated Ultimate Strengths and Costs for Barrier Configurations

| Barrier Width (in.) | Stirrups | | Mc (k-ft/ft) | Longitudinal Bars | | Mw (k-ft/ft) | Steel (lb. / ft) | Concrete ($yd^3$/ft) | Yield Line Calculations | | Total Cost ($/ft) |
|---|---|---|---|---|---|---|---|---|---|---|---|
| | Bar No. | Spacing (in.) | | Bar No. | Quantity | | | | Critical Length (ft) | Factored Capacity Φwℓ (k) | |
| 6 | 4 | 6 | 9.25 | 4 | 4 | 4.16 | 12.14 | 0.04845 | 7.44 | 46.44 | $16.31 |
| | | | | | 6 | 6.00 | 13.47 | 0.04835 | 8.40 | 52.42 | $17.67 |
| | | | | | 8 | 7.69 | 14.81 | 0.04824 | 9.16 | 57.20 | $19.02 |
| | | | | | 10 | 9.13 | 16.14 | 0.04814 | 9.75 | 60.90 | $20.38 |
| | | | | | 12 | 10.16 | 17.48 | 0.04804 | 10.15 | 63.39 | $21.73 |
| | | | | 5 | 4 | 6.19 | 13.64 | 0.04834 | 8.48 | 52.98 | $17.84 |
| | | | | | 6 | 8.66 | 15.72 | 0.04818 | 9.57 | 59.72 | $19.95 |
| | | | | | 8 | 10.34 | 17.81 | 0.04802 | 10.22 | 63.83 | $22.06 |
| | | | | | 10 | 11.59 | 19.89 | 0.04786 | 10.68 | 66.67 | $24.18 |
| | | | | | 12 | 12.75 | 21.98 | 0.04770 | 11.08 | 69.17 | $26.29 |
| | | | | 6 | 4 | 8.28 | 15.47 | 0.04820 | 9.41 | 58.76 | $19.70 |
| | | | | | 6 | 10.72 | 18.48 | 0.04797 | 10.36 | 64.70 | $22.74 |
| | | | | | 8 | 12.34 | 21.48 | 0.04775 | 10.94 | 68.30 | $25.79 |
| | | | | | 10 | 13.75 | 24.48 | 0.04752 | 11.41 | 71.25 | $28.83 |
| | | | | | 12 | 14.91 | 27.49 | 0.04730 | 11.78 | 73.56 | $31.88 |
| | | 12 | 5.42 | 4 | 4 | 4.16 | 7.40 | 0.04881 | 8.90 | 32.55 | $11.52 |
| | | | | | 6 | 6.00 | 8.74 | 0.04871 | 10.19 | 37.24 | $12.87 |
| | | | | | 8 | 7.69 | 10.08 | 0.04861 | 11.21 | 40.97 | $14.23 |
| | | | | | 10 | 9.13 | 11.41 | 0.04850 | 11.99 | 43.84 | $15.58 |
| | | | | | 12 | 10.16 | 12.75 | 0.04840 | 12.52 | 45.78 | $16.94 |
| | | | | 5 | 4 | 6.19 | 8.90 | 0.04870 | 10.31 | 37.68 | $13.04 |
| | | | | | 6 | 8.66 | 10.99 | 0.04854 | 11.74 | 42.93 | $15.15 |
| | | | | | 8 | 10.34 | 13.08 | 0.04838 | 12.61 | 46.12 | $17.27 |
| | | | | | 10 | 11.59 | 15.16 | 0.04822 | 13.21 | 48.32 | $19.38 |
| | | | | | 12 | 12.75 | 17.25 | 0.04806 | 13.74 | 50.25 | $21.50 |
| | | | | 6 | 4 | 8.28 | 10.74 | 0.04857 | 11.54 | 42.19 | $14.90 |
| | | | | | 6 | 10.72 | 13.74 | 0.04834 | 12.80 | 46.79 | $17.95 |
| | | | | | 8 | 12.34 | 16.75 | 0.04811 | 13.56 | 49.58 | $20.99 |
| | | | | | 10 | 13.75 | 19.75 | 0.04789 | 14.18 | 51.85 | $24.04 |
| | | | | | 12 | 14.91 | 22.76 | 0.04766 | 14.67 | 53.64 | $27.08 |
| | | 18 | 3.72 | 4 | 4 | 4.16 | 5.83 | 0.04893 | 10.22 | 25.67 | $9.92 |
| | | | | | 6 | 6.00 | 7.16 | 0.04883 | 11.78 | 29.60 | $11.27 |
| | | | | | 8 | 7.69 | 8.50 | 0.04873 | 13.02 | 32.72 | $12.63 |
| | | | | | 10 | 9.13 | 9.83 | 0.04863 | 13.98 | 35.12 | $13.98 |
| | | | | | 12 | 10.16 | 11.17 | 0.04852 | 14.62 | 36.73 | $15.34 |
| | | | | 5 | 4 | 6.19 | 7.33 | 0.04882 | 11.93 | 29.97 | $11.44 |
| | | | | | 6 | 8.66 | 9.41 | 0.04866 | 13.67 | 34.36 | $13.55 |
| | | | | | 8 | 10.34 | 11.50 | 0.04850 | 14.73 | 37.01 | $15.67 |
| | | | | | 10 | 11.59 | 13.58 | 0.04834 | 15.46 | 38.85 | $17.78 |
| | | | | | 12 | 12.75 | 15.67 | 0.04818 | 16.10 | 40.46 | $19.90 |
| | | | | 6 | 4 | 8.28 | 9.16 | 0.04869 | 13.43 | 33.73 | $13.30 |
| | | | | | 6 | 10.72 | 12.17 | 0.04846 | 14.95 | 37.57 | $16.35 |
| | | | | | 8 | 12.34 | 15.17 | 0.04823 | 15.88 | 39.90 | $19.39 |
| | | | | | 10 | 13.75 | 18.17 | 0.04801 | 16.63 | 41.79 | $22.44 |
| | | | | | 12 | 14.91 | 21.18 | 0.04778 | 17.23 | 43.28 | $25.48 |
| | | 24 | 2.83 | 4 | 4 | 4.16 | 5.04 | 0.04899 | 11.35 | 21.71 | $9.12 |
| | | | | | 6 | 6.00 | 6.37 | 0.04889 | 13.16 | 25.16 | $10.47 |
| | | | | | 8 | 7.69 | 7.71 | 0.04879 | 14.58 | 27.89 | $11.83 |
| | | | | | 10 | 9.13 | 9.05 | 0.04869 | 15.68 | 29.99 | $13.18 |
| | | | | | 12 | 10.16 | 10.38 | 0.04858 | 16.42 | 31.40 | $14.54 |
| | | | | 5 | 4 | 6.19 | 6.54 | 0.04888 | 13.32 | 25.48 | $10.64 |
| | | | | | 6 | 8.66 | 8.62 | 0.04872 | 15.33 | 29.33 | $12.75 |
| | | | | | 8 | 10.34 | 10.71 | 0.04856 | 16.55 | 31.65 | $14.87 |
| | | | | | 10 | 11.59 | 12.80 | 0.04840 | 17.39 | 33.25 | $16.98 |
| | | | | | 12 | 12.75 | 14.88 | 0.04824 | 18.12 | 34.66 | $19.10 |
| | | | | 6 | 4 | 8.28 | 8.37 | 0.04875 | 15.05 | 28.78 | $12.50 |
| | | | | | 6 | 10.72 | 11.38 | 0.04852 | 16.81 | 32.14 | $15.55 |
| | | | | | 8 | 12.34 | 14.38 | 0.04830 | 17.87 | 34.18 | $18.59 |
| | | | | | 10 | 13.75 | 17.39 | 0.04807 | 18.74 | 35.83 | $21.64 |
| | | | | | 12 | 14.91 | 20.39 | 0.04784 | 19.42 | 37.13 | $24.68 |

Black = Acceptable Design
Gray = Inadequate Structural Capacity

## Table A-1. Calculated Ultimate Strengths and Costs for Barrier Configurations

| Barrier Width (in.) | Stirrups | | Mc (k-ft/ft) | Longitudinal Bars | | Mw (k-ft/ft) | Steel (lb. / ft) | Concrete ($yd^3$/ft) | Yield Line Calculations | | Total Cost ($/ft) |
|---|---|---|---|---|---|---|---|---|---|---|---|
| | Bar No. | Spacing (in.) | | Bar No. | Quantity | | | | Critical Length (ft) | Factored Capacity Φwℓ (k) | |
| 6 | 5 | 6 | 12.38 | 4 | 4 | 4.16 | 17.45 | 0.04805 | 6.81 | 56.86 | $21.70 |
| | | | | | 6 | 6.00 | 18.78 | 0.04794 | 7.62 | 63.65 | $23.06 |
| | | | | | 8 | 7.69 | 20.12 | 0.04784 | 8.27 | 69.10 | $24.41 |
| | | | | | 10 | 9.16 | 21.46 | 0.04774 | 8.79 | 73.42 | $25.76 |
| | | | | | 12 | 10.22 | 22.79 | 0.04764 | 9.14 | 76.35 | $27.12 |
| | | | | 5 | 4 | 6.19 | 18.95 | 0.04793 | 7.70 | 64.29 | $23.22 |
| | | | | | 6 | 8.66 | 21.03 | 0.04777 | 8.62 | 71.98 | $25.34 |
| | | | | | 8 | 10.44 | 23.12 | 0.04762 | 9.21 | 76.93 | $27.45 |
| | | | | | 10 | 11.63 | 25.21 | 0.04746 | 9.58 | 80.01 | $29.57 |
| | | | | | 12 | 12.63 | 27.29 | 0.04730 | 9.88 | 82.50 | $31.68 |
| | | | | 6 | 4 | 8.31 | 20.78 | 0.04780 | 8.50 | 70.98 | $25.08 |
| | | | | | 6 | 10.81 | 23.79 | 0.04757 | 9.33 | 77.92 | $28.13 |
| | | | | | 8 | 12.28 | 26.79 | 0.04735 | 9.78 | 81.66 | $31.17 |
| | | | | | 10 | 13.47 | 29.80 | 0.04712 | 10.12 | 84.52 | $34.22 |
| | | | | | 12 | 14.31 | 32.80 | 0.04690 | 10.35 | 86.49 | $37.27 |
| | | 12 | 7.83 | 4 | 4 | 4.16 | 10.06 | 0.04861 | 7.85 | 41.49 | $14.21 |
| | | | | | 6 | 6.00 | 11.40 | 0.04851 | 8.90 | 47.05 | $15.57 |
| | | | | | 8 | 7.69 | 12.73 | 0.04841 | 9.73 | 51.47 | $16.92 |
| | | | | | 10 | 9.16 | 14.07 | 0.04830 | 10.40 | 54.97 | $18.27 |
| | | | | | 12 | 10.22 | 15.40 | 0.04820 | 10.84 | 57.34 | $19.63 |
| | | | | 5 | 4 | 6.19 | 11.56 | 0.04850 | 9.00 | 47.56 | $15.73 |
| | | | | | 6 | 8.66 | 13.65 | 0.04834 | 10.18 | 53.81 | $17.85 |
| | | | | | 8 | 10.44 | 15.73 | 0.04818 | 10.93 | 57.81 | $19.96 |
| | | | | | 10 | 11.63 | 17.82 | 0.04802 | 11.40 | 60.30 | $22.08 |
| | | | | | 12 | 12.63 | 19.90 | 0.04786 | 11.78 | 62.30 | $24.19 |
| | | | | 6 | 4 | 8.31 | 13.40 | 0.04837 | 10.02 | 53.00 | $17.59 |
| | | | | | 6 | 10.81 | 16.40 | 0.04814 | 11.08 | 58.61 | $20.64 |
| | | | | | 8 | 12.28 | 19.40 | 0.04791 | 11.65 | 61.62 | $23.68 |
| | | | | | 10 | 13.47 | 22.41 | 0.04769 | 12.09 | 63.93 | $26.73 |
| | | | | | 12 | 14.31 | 25.41 | 0.04746 | 12.39 | 65.51 | $29.78 |
| | | 18 | 5.56 | 4 | 4 | 4.16 | 7.60 | 0.04880 | 8.82 | 33.09 | $11.71 |
| | | | | | 6 | 6.00 | 8.93 | 0.04870 | 10.09 | 37.84 | $13.07 |
| | | | | | 8 | 7.69 | 10.27 | 0.04859 | 11.10 | 41.61 | $14.42 |
| | | | | | 10 | 9.16 | 11.61 | 0.04849 | 11.89 | 44.58 | $15.78 |
| | | | | | 12 | 10.22 | 12.94 | 0.04839 | 12.42 | 46.59 | $17.13 |
| | | | | 5 | 4 | 6.19 | 9.10 | 0.04869 | 10.21 | 38.28 | $13.24 |
| | | | | | 6 | 8.66 | 11.18 | 0.04853 | 11.62 | 43.59 | $15.35 |
| | | | | | 8 | 10.44 | 13.27 | 0.04837 | 12.53 | 46.99 | $17.46 |
| | | | | | 10 | 11.63 | 15.36 | 0.04821 | 13.09 | 49.10 | $19.58 |
| | | | | | 12 | 12.63 | 17.44 | 0.04805 | 13.54 | 50.79 | $21.69 |
| | | | | 6 | 4 | 8.31 | 10.93 | 0.04855 | 11.44 | 42.90 | $15.10 |
| | | | | | 6 | 10.81 | 13.94 | 0.04833 | 12.71 | 47.67 | $18.14 |
| | | | | | 8 | 12.28 | 16.94 | 0.04810 | 13.39 | 50.22 | $21.19 |
| | | | | | 10 | 13.47 | 19.95 | 0.04787 | 13.91 | 52.17 | $24.23 |
| | | | | | 12 | 14.31 | 22.95 | 0.04765 | 14.27 | 53.51 | $27.28 |
| | | 24 | 4.29 | 4 | 4 | 4.16 | 6.37 | 0.04889 | 9.69 | 28.06 | $10.47 |
| | | | | | 6 | 6.00 | 7.70 | 0.04879 | 11.14 | 32.27 | $11.82 |
| | | | | | 8 | 7.69 | 9.04 | 0.04869 | 12.29 | 35.61 | $13.17 |
| | | | | | 10 | 9.16 | 10.37 | 0.04859 | 13.20 | 38.23 | $14.53 |
| | | | | | 12 | 10.22 | 11.71 | 0.04848 | 13.81 | 40.00 | $15.88 |
| | | | | 5 | 4 | 6.19 | 7.87 | 0.04878 | 11.27 | 32.66 | $11.99 |
| | | | | | 6 | 8.66 | 9.95 | 0.04862 | 12.90 | 37.36 | $14.10 |
| | | | | | 8 | 10.44 | 12.04 | 0.04846 | 13.93 | 40.36 | $16.22 |
| | | | | | 10 | 11.63 | 14.12 | 0.04830 | 14.57 | 42.22 | $18.33 |
| | | | | | 12 | 12.63 | 16.21 | 0.04814 | 15.09 | 43.71 | $20.45 |
| | | | | 6 | 4 | 8.31 | 9.70 | 0.04865 | 12.69 | 36.75 | $13.85 |
| | | | | | 6 | 10.81 | 12.71 | 0.04842 | 14.14 | 40.96 | $16.89 |
| | | | | | 8 | 12.28 | 15.71 | 0.04819 | 14.91 | 43.21 | $19.94 |
| | | | | | 10 | 13.47 | 18.71 | 0.04797 | 15.51 | 44.93 | $22.99 |
| | | | | | 12 | 14.31 | 21.72 | 0.04774 | 15.92 | 46.11 | $26.03 |

Black = Acceptable Design
Gray = Inadequate Structural Capacity

## Table A-1. Calculated Ultimate Strengths and Costs for Barrier Configurations

| Barrier Width (in.) | Stirrups | | Mc (k-ft/ft) | Longitudinal Bars | | Mw (k-ft/ft) | Steel (lb. / ft) | Concrete ($yd^3$/ft) | Yield Line Calculations | | Total Cost ($/ft) |
|---|---|---|---|---|---|---|---|---|---|---|---|
| | Bar No. | Spacing (in.) | | Bar No. | Quantity | | | | Critical Length (ft) | Factored Capacity Φwℓ (k) | |
| 6 | 6 | 6 | 15.58 | 4 | 4 | 4.16 | 23.95 | 0.04757 | 6.38 | 67.10 | $28.29 |
| | | | | | 6 | 6.00 | 25.29 | 0.04747 | 7.09 | 74.57 | $29.65 |
| | | | | | 8 | 7.69 | 26.62 | 0.04737 | 7.66 | 80.60 | $31.00 |
| | | | | | 10 | 9.16 | 27.96 | 0.04727 | 8.12 | 85.39 | $32.36 |
| | | | | | 12 | 10.31 | 29.29 | 0.04716 | 8.45 | 88.92 | $33.71 |
| | | | | 5 | 4 | 6.19 | 25.45 | 0.04746 | 7.16 | 75.28 | $29.82 |
| | | | | | 6 | 8.66 | 27.54 | 0.04730 | 7.97 | 83.80 | $31.93 |
| | | | | | 8 | 10.53 | 29.62 | 0.04714 | 8.52 | 89.57 | $34.05 |
| | | | | | 10 | 11.63 | 31.71 | 0.04698 | 8.81 | 92.72 | $36.16 |
| | | | | | 12 | 12.53 | 33.79 | 0.04682 | 9.05 | 95.23 | $38.27 |
| | | | | 6 | 4 | 8.31 | 27.29 | 0.04733 | 7.86 | 82.68 | $31.68 |
| | | | | | 6 | 10.88 | 30.29 | 0.04710 | 8.61 | 90.57 | $34.72 |
| | | | | | 8 | 12.22 | 33.29 | 0.04687 | 8.97 | 94.37 | $37.77 |
| | | | | | 10 | 13.13 | 36.30 | 0.04665 | 9.21 | 96.83 | $40.81 |
| | | | | | 12 | 13.72 | 39.30 | 0.04642 | 9.35 | 98.39 | $43.86 |
| | | 12 | 9.88 | 4 | 4 | 4.16 | 13.31 | 0.04838 | 7.29 | 48.57 | $17.51 |
| | | | | | 6 | 6.00 | 14.65 | 0.04827 | 8.21 | 54.73 | $18.86 |
| | | | | | 8 | 7.69 | 15.98 | 0.04817 | 8.95 | 59.65 | $20.22 |
| | | | | | 10 | 9.16 | 17.32 | 0.04807 | 9.53 | 63.54 | $21.57 |
| | | | | | 12 | 10.31 | 18.66 | 0.04796 | 9.96 | 66.41 | $22.93 |
| | | | | 5 | 4 | 6.19 | 14.81 | 0.04826 | 8.30 | 55.30 | $19.03 |
| | | | | | 6 | 8.66 | 16.90 | 0.04810 | 9.34 | 62.25 | $21.14 |
| | | | | | 8 | 10.53 | 18.98 | 0.04794 | 10.04 | 66.93 | $23.26 |
| | | | | | 10 | 11.63 | 21.07 | 0.04778 | 10.42 | 69.49 | $25.37 |
| | | | | | 12 | 12.53 | 23.16 | 0.04762 | 10.73 | 71.51 | $27.49 |
| | | | | 6 | 4 | 8.31 | 16.65 | 0.04813 | 9.20 | 61.35 | $20.89 |
| | | | | | 6 | 10.88 | 19.65 | 0.04790 | 10.16 | 67.75 | $23.94 |
| | | | | | 8 | 12.22 | 22.66 | 0.04768 | 10.63 | 70.82 | $26.98 |
| | | | | | 10 | 13.13 | 25.66 | 0.04745 | 10.92 | 72.81 | $30.03 |
| | | | | | 12 | 13.72 | 28.66 | 0.04722 | 11.11 | 74.07 | $33.07 |
| | | 18 | 7.50 | 4 | 4 | 4.16 | 9.76 | 0.04864 | 7.96 | 40.30 | $13.91 |
| | | | | | 6 | 6.00 | 11.10 | 0.04854 | 9.04 | 45.75 | $15.27 |
| | | | | | 8 | 7.69 | 12.44 | 0.04844 | 9.89 | 50.09 | $16.62 |
| | | | | | 10 | 9.16 | 13.77 | 0.04833 | 10.57 | 53.51 | $17.98 |
| | | | | | 12 | 10.31 | 15.11 | 0.04823 | 11.07 | 56.03 | $19.33 |
| | | | | 5 | 4 | 6.19 | 11.26 | 0.04853 | 9.14 | 46.25 | $15.43 |
| | | | | | 6 | 8.66 | 13.35 | 0.04837 | 10.35 | 52.38 | $17.55 |
| | | | | | 8 | 10.53 | 15.44 | 0.04821 | 11.16 | 56.49 | $19.66 |
| | | | | | 10 | 11.63 | 17.52 | 0.04805 | 11.60 | 58.73 | $21.78 |
| | | | | | 12 | 12.53 | 19.61 | 0.04789 | 11.95 | 60.51 | $23.89 |
| | | | | 6 | 4 | 8.31 | 13.10 | 0.04840 | 10.19 | 51.58 | $17.29 |
| | | | | | 6 | 10.88 | 16.10 | 0.04817 | 11.30 | 57.21 | $20.34 |
| | | | | | 8 | 12.22 | 19.11 | 0.04794 | 11.83 | 59.90 | $23.39 |
| | | | | | 10 | 13.13 | 22.11 | 0.04772 | 12.18 | 61.64 | $26.43 |
| | | | | | 12 | 13.72 | 25.12 | 0.04749 | 12.40 | 62.75 | $29.48 |
| | | 24 | 5.88 | 4 | 4 | 4.16 | 7.99 | 0.04878 | 8.65 | 34.31 | $12.11 |
| | | | | | 6 | 6.00 | 9.33 | 0.04867 | 9.88 | 39.18 | $13.47 |
| | | | | | 8 | 7.69 | 10.66 | 0.04857 | 10.86 | 43.05 | $14.82 |
| | | | | | 10 | 9.16 | 12.00 | 0.04847 | 11.63 | 46.10 | $16.18 |
| | | | | | 12 | 10.31 | 13.34 | 0.04836 | 12.19 | 48.35 | $17.53 |
| | | | | 5 | 4 | 6.19 | 9.49 | 0.04866 | 9.99 | 39.64 | $13.64 |
| | | | | | 6 | 8.66 | 11.58 | 0.04850 | 11.37 | 45.09 | $15.75 |
| | | | | | 8 | 10.53 | 13.66 | 0.04834 | 12.29 | 48.76 | $17.86 |
| | | | | | 10 | 11.63 | 15.75 | 0.04818 | 12.80 | 50.75 | $19.98 |
| | | | | | 12 | 12.53 | 17.84 | 0.04803 | 13.20 | 52.33 | $22.09 |
| | | | | 6 | 4 | 8.31 | 11.33 | 0.04853 | 11.19 | 44.38 | $15.50 |
| | | | | | 6 | 10.88 | 14.33 | 0.04830 | 12.45 | 49.39 | $18.54 |
| | | | | | 8 | 12.22 | 17.34 | 0.04808 | 13.06 | 51.79 | $21.59 |
| | | | | | 10 | 13.13 | 20.34 | 0.04785 | 13.45 | 53.34 | $24.63 |
| | | | | | 12 | 13.72 | 23.34 | 0.04762 | 13.70 | 54.32 | $27.68 |

Black = Acceptable Design
Gray = Inadequate Structural Capacity

## Table A-1. Calculated Ultimate Strengths and Costs for Barrier Configurations

| Barrier Width (in.) | Stirrups | | Mc (k-ft/ft) | Longitudinal Bars | | Mw (k-ft/ft) | Steel (lb. / ft) | Concrete ($yd^3$/ft) | Yield Line Calculations | | Total Cost ($/ft) |
|---|---|---|---|---|---|---|---|---|---|---|---|
| | Bar No. | Spacing (in.) | | Bar No. | Quantity | | | | Critical Length (ft) | Factored Capacity Φwℓ (k) | |
| 6.5 | 4 | 6 | 10.33 | 4 | 4 | 4.53 | 12.14 | 0.05256 | 7.38 | 51.48 | $16.65 |
| | | | | | 6 | 6.56 | 13.47 | 0.05246 | 8.33 | 58.13 | $18.00 |
| | | | | | 8 | 8.44 | 14.81 | 0.05236 | 9.10 | 63.49 | $19.36 |
| | | | | | 10 | 10.06 | 16.14 | 0.05225 | 9.71 | 67.71 | $20.71 |
| | | | | | 12 | 11.28 | 17.48 | 0.05215 | 10.13 | 70.66 | $22.07 |
| | | | | 5 | 4 | 6.75 | 13.64 | 0.05245 | 8.42 | 58.70 | $18.17 |
| | | | | | 6 | 9.53 | 15.72 | 0.05229 | 9.51 | 66.37 | $20.28 |
| | | | | | 8 | 11.53 | 17.81 | 0.05213 | 10.21 | 71.25 | $22.40 |
| | | | | | 10 | 13.06 | 19.89 | 0.05197 | 10.71 | 74.72 | $24.51 |
| | | | | | 12 | 14.50 | 21.98 | 0.05181 | 11.16 | 77.81 | $26.63 |
| | | | | 6 | 4 | 9.13 | 15.47 | 0.05232 | 9.36 | 65.32 | $20.03 |
| | | | | | 6 | 11.97 | 18.48 | 0.05209 | 10.36 | 72.26 | $23.08 |
| | | | | | 8 | 14.00 | 21.48 | 0.05186 | 11.00 | 76.75 | $26.12 |
| | | | | | 10 | 15.88 | 24.48 | 0.05164 | 11.56 | 80.63 | $29.17 |
| | | | | | 12 | 17.59 | 27.49 | 0.05141 | 12.04 | 84.00 | $32.21 |
| | | 12 | 5.92 | 4 | 4 | 4.53 | 7.40 | 0.05293 | 8.90 | 35.53 | $11.85 |
| | | | | | 6 | 6.56 | 8.74 | 0.05282 | 10.19 | 40.70 | $13.21 |
| | | | | | 8 | 8.44 | 10.08 | 0.05272 | 11.23 | 44.84 | $14.56 |
| | | | | | 10 | 10.06 | 11.41 | 0.05262 | 12.04 | 48.07 | $15.92 |
| | | | | | 12 | 11.28 | 12.75 | 0.05252 | 12.61 | 50.34 | $17.27 |
| | | | | 5 | 4 | 6.75 | 8.90 | 0.05281 | 10.30 | 41.14 | $13.37 |
| | | | | | 6 | 9.53 | 10.99 | 0.05266 | 11.78 | 47.05 | $15.49 |
| | | | | | 8 | 11.53 | 13.08 | 0.05250 | 12.72 | 50.79 | $17.60 |
| | | | | | 10 | 13.06 | 15.16 | 0.05234 | 13.38 | 53.45 | $19.72 |
| | | | | | 12 | 14.50 | 17.25 | 0.05218 | 13.98 | 55.82 | $21.83 |
| | | | | 6 | 4 | 9.13 | 10.74 | 0.05268 | 11.58 | 46.24 | $15.23 |
| | | | | | 6 | 11.97 | 13.74 | 0.05245 | 12.91 | 51.57 | $18.28 |
| | | | | | 8 | 14.00 | 16.75 | 0.05223 | 13.77 | 55.01 | $21.33 |
| | | | | | 10 | 15.88 | 19.75 | 0.05200 | 14.52 | 57.97 | $24.37 |
| | | | | | 12 | 17.59 | 22.76 | 0.05178 | 15.16 | 60.54 | $27.42 |
| | | 18 | 4.06 | 4 | 4 | 4.53 | 5.83 | 0.05305 | 10.22 | 27.98 | $10.25 |
| | | | | | 6 | 6.56 | 7.16 | 0.05295 | 11.80 | 32.30 | $11.61 |
| | | | | | 8 | 8.44 | 8.50 | 0.05284 | 13.06 | 35.76 | $12.96 |
| | | | | | 10 | 10.06 | 9.83 | 0.05274 | 14.05 | 38.46 | $14.32 |
| | | | | | 12 | 11.28 | 11.17 | 0.05264 | 14.74 | 40.34 | $15.67 |
| | | | | 5 | 4 | 6.75 | 7.33 | 0.05294 | 11.93 | 32.67 | $11.77 |
| | | | | | 6 | 9.53 | 9.41 | 0.05278 | 13.73 | 37.60 | $13.89 |
| | | | | | 8 | 11.53 | 11.50 | 0.05262 | 14.87 | 40.72 | $16.00 |
| | | | | | 10 | 13.06 | 13.58 | 0.05246 | 15.68 | 42.93 | $18.12 |
| | | | | | 12 | 14.50 | 15.67 | 0.05230 | 16.40 | 44.90 | $20.23 |
| | | | | 6 | 4 | 9.13 | 9.16 | 0.05280 | 13.49 | 36.93 | $13.64 |
| | | | | | 6 | 11.97 | 12.17 | 0.05258 | 15.11 | 41.37 | $16.68 |
| | | | | | 8 | 14.00 | 15.17 | 0.05235 | 16.16 | 44.23 | $19.73 |
| | | | | | 10 | 15.88 | 18.17 | 0.05212 | 17.06 | 46.69 | $22.77 |
| | | | | | 12 | 17.59 | 21.18 | 0.05190 | 17.84 | 48.83 | $25.82 |
| | | 24 | 3.08 | 4 | 4 | 4.53 | 5.04 | 0.05311 | 11.36 | 23.64 | $9.45 |
| | | | | | 6 | 6.56 | 6.37 | 0.05301 | 13.18 | 27.44 | $10.81 |
| | | | | | 8 | 8.44 | 7.71 | 0.05290 | 14.64 | 30.46 | $12.16 |
| | | | | | 10 | 10.06 | 9.05 | 0.05280 | 15.77 | 32.82 | $13.52 |
| | | | | | 12 | 11.28 | 10.38 | 0.05270 | 16.57 | 34.48 | $14.87 |
| | | | | 5 | 4 | 6.75 | 6.54 | 0.05300 | 13.34 | 27.76 | $10.97 |
| | | | | | 6 | 9.53 | 8.62 | 0.05284 | 15.41 | 32.07 | $13.09 |
| | | | | | 8 | 11.53 | 10.71 | 0.05268 | 16.72 | 34.80 | $15.20 |
| | | | | | 10 | 13.06 | 12.80 | 0.05252 | 17.65 | 36.74 | $17.32 |
| | | | | | 12 | 14.50 | 14.88 | 0.05236 | 18.48 | 38.46 | $19.43 |
| | | | | 6 | 4 | 9.13 | 8.37 | 0.05286 | 15.13 | 31.49 | $12.84 |
| | | | | | 6 | 11.97 | 11.38 | 0.05264 | 16.99 | 35.37 | $15.88 |
| | | | | | 8 | 14.00 | 14.38 | 0.05241 | 18.20 | 37.87 | $18.93 |
| | | | | | 10 | 15.88 | 17.39 | 0.05218 | 19.23 | 40.02 | $21.97 |
| | | | | | 12 | 17.59 | 20.39 | 0.05196 | 20.13 | 41.89 | $25.02 |

Black = Acceptable Design
Gray = Inadequate Structural Capacity

## Table A-1. Calculated Ultimate Strengths and Costs for Barrier Configurations

| Barrier Width (in.) | Stirrups | | Mc (k-ft/ft) | Longitudinal Bars | | Mw (k-ft/ft) | Steel (lb. / ft) | Concrete ($yd^3$/ft) | Yield Line Calculations | | Total Cost ($/ft) |
|---|---|---|---|---|---|---|---|---|---|---|---|
| | Bar No. | Spacing (in.) | | Bar No. | Quantity | | | | Critical Length (ft) | Factored Capacity Φwℓ (k) | |
| 6.5 | 5 | 6 | 14.00 | 4 | 4 | 4.53 | 17.45 | 0.05216 | 6.73 | 63.64 | $22.04 |
| | | | | | 6 | 6.56 | 18.78 | 0.05206 | 7.54 | 71.23 | $23.39 |
| | | | | | 8 | 8.44 | 20.12 | 0.05196 | 8.19 | 77.37 | $24.74 |
| | | | | | 10 | 10.09 | 21.46 | 0.05185 | 8.71 | 82.30 | $26.10 |
| | | | | | 12 | 11.34 | 22.79 | 0.05175 | 9.08 | 85.79 | $27.45 |
| | | | | 5 | 4 | 6.75 | 18.95 | 0.05205 | 7.61 | 71.88 | $23.56 |
| | | | | | 6 | 9.53 | 21.03 | 0.05189 | 8.54 | 80.67 | $25.67 |
| | | | | | 8 | 11.59 | 23.12 | 0.05173 | 9.15 | 86.46 | $27.79 |
| | | | | | 10 | 13.06 | 25.21 | 0.05157 | 9.56 | 90.30 | $29.90 |
| | | | | | 12 | 14.41 | 27.29 | 0.05141 | 9.91 | 93.63 | $32.01 |
| | | | | 6 | 4 | 9.13 | 20.78 | 0.05192 | 8.41 | 79.47 | $25.42 |
| | | | | | 6 | 12.03 | 23.79 | 0.05169 | 9.27 | 87.62 | $28.46 |
| | | | | | 8 | 13.97 | 26.79 | 0.05146 | 9.79 | 92.56 | $31.51 |
| | | | | | 10 | 15.66 | 29.80 | 0.05124 | 10.22 | 96.61 | $34.55 |
| | | | | | 12 | 17.19 | 32.80 | 0.05101 | 10.59 | 100.10 | $37.60 |
| | | 12 | 8.58 | 4 | 4 | 4.53 | 10.06 | 0.05273 | 7.83 | 45.39 | $14.55 |
| | | | | | 6 | 6.56 | 11.40 | 0.05262 | 8.89 | 51.52 | $15.90 |
| | | | | | 8 | 8.44 | 12.73 | 0.05252 | 9.74 | 56.44 | $17.25 |
| | | | | | 10 | 10.09 | 14.07 | 0.05242 | 10.42 | 60.37 | $18.61 |
| | | | | | 12 | 11.34 | 15.40 | 0.05232 | 10.90 | 63.14 | $19.96 |
| | | | | 5 | 4 | 6.75 | 11.56 | 0.05261 | 8.98 | 52.04 | $16.07 |
| | | | | | 6 | 9.53 | 13.65 | 0.05245 | 10.20 | 59.07 | $18.18 |
| | | | | | 8 | 11.59 | 15.73 | 0.05230 | 10.99 | 63.68 | $20.30 |
| | | | | | 10 | 13.06 | 17.82 | 0.05214 | 11.52 | 66.73 | $22.41 |
| | | | | | 12 | 14.41 | 19.90 | 0.05198 | 11.97 | 69.37 | $24.53 |
| | | | | 6 | 4 | 9.13 | 13.40 | 0.05248 | 10.03 | 58.11 | $17.93 |
| | | | | | 6 | 12.03 | 16.40 | 0.05225 | 11.15 | 64.61 | $20.97 |
| | | | | | 8 | 13.97 | 19.40 | 0.05203 | 11.83 | 68.53 | $24.02 |
| | | | | | 10 | 15.66 | 22.41 | 0.05180 | 12.38 | 71.73 | $27.06 |
| | | | | | 12 | 17.19 | 25.41 | 0.05158 | 12.86 | 74.50 | $30.11 |
| | | 18 | 6.11 | 4 | 4 | 4.53 | 7.60 | 0.05292 | 8.80 | 36.28 | $12.05 |
| | | | | | 6 | 6.56 | 8.93 | 0.05281 | 10.07 | 41.53 | $13.40 |
| | | | | | 8 | 8.44 | 10.27 | 0.05271 | 11.09 | 45.73 | $14.76 |
| | | | | | 10 | 10.09 | 11.61 | 0.05261 | 11.90 | 49.08 | $16.11 |
| | | | | | 12 | 11.34 | 12.94 | 0.05250 | 12.47 | 51.43 | $17.47 |
| | | | | 5 | 4 | 6.75 | 9.10 | 0.05280 | 10.18 | 41.97 | $13.57 |
| | | | | | 6 | 9.53 | 11.18 | 0.05264 | 11.63 | 47.97 | $15.68 |
| | | | | | 8 | 11.59 | 13.27 | 0.05248 | 12.58 | 51.89 | $17.80 |
| | | | | | 10 | 13.06 | 15.36 | 0.05232 | 13.21 | 54.48 | $19.91 |
| | | | | | 12 | 14.41 | 17.44 | 0.05216 | 13.75 | 56.73 | $22.03 |
| | | | | 6 | 4 | 9.13 | 10.93 | 0.05267 | 11.43 | 47.15 | $15.43 |
| | | | | | 6 | 12.03 | 13.94 | 0.05244 | 12.77 | 52.68 | $18.48 |
| | | | | | 8 | 13.97 | 16.94 | 0.05222 | 13.58 | 56.01 | $21.52 |
| | | | | | 10 | 15.66 | 19.95 | 0.05199 | 14.24 | 58.73 | $24.57 |
| | | | | | 12 | 17.19 | 22.95 | 0.05176 | 14.81 | 61.08 | $27.61 |
| | | 24 | 4.67 | 4 | 4 | 4.53 | 6.37 | 0.05301 | 9.70 | 30.54 | $10.80 |
| | | | | | 6 | 6.56 | 7.70 | 0.05291 | 11.17 | 35.17 | $12.15 |
| | | | | | 8 | 8.44 | 9.04 | 0.05280 | 12.34 | 38.86 | $13.51 |
| | | | | | 10 | 10.09 | 10.37 | 0.05270 | 13.27 | 41.81 | $14.86 |
| | | | | | 12 | 11.34 | 11.71 | 0.05260 | 13.93 | 43.87 | $16.22 |
| | | | | 5 | 4 | 6.75 | 7.87 | 0.05290 | 11.29 | 35.56 | $12.32 |
| | | | | | 6 | 9.53 | 9.95 | 0.05274 | 12.96 | 40.83 | $14.44 |
| | | | | | 8 | 11.59 | 12.04 | 0.05258 | 14.06 | 44.27 | $16.55 |
| | | | | | 10 | 13.06 | 14.12 | 0.05242 | 14.78 | 46.55 | $18.67 |
| | | | | | 12 | 14.41 | 16.21 | 0.05226 | 15.40 | 48.52 | $20.78 |
| | | | | 6 | 4 | 9.13 | 9.70 | 0.05276 | 12.73 | 40.11 | $14.18 |
| | | | | | 6 | 12.03 | 12.71 | 0.05254 | 14.27 | 44.97 | $17.23 |
| | | | | | 8 | 13.97 | 15.71 | 0.05231 | 15.20 | 47.89 | $20.27 |
| | | | | | 10 | 15.66 | 18.71 | 0.05208 | 15.96 | 50.27 | $23.32 |
| | | | | | 12 | 17.19 | 21.72 | 0.05186 | 16.61 | 52.33 | $26.37 |

Black = Acceptable Design
Gray = Inadequate Structural Capacity

## Table A-1. Calculated Ultimate Strengths and Costs for Barrier Configurations

| Barrier Width (in.) | Stirrups | | Mc (k-ft/ft) | Longitudinal Bars | | Mw (k-ft/ft) | Steel (lb. / ft) | Concrete ($yd^3$/ft) | Yield Line Calculations | | Total Cost ($/ft) |
|---|---|---|---|---|---|---|---|---|---|---|---|
| | Bar No. | Spacing (in.) | | Bar No. | Quantity | | | | Critical Length (ft) | Factored Capacity Φwℓ (k) | |
| 6.5 | 6 | 6 | 17.83 | 4 | 4 | 4.53 | 23.95 | 0.05169 | 6.30 | 75.79 | $28.63 |
| | | | | | 6 | 6.56 | 25.29 | 0.05159 | 6.99 | 84.18 | $29.98 |
| | | | | | 8 | 8.44 | 26.62 | 0.05148 | 7.56 | 91.01 | $31.34 |
| | | | | | 10 | 10.09 | 27.96 | 0.05138 | 8.02 | 96.50 | $32.69 |
| | | | | | 12 | 11.44 | 29.29 | 0.05128 | 8.36 | 100.67 | $34.05 |
| | | | | 5 | 4 | 6.75 | 25.45 | 0.05158 | 7.05 | 84.90 | $30.15 |
| | | | | | 6 | 9.53 | 27.54 | 0.05142 | 7.87 | 94.68 | $32.26 |
| | | | | | 8 | 11.69 | 29.62 | 0.05126 | 8.43 | 101.42 | $34.38 |
| | | | | | 10 | 13.09 | 31.71 | 0.05110 | 8.77 | 105.51 | $36.49 |
| | | | | | 12 | 14.31 | 33.79 | 0.05094 | 9.05 | 108.90 | $38.61 |
| | | | | 6 | 4 | 9.13 | 27.29 | 0.05144 | 7.75 | 93.34 | $32.01 |
| | | | | | 6 | 12.09 | 30.29 | 0.05122 | 8.53 | 102.62 | $35.06 |
| | | | | | 8 | 13.94 | 33.29 | 0.05099 | 8.96 | 107.87 | $38.10 |
| | | | | | 10 | 15.56 | 36.30 | 0.05076 | 9.32 | 112.24 | $41.15 |
| | | | | | 12 | 16.97 | 39.30 | 0.05054 | 9.62 | 115.85 | $44.19 |
| | | 12 | 11.00 | 4 | 4 | 4.53 | 13.31 | 0.05249 | 7.24 | 53.74 | $17.84 |
| | | | | | 6 | 6.56 | 14.65 | 0.05239 | 8.16 | 60.58 | $19.20 |
| | | | | | 8 | 8.44 | 15.98 | 0.05228 | 8.90 | 66.10 | $20.55 |
| | | | | | 10 | 10.09 | 17.32 | 0.05218 | 9.50 | 70.51 | $21.91 |
| | | | | | 12 | 11.44 | 18.66 | 0.05208 | 9.95 | 73.85 | $23.26 |
| | | | | 5 | 4 | 6.75 | 14.81 | 0.05238 | 8.24 | 61.17 | $19.36 |
| | | | | | 6 | 9.53 | 16.90 | 0.05222 | 9.30 | 69.05 | $21.48 |
| | | | | | 8 | 11.69 | 18.98 | 0.05206 | 10.03 | 74.46 | $23.59 |
| | | | | | 10 | 13.09 | 21.07 | 0.05190 | 10.47 | 77.73 | $25.71 |
| | | | | | 12 | 14.31 | 23.16 | 0.05174 | 10.83 | 80.43 | $27.82 |
| | | | | 6 | 4 | 9.13 | 16.65 | 0.05224 | 9.15 | 67.97 | $21.22 |
| | | | | | 6 | 12.09 | 19.65 | 0.05202 | 10.16 | 75.42 | $24.27 |
| | | | | | 8 | 13.94 | 22.66 | 0.05179 | 10.72 | 79.61 | $27.32 |
| | | | | | 10 | 15.56 | 25.66 | 0.05156 | 11.19 | 83.10 | $30.36 |
| | | | | | 12 | 16.97 | 28.66 | 0.05134 | 11.58 | 85.97 | $33.41 |
| | | 18 | 8.28 | 4 | 4 | 4.53 | 9.76 | 0.05276 | 7.93 | 44.30 | $14.25 |
| | | | | | 6 | 6.56 | 11.10 | 0.05265 | 9.01 | 50.33 | $15.60 |
| | | | | | 8 | 8.44 | 12.44 | 0.05255 | 9.87 | 55.17 | $16.96 |
| | | | | | 10 | 10.09 | 13.77 | 0.05245 | 10.57 | 59.04 | $18.31 |
| | | | | | 12 | 11.44 | 15.11 | 0.05235 | 11.09 | 61.96 | $19.66 |
| | | | | 5 | 4 | 6.75 | 11.26 | 0.05264 | 9.10 | 50.84 | $15.77 |
| | | | | | 6 | 9.53 | 13.35 | 0.05249 | 10.34 | 57.76 | $17.88 |
| | | | | | 8 | 11.69 | 15.44 | 0.05233 | 11.18 | 62.48 | $20.00 |
| | | | | | 10 | 13.09 | 17.52 | 0.05217 | 11.69 | 65.34 | $22.11 |
| | | | | | 12 | 14.31 | 19.61 | 0.05201 | 12.12 | 67.71 | $24.23 |
| | | | | 6 | 4 | 9.13 | 13.10 | 0.05251 | 10.17 | 56.81 | $17.63 |
| | | | | | 6 | 12.09 | 16.10 | 0.05228 | 11.33 | 63.33 | $20.67 |
| | | | | | 8 | 13.94 | 19.11 | 0.05206 | 11.99 | 66.99 | $23.72 |
| | | | | | 10 | 15.56 | 22.11 | 0.05183 | 12.53 | 70.03 | $26.77 |
| | | | | | 12 | 16.97 | 25.12 | 0.05161 | 12.98 | 72.54 | $29.81 |
| | | 24 | 6.46 | 4 | 4 | 4.53 | 7.99 | 0.05289 | 8.63 | 37.61 | $12.45 |
| | | | | | 6 | 6.56 | 9.33 | 0.05279 | 9.86 | 42.99 | $13.80 |
| | | | | | 8 | 8.44 | 10.66 | 0.05269 | 10.85 | 47.30 | $15.16 |
| | | | | | 10 | 10.09 | 12.00 | 0.05258 | 11.64 | 50.74 | $16.51 |
| | | | | | 12 | 11.44 | 13.34 | 0.05248 | 12.23 | 53.34 | $17.87 |
| | | | | 5 | 4 | 6.75 | 9.49 | 0.05278 | 9.97 | 43.45 | $13.97 |
| | | | | | 6 | 9.53 | 11.58 | 0.05262 | 11.38 | 49.60 | $16.08 |
| | | | | | 8 | 11.69 | 13.66 | 0.05246 | 12.34 | 53.80 | $18.20 |
| | | | | | 10 | 13.09 | 15.75 | 0.05230 | 12.92 | 56.34 | $20.31 |
| | | | | | 12 | 14.31 | 17.84 | 0.05214 | 13.40 | 58.44 | $22.43 |
| | | | | 6 | 4 | 9.13 | 11.33 | 0.05264 | 11.19 | 48.76 | $15.83 |
| | | | | | 6 | 12.09 | 14.33 | 0.05242 | 12.51 | 54.55 | $18.88 |
| | | | | | 8 | 13.94 | 17.34 | 0.05219 | 13.26 | 57.80 | $21.92 |
| | | | | | 10 | 15.56 | 20.34 | 0.05197 | 13.88 | 60.50 | $24.97 |
| | | | | | 12 | 16.97 | 23.34 | 0.05174 | 14.39 | 62.72 | $28.01 |

Black = Acceptable Design
Gray = Inadequate Structural Capacity

## Table A-1. Calculated Ultimate Strengths and Costs for Barrier Configurations

| Barrier Width (in.) | Stirrups | | Mc (k-ft/ft) | Longitudinal Bars | | Mw (k-ft/ft) | Steel (lb. / ft) | Concrete ($yd^3$/ft) | Yield Line Calculations | | Total Cost ($/ft) |
|---|---|---|---|---|---|---|---|---|---|---|---|
| | Bar No. | Spacing (in.) | | Bar No. | Quantity | | | | Critical Length (ft) | Factored Capacity Φwℓ (k) | |
| 7 | 4 | 6 | 11.33 | 4 | 4 | 4.91 | 12.14 | 0.05668 | 7.35 | 56.23 | $16.98 |
| | | | | | 6 | 7.13 | 13.47 | 0.05658 | 8.31 | 63.54 | $18.34 |
| | | | | | 8 | 9.19 | 14.81 | 0.05647 | 9.08 | 69.46 | $19.69 |
| | | | | | 10 | 11.00 | 16.14 | 0.05637 | 9.70 | 74.17 | $21.05 |
| | | | | | 12 | 12.41 | 17.48 | 0.05627 | 10.14 | 77.58 | $22.40 |
| | | | | 5 | 4 | 7.34 | 13.64 | 0.05657 | 8.39 | 64.20 | $18.50 |
| | | | | | 6 | 10.41 | 15.72 | 0.05641 | 9.50 | 72.67 | $20.62 |
| | | | | | 8 | 12.69 | 17.81 | 0.05625 | 10.23 | 78.24 | $22.73 |
| | | | | | 10 | 14.50 | 19.89 | 0.05609 | 10.76 | 82.33 | $24.85 |
| | | | | | 12 | 16.25 | 21.98 | 0.05593 | 11.25 | 86.07 | $26.96 |
| | | | | 6 | 4 | 9.94 | 15.47 | 0.05643 | 9.34 | 71.45 | $20.37 |
| | | | | | 6 | 13.19 | 18.48 | 0.05621 | 10.38 | 79.39 | $23.41 |
| | | | | | 8 | 15.66 | 21.48 | 0.05598 | 11.09 | 84.82 | $26.46 |
| | | | | | 10 | 17.94 | 24.48 | 0.05575 | 11.70 | 89.48 | $29.50 |
| | | | | | 12 | 20.09 | 27.49 | 0.05553 | 12.24 | 93.64 | $32.55 |
| | | 12 | 6.42 | 4 | 4 | 4.91 | 7.40 | 0.05704 | 8.89 | 38.51 | $12.19 |
| | | | | | 6 | 7.13 | 8.74 | 0.05694 | 10.20 | 44.16 | $13.54 |
| | | | | | 8 | 9.19 | 10.08 | 0.05684 | 11.24 | 48.70 | $14.90 |
| | | | | | 10 | 11.00 | 11.41 | 0.05673 | 12.08 | 52.30 | $16.25 |
| | | | | | 12 | 12.41 | 12.75 | 0.05663 | 12.68 | 54.91 | $17.60 |
| | | | | 5 | 4 | 7.34 | 8.90 | 0.05693 | 10.31 | 44.67 | $13.71 |
| | | | | | 6 | 10.41 | 10.99 | 0.05677 | 11.81 | 51.16 | $15.82 |
| | | | | | 8 | 12.69 | 13.08 | 0.05661 | 12.79 | 55.41 | $17.94 |
| | | | | | 10 | 14.50 | 15.16 | 0.05645 | 13.51 | 58.53 | $20.05 |
| | | | | | 12 | 16.25 | 17.25 | 0.05629 | 14.17 | 61.37 | $22.17 |
| | | | | 6 | 4 | 9.94 | 10.74 | 0.05680 | 11.60 | 50.23 | $15.57 |
| | | | | | 6 | 13.19 | 13.74 | 0.05657 | 13.00 | 56.29 | $18.61 |
| | | | | | 8 | 15.66 | 16.75 | 0.05634 | 13.95 | 60.42 | $21.66 |
| | | | | | 10 | 17.94 | 19.75 | 0.05612 | 14.77 | 63.97 | $24.71 |
| | | | | | 12 | 20.09 | 22.76 | 0.05589 | 15.50 | 67.12 | $27.75 |
| | | 18 | 4.39 | 4 | 4 | 4.91 | 5.83 | 0.05716 | 10.22 | 30.28 | $10.59 |
| | | | | | 6 | 7.13 | 7.16 | 0.05706 | 11.82 | 35.00 | $11.94 |
| | | | | | 8 | 9.19 | 8.50 | 0.05696 | 13.09 | 38.79 | $13.30 |
| | | | | | 10 | 11.00 | 9.83 | 0.05686 | 14.11 | 41.79 | $14.65 |
| | | | | | 12 | 12.41 | 11.17 | 0.05675 | 14.84 | 43.96 | $16.01 |
| | | | | 5 | 4 | 7.34 | 7.33 | 0.05705 | 11.96 | 35.43 | $12.11 |
| | | | | | 6 | 10.41 | 9.41 | 0.05689 | 13.78 | 40.84 | $14.22 |
| | | | | | 8 | 12.69 | 11.50 | 0.05673 | 14.98 | 44.38 | $16.34 |
| | | | | | 10 | 14.50 | 13.58 | 0.05657 | 15.85 | 46.97 | $18.45 |
| | | | | | 12 | 16.25 | 15.67 | 0.05641 | 16.65 | 49.33 | $20.57 |
| | | | | 6 | 4 | 9.94 | 9.16 | 0.05692 | 13.52 | 40.07 | $13.97 |
| | | | | | 6 | 13.19 | 12.17 | 0.05669 | 15.23 | 45.11 | $17.02 |
| | | | | | 8 | 15.66 | 15.17 | 0.05646 | 16.39 | 48.54 | $20.06 |
| | | | | | 10 | 17.94 | 18.17 | 0.05624 | 17.38 | 51.48 | $23.11 |
| | | | | | 12 | 20.09 | 21.18 | 0.05601 | 18.26 | 54.10 | $26.15 |
| | | 24 | 3.33 | 4 | 4 | 4.91 | 5.04 | 0.05723 | 11.37 | 25.57 | $9.79 |
| | | | | | 6 | 7.13 | 6.37 | 0.05712 | 13.21 | 29.72 | $11.14 |
| | | | | | 8 | 9.19 | 7.71 | 0.05702 | 14.68 | 33.03 | $12.50 |
| | | | | | 10 | 11.00 | 9.05 | 0.05692 | 15.85 | 35.66 | $13.85 |
| | | | | | 12 | 12.41 | 10.38 | 0.05681 | 16.69 | 37.55 | $15.21 |
| | | | | 5 | 4 | 7.34 | 6.54 | 0.05711 | 13.37 | 30.09 | $11.31 |
| | | | | | 6 | 10.41 | 8.62 | 0.05695 | 15.48 | 34.82 | $13.42 |
| | | | | | 8 | 12.69 | 10.71 | 0.05679 | 16.85 | 37.91 | $15.54 |
| | | | | | 10 | 14.50 | 12.80 | 0.05663 | 17.86 | 40.18 | $17.65 |
| | | | | | 12 | 16.25 | 14.88 | 0.05647 | 18.77 | 42.24 | $19.77 |
| | | | | 6 | 4 | 9.94 | 8.37 | 0.05698 | 15.18 | 34.15 | $13.17 |
| | | | | | 6 | 13.19 | 11.38 | 0.05675 | 17.13 | 38.55 | $16.22 |
| | | | | | 8 | 15.66 | 14.38 | 0.05653 | 18.47 | 41.55 | $19.26 |
| | | | | | 10 | 17.94 | 17.39 | 0.05630 | 19.61 | 44.12 | $22.31 |
| | | | | | 12 | 20.09 | 20.39 | 0.05607 | 20.63 | 46.41 | $25.35 |

Black = Acceptable Design
Gray = Inadequate Structural Capacity

## Table A-1. Calculated Ultimate Strengths and Costs for Barrier Configurations

| Barrier Width (in.) | Stirrups | | Mc (k-ft/ft) | Longitudinal Bars | | Mw (k-ft/ft) | Steel (lb. / ft) | Concrete ($yd^3$/ft) | Yield Line Calculations | | Total Cost ($/ft) |
|---|---|---|---|---|---|---|---|---|---|---|---|
| | Bar No. | Spacing (in.) | | Bar No. | Quantity | | | | Critical Length (ft) | Factored Capacity Φwℓ (k) | |
| 7 | 5 | 6 | 15.50 | 4 | 4 | 4.91 | 17.45 | 0.05628 | 6.69 | 70.01 | $22.37 |
| | | | | | 6 | 7.13 | 18.78 | 0.05617 | 7.49 | 78.37 | $23.72 |
| | | | | | 8 | 9.19 | 20.12 | 0.05607 | 8.14 | 85.18 | $25.08 |
| | | | | | 10 | 11.03 | 21.46 | 0.05597 | 8.67 | 90.71 | $26.43 |
| | | | | | 12 | 12.47 | 22.79 | 0.05587 | 9.05 | 94.73 | $27.79 |
| | | | | 5 | 4 | 7.34 | 18.95 | 0.05616 | 7.56 | 79.13 | $23.89 |
| | | | | | 6 | 10.41 | 21.03 | 0.05601 | 8.50 | 88.89 | $26.00 |
| | | | | | 8 | 12.75 | 23.12 | 0.05585 | 9.13 | 95.49 | $28.12 |
| | | | | | 10 | 14.53 | 25.21 | 0.05569 | 9.57 | 100.15 | $30.23 |
| | | | | | 12 | 16.16 | 27.29 | 0.05553 | 9.96 | 104.16 | $32.35 |
| | | | | 6 | 4 | 9.94 | 20.78 | 0.05603 | 8.36 | 87.49 | $25.75 |
| | | | | | 6 | 13.28 | 23.79 | 0.05580 | 9.26 | 96.91 | $28.80 |
| | | | | | 8 | 15.59 | 26.79 | 0.05558 | 9.83 | 102.80 | $31.84 |
| | | | | | 10 | 17.72 | 29.80 | 0.05535 | 10.31 | 107.85 | $34.89 |
| | | | | | 12 | 19.72 | 32.80 | 0.05513 | 10.74 | 112.36 | $37.93 |
| | | 12 | 9.33 | 4 | 4 | 4.91 | 10.06 | 0.05684 | 7.82 | 49.28 | $14.88 |
| | | | | | 6 | 7.13 | 11.40 | 0.05674 | 8.89 | 55.99 | $16.23 |
| | | | | | 8 | 9.19 | 12.73 | 0.05664 | 9.75 | 61.40 | $17.59 |
| | | | | | 10 | 11.03 | 14.07 | 0.05653 | 10.44 | 65.77 | $18.94 |
| | | | | | 12 | 12.47 | 15.40 | 0.05643 | 10.94 | 68.95 | $20.30 |
| | | | | 5 | 4 | 7.34 | 11.56 | 0.05673 | 8.98 | 56.59 | $16.40 |
| | | | | | 6 | 10.41 | 13.65 | 0.05657 | 10.21 | 64.33 | $18.52 |
| | | | | | 8 | 12.75 | 15.73 | 0.05641 | 11.04 | 69.55 | $20.63 |
| | | | | | 10 | 14.53 | 17.82 | 0.05625 | 11.62 | 73.21 | $22.74 |
| | | | | | 12 | 16.16 | 19.90 | 0.05609 | 12.12 | 76.38 | $24.86 |
| | | | | 6 | 4 | 9.94 | 13.40 | 0.05660 | 10.04 | 63.22 | $18.26 |
| | | | | | 6 | 13.28 | 16.40 | 0.05637 | 11.22 | 70.67 | $21.31 |
| | | | | | 8 | 15.59 | 19.40 | 0.05614 | 11.95 | 75.30 | $24.35 |
| | | | | | 10 | 17.72 | 22.41 | 0.05592 | 12.58 | 79.27 | $27.40 |
| | | | | | 12 | 19.72 | 25.41 | 0.05569 | 13.14 | 82.81 | $30.44 |
| | | 18 | 6.61 | 4 | 4 | 4.91 | 7.60 | 0.05703 | 8.80 | 39.26 | $12.38 |
| | | | | | 6 | 7.13 | 8.93 | 0.05693 | 10.08 | 44.99 | $13.74 |
| | | | | | 8 | 9.19 | 10.27 | 0.05683 | 11.11 | 49.59 | $15.09 |
| | | | | | 10 | 11.03 | 11.61 | 0.05672 | 11.95 | 53.31 | $16.45 |
| | | | | | 12 | 12.47 | 12.94 | 0.05662 | 12.55 | 56.00 | $17.80 |
| | | | | 5 | 4 | 7.34 | 9.10 | 0.05692 | 10.20 | 45.50 | $13.90 |
| | | | | | 6 | 10.41 | 11.18 | 0.05676 | 11.67 | 52.09 | $16.02 |
| | | | | | 8 | 12.75 | 13.27 | 0.05660 | 12.66 | 56.51 | $18.13 |
| | | | | | 10 | 14.53 | 15.36 | 0.05644 | 13.36 | 59.62 | $20.25 |
| | | | | | 12 | 16.16 | 17.44 | 0.05628 | 13.96 | 62.29 | $22.36 |
| | | | | 6 | 4 | 9.94 | 10.93 | 0.05678 | 11.46 | 51.15 | $15.77 |
| | | | | | 6 | 13.28 | 13.94 | 0.05656 | 12.88 | 57.46 | $18.81 |
| | | | | | 8 | 15.59 | 16.94 | 0.05633 | 13.76 | 61.38 | $21.86 |
| | | | | | 10 | 17.72 | 19.95 | 0.05610 | 14.51 | 64.75 | $24.90 |
| | | | | | 12 | 19.72 | 22.95 | 0.05588 | 15.18 | 67.74 | $27.95 |
| | | 24 | 5.08 | 4 | 4 | 4.91 | 6.37 | 0.05713 | 9.68 | 33.20 | $11.13 |
| | | | | | 6 | 7.13 | 7.70 | 0.05702 | 11.15 | 38.26 | $12.49 |
| | | | | | 8 | 9.19 | 9.04 | 0.05692 | 12.34 | 42.33 | $13.84 |
| | | | | | 10 | 11.03 | 10.37 | 0.05682 | 13.29 | 45.60 | $15.20 |
| | | | | | 12 | 12.47 | 11.71 | 0.05671 | 13.98 | 47.97 | $16.55 |
| | | | | 5 | 4 | 7.34 | 7.87 | 0.05701 | 11.28 | 38.72 | $12.66 |
| | | | | | 6 | 10.41 | 9.95 | 0.05685 | 12.98 | 44.52 | $14.77 |
| | | | | | 8 | 12.75 | 12.04 | 0.05669 | 14.11 | 48.42 | $16.89 |
| | | | | | 10 | 14.53 | 14.12 | 0.05653 | 14.91 | 51.15 | $19.00 |
| | | | | | 12 | 16.16 | 16.21 | 0.05637 | 15.59 | 53.51 | $21.11 |
| | | | | 6 | 4 | 9.94 | 9.70 | 0.05688 | 12.73 | 43.69 | $14.52 |
| | | | | | 6 | 13.28 | 12.71 | 0.05665 | 14.35 | 49.25 | $17.56 |
| | | | | | 8 | 15.59 | 15.71 | 0.05643 | 15.36 | 52.71 | $20.61 |
| | | | | | 10 | 17.72 | 18.71 | 0.05620 | 16.22 | 55.67 | $23.65 |
| | | | | | 12 | 19.72 | 21.72 | 0.05597 | 16.99 | 58.29 | $26.70 |

Black = Acceptable Design
Gray = Inadequate Structural Capacity

## Table A-1. Calculated Ultimate Strengths and Costs for Barrier Configurations

| Barrier Width (in.) | Stirrups | | Mc (k-ft/ft) | Longitudinal Bars | | Mw (k-ft/ft) | Steel (lb. / ft) | Concrete ($yd^3$/ft) | Yield Line Calculations | | Total Cost ($/ft) |
|---|---|---|---|---|---|---|---|---|---|---|---|
| | Bar No. | Spacing (in.) | | Bar No. | Quantity | | | | Critical Length (ft) | Factored Capacity Φwℓ (k) | |
| 7 | 6 | 6 | 20.00 | 4 | 4 | 4.91 | 23.95 | 0.05580 | 6.24 | 84.20 | $28.96 |
| | | | | | 6 | 7.13 | 25.29 | 0.05570 | 6.93 | 93.50 | $30.32 |
| | | | | | 8 | 9.19 | 26.62 | 0.05560 | 7.49 | 101.11 | $31.67 |
| | | | | | 10 | 11.03 | 27.96 | 0.05550 | 7.95 | 107.30 | $33.03 |
| | | | | | 12 | 12.56 | 29.29 | 0.05539 | 8.30 | 112.10 | $34.38 |
| | | | | 5 | 4 | 7.34 | 25.45 | 0.05569 | 6.99 | 94.35 | $30.48 |
| | | | | | 6 | 10.41 | 27.54 | 0.05553 | 7.80 | 105.25 | $32.60 |
| | | | | | 8 | 12.91 | 29.62 | 0.05537 | 8.38 | 113.14 | $34.71 |
| | | | | | 10 | 14.56 | 31.71 | 0.05521 | 8.74 | 117.98 | $36.83 |
| | | | | | 12 | 16.06 | 33.79 | 0.05505 | 9.05 | 122.16 | $38.94 |
| | | | | 6 | 4 | 9.94 | 27.29 | 0.05556 | 7.68 | 103.69 | $32.35 |
| | | | | | 6 | 13.38 | 30.29 | 0.05533 | 8.48 | 114.54 | $35.39 |
| | | | | | 8 | 15.59 | 33.29 | 0.05510 | 8.95 | 120.88 | $38.44 |
| | | | | | 10 | 17.56 | 36.30 | 0.05488 | 9.35 | 126.16 | $41.48 |
| | | | | | 12 | 19.38 | 39.30 | 0.05465 | 9.69 | 130.79 | $44.53 |
| | | 12 | 12.08 | 4 | 4 | 4.91 | 13.31 | 0.05661 | 7.21 | 58.77 | $18.18 |
| | | | | | 6 | 7.13 | 14.65 | 0.05650 | 8.13 | 66.29 | $19.53 |
| | | | | | 8 | 9.19 | 15.98 | 0.05640 | 8.87 | 72.38 | $20.89 |
| | | | | | 10 | 11.03 | 17.32 | 0.05630 | 9.48 | 77.31 | $22.24 |
| | | | | | 12 | 12.56 | 18.66 | 0.05619 | 9.95 | 81.13 | $23.59 |
| | | | | 5 | 4 | 7.34 | 14.81 | 0.05649 | 8.21 | 66.97 | $19.70 |
| | | | | | 6 | 10.41 | 16.90 | 0.05633 | 9.28 | 75.69 | $21.81 |
| | | | | | 8 | 12.91 | 18.98 | 0.05617 | 10.05 | 81.95 | $23.93 |
| | | | | | 10 | 14.56 | 21.07 | 0.05601 | 10.52 | 85.79 | $26.04 |
| | | | | | 12 | 16.06 | 23.16 | 0.05585 | 10.92 | 89.09 | $28.16 |
| | | | | 6 | 4 | 9.94 | 16.65 | 0.05636 | 9.13 | 74.44 | $21.56 |
| | | | | | 6 | 13.38 | 19.65 | 0.05613 | 10.18 | 83.06 | $24.60 |
| | | | | | 8 | 15.59 | 22.66 | 0.05591 | 10.80 | 88.08 | $27.65 |
| | | | | | 10 | 17.56 | 25.66 | 0.05568 | 11.31 | 92.25 | $30.70 |
| | | | | | 12 | 19.38 | 28.66 | 0.05545 | 11.76 | 95.90 | $33.74 |
| | | 18 | 9.00 | 4 | 4 | 4.91 | 9.76 | 0.05687 | 7.92 | 48.10 | $14.58 |
| | | | | | 6 | 7.13 | 11.10 | 0.05677 | 9.00 | 54.69 | $15.94 |
| | | | | | 8 | 9.19 | 12.44 | 0.05667 | 9.88 | 60.01 | $17.29 |
| | | | | | 10 | 11.03 | 13.77 | 0.05656 | 10.59 | 64.31 | $18.64 |
| | | | | | 12 | 12.56 | 15.11 | 0.05646 | 11.13 | 67.63 | $20.00 |
| | | | | 5 | 4 | 7.34 | 11.26 | 0.05676 | 9.10 | 55.29 | $16.10 |
| | | | | | 6 | 10.41 | 13.35 | 0.05660 | 10.35 | 62.90 | $18.22 |
| | | | | | 8 | 12.91 | 15.44 | 0.05644 | 11.25 | 68.35 | $20.33 |
| | | | | | 10 | 14.56 | 17.52 | 0.05628 | 11.80 | 71.69 | $22.45 |
| | | | | | 12 | 16.06 | 19.61 | 0.05612 | 12.27 | 74.56 | $24.56 |
| | | | | 6 | 4 | 9.94 | 13.10 | 0.05663 | 10.17 | 61.81 | $17.96 |
| | | | | | 6 | 13.38 | 16.10 | 0.05640 | 11.41 | 69.31 | $21.01 |
| | | | | | 8 | 15.59 | 19.11 | 0.05617 | 12.13 | 73.68 | $24.06 |
| | | | | | 10 | 17.56 | 22.11 | 0.05595 | 12.72 | 77.30 | $27.10 |
| | | | | | 12 | 19.38 | 25.12 | 0.05572 | 13.25 | 80.47 | $30.15 |
| | | 24 | 7.00 | 4 | 4 | 4.91 | 7.99 | 0.05701 | 8.62 | 40.75 | $12.78 |
| | | | | | 6 | 7.13 | 9.33 | 0.05690 | 9.87 | 46.63 | $14.14 |
| | | | | | 8 | 9.19 | 10.66 | 0.05680 | 10.87 | 51.36 | $15.49 |
| | | | | | 10 | 11.03 | 12.00 | 0.05670 | 11.68 | 55.18 | $16.85 |
| | | | | | 12 | 12.56 | 13.34 | 0.05660 | 12.30 | 58.12 | $18.20 |
| | | | | 5 | 4 | 7.34 | 9.49 | 0.05689 | 9.98 | 47.16 | $14.30 |
| | | | | | 6 | 10.41 | 11.58 | 0.05673 | 11.41 | 53.92 | $16.42 |
| | | | | | 8 | 12.91 | 13.66 | 0.05657 | 12.43 | 58.76 | $18.53 |
| | | | | | 10 | 14.56 | 15.75 | 0.05642 | 13.06 | 61.71 | $20.65 |
| | | | | | 12 | 16.06 | 17.84 | 0.05626 | 13.60 | 64.26 | $22.76 |
| | | | | 6 | 4 | 9.94 | 11.33 | 0.05676 | 11.21 | 52.95 | $16.17 |
| | | | | | 6 | 13.38 | 14.33 | 0.05653 | 12.62 | 59.61 | $19.21 |
| | | | | | 8 | 15.59 | 17.34 | 0.05631 | 13.43 | 63.47 | $22.26 |
| | | | | | 10 | 17.56 | 20.34 | 0.05608 | 14.11 | 66.68 | $25.30 |
| | | | | | 12 | 19.38 | 23.34 | 0.05585 | 14.71 | 69.49 | $28.35 |

Black = Acceptable Design
Gray = Inadequate Structural Capacity

## Table A-1. Calculated Ultimate Strengths and Costs for Barrier Configurations

| Barrier Width (in.) | Stirrups | | Mc (k-ft/ft) | Longitudinal Bars | | Mw (k-ft/ft) | Steel (lb. / ft) | Concrete ($yd^3$/ft) | Yield Line Calculations | | Total Cost ($/ft) |
|---|---|---|---|---|---|---|---|---|---|---|---|
| | Bar No. | Spacing (in.) | | Bar No. | Quantity | | | | Critical Length (ft) | Factored Capacity Φwℓ (k) | |
| 7.5 | 4 | 6 | 12.33 | 4 | 4 | 5.28 | 12.14 | 0.06079 | 7.33 | 60.98 | $17.32 |
| | | | | | 6 | 7.69 | 13.47 | 0.06069 | 8.28 | 68.94 | $18.67 |
| | | | | | 8 | 9.94 | 14.81 | 0.06059 | 9.06 | 75.42 | $20.03 |
| | | | | | 10 | 11.94 | 16.14 | 0.06049 | 9.69 | 80.63 | $21.38 |
| | | | | | 12 | 13.53 | 17.48 | 0.06038 | 10.15 | 84.49 | $22.73 |
| | | | | 5 | 4 | 7.94 | 13.64 | 0.06068 | 8.37 | 69.70 | $18.84 |
| | | | | | 6 | 11.28 | 15.72 | 0.06052 | 9.49 | 78.97 | $20.95 |
| | | | | | 8 | 13.84 | 17.81 | 0.06036 | 10.24 | 85.23 | $23.07 |
| | | | | | 10 | 15.97 | 19.89 | 0.06020 | 10.81 | 90.01 | $25.18 |
| | | | | | 12 | 17.97 | 21.98 | 0.06004 | 11.32 | 94.25 | $27.30 |
| | | | | 6 | 4 | 10.78 | 15.47 | 0.06055 | 9.33 | 77.67 | $20.70 |
| | | | | | 6 | 14.44 | 18.48 | 0.06032 | 10.40 | 86.60 | $23.75 |
| | | | | | 8 | 17.31 | 21.48 | 0.06009 | 11.16 | 92.88 | $26.79 |
| | | | | | 10 | 20.00 | 24.48 | 0.05987 | 11.81 | 98.33 | $29.84 |
| | | | | | 12 | 22.56 | 27.49 | 0.05964 | 12.40 | 103.19 | $32.88 |
| | | 12 | 6.92 | 4 | 4 | 5.28 | 7.40 | 0.06116 | 8.89 | 41.49 | $12.52 |
| | | | | | 6 | 7.69 | 8.74 | 0.06106 | 10.20 | 47.62 | $13.88 |
| | | | | | 8 | 9.94 | 10.08 | 0.06095 | 11.26 | 52.57 | $15.23 |
| | | | | | 10 | 11.94 | 11.41 | 0.06085 | 12.11 | 56.53 | $16.58 |
| | | | | | 12 | 13.53 | 12.75 | 0.06075 | 12.74 | 59.47 | $17.94 |
| | | | | 5 | 4 | 7.94 | 8.90 | 0.06105 | 10.32 | 48.20 | $14.04 |
| | | | | | 6 | 11.28 | 10.99 | 0.06089 | 11.84 | 55.27 | $16.16 |
| | | | | | 8 | 13.84 | 13.08 | 0.06073 | 12.86 | 60.02 | $18.27 |
| | | | | | 10 | 15.97 | 15.16 | 0.06057 | 13.63 | 63.65 | $20.39 |
| | | | | | 12 | 17.97 | 17.25 | 0.06041 | 14.32 | 66.86 | $22.50 |
| | | | | 6 | 4 | 10.78 | 10.74 | 0.06091 | 11.63 | 54.28 | $15.90 |
| | | | | | 6 | 14.44 | 13.74 | 0.06069 | 13.08 | 61.06 | $18.95 |
| | | | | | 8 | 17.31 | 16.75 | 0.06046 | 14.10 | 65.83 | $21.99 |
| | | | | | 10 | 20.00 | 19.75 | 0.06023 | 14.98 | 69.94 | $25.04 |
| | | | | | 12 | 22.56 | 22.76 | 0.06001 | 15.77 | 73.62 | $28.09 |
| | | 18 | 4.72 | 4 | 4 | 5.28 | 5.83 | 0.06128 | 10.22 | 32.59 | $10.92 |
| | | | | | 6 | 7.69 | 7.16 | 0.06118 | 11.83 | 37.71 | $12.28 |
| | | | | | 8 | 9.94 | 8.50 | 0.06107 | 13.12 | 41.83 | $13.63 |
| | | | | | 10 | 11.94 | 9.83 | 0.06097 | 14.16 | 45.13 | $14.99 |
| | | | | | 12 | 13.53 | 11.17 | 0.06087 | 14.92 | 47.57 | $16.34 |
| | | | | 5 | 4 | 7.94 | 7.33 | 0.06117 | 11.98 | 38.19 | $12.44 |
| | | | | | 6 | 11.28 | 9.41 | 0.06101 | 13.83 | 44.08 | $14.56 |
| | | | | | 8 | 13.84 | 11.50 | 0.06085 | 15.07 | 48.03 | $16.67 |
| | | | | | 10 | 15.97 | 13.58 | 0.06069 | 16.01 | 51.04 | $18.79 |
| | | | | | 12 | 17.97 | 15.67 | 0.06053 | 16.85 | 53.70 | $20.90 |
| | | | | 6 | 4 | 10.78 | 9.16 | 0.06103 | 13.57 | 43.26 | $14.30 |
| | | | | | 6 | 14.44 | 12.17 | 0.06081 | 15.34 | 48.89 | $17.35 |
| | | | | | 8 | 17.31 | 15.17 | 0.06058 | 16.58 | 52.85 | $20.40 |
| | | | | | 10 | 20.00 | 18.17 | 0.06035 | 17.65 | 56.26 | $23.44 |
| | | | | | 12 | 22.56 | 21.18 | 0.06013 | 18.61 | 59.31 | $26.49 |
| | | 24 | 3.58 | 4 | 4 | 5.28 | 5.04 | 0.06134 | 11.37 | 27.51 | $10.12 |
| | | | | | 6 | 7.69 | 6.37 | 0.06124 | 13.23 | 31.99 | $11.48 |
| | | | | | 8 | 9.94 | 7.71 | 0.06113 | 14.72 | 35.60 | $12.83 |
| | | | | | 10 | 11.94 | 9.05 | 0.06103 | 15.91 | 38.49 | $14.19 |
| | | | | | 12 | 13.53 | 10.38 | 0.06093 | 16.79 | 40.62 | $15.54 |
| | | | | 5 | 4 | 7.94 | 6.54 | 0.06123 | 13.40 | 32.42 | $11.64 |
| | | | | | 6 | 11.28 | 8.62 | 0.06107 | 15.53 | 37.57 | $13.76 |
| | | | | | 8 | 13.84 | 10.71 | 0.06091 | 16.96 | 41.02 | $15.87 |
| | | | | | 10 | 15.97 | 12.80 | 0.06075 | 18.05 | 43.65 | $17.99 |
| | | | | | 12 | 17.97 | 14.88 | 0.06059 | 19.01 | 45.98 | $20.10 |
| | | | | 6 | 4 | 10.78 | 8.37 | 0.06109 | 15.23 | 36.85 | $13.51 |
| | | | | | 6 | 14.44 | 11.38 | 0.06087 | 17.27 | 41.77 | $16.55 |
| | | | | | 8 | 17.31 | 14.38 | 0.06064 | 18.70 | 45.23 | $19.60 |
| | | | | | 10 | 20.00 | 17.39 | 0.06041 | 19.93 | 48.21 | $22.64 |
| | | | | | 12 | 22.56 | 20.39 | 0.06019 | 21.03 | 50.87 | $25.69 |

Black = Acceptable Design
Gray = Inadequate Structural Capacity

## Table A-1. Calculated Ultimate Strengths and Costs for Barrier Configurations

| Barrier Width (in.) | Stirrups | | Mc (k-ft/ft) | Longitudinal Bars | | Mw (k-ft/ft) | Steel (lb. / ft) | Concrete ($yd^3$/ft) | Yield Line Calculations | | Total Cost ($/ft) |
|---|---|---|---|---|---|---|---|---|---|---|---|
| | Bar No. | Spacing (in.) | | Bar No. | Quantity | | | | Critical Length (ft) | Factored Capacity Φwℓ (k) | |
| 7.5 | 5 | 6 | 17.00 | 4 | 4 | 5.28 | 17.45 | 0.06039 | 6.66 | 76.37 | $22.70 |
| | | | | | 6 | 7.69 | 18.78 | 0.06029 | 7.45 | 85.51 | $24.06 |
| | | | | | 8 | 9.94 | 20.12 | 0.06019 | 8.10 | 92.99 | $25.41 |
| | | | | | 10 | 11.97 | 21.46 | 0.06008 | 8.64 | 99.11 | $26.77 |
| | | | | | 12 | 13.59 | 22.79 | 0.05998 | 9.03 | 103.68 | $28.12 |
| | | | | 5 | 4 | 7.94 | 18.95 | 0.06028 | 7.53 | 86.39 | $24.22 |
| | | | | | 6 | 11.28 | 21.03 | 0.06012 | 8.46 | 97.10 | $26.34 |
| | | | | | 8 | 13.94 | 23.12 | 0.05996 | 9.12 | 104.61 | $28.45 |
| | | | | | 10 | 15.97 | 25.21 | 0.05980 | 9.58 | 109.92 | $30.57 |
| | | | | | 12 | 17.88 | 27.29 | 0.05964 | 9.99 | 114.62 | $32.68 |
| | | | | 6 | 4 | 10.78 | 20.78 | 0.06015 | 8.33 | 95.60 | $26.09 |
| | | | | | 6 | 14.53 | 23.79 | 0.05992 | 9.25 | 106.20 | $29.13 |
| | | | | | 8 | 17.25 | 26.79 | 0.05969 | 9.86 | 113.10 | $32.18 |
| | | | | | 10 | 19.78 | 29.80 | 0.05947 | 10.38 | 119.09 | $35.22 |
| | | | | | 12 | 22.19 | 32.80 | 0.05924 | 10.85 | 124.46 | $38.27 |
| | | 12 | 10.17 | 4 | 4 | 5.28 | 10.06 | 0.06096 | 7.79 | 53.48 | $15.21 |
| | | | | | 6 | 7.69 | 11.40 | 0.06085 | 8.86 | 60.78 | $16.57 |
| | | | | | 8 | 9.94 | 12.73 | 0.06075 | 9.72 | 66.71 | $17.92 |
| | | | | | 10 | 11.97 | 14.07 | 0.06065 | 10.42 | 71.54 | $19.28 |
| | | | | | 12 | 13.59 | 15.40 | 0.06055 | 10.95 | 75.13 | $20.63 |
| | | | | 5 | 4 | 7.94 | 11.56 | 0.06084 | 8.96 | 61.48 | $16.73 |
| | | | | | 6 | 11.28 | 13.65 | 0.06069 | 10.19 | 69.95 | $18.85 |
| | | | | | 8 | 13.94 | 15.73 | 0.06053 | 11.05 | 75.86 | $20.96 |
| | | | | | 10 | 15.97 | 17.82 | 0.06037 | 11.66 | 80.03 | $23.08 |
| | | | | | 12 | 17.88 | 19.90 | 0.06021 | 12.20 | 83.72 | $25.19 |
| | | | | 6 | 4 | 10.78 | 13.40 | 0.06071 | 10.02 | 68.77 | $18.60 |
| | | | | | 6 | 14.53 | 16.40 | 0.06048 | 11.24 | 77.11 | $21.64 |
| | | | | | 8 | 17.25 | 19.40 | 0.06026 | 12.03 | 82.53 | $24.69 |
| | | | | | 10 | 19.78 | 22.41 | 0.06003 | 12.71 | 87.22 | $27.73 |
| | | | | | 12 | 22.19 | 25.41 | 0.05981 | 13.32 | 91.41 | $30.78 |
| | | 18 | 7.11 | 4 | 4 | 5.28 | 7.60 | 0.06115 | 8.80 | 42.24 | $12.72 |
| | | | | | 6 | 7.69 | 8.93 | 0.06104 | 10.09 | 48.45 | $14.07 |
| | | | | | 8 | 9.94 | 10.27 | 0.06094 | 11.14 | 53.46 | $15.43 |
| | | | | | 10 | 11.97 | 11.61 | 0.06084 | 11.99 | 57.54 | $16.78 |
| | | | | | 12 | 13.59 | 12.94 | 0.06073 | 12.62 | 60.57 | $18.13 |
| | | | | 5 | 4 | 7.94 | 9.10 | 0.06103 | 10.22 | 49.04 | $14.24 |
| | | | | | 6 | 11.28 | 11.18 | 0.06087 | 11.71 | 56.20 | $16.35 |
| | | | | | 8 | 13.94 | 13.27 | 0.06071 | 12.75 | 61.19 | $18.47 |
| | | | | | 10 | 15.97 | 15.36 | 0.06055 | 13.48 | 64.70 | $20.58 |
| | | | | | 12 | 17.88 | 17.44 | 0.06040 | 14.12 | 67.80 | $22.70 |
| | | | | 6 | 4 | 10.78 | 10.93 | 0.06090 | 11.50 | 55.20 | $16.10 |
| | | | | | 6 | 14.53 | 13.94 | 0.06067 | 12.97 | 62.24 | $19.15 |
| | | | | | 8 | 17.25 | 16.94 | 0.06045 | 13.92 | 66.80 | $22.19 |
| | | | | | 10 | 19.78 | 19.95 | 0.06022 | 14.74 | 70.74 | $25.24 |
| | | | | | 12 | 22.19 | 22.95 | 0.05999 | 15.47 | 74.27 | $28.28 |
| | | 24 | 5.46 | 4 | 4 | 5.28 | 6.37 | 0.06124 | 9.68 | 35.68 | $11.47 |
| | | | | | 6 | 7.69 | 7.70 | 0.06114 | 11.17 | 41.16 | $12.82 |
| | | | | | 8 | 9.94 | 9.04 | 0.06103 | 12.37 | 45.58 | $14.18 |
| | | | | | 10 | 11.97 | 10.37 | 0.06093 | 13.35 | 49.17 | $15.53 |
| | | | | | 12 | 13.59 | 11.71 | 0.06083 | 14.07 | 51.84 | $16.89 |
| | | | | 5 | 4 | 7.94 | 7.87 | 0.06113 | 11.31 | 41.68 | $12.99 |
| | | | | | 6 | 11.28 | 9.95 | 0.06097 | 13.03 | 47.99 | $15.10 |
| | | | | | 8 | 13.94 | 12.04 | 0.06081 | 14.22 | 52.38 | $17.22 |
| | | | | | 10 | 15.97 | 14.12 | 0.06065 | 15.05 | 55.47 | $19.33 |
| | | | | | 12 | 17.88 | 16.21 | 0.06049 | 15.79 | 58.19 | $21.45 |
| | | | | 6 | 4 | 10.78 | 9.70 | 0.06099 | 12.79 | 47.11 | $14.85 |
| | | | | | 6 | 14.53 | 12.71 | 0.06077 | 14.47 | 53.31 | $17.90 |
| | | | | | 8 | 17.25 | 15.71 | 0.06054 | 15.56 | 57.32 | $20.94 |
| | | | | | 10 | 19.78 | 18.71 | 0.06031 | 16.50 | 60.78 | $23.99 |
| | | | | | 12 | 22.19 | 21.72 | 0.06009 | 17.34 | 63.88 | $27.03 |

Black = Acceptable Design
Gray = Inadequate Structural Capacity

## Table A-1. Calculated Ultimate Strengths and Costs for Barrier Configurations

| Barrier Width (in.) | Stirrups | | Mc (k-ft/ft) | Longitudinal Bars | | Mw (k-ft/ft) | Steel (lb. / ft) | Concrete ($yd^3$/ft) | Yield Line Calculations | | Total Cost ($/ft) |
|---|---|---|---|---|---|---|---|---|---|---|---|
| | Bar No. | Spacing (in.) | | Bar No. | Quantity | | | | Critical Length (ft) | Factored Capacity Φwℓ (k) | |
| 7.5 | 6 | 6 | 22.17 | 4 | 4 | 5.28 | 23.95 | 0.05992 | 6.19 | 92.61 | $29.30 |
| | | | | | 6 | 7.69 | 25.29 | 0.05982 | 6.87 | 102.81 | $30.65 |
| | | | | | 8 | 9.94 | 26.62 | 0.05971 | 7.43 | 111.20 | $32.01 |
| | | | | | 10 | 11.97 | 27.96 | 0.05961 | 7.89 | 118.09 | $33.36 |
| | | | | | 12 | 13.69 | 29.29 | 0.05951 | 8.26 | 123.52 | $34.72 |
| | | | | 5 | 4 | 7.94 | 25.45 | 0.05981 | 6.94 | 103.79 | $30.82 |
| | | | | | 6 | 11.28 | 27.54 | 0.05965 | 7.74 | 115.82 | $32.93 |
| | | | | | 8 | 14.00 | 29.62 | 0.05949 | 8.32 | 124.47 | $35.05 |
| | | | | | 10 | 16.00 | 31.71 | 0.05933 | 8.71 | 130.37 | $37.16 |
| | | | | | 12 | 17.81 | 33.79 | 0.05917 | 9.05 | 135.42 | $39.28 |
| | | | | 6 | 4 | 10.78 | 27.29 | 0.05967 | 7.63 | 114.13 | $32.68 |
| | | | | | 6 | 14.59 | 30.29 | 0.05945 | 8.44 | 126.26 | $35.73 |
| | | | | | 8 | 17.25 | 33.29 | 0.05922 | 8.95 | 133.88 | $38.77 |
| | | | | | 10 | 19.63 | 36.30 | 0.05899 | 9.37 | 140.25 | $41.82 |
| | | | | | 12 | 21.88 | 39.30 | 0.05877 | 9.76 | 145.96 | $44.86 |
| | | 12 | 13.17 | 4 | 4 | 5.28 | 13.31 | 0.06072 | 7.18 | 63.80 | $18.51 |
| | | | | | 6 | 7.69 | 14.65 | 0.06062 | 8.10 | 71.99 | $19.87 |
| | | | | | 8 | 9.94 | 15.98 | 0.06052 | 8.85 | 78.66 | $21.22 |
| | | | | | 10 | 11.97 | 17.32 | 0.06041 | 9.46 | 84.11 | $22.57 |
| | | | | | 12 | 13.69 | 18.66 | 0.06031 | 9.95 | 88.40 | $23.93 |
| | | | | 5 | 4 | 7.94 | 14.81 | 0.06061 | 8.19 | 72.77 | $20.03 |
| | | | | | 6 | 11.28 | 16.90 | 0.06045 | 9.26 | 82.32 | $22.15 |
| | | | | | 8 | 14.00 | 18.98 | 0.06029 | 10.03 | 89.15 | $24.26 |
| | | | | | 10 | 16.00 | 21.07 | 0.06013 | 10.55 | 93.78 | $26.38 |
| | | | | | 12 | 17.81 | 23.16 | 0.05997 | 11.00 | 97.74 | $28.49 |
| | | | | 6 | 4 | 10.78 | 16.65 | 0.06047 | 9.11 | 80.98 | $21.89 |
| | | | | | 6 | 14.59 | 19.65 | 0.06025 | 10.19 | 90.55 | $24.94 |
| | | | | | 8 | 17.25 | 22.66 | 0.06002 | 10.86 | 96.53 | $27.99 |
| | | | | | 10 | 19.63 | 25.66 | 0.05980 | 11.42 | 101.52 | $31.03 |
| | | | | | 12 | 21.88 | 28.66 | 0.05957 | 11.93 | 105.99 | $34.08 |
| | | 18 | 9.72 | 4 | 4 | 5.28 | 9.76 | 0.06099 | 7.91 | 51.90 | $14.92 |
| | | | | | 6 | 7.69 | 11.10 | 0.06089 | 9.00 | 59.05 | $16.27 |
| | | | | | 8 | 9.94 | 12.44 | 0.06078 | 9.88 | 64.86 | $17.62 |
| | | | | | 10 | 11.97 | 13.77 | 0.06068 | 10.60 | 69.59 | $18.98 |
| | | | | | 12 | 13.69 | 15.11 | 0.06058 | 11.17 | 73.30 | $20.33 |
| | | | | 5 | 4 | 7.94 | 11.26 | 0.06088 | 9.10 | 59.74 | $16.44 |
| | | | | | 6 | 11.28 | 13.35 | 0.06072 | 10.37 | 68.04 | $18.55 |
| | | | | | 8 | 14.00 | 15.44 | 0.06056 | 11.27 | 73.95 | $20.67 |
| | | | | | 10 | 16.00 | 17.52 | 0.06040 | 11.88 | 77.97 | $22.78 |
| | | | | | 12 | 17.81 | 19.61 | 0.06024 | 12.40 | 81.40 | $24.90 |
| | | | | 6 | 4 | 10.78 | 13.10 | 0.06074 | 10.19 | 66.88 | $18.30 |
| | | | | | 6 | 14.59 | 16.10 | 0.06051 | 11.45 | 75.17 | $21.34 |
| | | | | | 8 | 17.25 | 19.11 | 0.06029 | 12.24 | 80.35 | $24.39 |
| | | | | | 10 | 19.63 | 22.11 | 0.06006 | 12.90 | 84.66 | $27.44 |
| | | | | | 12 | 21.88 | 25.12 | 0.05984 | 13.49 | 88.52 | $30.48 |
| | | 24 | 7.54 | 4 | 4 | 5.28 | 7.99 | 0.06112 | 8.62 | 43.89 | $13.12 |
| | | | | | 6 | 7.69 | 9.33 | 0.06102 | 9.87 | 50.26 | $14.47 |
| | | | | | 8 | 9.94 | 10.66 | 0.06092 | 10.89 | 55.42 | $15.83 |
| | | | | | 10 | 11.97 | 12.00 | 0.06081 | 11.71 | 59.61 | $17.18 |
| | | | | | 12 | 13.69 | 13.34 | 0.06071 | 12.36 | 62.90 | $18.54 |
| | | | | 5 | 4 | 7.94 | 9.49 | 0.06101 | 9.99 | 50.87 | $14.64 |
| | | | | | 6 | 11.28 | 11.58 | 0.06085 | 11.44 | 58.23 | $16.75 |
| | | | | | 8 | 14.00 | 13.66 | 0.06069 | 12.47 | 63.48 | $18.87 |
| | | | | | 10 | 16.00 | 15.75 | 0.06053 | 13.17 | 67.03 | $20.98 |
| | | | | | 12 | 17.81 | 17.84 | 0.06037 | 13.76 | 70.06 | $23.10 |
| | | | | 6 | 4 | 10.78 | 11.33 | 0.06087 | 11.24 | 57.20 | $16.50 |
| | | | | | 6 | 14.59 | 14.33 | 0.06065 | 12.68 | 64.55 | $19.55 |
| | | | | | 8 | 17.25 | 17.34 | 0.06042 | 13.58 | 69.14 | $22.59 |
| | | | | | 10 | 19.63 | 20.34 | 0.06020 | 14.33 | 72.95 | $25.64 |
| | | | | | 12 | 21.88 | 23.34 | 0.05997 | 15.00 | 76.36 | $28.68 |

Black = Acceptable Design
Gray = Inadequate Structural Capacity

## Table A-1. Calculated Ultimate Strengths and Costs for Barrier Configurations

| Barrier Width (in.) | Stirrups | | Mc (k-ft/ft) | Longitudinal Bars | | Mw (k-ft/ft) | Steel (lb. / ft) | Concrete ($yd^3$/ft) | Yield Line Calculations | | Total Cost ($/ft) |
|---|---|---|---|---|---|---|---|---|---|---|---|
| | Bar No. | Spacing (in.) | | Bar No. | Quantity | | | | Critical Length (ft) | Factored Capacity Φwℓ (k) | |
| 8 | 4 | 6 | 13.33 | 4 | 4 | 5.66 | 12.14 | 0.06491 | 7.30 | 65.74 | $17.65 |
| | | | | | 6 | 8.25 | 13.47 | 0.06481 | 8.26 | 74.35 | $19.01 |
| | | | | | 8 | 10.69 | 14.81 | 0.06470 | 9.04 | 81.38 | $20.36 |
| | | | | | 10 | 12.88 | 16.14 | 0.06460 | 9.68 | 87.09 | $21.71 |
| | | | | | 12 | 14.66 | 17.48 | 0.06450 | 10.16 | 91.41 | $23.07 |
| | | | | 5 | 4 | 8.50 | 13.64 | 0.06480 | 8.35 | 75.11 | $19.17 |
| | | | | | 6 | 12.16 | 15.72 | 0.06464 | 9.47 | 85.27 | $21.29 |
| | | | | | 8 | 15.00 | 17.81 | 0.06448 | 10.25 | 92.22 | $23.40 |
| | | | | | 10 | 17.41 | 19.89 | 0.06432 | 10.85 | 97.62 | $25.52 |
| | | | | | 12 | 19.72 | 21.98 | 0.06416 | 11.39 | 102.49 | $27.63 |
| | | | | 6 | 4 | 11.59 | 15.47 | 0.06466 | 9.31 | 83.81 | $21.03 |
| | | | | | 6 | 15.69 | 18.48 | 0.06444 | 10.42 | 93.80 | $24.08 |
| | | | | | 8 | 18.97 | 21.48 | 0.06421 | 11.22 | 100.94 | $27.13 |
| | | | | | 10 | 22.06 | 24.48 | 0.06398 | 11.91 | 107.16 | $30.17 |
| | | | | | 12 | 25.03 | 27.49 | 0.06376 | 12.53 | 112.74 | $33.22 |
| | | 12 | 7.42 | 4 | 4 | 5.66 | 7.40 | 0.06527 | 8.88 | 44.47 | $12.86 |
| | | | | | 6 | 8.25 | 8.74 | 0.06517 | 10.20 | 51.08 | $14.21 |
| | | | | | 8 | 10.69 | 10.08 | 0.06507 | 11.27 | 56.43 | $15.56 |
| | | | | | 10 | 12.88 | 11.41 | 0.06496 | 12.14 | 60.76 | $16.92 |
| | | | | | 12 | 14.66 | 12.75 | 0.06486 | 12.79 | 64.03 | $18.27 |
| | | | | 5 | 4 | 8.50 | 8.90 | 0.06516 | 10.32 | 51.66 | $14.38 |
| | | | | | 6 | 12.16 | 10.99 | 0.06500 | 11.86 | 59.38 | $16.49 |
| | | | | | 8 | 15.00 | 13.08 | 0.06484 | 12.91 | 64.64 | $18.61 |
| | | | | | 10 | 17.41 | 15.16 | 0.06468 | 13.73 | 68.72 | $20.72 |
| | | | | | 12 | 19.72 | 17.25 | 0.06452 | 14.46 | 72.39 | $22.84 |
| | | | | 6 | 4 | 11.59 | 10.74 | 0.06503 | 11.64 | 58.27 | $16.24 |
| | | | | | 6 | 15.69 | 13.74 | 0.06480 | 13.15 | 65.83 | $19.28 |
| | | | | | 8 | 18.97 | 16.75 | 0.06457 | 14.23 | 71.22 | $22.33 |
| | | | | | 10 | 22.06 | 19.75 | 0.06435 | 15.16 | 75.90 | $25.37 |
| | | | | | 12 | 25.03 | 22.76 | 0.06412 | 16.00 | 80.10 | $28.42 |
| | | 18 | 5.06 | 4 | 4 | 5.66 | 5.83 | 0.06539 | 10.22 | 34.89 | $11.26 |
| | | | | | 6 | 8.25 | 7.16 | 0.06529 | 11.84 | 40.41 | $12.61 |
| | | | | | 8 | 10.69 | 8.50 | 0.06519 | 13.15 | 44.87 | $13.97 |
| | | | | | 10 | 12.88 | 9.83 | 0.06509 | 14.20 | 48.46 | $15.32 |
| | | | | | 12 | 14.66 | 11.17 | 0.06498 | 15.00 | 51.18 | $16.67 |
| | | | | 5 | 4 | 8.50 | 7.33 | 0.06528 | 11.98 | 40.89 | $12.78 |
| | | | | | 6 | 12.16 | 9.41 | 0.06512 | 13.87 | 47.32 | $14.89 |
| | | | | | 8 | 15.00 | 11.50 | 0.06496 | 15.15 | 51.68 | $17.01 |
| | | | | | 10 | 17.41 | 13.58 | 0.06480 | 16.14 | 55.07 | $19.12 |
| | | | | | 12 | 19.72 | 15.67 | 0.06464 | 17.03 | 58.11 | $21.24 |
| | | | | 6 | 4 | 11.59 | 9.16 | 0.06515 | 13.60 | 46.40 | $14.64 |
| | | | | | 6 | 15.69 | 12.17 | 0.06492 | 15.44 | 52.68 | $17.68 |
| | | | | | 8 | 18.97 | 15.17 | 0.06470 | 16.75 | 57.15 | $20.73 |
| | | | | | 10 | 22.06 | 18.17 | 0.06447 | 17.88 | 61.03 | $23.78 |
| | | | | | 12 | 25.03 | 21.18 | 0.06424 | 18.90 | 64.50 | $26.82 |
| | | 24 | 3.83 | 4 | 4 | 5.66 | 5.04 | 0.06546 | 11.38 | 29.44 | $10.46 |
| | | | | | 6 | 8.25 | 6.37 | 0.06535 | 13.24 | 34.27 | $11.81 |
| | | | | | 8 | 10.69 | 7.71 | 0.06525 | 14.75 | 38.17 | $13.17 |
| | | | | | 10 | 12.88 | 9.05 | 0.06515 | 15.97 | 41.31 | $14.52 |
| | | | | | 12 | 14.66 | 10.38 | 0.06504 | 16.88 | 43.69 | $15.87 |
| | | | | 5 | 4 | 8.50 | 6.54 | 0.06534 | 13.41 | 34.69 | $11.98 |
| | | | | | 6 | 12.16 | 8.62 | 0.06518 | 15.58 | 40.31 | $14.09 |
| | | | | | 8 | 15.00 | 10.71 | 0.06502 | 17.05 | 44.13 | $16.21 |
| | | | | | 10 | 17.41 | 12.80 | 0.06486 | 18.20 | 47.08 | $18.32 |
| | | | | | 12 | 19.72 | 14.88 | 0.06470 | 19.22 | 49.74 | $20.44 |
| | | | | 6 | 4 | 11.59 | 8.37 | 0.06521 | 15.27 | 39.51 | $13.84 |
| | | | | | 6 | 15.69 | 11.38 | 0.06498 | 17.39 | 44.99 | $16.89 |
| | | | | | 8 | 18.97 | 14.38 | 0.06476 | 18.90 | 48.90 | $19.93 |
| | | | | | 10 | 22.06 | 17.39 | 0.06453 | 20.20 | 52.28 | $22.98 |
| | | | | | 12 | 25.03 | 20.39 | 0.06430 | 21.38 | 55.31 | $26.02 |

Black = Acceptable Design
Gray = Inadequate Structural Capacity

## Table A-1. Calculated Ultimate Strengths and Costs for Barrier Configurations

| Barrier Width (in.) | Stirrups | | Mc (k-ft/ft) | Longitudinal Bars | | Mw (k-ft/ft) | Steel (lb. / ft) | Concrete ($yd^3$/ft) | Yield Line Calculations | | Total Cost ($/ft) |
|---|---|---|---|---|---|---|---|---|---|---|---|
| | Bar No. | Spacing (in.) | | Bar No. | Quantity | | | | Critical Length (ft) | Factored Capacity Φwℓ (k) | |
| 8 | 5 | 6 | 18.67 | 4 | 4 | 5.66 | 17.45 | 0.06451 | 6.61 | 83.27 | $23.04 |
| | | | | | 6 | 8.25 | 18.78 | 0.06441 | 7.40 | 93.22 | $24.39 |
| | | | | | 8 | 10.69 | 20.12 | 0.06430 | 8.05 | 101.40 | $25.75 |
| | | | | | 10 | 12.91 | 21.46 | 0.06420 | 8.58 | 108.14 | $27.10 |
| | | | | | 12 | 14.72 | 22.79 | 0.06410 | 8.99 | 113.27 | $28.46 |
| | | | | 5 | 4 | 8.50 | 18.95 | 0.06440 | 7.47 | 94.10 | $24.56 |
| | | | | | 6 | 12.16 | 21.03 | 0.06424 | 8.41 | 105.93 | $26.67 |
| | | | | | 8 | 15.09 | 23.12 | 0.06408 | 9.07 | 114.30 | $28.79 |
| | | | | | 10 | 17.44 | 25.21 | 0.06392 | 9.56 | 120.45 | $30.90 |
| | | | | | 12 | 19.63 | 27.29 | 0.06376 | 9.99 | 125.85 | $33.02 |
| | | | | 6 | 4 | 11.59 | 20.78 | 0.06426 | 8.27 | 104.22 | $26.42 |
| | | | | | 6 | 15.75 | 23.79 | 0.06404 | 9.21 | 116.06 | $29.47 |
| | | | | | 8 | 18.91 | 26.79 | 0.06381 | 9.85 | 124.11 | $32.51 |
| | | | | | 10 | 21.84 | 29.80 | 0.06358 | 10.40 | 131.05 | $35.56 |
| | | | | | 12 | 24.69 | 32.80 | 0.06336 | 10.90 | 137.36 | $38.60 |
| | | 12 | 10.92 | 4 | 4 | 5.66 | 10.06 | 0.06507 | 7.79 | 57.37 | $15.55 |
| | | | | | 6 | 8.25 | 11.40 | 0.06497 | 8.86 | 65.25 | $16.90 |
| | | | | | 8 | 10.69 | 12.73 | 0.06487 | 9.73 | 71.67 | $18.26 |
| | | | | | 10 | 12.91 | 14.07 | 0.06476 | 10.44 | 76.94 | $19.61 |
| | | | | | 12 | 14.72 | 15.40 | 0.06466 | 10.98 | 80.93 | $20.97 |
| | | | | 5 | 4 | 8.50 | 11.56 | 0.06496 | 8.95 | 65.95 | $17.07 |
| | | | | | 6 | 12.16 | 13.65 | 0.06480 | 10.21 | 75.21 | $19.18 |
| | | | | | 8 | 15.09 | 15.73 | 0.06464 | 11.09 | 81.73 | $21.30 |
| | | | | | 10 | 17.44 | 17.82 | 0.06448 | 11.74 | 86.51 | $23.41 |
| | | | | | 12 | 19.63 | 19.90 | 0.06432 | 12.31 | 90.70 | $25.53 |
| | | | | 6 | 4 | 11.59 | 13.40 | 0.06483 | 10.03 | 73.88 | $18.93 |
| | | | | | 6 | 15.75 | 16.40 | 0.06460 | 11.28 | 83.10 | $21.98 |
| | | | | | 8 | 18.91 | 19.40 | 0.06437 | 12.13 | 89.35 | $25.02 |
| | | | | | 10 | 21.84 | 22.41 | 0.06415 | 12.86 | 94.73 | $28.07 |
| | | | | | 12 | 24.69 | 25.41 | 0.06392 | 13.52 | 99.61 | $31.11 |
| | | 18 | 7.61 | 4 | 4 | 5.66 | 7.60 | 0.06526 | 8.80 | 45.22 | $13.05 |
| | | | | | 6 | 8.25 | 8.93 | 0.06516 | 10.10 | 51.91 | $14.41 |
| | | | | | 8 | 10.69 | 10.27 | 0.06506 | 11.16 | 57.33 | $15.76 |
| | | | | | 10 | 12.91 | 11.61 | 0.06495 | 12.02 | 61.77 | $17.11 |
| | | | | | 12 | 14.72 | 12.94 | 0.06485 | 12.68 | 65.13 | $18.47 |
| | | | | 5 | 4 | 8.50 | 9.10 | 0.06515 | 10.22 | 52.49 | $14.57 |
| | | | | | 6 | 12.16 | 11.18 | 0.06499 | 11.74 | 60.31 | $16.69 |
| | | | | | 8 | 15.09 | 13.27 | 0.06483 | 12.81 | 65.80 | $18.80 |
| | | | | | 10 | 17.44 | 15.36 | 0.06467 | 13.59 | 69.82 | $20.92 |
| | | | | | 12 | 19.63 | 17.44 | 0.06451 | 14.28 | 73.34 | $23.03 |
| | | | | 6 | 4 | 11.59 | 10.93 | 0.06501 | 11.52 | 59.19 | $16.43 |
| | | | | | 6 | 15.75 | 13.94 | 0.06479 | 13.03 | 66.96 | $19.48 |
| | | | | | 8 | 18.91 | 16.94 | 0.06456 | 14.05 | 72.21 | $22.53 |
| | | | | | 10 | 21.84 | 19.95 | 0.06434 | 14.93 | 76.72 | $25.57 |
| | | | | | 12 | 24.69 | 22.95 | 0.06411 | 15.73 | 80.82 | $28.62 |
| | | 24 | 5.83 | 4 | 4 | 5.66 | 6.37 | 0.06536 | 9.69 | 38.16 | $11.80 |
| | | | | | 6 | 8.25 | 7.70 | 0.06525 | 11.19 | 44.06 | $13.16 |
| | | | | | 8 | 10.69 | 9.04 | 0.06515 | 12.40 | 48.84 | $14.51 |
| | | | | | 10 | 12.91 | 10.37 | 0.06505 | 13.40 | 52.75 | $15.87 |
| | | | | | 12 | 14.72 | 11.71 | 0.06494 | 14.15 | 55.70 | $17.22 |
| | | | | 5 | 4 | 8.50 | 7.87 | 0.06524 | 11.32 | 44.58 | $13.32 |
| | | | | | 6 | 12.16 | 9.95 | 0.06508 | 13.07 | 51.46 | $15.44 |
| | | | | | 8 | 15.09 | 12.04 | 0.06492 | 14.30 | 56.29 | $17.55 |
| | | | | | 10 | 17.44 | 14.12 | 0.06476 | 15.19 | 59.82 | $19.67 |
| | | | | | 12 | 19.63 | 16.21 | 0.06460 | 15.98 | 62.91 | $21.78 |
| | | | | 6 | 4 | 11.59 | 9.70 | 0.06511 | 12.82 | 50.48 | $15.19 |
| | | | | | 6 | 15.75 | 12.71 | 0.06488 | 14.55 | 57.31 | $18.23 |
| | | | | | 8 | 18.91 | 15.71 | 0.06466 | 15.73 | 61.92 | $21.28 |
| | | | | | 10 | 21.84 | 18.71 | 0.06443 | 16.73 | 65.88 | $24.32 |
| | | | | | 12 | 24.69 | 21.72 | 0.06420 | 17.64 | 69.48 | $27.37 |

Black = Acceptable Design
Gray = Inadequate Structural Capacity

## Table A-1. Calculated Ultimate Strengths and Costs for Barrier Configurations

| Barrier Width (in.) | Stirrups | | Mc (k-ft/ft) | Longitudinal Bars | | Mw (k-ft/ft) | Steel (lb. / ft) | Concrete ($yd^3$/ft) | Yield Line Calculations | | Total Cost ($/ft) |
|---|---|---|---|---|---|---|---|---|---|---|---|
| | Bar No. | Spacing (in.) | | Bar No. | Quantity | | | | Critical Length (ft) | Factored Capacity Φwℓ (k) | |
| 8 | 6 | 6 | 24.33 | 4 | 4 | 5.66 | 23.95 | 0.06403 | 6.15 | 101.02 | $29.63 |
| | | | | | 6 | 8.25 | 25.29 | 0.06393 | 6.83 | 112.11 | $30.99 |
| | | | | | 8 | 10.69 | 26.62 | 0.06383 | 7.38 | 121.28 | $32.34 |
| | | | | | 10 | 12.91 | 27.96 | 0.06373 | 7.85 | 128.87 | $33.70 |
| | | | | | 12 | 14.81 | 29.29 | 0.06362 | 8.22 | 134.94 | $35.05 |
| | | | | 5 | 4 | 8.50 | 25.45 | 0.06392 | 6.89 | 113.10 | $31.15 |
| | | | | | 6 | 12.16 | 27.54 | 0.06376 | 7.69 | 126.37 | $33.27 |
| | | | | | 8 | 15.19 | 29.62 | 0.06360 | 8.29 | 136.09 | $35.38 |
| | | | | | 10 | 17.47 | 31.71 | 0.06344 | 8.70 | 142.84 | $37.50 |
| | | | | | 12 | 19.56 | 33.79 | 0.06328 | 9.05 | 148.68 | $39.61 |
| | | | | 6 | 4 | 11.59 | 27.29 | 0.06379 | 7.58 | 124.46 | $33.01 |
| | | | | | 6 | 15.84 | 30.29 | 0.06356 | 8.41 | 138.07 | $36.06 |
| | | | | | 8 | 18.88 | 33.29 | 0.06334 | 8.94 | 146.80 | $39.11 |
| | | | | | 10 | 21.69 | 36.30 | 0.06311 | 9.40 | 154.33 | $42.15 |
| | | | | | 12 | 24.34 | 39.30 | 0.06288 | 9.80 | 161.04 | $45.20 |
| | | 12 | 14.25 | 4 | 4 | 5.66 | 13.31 | 0.06484 | 7.16 | 68.83 | $18.85 |
| | | | | | 6 | 8.25 | 14.65 | 0.06473 | 8.08 | 77.70 | $20.20 |
| | | | | | 8 | 10.69 | 15.98 | 0.06463 | 8.83 | 84.95 | $21.55 |
| | | | | | 10 | 12.91 | 17.32 | 0.06453 | 9.45 | 90.91 | $22.91 |
| | | | | | 12 | 14.81 | 18.66 | 0.06442 | 9.95 | 95.67 | $24.26 |
| | | | | 5 | 4 | 8.50 | 14.81 | 0.06472 | 8.16 | 78.48 | $20.37 |
| | | | | | 6 | 12.16 | 16.90 | 0.06456 | 9.25 | 88.95 | $22.48 |
| | | | | | 8 | 15.19 | 18.98 | 0.06440 | 10.04 | 96.57 | $24.60 |
| | | | | | 10 | 17.47 | 21.07 | 0.06424 | 10.59 | 101.83 | $26.71 |
| | | | | | 12 | 19.56 | 23.16 | 0.06409 | 11.06 | 106.39 | $28.83 |
| | | | | 6 | 4 | 11.59 | 16.65 | 0.06459 | 9.09 | 87.45 | $22.23 |
| | | | | | 6 | 15.84 | 19.65 | 0.06436 | 10.20 | 98.12 | $25.27 |
| | | | | | 8 | 18.88 | 22.66 | 0.06414 | 10.91 | 104.92 | $28.32 |
| | | | | | 10 | 21.69 | 25.66 | 0.06391 | 11.52 | 110.78 | $31.37 |
| | | | | | 12 | 24.34 | 28.66 | 0.06368 | 12.06 | 115.99 | $34.41 |
| | | 18 | 10.44 | 4 | 4 | 5.66 | 9.76 | 0.06510 | 7.90 | 55.69 | $15.25 |
| | | | | | 6 | 8.25 | 11.10 | 0.06500 | 9.00 | 63.42 | $16.60 |
| | | | | | 8 | 10.69 | 12.44 | 0.06490 | 9.89 | 69.71 | $17.96 |
| | | | | | 10 | 12.91 | 13.77 | 0.06479 | 10.62 | 74.87 | $19.31 |
| | | | | | 12 | 14.81 | 15.11 | 0.06469 | 11.20 | 78.98 | $20.67 |
| | | | | 5 | 4 | 8.50 | 11.26 | 0.06499 | 9.09 | 64.10 | $16.77 |
| | | | | | 6 | 12.16 | 13.35 | 0.06483 | 10.38 | 73.17 | $18.89 |
| | | | | | 8 | 15.19 | 15.44 | 0.06467 | 11.31 | 79.75 | $21.00 |
| | | | | | 10 | 17.47 | 17.52 | 0.06451 | 11.96 | 84.30 | $23.11 |
| | | | | | 12 | 19.56 | 19.61 | 0.06435 | 12.51 | 88.23 | $25.23 |
| | | | | 6 | 4 | 11.59 | 13.10 | 0.06486 | 10.19 | 71.87 | $18.63 |
| | | | | | 6 | 15.84 | 16.10 | 0.06463 | 11.50 | 81.09 | $21.68 |
| | | | | | 8 | 18.88 | 19.11 | 0.06440 | 12.33 | 86.96 | $24.72 |
| | | | | | 10 | 21.69 | 22.11 | 0.06418 | 13.05 | 92.01 | $27.77 |
| | | | | | 12 | 24.34 | 25.12 | 0.06395 | 13.69 | 96.50 | $30.82 |
| | | 24 | 8.08 | 4 | 4 | 5.66 | 7.99 | 0.06524 | 8.62 | 47.03 | $13.45 |
| | | | | | 6 | 8.25 | 9.33 | 0.06513 | 9.88 | 53.90 | $14.81 |
| | | | | | 8 | 10.69 | 10.66 | 0.06503 | 10.90 | 59.48 | $16.16 |
| | | | | | 10 | 12.91 | 12.00 | 0.06493 | 11.74 | 64.05 | $17.52 |
| | | | | | 12 | 14.81 | 13.34 | 0.06483 | 12.40 | 67.68 | $18.87 |
| | | | | 5 | 4 | 8.50 | 9.49 | 0.06512 | 9.99 | 54.50 | $14.97 |
| | | | | | 6 | 12.16 | 11.58 | 0.06496 | 11.46 | 62.55 | $17.09 |
| | | | | | 8 | 15.19 | 13.66 | 0.06480 | 12.53 | 68.37 | $19.20 |
| | | | | | 10 | 17.47 | 15.75 | 0.06465 | 13.27 | 72.39 | $21.32 |
| | | | | | 12 | 19.56 | 17.84 | 0.06449 | 13.90 | 75.86 | $23.43 |
| | | | | 6 | 4 | 11.59 | 11.33 | 0.06499 | 11.25 | 61.39 | $16.83 |
| | | | | | 6 | 15.84 | 14.33 | 0.06476 | 12.75 | 69.55 | $19.88 |
| | | | | | 8 | 18.88 | 17.34 | 0.06454 | 13.70 | 74.74 | $22.93 |
| | | | | | 10 | 21.69 | 20.34 | 0.06431 | 14.52 | 79.20 | $25.97 |
| | | | | | 12 | 24.34 | 23.34 | 0.06408 | 15.24 | 83.16 | $29.02 |

Black = Acceptable Design
Gray = Inadequate Structural Capacity

## APPENDIX B. Footing Design Calculations for Torsion

Figure B-1. Footing Cross Section - Interior Section

Figure B-2. Footing Cross Section - End Section

TORSION DESIGN CALCULATIONS FOR FOOTING
Interior Section:

Torsion Moment = $M_c$ = 8.08 *k-ft / ft*

$T = M_c * L_{CR}$ = 8.08 (*k-ft / ft*) * 9.88 (*ft*) * 12 (*in/ft*)

$T = 958$ *k-in*

Safety Factor, Φ = 0.75 for torsion

$T_n$ = T/0.75

$T_n = 1277.3$ *k-in*

1/2 of $T_n$ to be resisted on each side of impact

$T_n = 638.7$ *k-in*

Limiting pure torsion shear stress of concrete [9]:

$$v_{tc} = 6\sqrt{f'c}$$

$$v_{tc} = 6\sqrt{4000(psi)}$$

$$v_{tc} = .3795 \quad ksi$$

Torsion capacity of concrete:

$$T_c = kx^2 y v_{tc}$$

$$T_c = .133 * 18(in)^2 * 18(in) * 0.3795(k / in^2)$$

$$T_c = 295 \quad k\text{-}in$$

Torsion capacity required from stirrups

$T_s = T_n - T_c = 638.7 - 295$

$T_s = 343.7$ *k-in*

Stirrup Design

$$A_o = 0.85 * x_o y_o$$

$$x_o = y_o = 18(in) - 2 * 1.5(in) - 2 * 0.5(in) / 2$$

$$x_o = y_o = 14.5 \quad in$$

$$A_o = 178.7 \quad in^2$$

$$\frac{A_t}{S} = \frac{T_s}{2 A_o f_y}$$

$$\frac{A_t}{S} = \frac{343.7(k - in)}{2 * 178.7(in^2) * 60(k / in^2)}$$

$$\frac{A_t}{S} = 0.016025 \quad in^2 / in$$

Spacing of stirrups must not exceed the depth (d) of the member due to the nature of shear cracks acting at 45 degree angles. With our d = 15.75 inches and the spacing of the wall stirrups at 24 inches, the torsion stirrups will be spaced at 12 inches.

Spacing = 12 inches

$A_t = 0.016025\ (in^2 / in) * 12\ (in)$

$A_t = 0.1923\ \ in^2$

# 4 bar has $A_s = 0.20\ in^2$.

**<u># 4 stirrups with spacing of 12 in.</u>**

Torsion Longitudinal Reinforcement

$P_h = 4*x_o$

$P_h = 4*14.5\ (in)$

$P_h = 58\ \ in$

$A_l = A_t/S\ *P_h$

$A_l = 0.016025\ (in^2 / in) * 58\ (in)$

$A_l = 0.92946\ \ in^2$

Torsion bars must be placed in all stirrup corners and spaced less than 12 inches apart.

6 #4 bars gives an area of 1.20 $in^2$

**<u>6 #4 bars placed in stirrup corners and side midpoints.</u>**

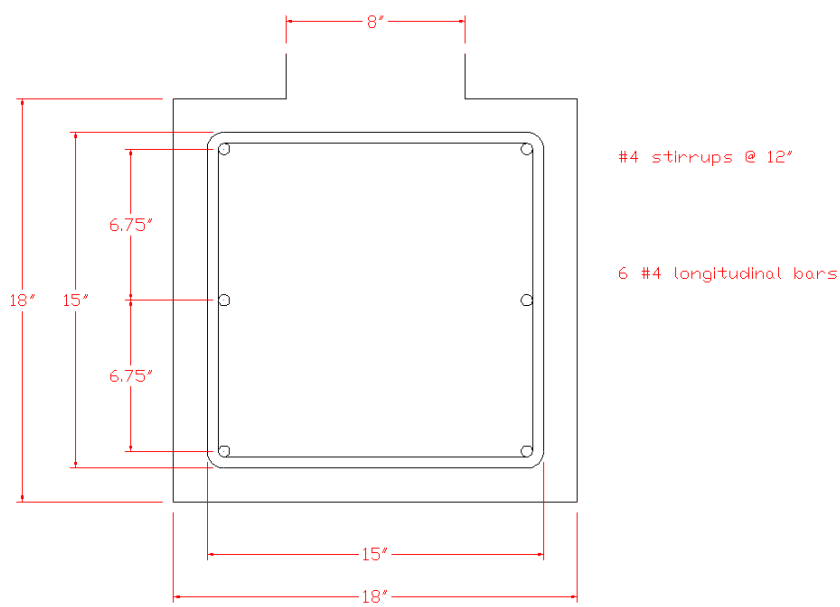


**Figure B-1. Footing Cross Section - Interior Section**

TORSION DESIGN CALCULATIONS FOR FOOTING
End Section:

Torsion Moment = $M_c$ = 18.67 *k-ft / ft*

$T = M_c * L_{CR}$

$T$ = 18.67(*k-ft / ft*) * 4.673 (*ft*) * 12 (*in/ft*)

$T$ = 1046.9 *k-in*

Safety Factor, Φ = 0.75 for torsion

$T_n = T / 0.75$

$T_n$ = 1395.9 *k-in*

Torsion capacity of concrete

$$T_c = kx^2 yv_{tc}$$

$$T_c = .133 * 18(in)^2 * 18(in) * 0.3795(k / in^2)$$

$T_c$ = 295 *k-in*

Torsion capacity required from stirrups

$T_s = T_n - T_c$

$T_s$ = 1363.5 – 295

$T_s$ = 1100.9 *k-in*

Stirrup Design

$$A_o = 0.85 * x_o y_o$$

$$x_o = y_o = 18(in) - 2 * 1.5(in) - 2 * 0.625(in) / 2$$

$$x_o = y_o = 14.375 \quad in$$

$$A_o = 175.64 \quad in^2$$

$$\frac{A_t}{S} = \frac{T_s}{2 A_o f_y}$$

$$\frac{A_t}{S} = \frac{1100.9(k - in)}{2 * 175.64(in^2) * 60(k / in^2)}$$

$$\frac{A_t}{S} = 0.052230 \quad in^2 / in$$

Spacing = 6 inches

$A_t$ = 0.052230 ($in^2$ / *in*)* 6 (*in*)

$A_t$ = 0.313 $in^2$

This value is very close to a #5 bar of $A_s = 0.31$ in$^2$. Taking into consideration that a reduction factor was used and that the torsion capacity of the wall was never investigated, using a #5 stirrup is acceptable.

**<u># 5 stirrups with spacing of 6 in.</u>**

Torsion Longitudinal Reinforcement

$P_h = 4*x_o$
$P_h = 4*14.375\ in$
$P_h = 57.5\ in$

$A_l = A_t/S\ *P_h$
$A_l = 0.052230\ (in^2 / in) * 57.5\ (in)$
$A_l = 3.00\ in^2$

Torsion bars must be placed in all stirrup corners and spaced less than 12 inches apart.

10 #5 bars gives an area of 3.10 in$^2$
**<u>10 #5 bars placed in stirrup corners, top / bottom midpoints, and spaced equally along the sides.</u>**

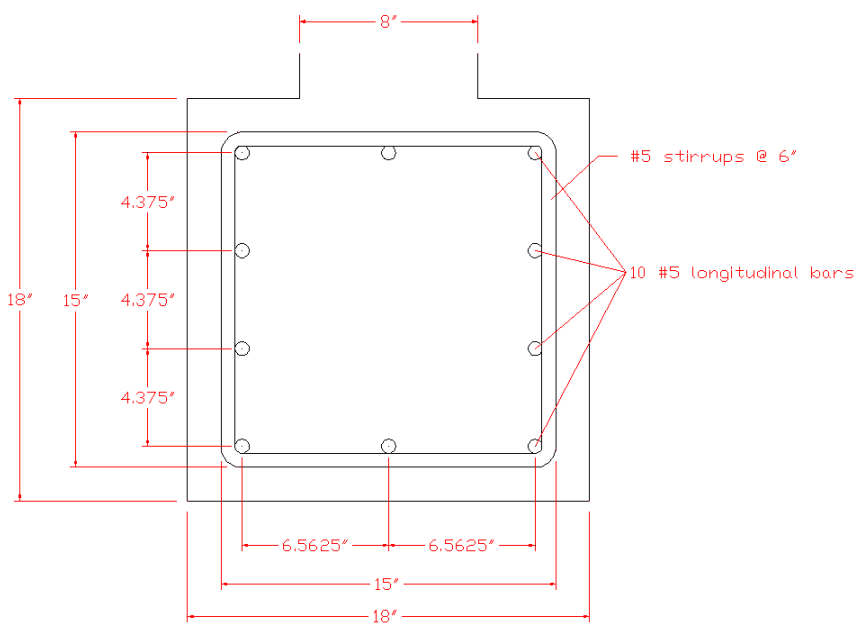


**Figure B-2. Footing Cross Section - End Section**

## APPENDIX C. English-Unit Design Details

Figure C-1. Test Installation Layout, Test CBPP-1

Figure C-2. Design Details and Reinforcement Placement, Test CBPP-1

Figure C-3. Internal Steel Reinforcement Dimensions, Test CBPP-1

Figure C-4. Location of Strain Gauges, Test CBPP-1

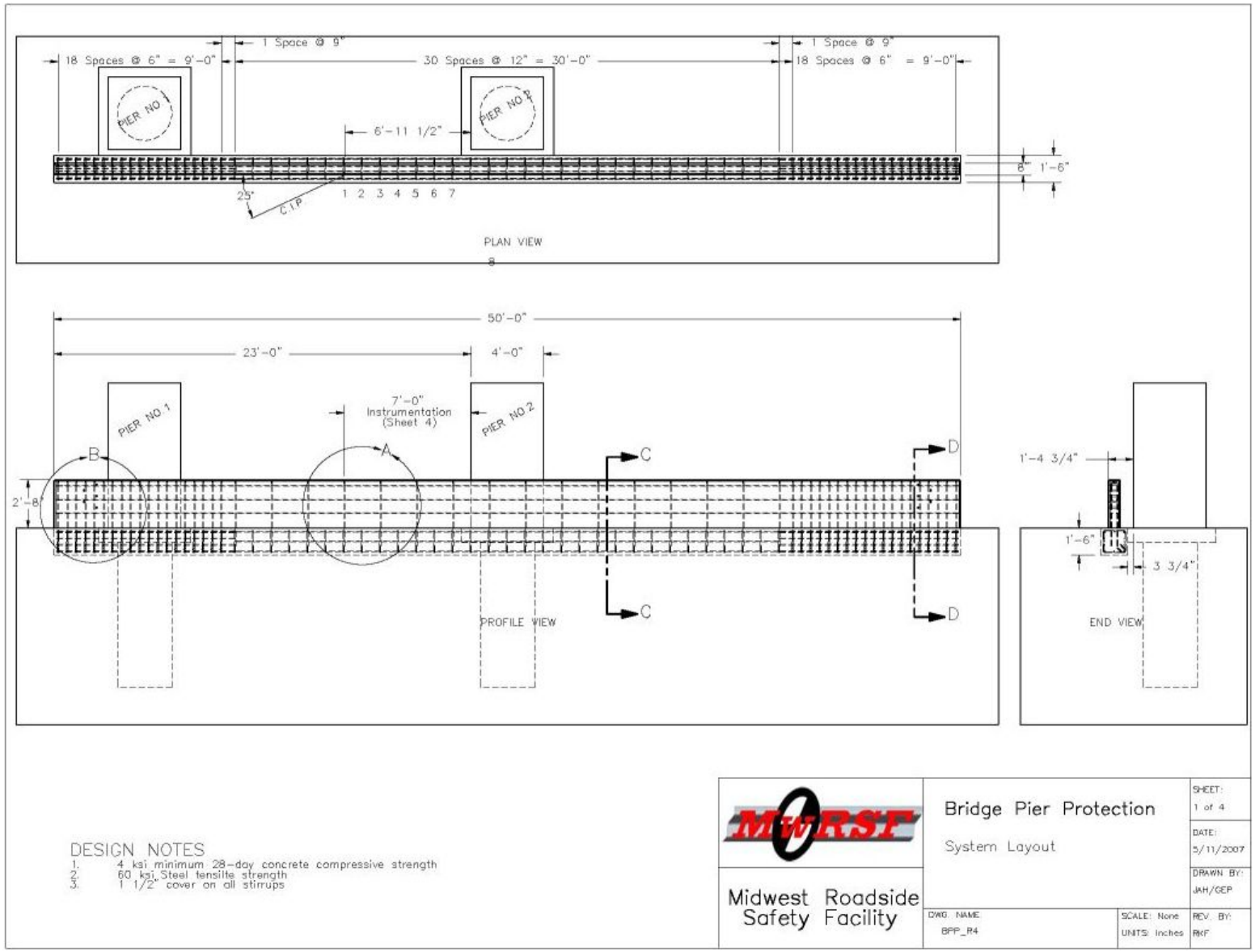


**Figure C-1. Test Installation Layout, Test CBPP-1**

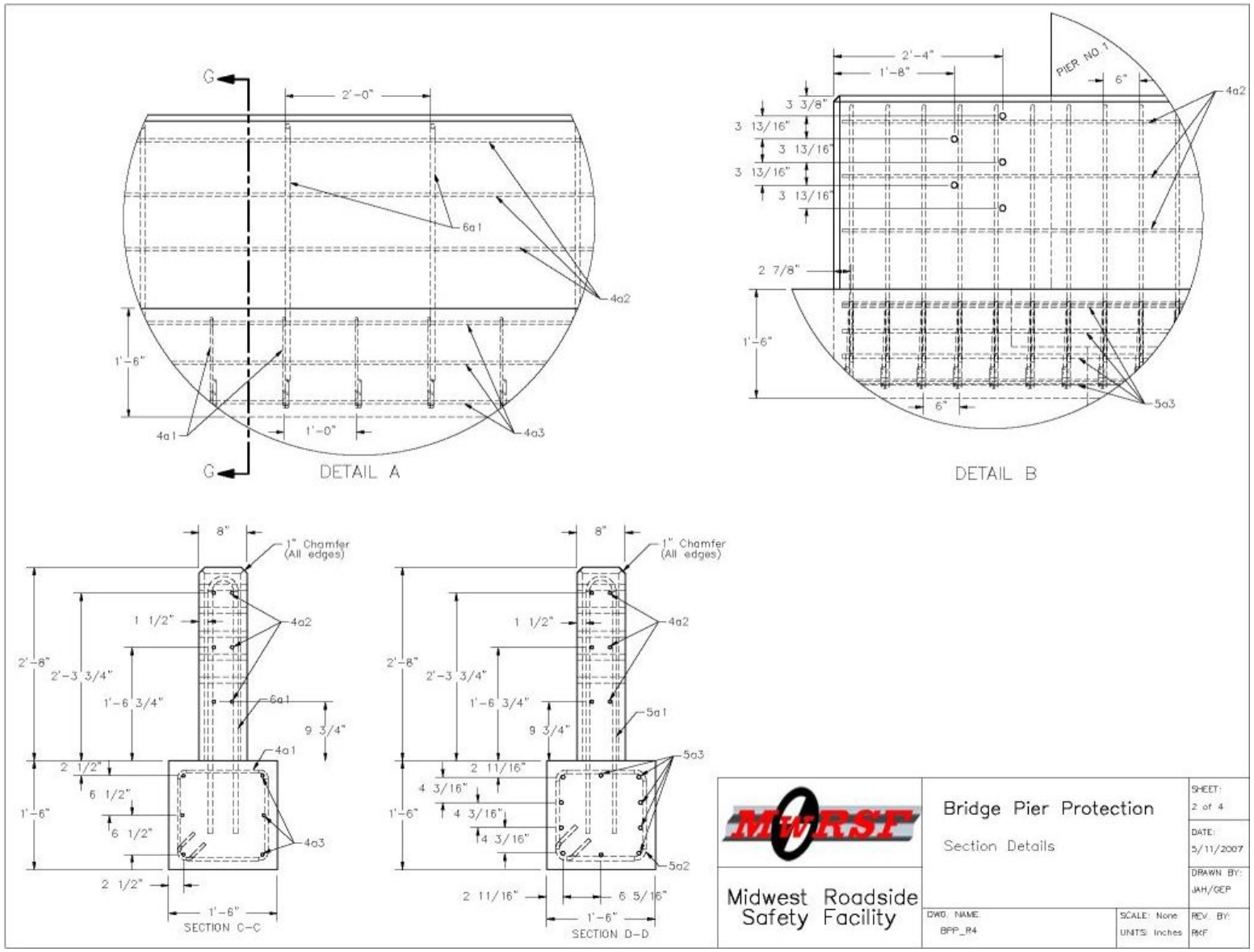


**Figure C-2. Design Details and Reinforcement Placement, Test CBPP-1**

Bill of Bars

| Item No. | Bar Size | Pin Dia. | Bar Length | Description | Material | QTY. |
|---|---|---|---|---|---|---|
| 4a1 | 4 | 2" | 65 3/4" | Footer Interior Stirrups | A615 Gr. 60 | 31 |
| 4a2 | 4 | – | 597" | Wall Longitudinal Bar | A615 Gr. 60 | 6 |
| 4a3 | 4 | – | 360" | Footer Interior Longitudinal Bar | A615 Gr. 60 | 6 |
| 5a1 | 5 | 3 3/4" | 86 7/8" | Wall End Stirrup | A615 Gr. 60 | 38 |
| 5a2 | 5 | 2 1/2" | 67 1/4" | Footer End Stirrups | A615 Gr. 60 | 38 |
| 5a3 | 5 | – | 118 1/2" | Footer End Longitudinal Bar | A615 Gr. 60 | 20 |
| 6a1 | 6 | 3 1/2" | 86 5/8" | Interior Wall Stirrups | A615 Gr. 60 | 16 |
| – | – | | Made October 2005 | – | – | 2 |

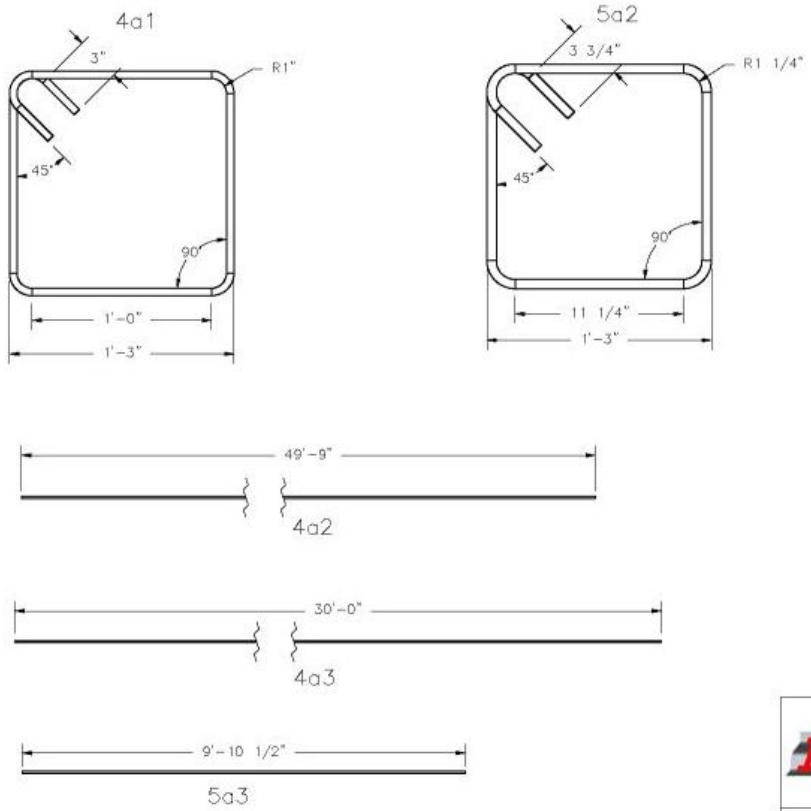


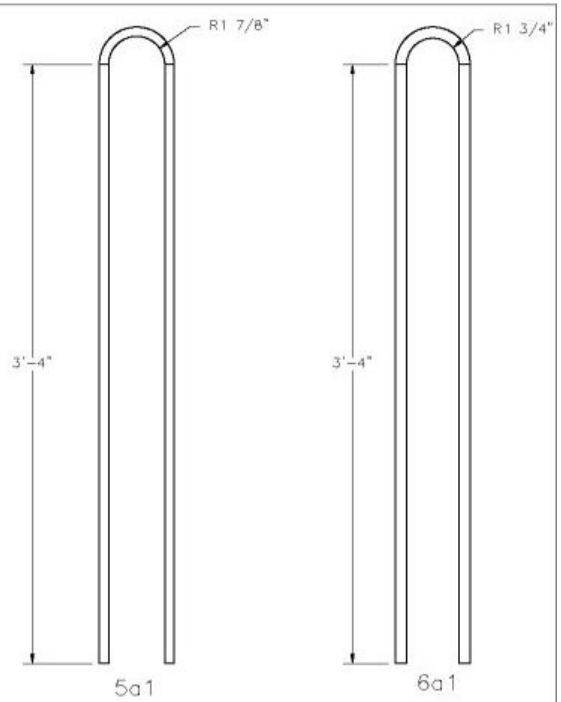


Midwest Roadside Safety Facility

Bridge Pier Protection

Bill of Bars

SHEET: 3 of 4

DATE: 5/11/2007

DRAWN BY: JAH/GEP

DWG. NAME: BPP_R4

SCALE: None

UNITS: Inches

REV. BY: RKF

**Figure C-3. Internal Steel Reinforcement Dimensions, Test CBPP-1**

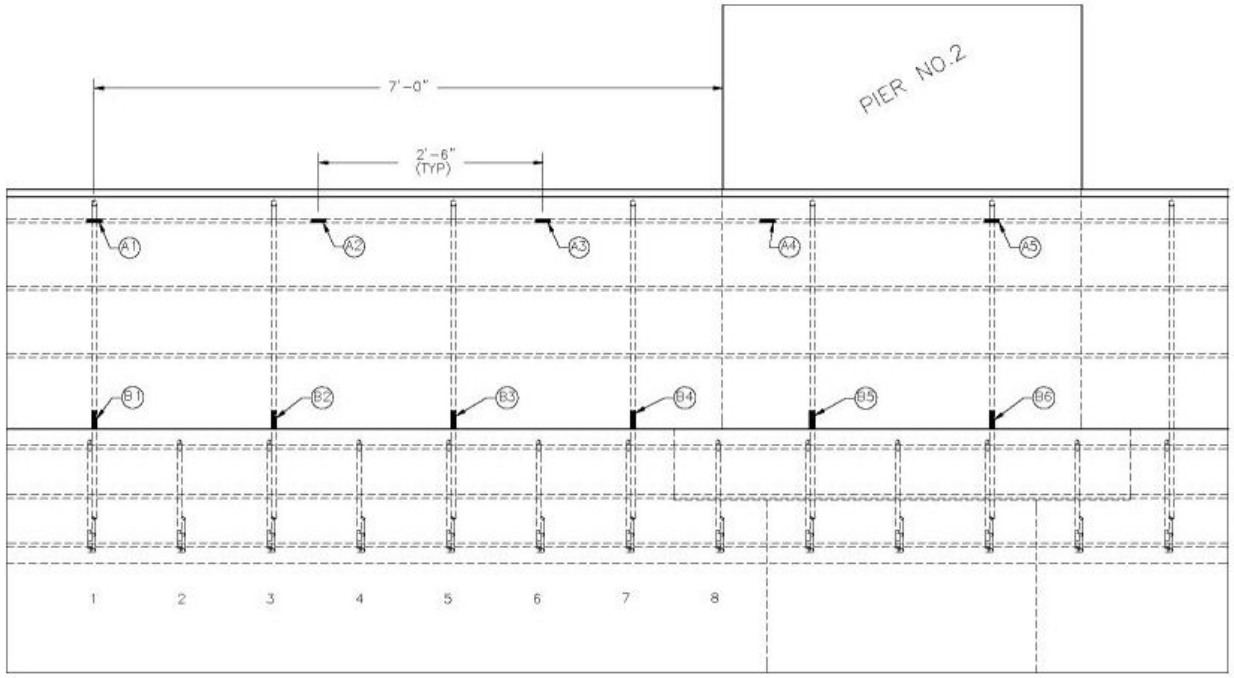


NOTE:

1. Strain gauges A1–A5 are attached to the top horizontal 4a2 bars of the wall on both sides (10 gauges total)

2. Strain gauges B1–B6 are attached to the vertical 6a1 bars of the wall on the front side of wall (6 gauges total)

3. Other linear displacement transducers still may be utilized on the back side of the parapet.

| | | | |
|---|---|---|---|
| MWRSF Midwest Roadside Safety Facility | Bridge Pier Protection<br>Instrumentation Layout<br>–16 Strain gauges | | SHEET: 4 of 4 |
| | | | DATE: 5/11/2007 |
| | | | DRAWN BY: JAH/GEP |
| | DWG. NAME: BPP_R4 | SCALE: None<br>UNITS: Inches | REV. BY: RKF |

**Figure C-4. Location of Strain Gauges, Test CBPP-1**

## APPENDIX D. Test CBPP-1 Summary Sheet in English-Units

Figure D-1. Summary of Test Results and Sequential Photographs (English), Test CBPP-1

0.000 sec

0.072 sec

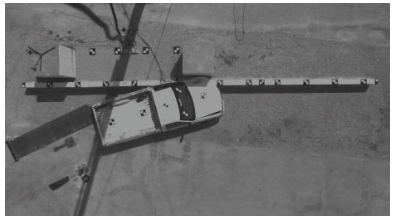

0.116 sec

0.196 sec

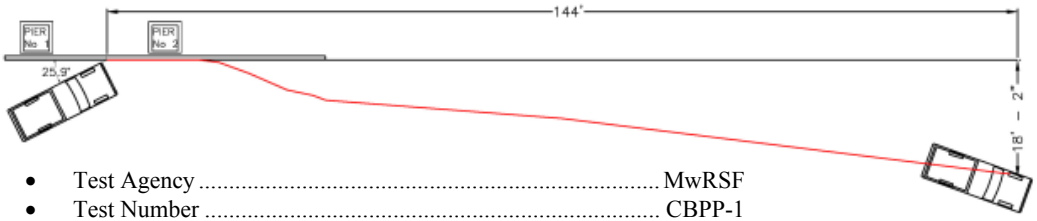


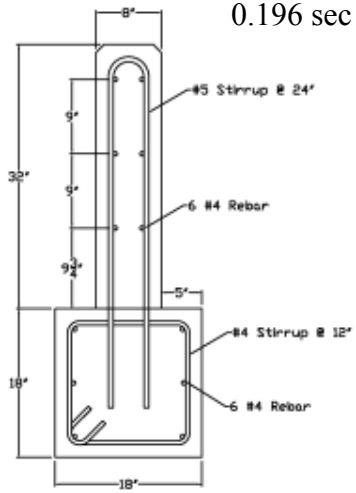


- Test Agency ..... MwRSF
- Test Number ..... CBPP-1
- Date ..... 7/3/07
- NCHRP Report 350 Test Designation..... 3-11
- Test Article ..... Concrete Pier Protection Barrier
- Concrete Material..... Nebraska L4000 mix
- Reinforcing Steel Material ..... Grade 60 Rebar
- Concrete Barrier
  - Length ..... 50 ft
  - Width..... 8 in.
  - Height..... 32 in.
- Concrete Footing
  - Length ..... 50 ft
  - Width..... 18 in.
  - Depth ..... 18in.
- Vehicle Make and Model.....1999 Chevrolet C2500 Pickup
  - Curb.....4,625 lbs
  - Test Inertial .....4,442 lbs
  - Gross Static .....4,442 lbs
- Impact Conditions
  - Speed ..... 64.8 mph
  - Angle .....25.9 deg
  - Impact Location.....16 ft from Upstream End
- Exit Conditions
  - Speed ..... 49.6 mph
  - Angle .....6.6 deg
- Vehicle Stability .....Satisfactory
- Occupant Ridedown Deceleration (10 msec avg.)
  - Longitudinal .....6.97 g's
  - Lateral .....9.66 g's
- Occupant Impact Velocity
  - Longitudinal .....21.40 ft/s
  - Lateral .....25.40 ft/s
- Vehicle Damage .....Moderate
  - VDS[16] .....11-FL-5 and 11-RD-4
  - CDC[17] .....11-FLEN3 and 11-LDES2
- Vehicle Stopping Distance.....144 ft DS of impact, 16 ft Laterally
- Test Article Damage ..... Minimal
- Test Article Deflections
  - Permanent Set ..... NA
  - Dynamic .....1 in.
  - Working Width.....19.875 in.

**Figure D-1. Summary of Test Results and Sequential Photographs (English), Test CBPP-1**

## APPENDIX E. Occupant Compartment Deformation Data

Figure. E-1. Occupant Compartment Deformation Data – Set 1, Test CBPP-1

Figure E-2. Occupant Compartment Deformation Data – Set 2, Test CBPP-1

Figure E-3. Addition Occupant Compartment Deformation Data, Test CBPP-1

Figure E-4. Occupant Compartment Deformation Index (OCDI), Test CBPP-1

VEHICLE PRE/POST CRUSH INFO
Set-1

TEST: CBPP-1
VEHICLE: 1999 Chevrolet C2500

| POINT | X | Y | Z | X' | Y' | Z' | DEL X | DEL Y | DEL Z |
|---|---|---|---|---|---|---|---|---|---|
| 1 | 58.75 | -26.5 | -1.5 | 58 | -23 | -2.5 | -0.75 | 3.5 | -1 |
| 2 | 60 | -22 | -2.5 | 58.75 | -18.75 | -4.5 | -1.25 | 3.25 | -2 |
| 3 | 60.25 | -17.75 | -3 | 60 | -14.25 | -3.75 | -0.25 | 3.5 | -0.75 |
| 4 | 58.5 | -11.25 | -4.25 | 58.25 | -8.25 | -4.25 | -0.25 | 3 | 0 |
| 5 | 55 | -26 | -6.25 | 53.25 | -21.5 | -6.5 | -1.75 | 4.5 | -0.25 |
| 6 | 55 | -21.25 | -6.75 | 51.75 | -18.75 | -4.5 | -3.25 | 2.5 | 2.25 |
| 7 | 55 | -17.25 | -6.75 | 54 | -15 | -5 | -1 | 2.25 | 1.75 |
| 8 | 54.75 | -11.75 | -6.75 | 53.25 | -9.5 | -5.25 | -1.5 | 2.25 | 1.5 |
| 9 | 52.75 | -6 | -4 | 51.5 | -5.5 | -2.75 | -1.25 | 0.5 | 1.25 |
| 10 | 49 | -26.25 | -8.75 | 47 | -21 | -9.5 | -2 | 5.25 | -0.75 |
| 11 | 48.75 | -21.25 | -9 | 47.5 | -19.75 | -6.25 | -1.25 | 1.5 | 2.75 |
| 12 | 48.75 | -17.25 | -9.25 | 47.25 | -15.75 | -6.75 | -1.5 | 1.5 | 2.5 |
| 13 | 48.5 | -11.5 | -9 | 46.5 | -10.25 | -7 | -2 | 1.25 | 2 |
| 14 | 47.25 | -6.25 | -5 | 45.75 | -6.5 | -2.5 | -1.5 | -0.25 | 2.5 |
| 15 | 43.25 | -26.75 | -9 | 43.25 | -23 | -10.25 | 0 | 3.75 | -1.25 |
| 16 | 43 | -21.25 | -9.25 | 42 | -20 | -7.5 | -1 | 1.25 | 1.75 |
| 17 | 43 | -17 | -9.75 | 41.5 | -16.25 | -7.5 | -1.5 | 0.75 | 2.25 |
| 18 | 42.75 | -11.75 | -9.75 | 41 | -10.75 | -7.5 | -1.75 | 1 | 2.25 |
| 19 | 42 | -6 | -5.5 | 40.75 | -6.5 | -2.5 | -1.25 | -0.5 | 3 |
| 20 | 38.25 | -27 | -9.25 | 37.5 | -24.75 | -9.25 | -0.75 | 2.25 | 0 |
| 21 | 38.5 | -21.5 | -9.5 | 37.25 | -20 | -6.5 | -1.25 | 1.5 | 3 |
| 22 | 38.25 | -16.5 | -9.75 | 36.5 | -15.75 | -7.75 | -1.75 | 0.75 | 2 |
| 23 | 38.25 | -11.5 | -9.75 | 36 | -10.5 | -7 | -2.25 | 1 | 2.75 |
| 24 | 37.75 | -6 | -5.75 | 36.25 | -6.25 | -2.25 | -1.5 | -0.25 | 3.5 |
| 25 | 32 | -26.75 | -8.75 | 31.25 | -25 | -8 | -0.75 | 1.75 | 0.75 |
| 26 | 32 | -20.5 | -9.5 | 31 | -20 | -7.75 | -1 | 0.5 | 1.75 |
| 27 | 32.5 | -16.25 | -7.25 | 30.75 | -15.75 | -7.5 | -1.75 | 0.5 | -0.25 |
| 28 | 30.75 | -5.75 | -6 | 30.75 | -5.75 | -6 | 0 | 0 | 0 |

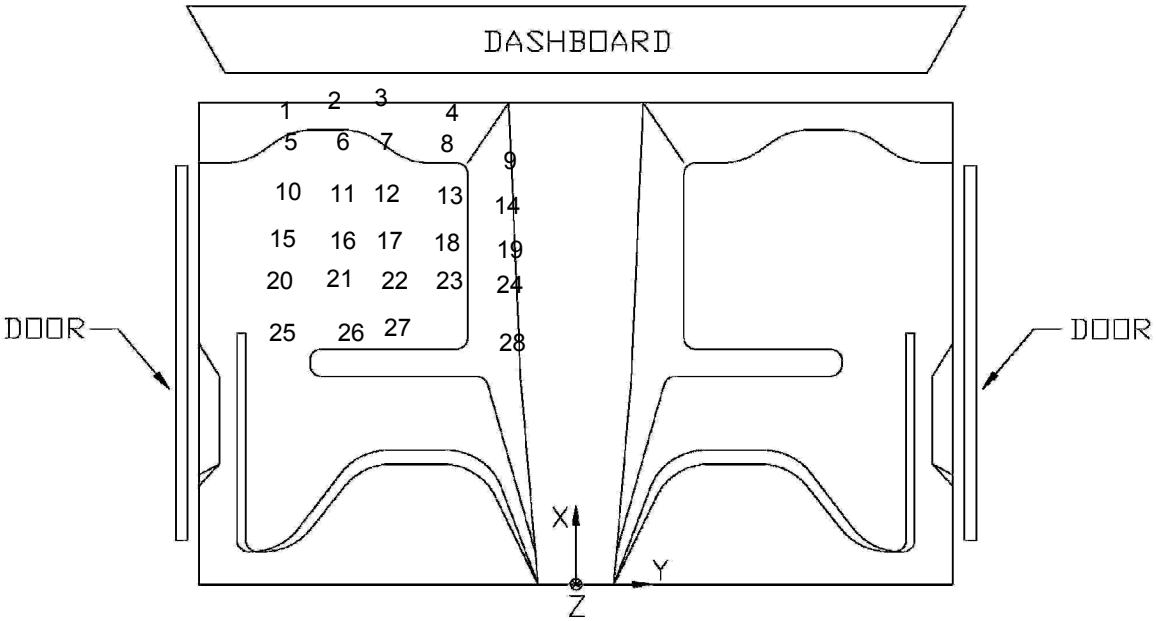


**Figure E-1. Occupant Compartment Deformation Data – Set 1, Test CBPP-1**

VEHICLE PRE/POST CRUSH INFO
Set-2

TEST: CBPP-1
VEHICLE: 1999 Chevrolet C2500

| POINT | X | Y | Z | X' | Y' | Z' | DEL X | DEL Y | DEL Z |
|---|---|---|---|---|---|---|---|---|---|
| 1 | -6.5 | 8.5 | -0.75 | 51.75 | -15.5 | -2 | 58.25 | -24 | -1.25 |
| 2 | -6.5 | 8.5 | -1.75 | 52.5 | -11.25 | -3 | 59 | -19.75 | -1.25 |
| 3 | -6.5 | 8.5 | -2.25 | 53.75 | -6.75 | -3 | 60.25 | -15.25 | -0.75 |
| 4 | -6.5 | 8.5 | -3.5 | 52 | -0.75 | -3.75 | 58.5 | -9.25 | -0.25 |
| 5 | -6.5 | 8.5 | -5.5 | 47 | -14 | -6 | 53.5 | -22.5 | -0.5 |
| 6 | -6.5 | 8.5 | -6 | 45.5 | -11.25 | -4 | 52 | -19.75 | 2 |
| 7 | -6.5 | 8.5 | -6.25 | 47.75 | -7.5 | -5 | 54.25 | -16 | 1.25 |
| 8 | -6.5 | 8.5 | -6 | 47 | -2 | -4.75 | 53.5 | -10.5 | 1.25 |
| 9 | -6.5 | 8.5 | -3.25 | 45.25 | 2 | -2.25 | 51.75 | -6.5 | 1 |
| 10 | -6.5 | 8.5 | -8 | 40.75 | -13.5 | -9 | 47.25 | -22 | -1 |
| 11 | -6.5 | 8.5 | -8.25 | 41.25 | -12.25 | -5.75 | 47.75 | -20.75 | 2.5 |
| 12 | -6.5 | 8.5 | -8.5 | 41 | -8.25 | -6.25 | 47.5 | -16.75 | 2.25 |
| 13 | -6.5 | 8.5 | -8.5 | 40.25 | -2.75 | -6.75 | 46.75 | -11.25 | 1.75 |
| 14 | -6.5 | 8.5 | -4.5 | 39.5 | 1 | -2.5 | 46 | -7.5 | 2 |
| 15 | -6.5 | 8.5 | -8.25 | 37 | -15.5 | -9.75 | 43.5 | -24 | -1.5 |
| 16 | -6.5 | 8.5 | -8.5 | 35.75 | -12.5 | -5.5 | 42.25 | -21 | 3 |
| 17 | -6.5 | 8.5 | -9 | 35.25 | -8.75 | -7 | 41.75 | -17.25 | 2 |
| 18 | -6.5 | 8.5 | -9 | 34.75 | -3.25 | -7.25 | 41.25 | -11.75 | 1.75 |
| 19 | -6.5 | 8.5 | -5 | 34.5 | 1 | -2 | 41 | -7.5 | 3 |
| 20 | -6.5 | 8.5 | -8.5 | 31.25 | -17.25 | -8.5 | 37.75 | -25.75 | 0 |
| 21 | -6.5 | 8.5 | -8.75 | 31 | -12.5 | -6 | 37.5 | -21 | 2.75 |
| 22 | -6.5 | 8.5 | -9.25 | 30.25 | -8.25 | -7.25 | 36.75 | -16.75 | 2 |
| 23 | -6.5 | 8.5 | -9.25 | 29.75 | -3 | -6.75 | 36.25 | -11.5 | 2.5 |
| 24 | -6.5 | 8.5 | -5.25 | 30 | 1.25 | -2 | 36.5 | -7.25 | 3.25 |
| 25 | -6.5 | 8.5 | -8.25 | 25 | -17.5 | -7.5 | 31.5 | -26 | 0.75 |
| 26 | -6.5 | 8.5 | -8.75 | 24.75 | -12.5 | -7.25 | 31.25 | -21 | 1.5 |
| 27 | -6.5 | 8.5 | -9.25 | 24.5 | -8.25 | -7 | 31 | -16.75 | 2.25 |
| 28 | -6.5 | 8.5 | -5.75 | 24.5 | 1.75 | -5.75 | 31 | -6.75 | 0 |

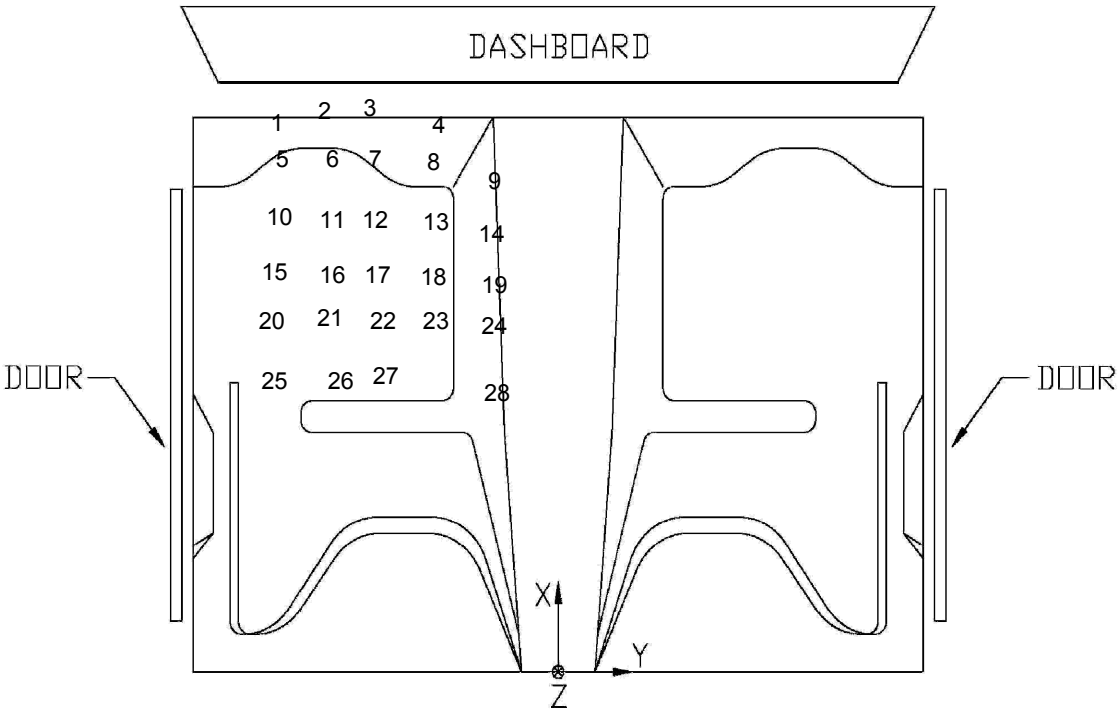


**Figure E-2. Occupant Compartment Deformation Data – Set 2, Test CBPP-1**

Extra crush measurements-lateral deflection

Measurements taken from left door seam to right door seam.

CBPP-1

| | | |
|---|---|---|
| 1 | 64.75 | Front of door |
| 2 | 64 | Midspan (front of door to front of seat) |
| 3 | 64.125 | Front of seat |
| 4 | 64.25 | Front of seat belt |
| 5 | 64 | Back of door |

Reference Vehicle (no damage)

| | | |
|---|---|---|
| 1 | 58 | Front of door |
| 2 | 59.375 | Midspan (front of door to front of seat) |
| 3 | 61 | Front of seat |
| 4 | 63.5 | Front of seat belt |
| 5 | 63.125 | Back of door |

**Total crush at each point.**

| | | |
|---|---|---|
| 1 | 6.75 | Front of door |
| 2 | 4.625 | Midspan (front of door to front of seat) |
| 3 | 3.125 | Front of seat |
| 4 | 0.75 | Front of seat belt |
| 5 | 0.875 | Back of door |

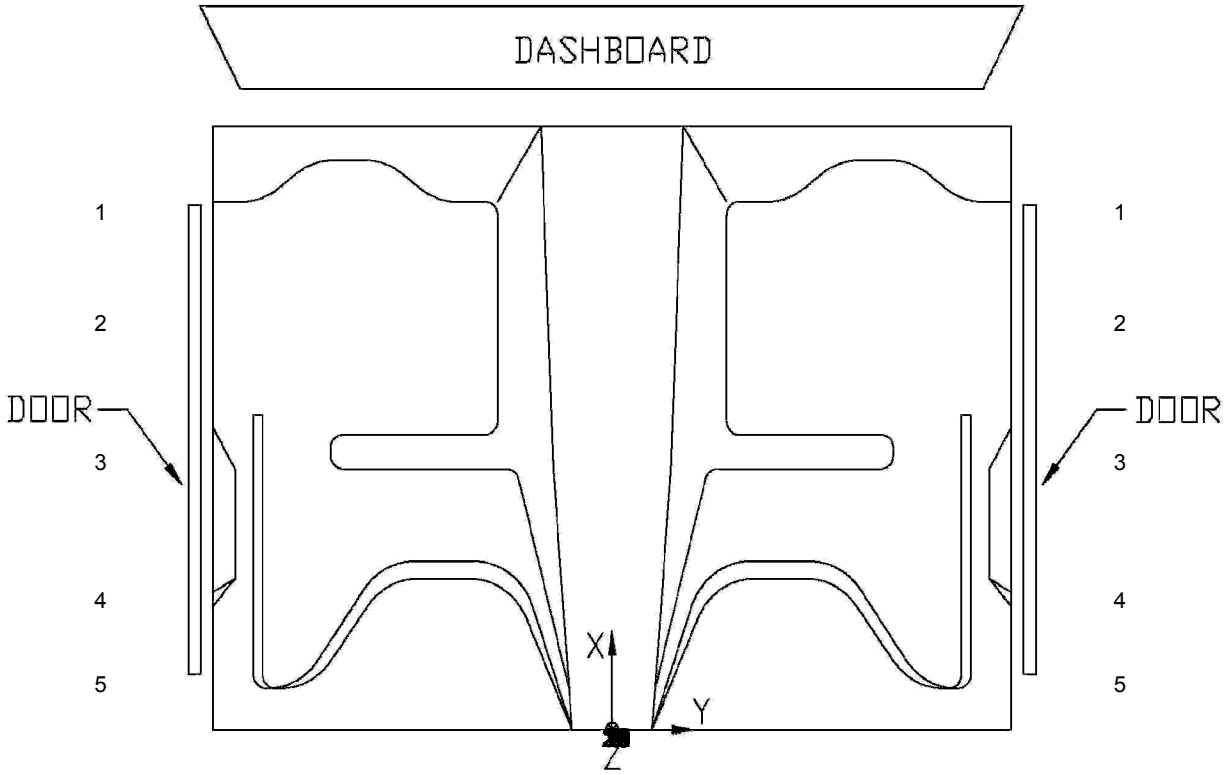


**Figure E-3. Addition Occupant Compartment Deformation Data, Test CBPP-1**

**Occupant Compartment Deformation Index (OCDI)**

**Test No.** CBPP-1
**Vehicle Type:** 1999 Chevrolet C2500

**OCDI = XXABCDEFGHI**

XX = location of occupant compartment deformation

A = distance between the dashboard and a reference point at the rear of the occupant compartment, such as the top of the rear seat or the rear of the cab on a pickup

B = distance between the roof and the floor panel

C = distance between a reference point at the rear of the occupant compartment and the motor panel

D = distance between the lower dashboard and the floor panel

E = interior width

F = distance between the lower edge of right window and the upper edge of left window

G = distance between the lower edge of left window and the upper edge of right window

H= distance between bottom front corner and top rear corner of the passenger side window

I= distance between bottom front corner and top rear corner of the driver side window

**Severity Indices**

0 - if the reduction is less than 3%
1 - if the reduction is greater than 3% and less than or equal to 10 %
2 - if the reduction is greater than 10% and less than or equal to 20 %
3 - if the reduction is greater than 20% and less than or equal to 30 %
4 - if the reduction is greater than 30% and less than or equal to 40 %

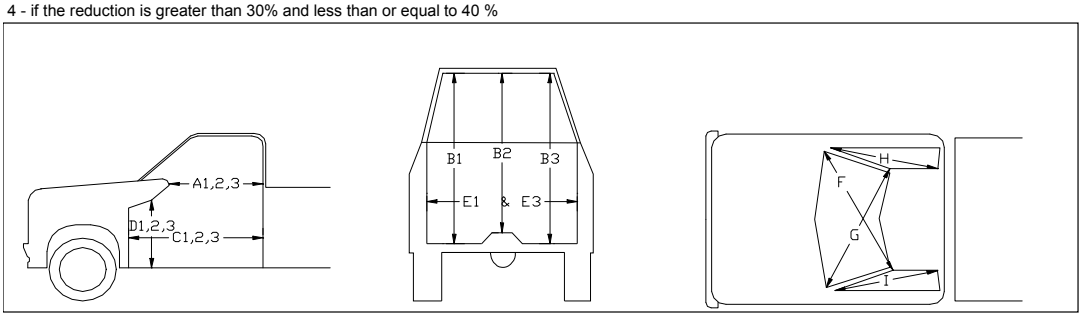


where,
1 = Passenger Side
2 = Middle
3 = Driver Side

**Location:**

| Measurement | Pre-Test (in.) | Post-Test (in.) | Change (in.) | % Difference | Severity Index |
|---|---|---|---|---|---|
| A1 | 39.00 | 38.00 | -1.00 | -2.56 | 0 |
| A2 | 40.00 | 40.75 | 0.75 | 1.88 | 0 |
| A3 | 39.25 | 40.25 | 1.00 | 2.55 | 0 |
| B1 | 46.75 | 44.50 | -2.25 | -4.81 | 1 |
| B2 | 42.50 | 43.00 | 0.50 | 1.18 | 0 |
| B3 | 46.50 | 46.50 | 0.00 | 0.00 | 0 |
| C1 | 57.50 | 55.50 | -2.00 | -3.48 | 1 |
| C2 | 54.50 | 53.25 | -1.25 | -2.29 | 0 |
| C3 | 57.50 | 57.75 | 0.25 | 0.43 | 0 |
| D1 | 15.75 | 14.00 | -1.75 | -11.11 | 2 |
| D2 | 9.00 | 9.00 | 0.00 | 0.00 | 0 |
| D3 | 15.50 | 16.00 | 0.50 | 3.23 | 1 |
| E1 | 62.75 | 58.50 | -4.25 | -6.77 | 1 |
| E3 | 64.00 | 63.00 | -1.00 | -1.56 | 0 |
| F | 57.00 | 57.25 | 0.25 | 0.44 | 0 |
| G | 56.50 | 56.50 | 0.00 | 0.00 | 0 |
| H | 40.75 | 40.75 | 0.00 | 0.00 | 0 |
| I | 41.00 | 40.75 | -0.25 | -0.61 | 0 |

**Note: Maximum sevrity index for each variable (A-I) is used for determination of final OCDI value**

| | XX | A | B | C | D | E | F | G | H | I |
|---|---|---|---|---|---|---|---|---|---|---|
| **Final OCDI:** | LF | 0 | 1 | 1 | 2 | 1 | 0 | 0 | 0 | 0 |

**Figure E-4. Occupant Compartment Deformation Index (OCDI), Test CBPP-1**

## APPENDIX F. Accelerometer and Rate Transducer Data Plots

Figure F-1. Graph of 10-ms Average Longitudinal Deceleration, Test CBPP-1

Figure F-2. Graph of Longitudinal Occupant Impact Velocity, Test CBPP-1

Figure F-3. Graph of Longitudinal Occupant Displacement, Test CBPP-1

Figure F-4. Graph of 10-ms Average Lateral Deceleration, Test CBPP-1

Figure F-5. Graph of Lateral Occupant Impact Velocity, Test CBPP-1

Figure F-6. Graph of Lateral Occupant Displacement, Test CBPP-1

Figure F-7. Graph of Vehicle Roll, Pitch, and Yaw Angular Displacements, Test CBPP-1

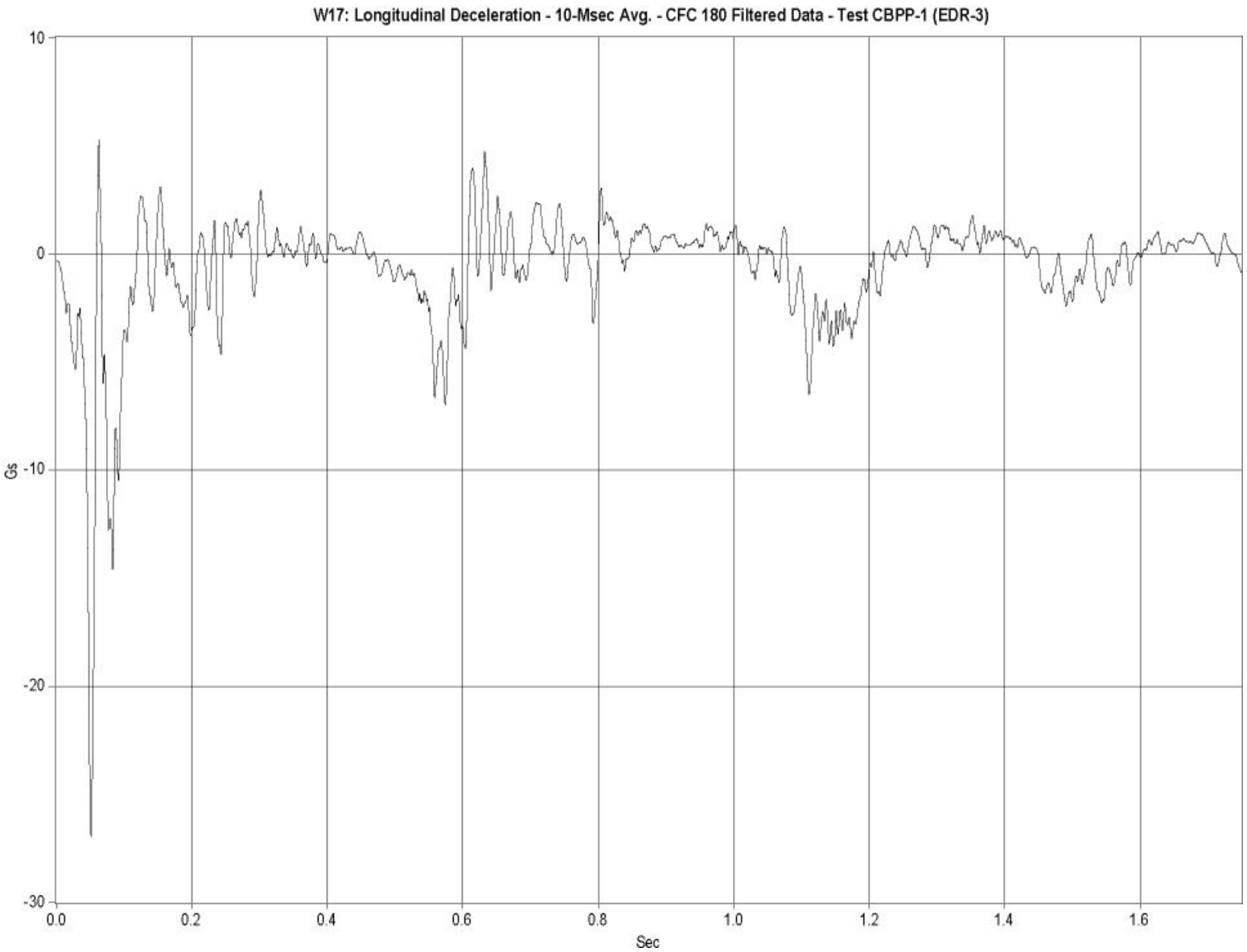


**Figure F-1. Graph of 10-ms Average Longitudinal Deceleration, Test CBPP-1**

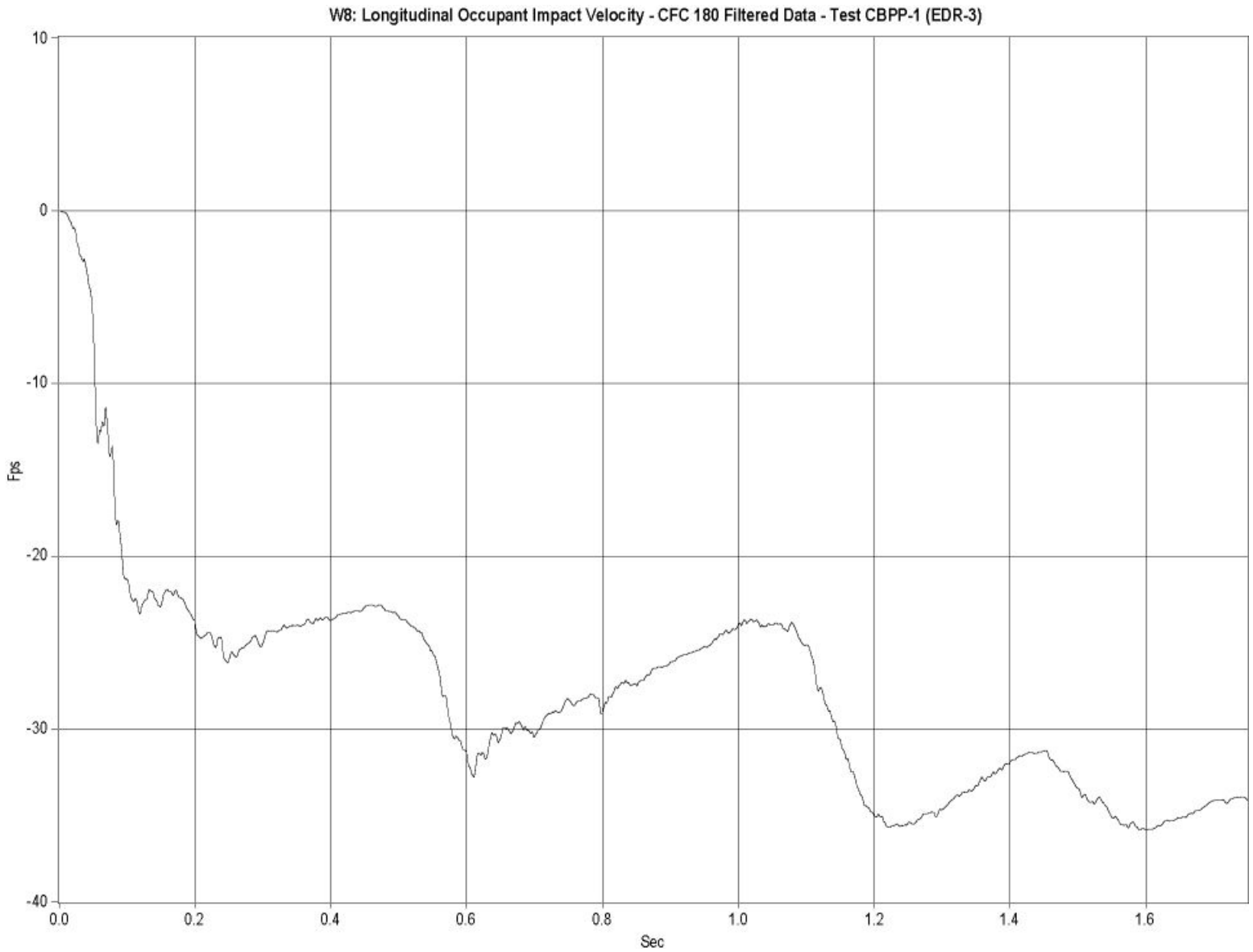


**Figure F-2. Graph of Longitudinal Occupant Impact Velocity, Test CBPP-1**

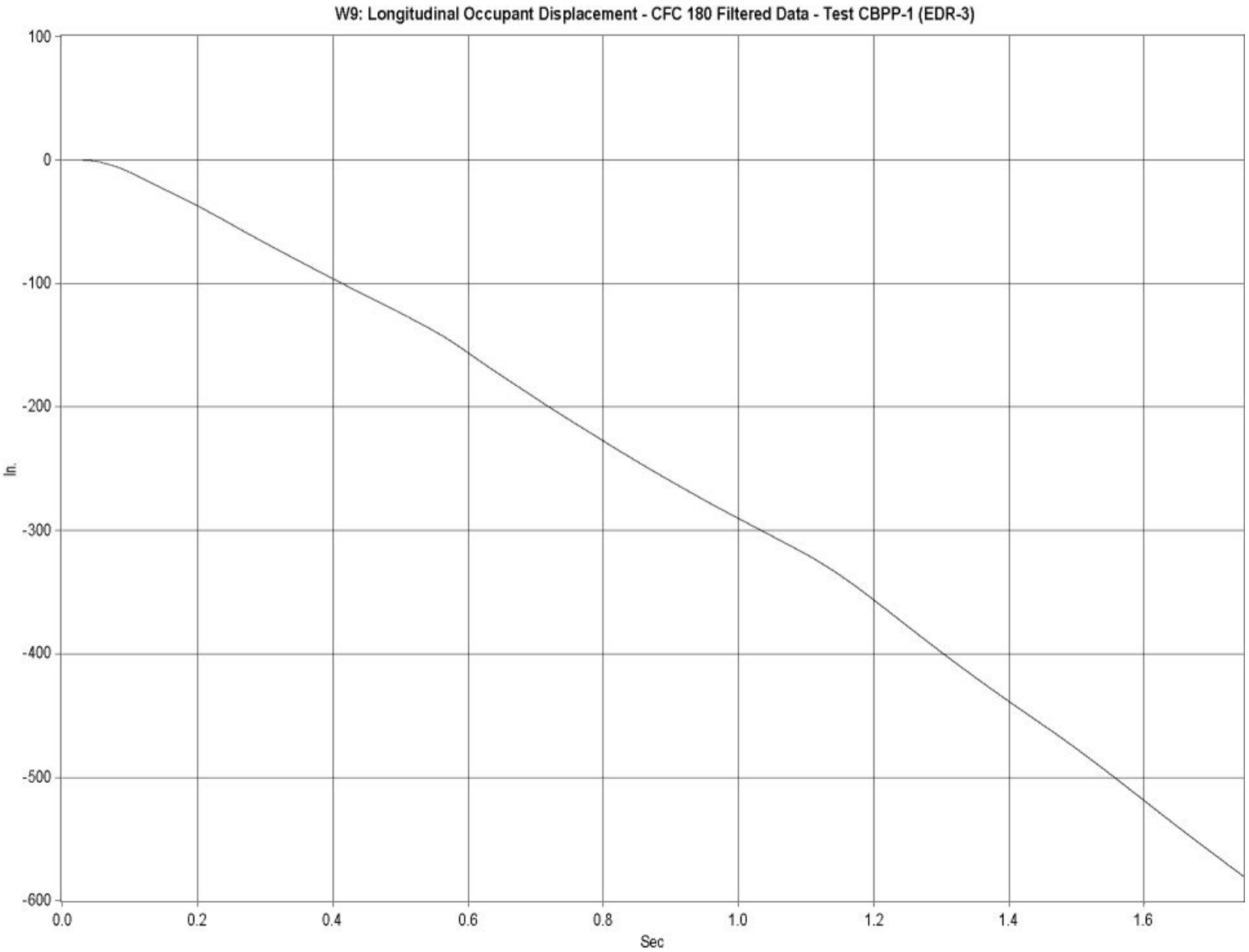


**Figure F-3. Graph of Longitudinal Occupant Displacement, Test CBPP-1**

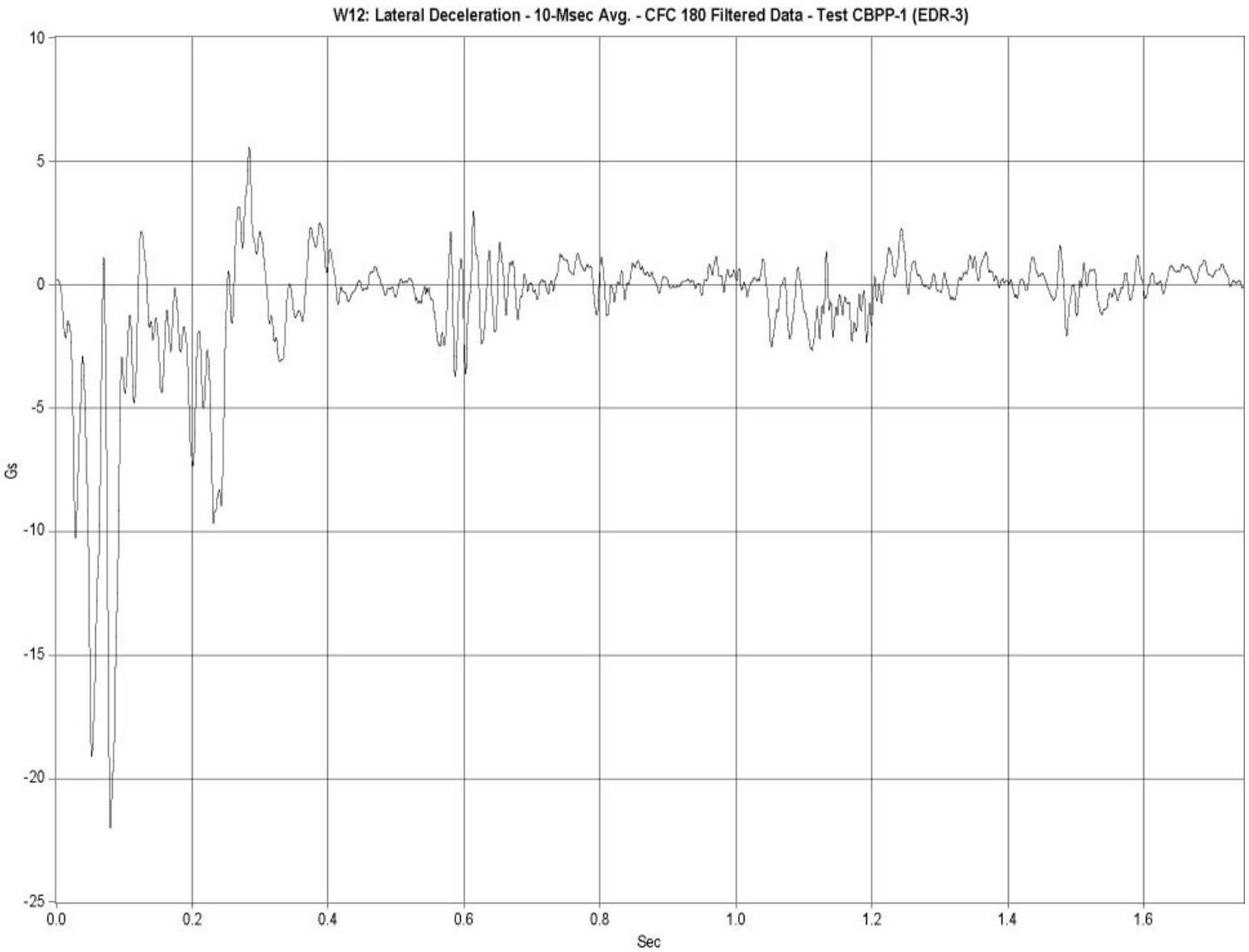


**Figure F-4. Graph of 10-ms Average Lateral Deceleration, Test CBPP-1**

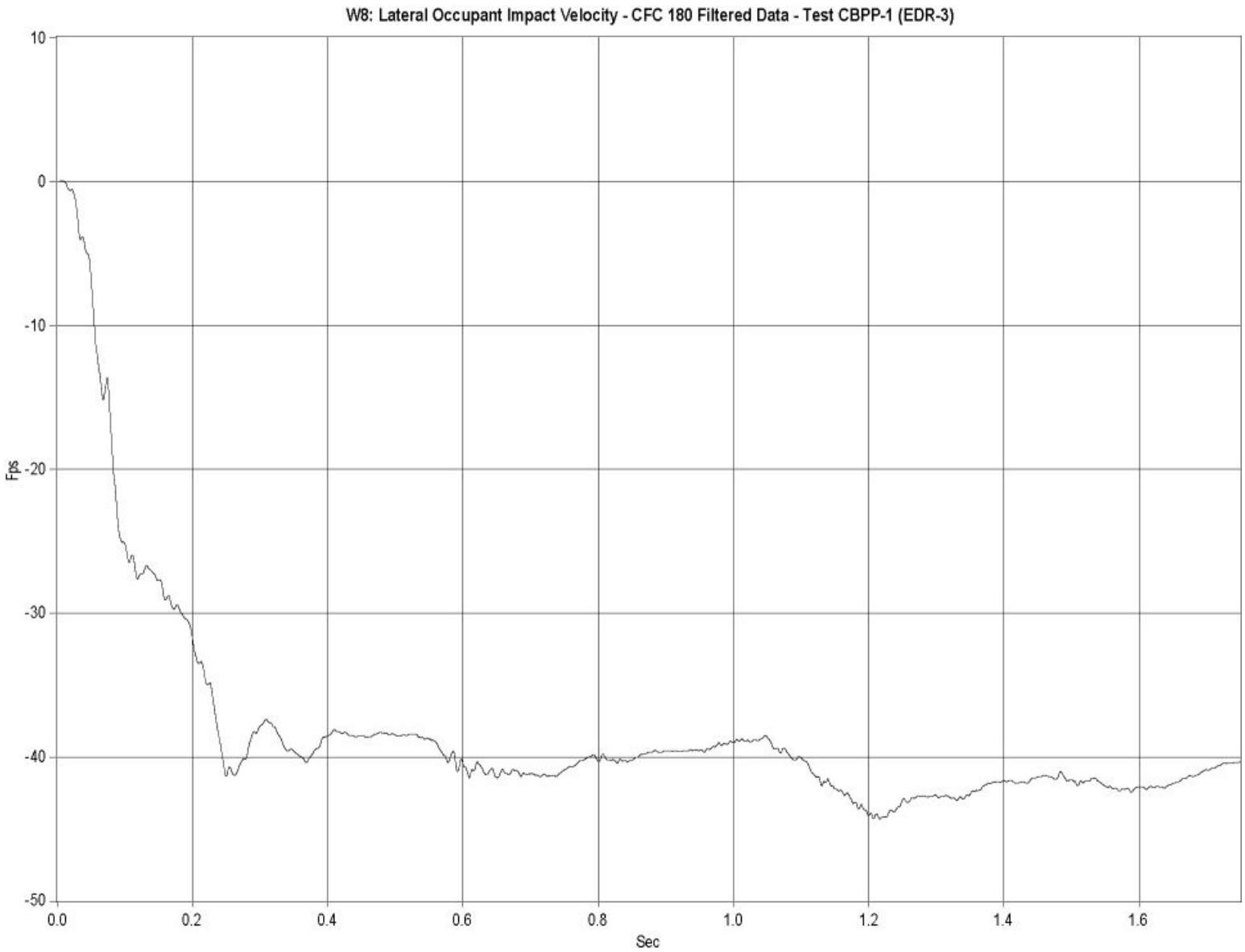


**Figure F-5. Graph of Lateral Occupant Impact Velocity, Test CBPP-1**

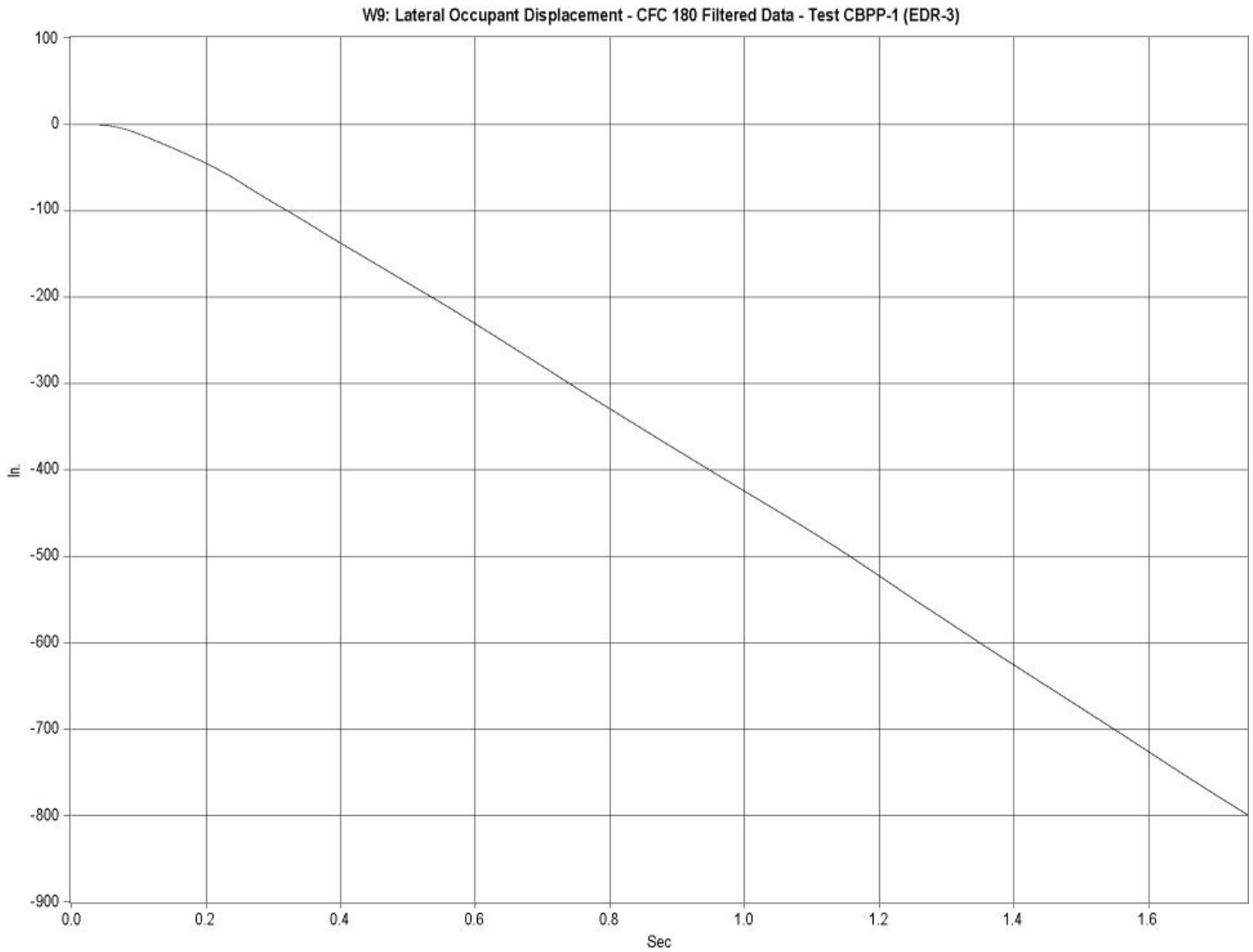


**Figure F-6. Graph of Lateral Occupant Displacement, Test CBPP-1**

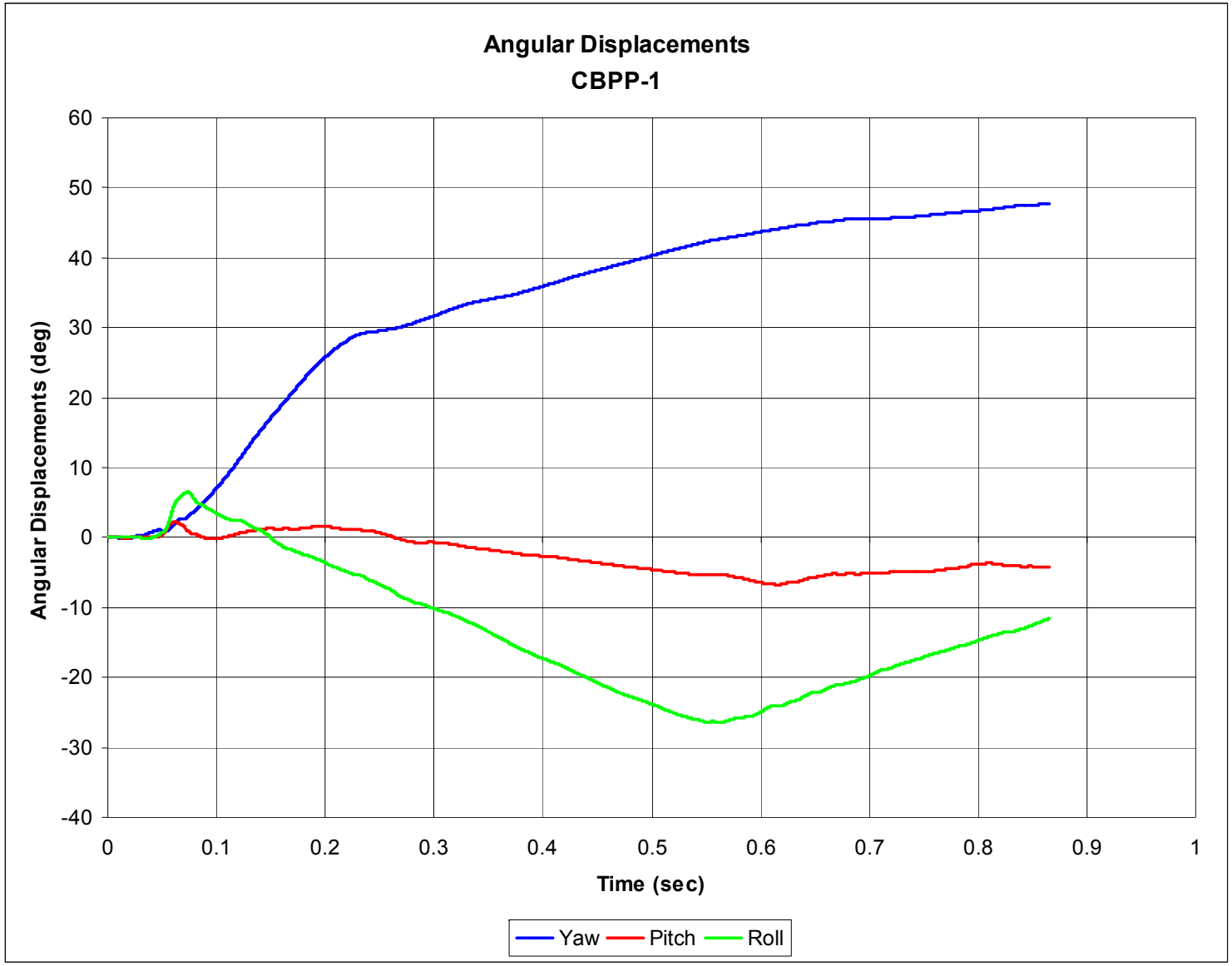


**Figure F-7. Graph of Vehicle Roll, Pitch, and Yaw Angular Displacements, Test CBPP-1**

## APPENDIX G. Strain Gauge Data

Figure G-1. Results of Strain Gauge B1, Test CBPP-1

Figure G-2. Results of Strain Gauge B2, Test CBPP-1

Figure G-3. Results of Strain Gauge B3, Test CBPP-1

Figure G-4. Results of Strain Gauge B4, Test CBPP-1

Figure G-5. Results of Strain Gauge B5, Test CBPP-1

Figure G-6. Results of Strain Gauge B6, Test CBPP-1

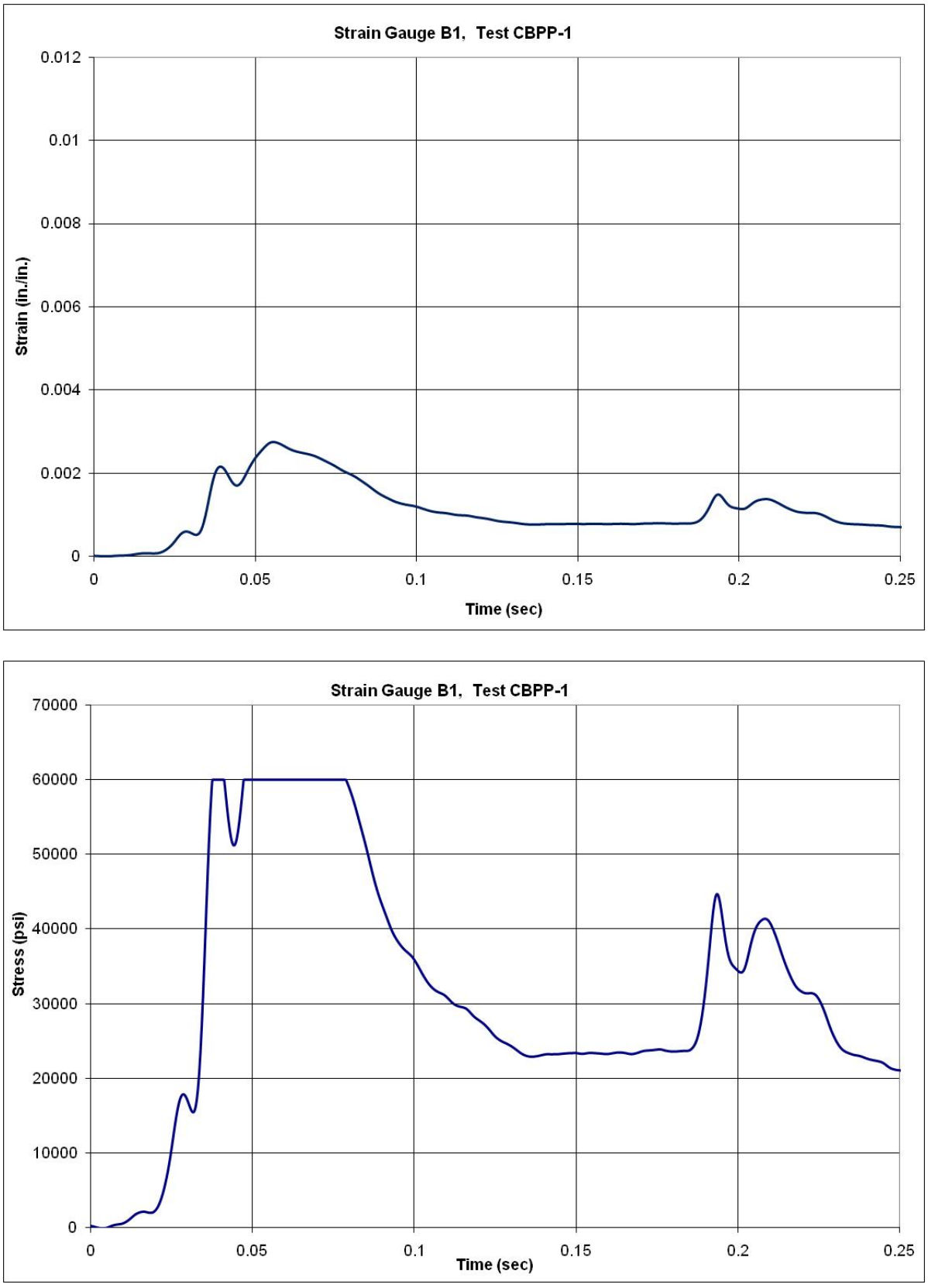


**Figure G-1. Results of Strain Gauge B1, Test CBPP-1**

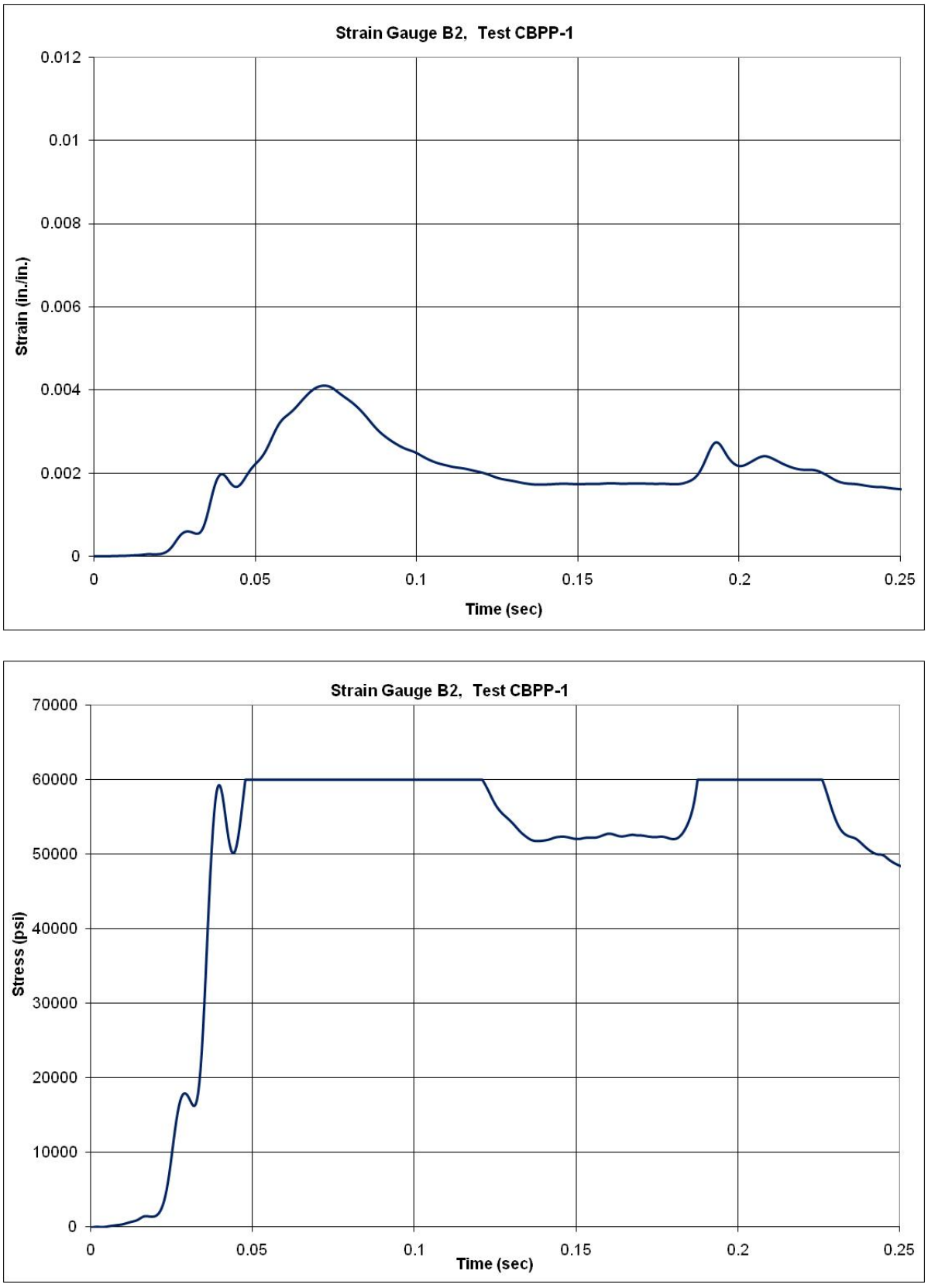


**Figure G-2. Results of Strain Gauge B2, Test CBPP-1**

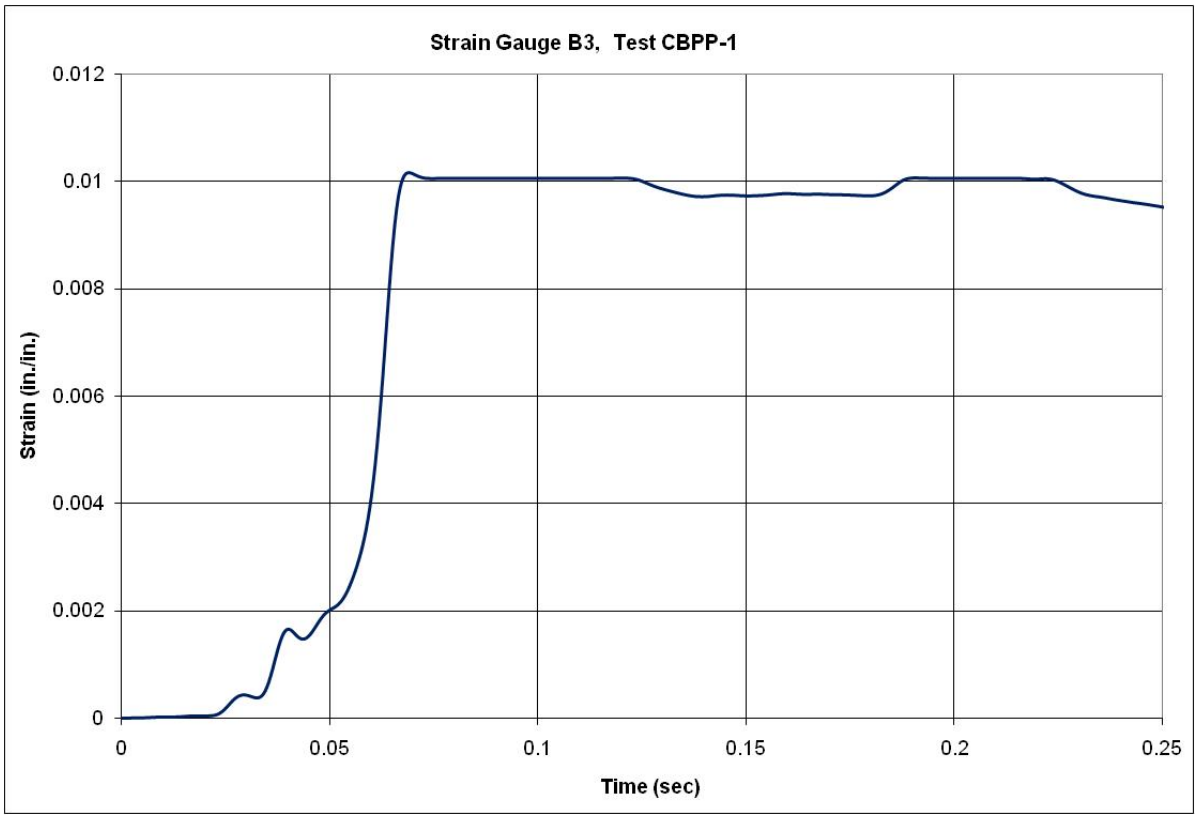


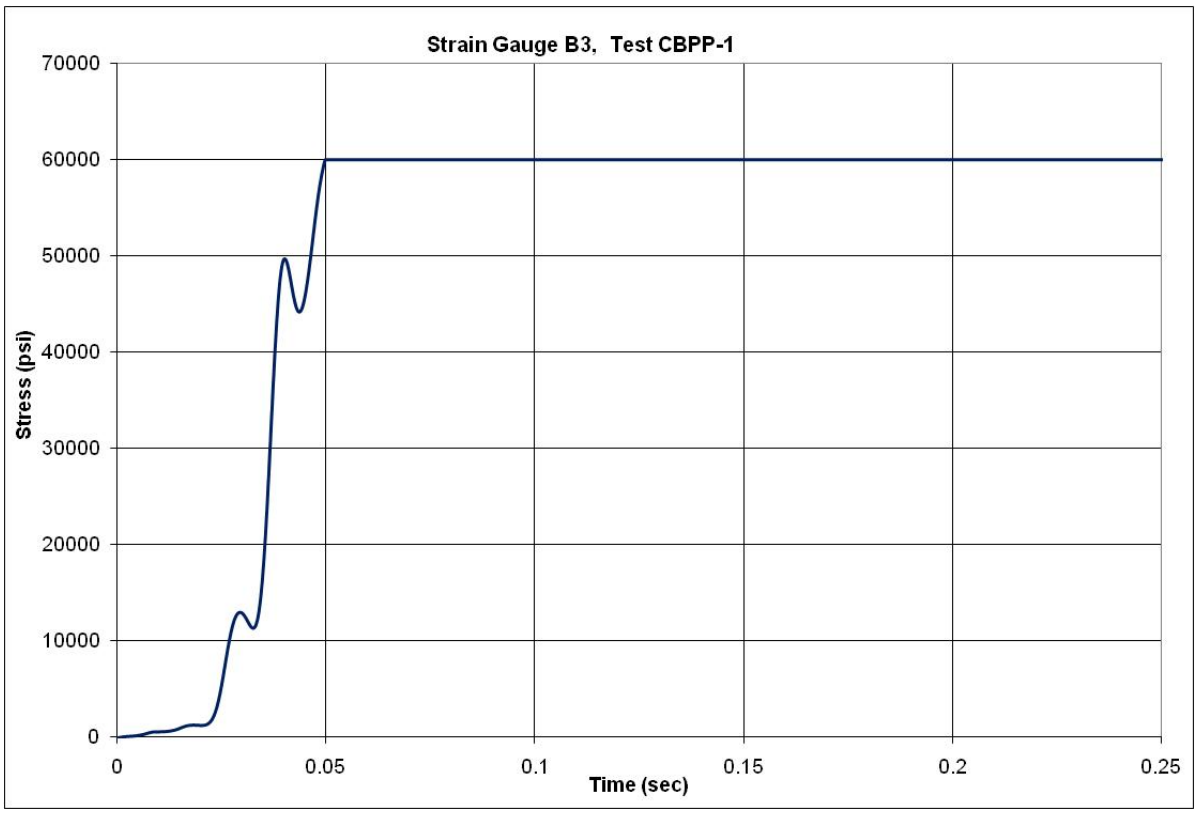


**Figure G-3. Results of Strain Gauge B3, Test CBPP-1**

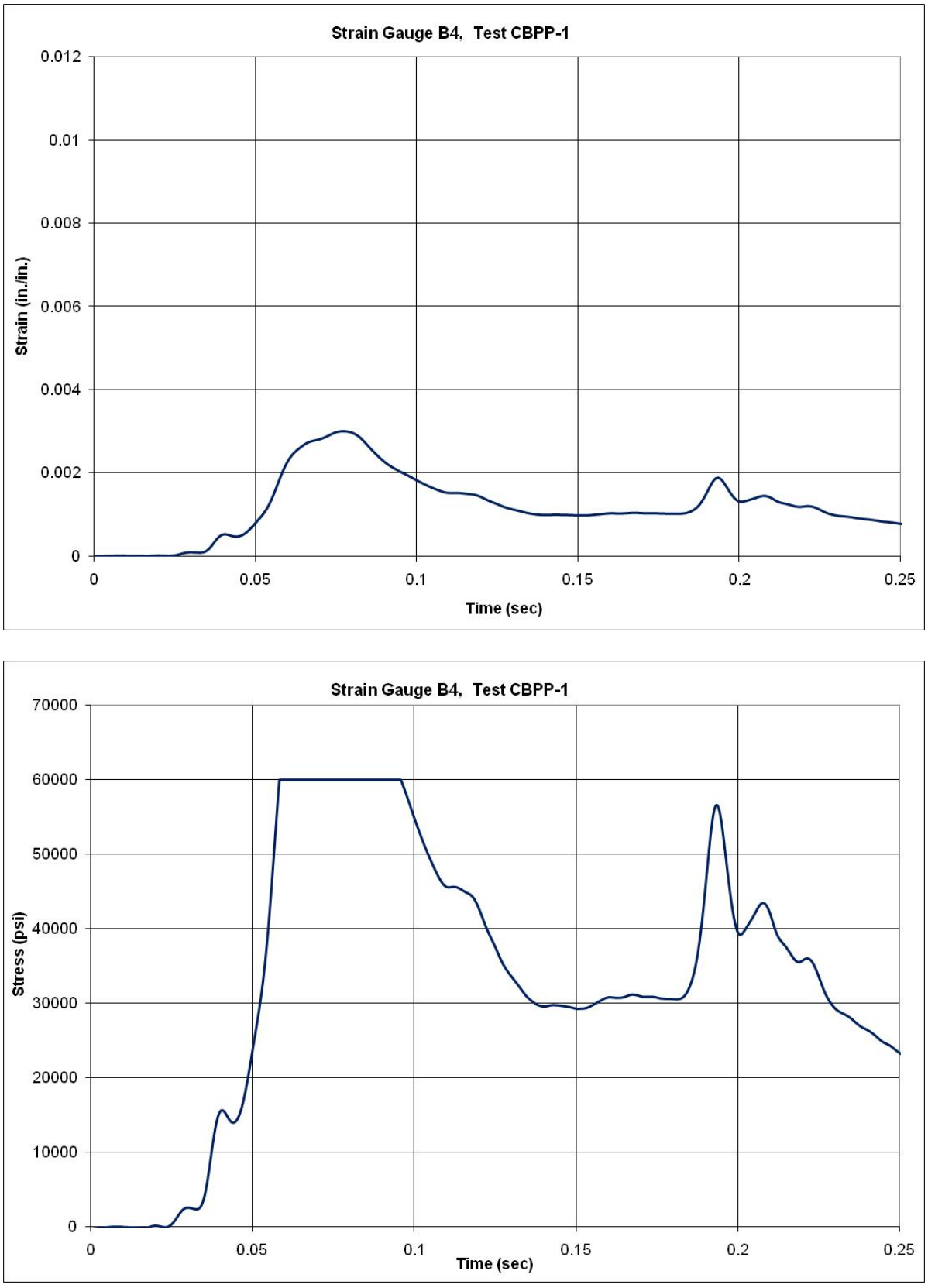


**Figure G-4. Results of Strain Gauge B4, Test CBPP-1**

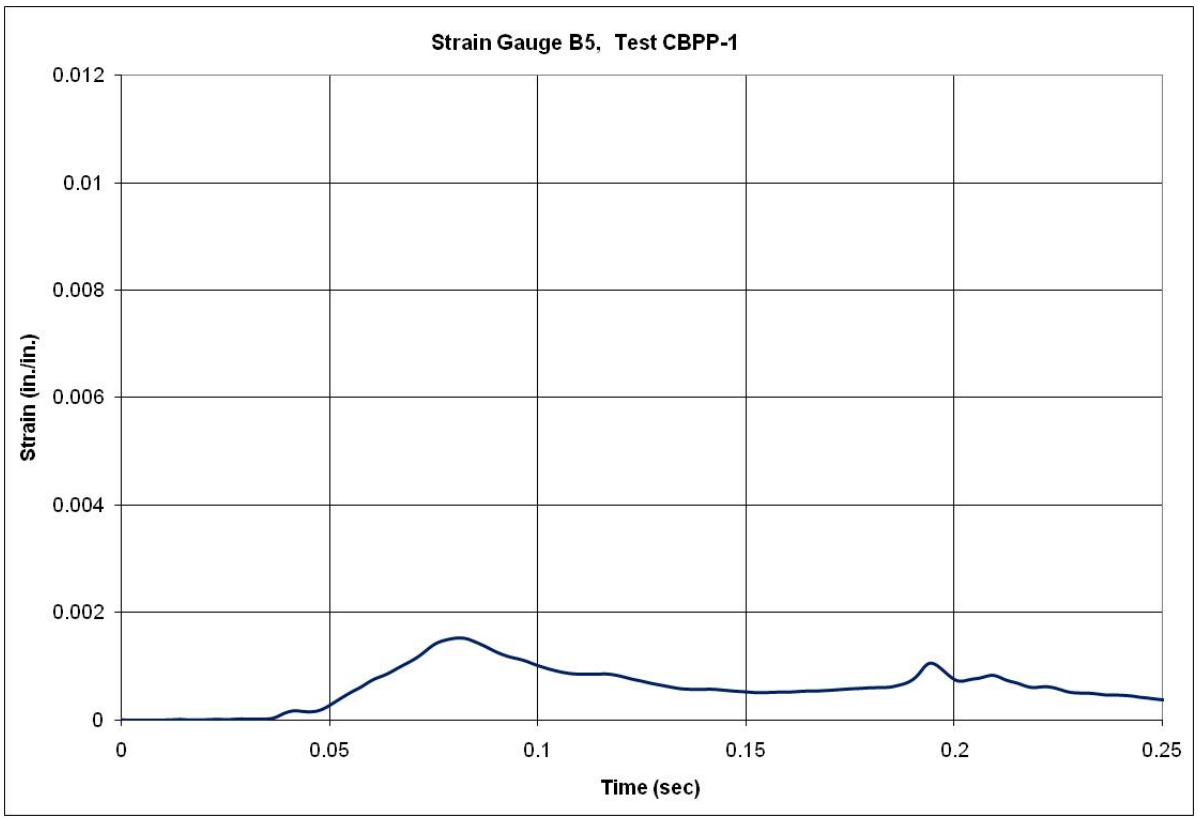


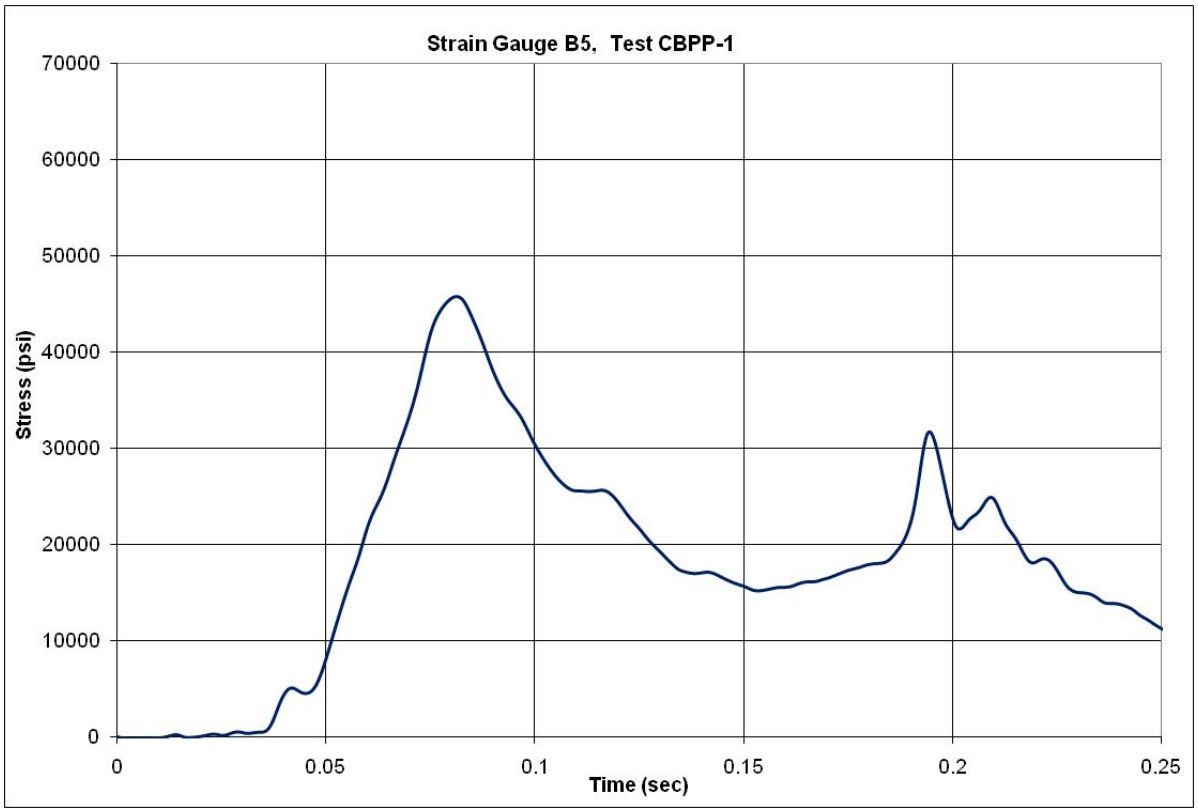


**Figure G-5. Results of Strain Gauge B5, Test CBPP-1**

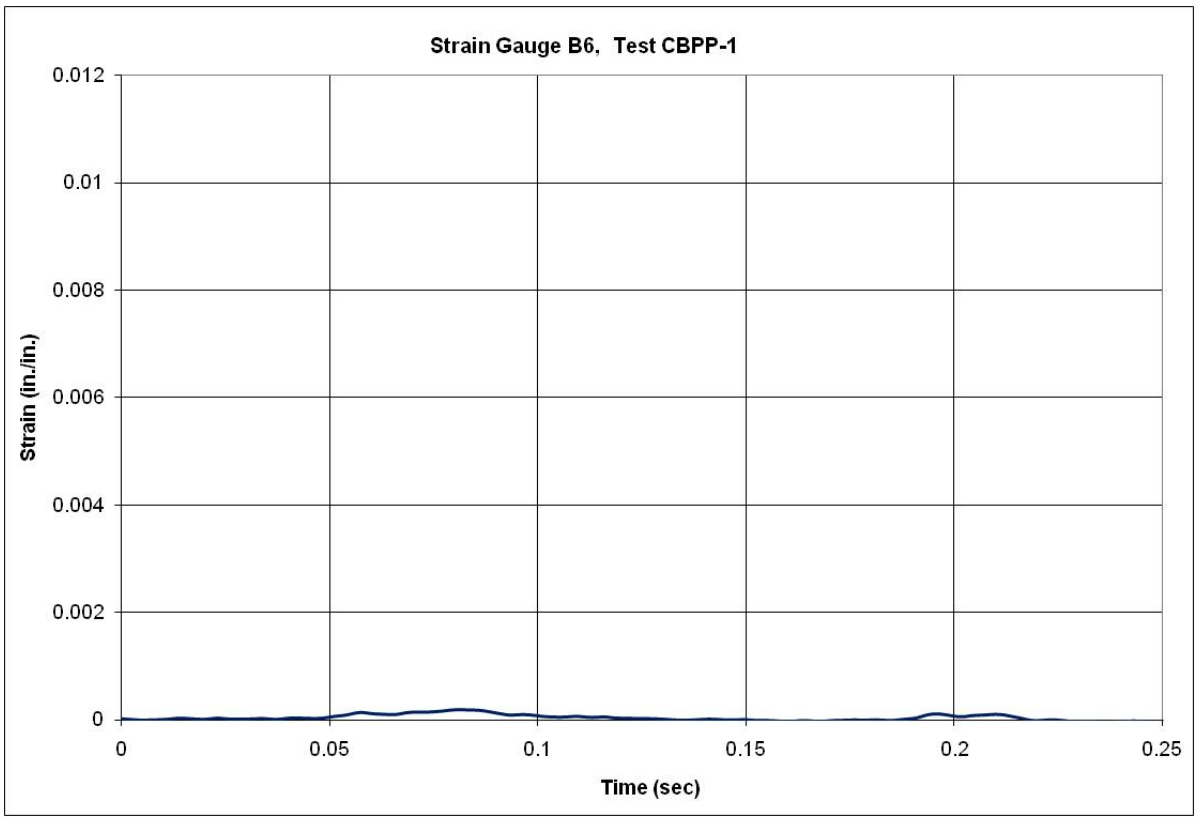


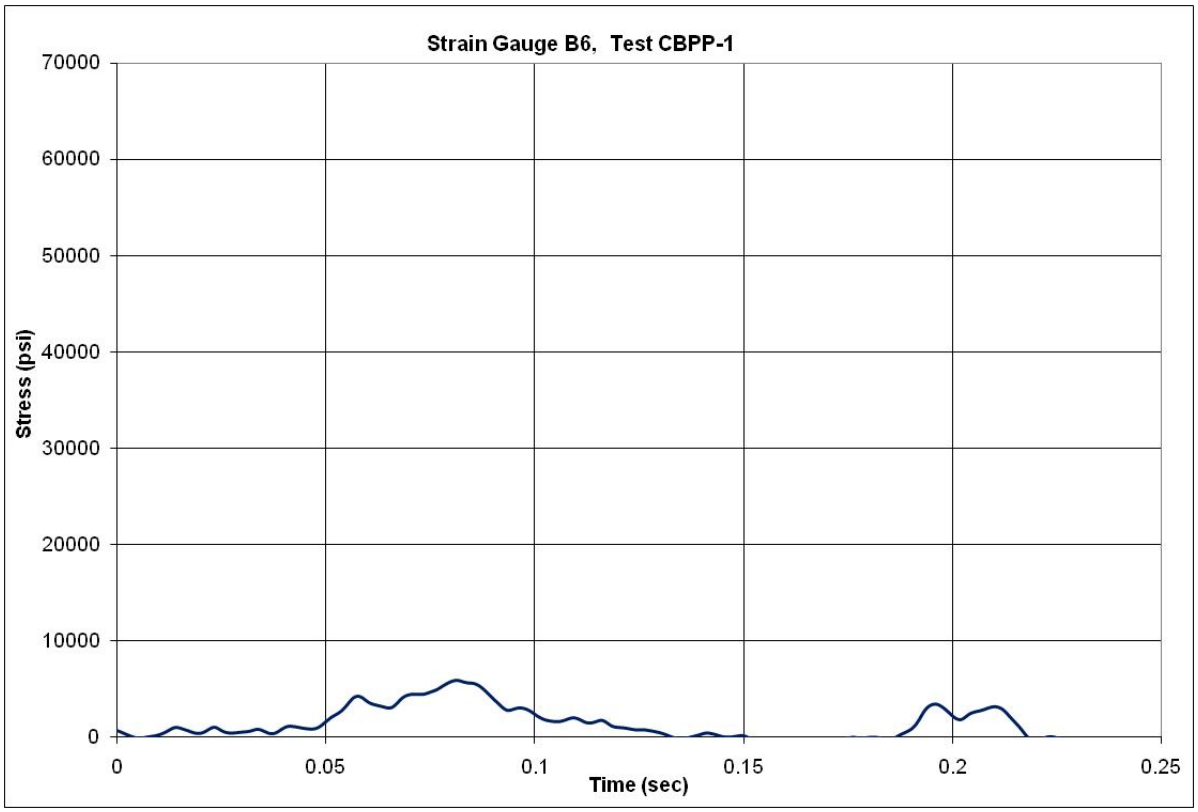


**Figure G-6. Results of Strain Gauge B6, Test CBPP-1**