Midwest States' Regional Pooled Fund Research Program
Fiscal Year 2004-2005 (Year 15)
Research Project Number SPR-3(017)
NDOR Sponsoring Agency Code RPFP-05-01

Development of a TL-5 Vertical Faced Concrete Median Barrier Incorporating Head Ejection Criteria

Submitted by

Scott K. Rosenbaugh, B.S.C.E, E.I.T.
Graduate Research Assistant

Dean L. Sicking, Ph.D., P.E.
Professor and MwRSF Director

Ronald K. Faller, Ph.D., P.E.
Research Assistant Professor

MIDWEST ROADSIDE SAFETY FACILITY
University of Nebraska-Lincoln
527 Nebraska Hall
Lincoln, Nebraska 68588-0529
(402) 472-0965

Submitted to

MIDWEST STATES' REGIONAL POOLED FUND PROGRAM
Nebraska Department of Roads
1500 Nebraska Highway 2
Lincoln, Nebraska 68502

MwRSF Research Report No. TRP-03-194-07

December 10, 2007

TECHNICAL REPORT DOCUMENTATION PAGE

1. Report No. TRP-03-194-07	2.	3. Recipient's Accession No.	
4. Title and Subtitle Development of a TL-5 Vertical Faced Concrete Median Barrier Incorporating Head Ejection Criteria		5. Report Date December 10, 2007 6.	
7. Author(s) Rosenbaugh, S.K., Sicking, D.L., and Faller, R.K.,		8. Performing Organization Report No. TRP-03-194-07	
9. Performing Organization Name and Address Midwest Roadside Safety Facility (MwRSF) University of Nebraska-Lincoln 527 Nebraska Hall Lincoln, Nebraska 68588-0529		10. Project/Task/Work Unit No. 11. Contract © or Grant (G) No. SPR-3 (017)	
12. Sponsoring Organization Name and Address Midwest States' Regional Pooled Fund Program Nebraska Department of Roads 1500 Nebraska Highway 2 Lincoln, NE 68502		13. Type of Report and Period Covered Final Report, 2004-2007 14. Sponsoring Agency Code RPFF-05-09	
15. Supplementary Notes Prepared in cooperation with U.S. Department of Transportation, Federal Highway Administration.			

16. Abstract (Limit: 200 words)

A concrete median barrier was designed as a cost efficient alternative to current barriers for use on roadways with heavy tractor-trailer traffic. The barrier geometry was configured to optimize small car and pickup truck safety. After reviewing over 100 previously conducted crash tests, it was determined that vertical faced barriers reduced the risk of vehicle rollover during impacts by eliminating tire climb and vehicle roll. Also, multiple crash test videos were utilized to create a head ejection envelope encompassing the extent of an occupant's head as it is ejected through the vehicle side window during impact. The top of the barrier was cut back to comply with this envelope. The internal steel reinforcement was optimized such that material costs were minimized while providing adequate strength. Slight alterations were made to ensure compatibility with common construction practices, such as slipforming. These alterations resulted from discussions with multiple contractors and members of various State Departments of Transportation. A 200 ft section of barrier was constructed and crash tested with an 80,000-lb tractor trailer in compliance with the NCHRP Report 350 requirements. The barrier performance satisfied all criteria under TL-5 impact conditions.

17. Document Analysis/Descriptors Highway Safety, TL-5, Concrete Median Barriers, Crash Testing, Tractor Trailer, Head Ejection		18. Availability Statement No restrictions. Document available from: National Technical Information Services, Springfield, Virginia 22161	
19. Security Class (this report) Unclassified	20. Security Class (this page) Unclassified	21. No. of Pages 355	22. Price

DISCLAIMER STATEMENT

The contents of this report reflect the views of the authors who are responsible for the facts and the accuracy of the data presented herein. The contents do not necessarily reflect the official views nor policies of the State Highway Departments participating in the Midwest States' Regional Pooled Fund Research Program nor the Federal Highway Administration. This report does not constitute a standard, specification, or regulation.

ACKNOWLEDGMENTS

The authors wish to acknowledge several sources that made a contribution to this project: (1) the Midwest States' Regional Pooled Fund Program funded by the Connecticut Department of Transportation, Illinois Department of Transportation, Iowa Department of Transportation, Kansas Department of Transportation, Minnesota Department of Transportation, Missouri Department of Transportation, Nebraska Department of Roads, New Jersey Department of Transportation, Ohio Department of Transportation, South Dakota Department of Transportation, Wisconsin Department of Transportation, and Wyoming Department of Transportation for sponsoring this project, and (2) MwRSF personnel for conducting the crash test.

Acknowledgment is also given to the following individuals who made a contribution to the completion of this research project.

Midwest Roadside Safety Facility

J.R. Rohde, Ph.D., P.E., Associate Professor
J.D. Reid, Ph.D., Professor
K.A. Polivka, M.S.M.E., E.I.T., Research Associate Engineer
R.W. Bielenberg, M.S.M.E., E.I.T., Research Associate Engineer
J.C. Holloway, M.S.C.E., E.I.T., Research Manager
C.L. Meyer, B.S.M.E., E.I.T., Research Engineer II
A.T. Russell, B.S.B.A., Laboratory Mechanic II
K.L. Krenk, B.S.M.A, Field Operations Manager
A.T. McMaster, Laboratory Mechanic I
Undergraduate and Graduate Assistants

Connecticut Department of Transportation

Dionysia Oliveira, Transportation Engineer 3

Illinois Department of Transportation

David Piper, P.E., Highway Policy Engineer

Iowa Department of Transportation

David Little, P.E., Assistant District Engineer
Deanna Maifield, Methods Engineer

Kansas Department of Transportation

Ron Seitz, P.E., Bureau Chief
Rod Lacy, P.E., Road Design Leader

Minnesota Department of Transportation

Michael Elle, P.E., Design Standard Engineer

Missouri Department of Transportation

Joseph G. Jones, P.E., Technical Support Engineer

Nebraska Department of Roads

Amy Starr, Research Engineer
Phil Tenhulzen, P.E., Design Standards Engineer
Jodi Gibson, Research Coordinator

New Jersey Department of Transportation

Kiran Patel, P.E., P.M.P., C.P.M., Deputy State Transportation Engineer

Ohio Department of Transportation

Dean Focke, P.E., Standards Engineer

South Dakota Department of Transportation

David Huft, Research Engineer
Bernie Clocksin, Lead Project Engineer
Paul Oien, Project Engineer

Wisconsin Department of Transportation

John Bridwell, Standards Development Engineering
Patrick Fleming, Standards Development Engineering

Wyoming Department of Transportation

William Wilson, P.E., Standards Engineer

Federal Highway Administration

John Perry, P.E. Nebraska Division Office
Danny Briggs, Nebraska Division Office

Dunlap Photography

James Dunlap, President and Owner

Nebraska State Patrol

Scott Olson, Trooper

TABLE OF CONTENTS

TABLE OF CONTENTS vi
LIST OF FIGURES viii
LIST OF TABLES xi
1 INTRODUCTION 1
1.1 Background 1
1.2 Objectives 6
2 LITERATURE REVIEW 7
2.1 Concrete Median Barrier Geometries 7
2.2 Vehicle Rollovers 8
2.3 Head Ejection 9
2.4 Design Loads / Barrier Strengths 10
2.5 Evaluation of Highway Barriers 11
2.6 Existing TL-5 Concrete Median Barriers 12
2.7 Previous Full Scale TL-5 Crash Tests 12
3 RESEARCH APPROACH 15
4 BARRIER SHAPE STUDY 17
4.1 Introduction 17
4.2 Full-Scale Crash Test Data 23
4.3 Comparison of Barrier Shape Results 34
4.4 Comparison of Shape Results to NCHRP Report 350 Safety Criteria 36
4.5 Barrier Shape Recommendation 38
5 Head Ejection Study 40
5.1 Introduction 40
5.2 Video Analysis Procedure 41
5.3 Head Ejection Measurements from Small Cars 46
5.4 Head Ejection Measurements from Pickups 58
5.5 Placement of Ejection Envelopes 66
5.6 Envelope Adjustments for Vehicle Movement 69
5.7 Head Ejection Interpolation for Mid-Size Vehicles 73
5.8 Uses and Limitations of the Head Ejection Envelope 84
6 BARRIER SHAPE DESIGN 86
6.1 Barrier Height 86
6.2 Barrier Face Geometry 88
6.3 Longitudinal Asperities Option 91
6.4 Geometric Alterations for Slipforming 93
7 BARRIER REINFORCEMENT DESIGN 98
7.1 Introduction 98
7.2 Shape of Steel Reinforcement 98
7.2.1 Stirrup Use Decision 99
7.2.2 General Stirrup Shape 100
7.2.3 General Anchorage Design 102
7.3 Barrier Optimization Factors 105
7.3.1 Barrier Width 105

7.3.2 Longitudinal Rebar 107
7.3.3 Stirrup Rebar 108
7.4 Barrier Capacity Calculations 113
7.5 Optimum Barrier Design Requirements 117
7.6 Barrier Optimization Results 118
7.7 Barrier End Section Design 127
7.7.1 End Section Strength Calculations 128
7.7.2 Barrier End Section Optimization 129
7.8 End Section Substructure Design 134
8 FULL-SCALE CRASH TEST PROGRAM 138
8.1 Test Requirements 138
8.2 Evaluation Criteria 139
8.3 Barrier Design Details 142
8.3.1 Barrier Substructure 142
8.3.2 Barrier Design 143
8.3.3 Impact Point 145
8.4 Test Facility 156
8.5 Vehicle Tow and Guidance Systems 156
8.6 Test Vehicle 156
8.7 Data Acquisition Systems 161
8.7.1 Accelerometers 161
8.7.2 Rate Transducers 162
8.7.3 High Speed Photography 162
8.7.4 Pressure Tape Switches 163
8.8 Crash Test TL5CMB-2 165
8.8.1 Test Description 165
8.8.2 Barrier Damage 167
8.8.3 Vehicle Damage 170
8.8.4 Accelerometer and Rate Transducer Data 171
8.8.5 Discussion 172
9 ALTERNATIVE ANCHORAGE DESIGNS 202
9.1 Anchoring with a Reinforced Concrete Footing 202
9.2 Anchoring to a Reinforced Concrete Slab 203
10 COMPARISON OF TL-5 CONCRETE MEDIAN BARRIERS 207
11 SUMMARY AND CONCLUSIONS 213
12 REFERENCES 216
13 APPENDICES 225
Appendix A. Interior Section Barrier Configurations and Calculations 226
Appendix B. Barrier End Section Configurations and Calculations 277
Appendix C. Torsion Reinforcement Design in Footer – End Section 328
Appendix D. Barrier Design Drawings in English–Units 332
Appendix E. Summary of Test TL5CMB-2 in English-Units 338
Appendix F. Accelerometer and Rate Transducer Data, Test TL5CMB-2 340
Appendix G. Alternate Footing Anchorage Design Calculations 352

LIST OF FIGURES

Figure 1. Evolution of safety shape concrete barriers..... 2
Figure 2. Constant Slope Barriers..... 4
Figure 3. Bridge Rail Designed with Cut-Out Section to Prevent Head Slap [13]..... 10
Figure 4. Geometry of the GM Shape Barrier 18
Figure 5. New Jersey Shape and F – Shape Barriers 20
Figure 6. California Type 60 Single Slope and Vertical Shape Barriers 22
Figure 7. General Shape of an Open Concrete Rail..... 22
Figure 8. Lateral and Vertical Measurements from the Bottom of the Window 43
Figure 9. Location and label of three points measured. 45
Figure 10. Plot of Data Measurements for Test 418048-4..... 48
Figure 11. Plot of Data Measurements for Test 418048-5..... 49
Figure 12. Plot of Data Measurements for Test I2-3 50
Figure 13. Plot of Data Measurements for Test 533 51
Figure 14. Plot of Data Measurements for Test 404311-1..... 52
Figure 15. Plot of Data Measurements for Test 511 53
Figure 16. Plot of Data Measurements for Test 544 54
Figure 17. Plot of Data Measurements for Test 531 55
Figure 18. Ejection Envelope Encompassing All Small Car Data..... 57
Figure 19. Measured Points to Describe Maximum Vertical Position 60
Figure 20. Plot of Data Measurements for Test 404201-8..... 61
Figure 21. Plot of Data Measurements for Test 404211-4..... 62
Figure 22. Plot of Data Measurements for Test 401021-1..... 63
Figure 23. Ejection Envelope Boundaries Encompassing All Pickup Data. 65
Figure 24. Assembly of Head Ejection Envelope..... 69
Figure 25. Head Ejection Envelope with Vehicle Movement Adjustments (SI)..... 72
Figure 26. Head Ejection Envelope with Vehicle Movement Adjustments (English) 73
Figure 27. Measured Lateral Ejection vs. Head Height and Boundary Line..... 76
Figure 28. Measured Vertical Ejection Position vs. Head Height and Boundary Line 77
Figure 29. Measurements Taken to Determine Head Height 78
Figure 30. Predicted Maximum Ejections and the Adjusted Envelope (SI)..... 82
Figure 31. Predicted Maximum Ejections and the Adjusted Envelope (English) 83
Figure 32. Head Ejection Envelope and Dimensions 84
Figure 33. Forces Acting on a Tractor Trailer during Impact..... 87
Figure 34. Barrier Face Geometry Options..... 89
Figure 35. Barrier Face Geometry 90
Figure 36. Possible Longitudinal Asperity Options for the Barrier Face 91
Figure 37. Barrier Geometry after Slipforming Alterations. 95
Figure 38. Examples of Texturing [38] and Vertical Asperities [79] 97
Figure 39. Stirrup Shape Possibilities Explored 101
Figure 40. Anchorages of Freestanding Cage vs. Stirrups Cast into Base Slab 103
Figure 41. Rebar Layouts for Different Numbers of Longitudinal Bars 107
Figure 42. Illustrating the Restriction of Large Bars in Small Areas 110

Figure 43. Yield Line Failure Shape Assumption and Bending Moments 114
Figure 44. Design A, One of Three Top Designs 124
Figure 45. Design B, One of Three Top Designs 125
Figure 46. Design C, One of Three Top Designs 126
Figure 47. Assumed Failure Pattern of Barrier End Section 128
Figure 48. Barrier End Section Configuration 133
Figure 49. Footer and Barrier End Section Design 136
Figure 50. Footer and Barrier End Section Design (English - Units) 137
Figure 51. Layout for TL-5 Concrete Median Barrier 146
Figure 52. TL-5 Concrete Median Barrier Interior Section Design Details 147
Figure 53. TL-5 Concrete Median Barrier End Section Design Details 148
Figure 54. TL-5 Concrete Median Barrier Slipform Design Details 149
Figure 55. TL-5 Concrete Median Barrier Rebar Design Details 150
Figure 56. Reinforcement and Casting of Footer with Barrier End Section Stirrups 151
Figure 57. TL-5 Median Barrier Reinforcement, Lap Splices, and Dowel Tie Downs 152
Figure 58. TL-5 Median Barrier Construction 153
Figure 59. TL-5 Median Barrier Construction – Cold Joint 154
Figure 60. TL-5 Concrete Median Barrier 155
Figure 61. Test Vehicle, Test TL5CMB-2 158
Figure 62. Vehicle Dimensions, Test TL5CMB-2 159
Figure 63. Vehicle Target Locations, Test TL5CMB-2 160
Figure 64. Location of Cameras, Test TL5CMB-2 164
Figure 65. Summary of Test Results and Sequential Photographs, Test TL5CMB-2 174
Figure 66. Additional Sequential Photographs, Behind, Test TL5CMB-2 175
Figure 67. Additional Sequential Photographs, Upstream, Test TL5CMB-2 176
Figure 68. Additional Sequential Photographs, Downstream, Test TL5CMB-2 177
Figure 69.Additional Sequential Photographs, Behind, Test TL5CMB-2 178
Figure 70. Additional Sequential Photographs, Test TL5CMB-2 179
Figure 71. Impact Location, Test TL5CMB-2 180
Figure 72. Vehicle Final Position and Trajectory Marks, Test TL5CMB-2 181
Figure 73. Barrier Damage, Test TL5CMB-2 182
Figure 74. Barrier Cracks Upstream of Impact, Test TL5CMB-2 183
Figure 75. Barrier Cracks 4.6 m (15 ft) from Upstream End, Test TL5CMB-2 184
Figure 76. Barrier Cracks 5.8 m (19 ft) from Upstream End, Test TL5CMB-2 185
Figure 77. Barrier Cracks 8.4 and 8.7 m (27.5 and 28.5 ft) from Upstream End, Test TL5CMB-2 186
Figure 78. Barrier Cracks 12.2 m (40 ft) from Upstream End, Test TL5CMB-2 187
Figure 79. Barrier Cracks 15.8 m (52.5 ft) from Upstream End, Test TL5CMB-2 188
Figure 80. Barrier Damage, Gouges 9.1 - 11.0 m (30 - 36 ft) from Upstream End, Test TL5CMB-2 189
Figure 81. Barrier Damage to Top Protrusion, Test TL5CMB-2 190
Figure 82. Barrier Damage to Top Protrusion 12.2 – 14.3 m (40 – 47 ft) from Upstream End, Test TL5CMB-2 191
Figure 83. Tire Marks from Middle to Downstream End, Test TL5CMB-2 192

Figure 84. Front-Side Barrier Asphalt Gaps Near Impact, Test TL5CMB-2 193
Figure 85. Vehicle Damage, Test, TL5CMB-2 194
Figure 86. Front Bumper Damage, Test TL5CMB-2 195
Figure 87. Front Right Tractor Damage, Test TL5CMB-2 196
Figure 88. Right Side Tractor Damage, Test TL5CMB-2 197
Figure 89. Left Side Tractor Damage, Test TL5CMB-2 198
Figure 90. Vehicle Damage to Front Tandems, Test TL5CMB-2 199
Figure 91. Right Side Trailer Damage, Test TL5CMB-2 200
Figure 92. Damage to Rear of Vehicle, Test TL5CMB-2 201
Figure 93. TL-5 Concrete Median Barrier Anchored to a Longitudinal Reinforced Concrete Footer 205
Figure 94. TL-5 Concrete Median Barrier Anchored to Slab 206
Figure 95. Reinforced Concrete Tall Wall Safety Shaped Barrier [18, 19] 208
Figure 96. Non-Reinforced Concrete Tall Wall Safety Shaped Barrier [18, 20] 209
Figure 97. Single Slope Concrete Barrier [18] 211
Figure D-1. Layout for TL-5 Concrete Median Barrier 333
Figure D-2. TL-5 Concrete Median Barrier Design Details 334
Figure D-3. TL-5 Concrete Median Barrier End Section Design Details 335
Figure D-4. TL-5 Concrete Median Barrier Slipform Design Details 336
Figure D-5. TL-5 Concrete Median Barrier Rebar Design Details 337
Figure E-1. Summary of Test Results and Sequential Photographs, Test TL5CMB-2 339
Figure F-1. Graph of Longitudinal Deceleration (CFC 60 Filtered) of Trailer, Test TL5CMB-2 341
Figure F-2. Graph of 50-ms Average Longitudinal Deceleration (CFC 60 Filtered) of Trailer, Test TL5CMB-2 342
Figure F-3. Graph of Longitudinal Change in Velocity (CFC 180 Filtered) of Trailer, Test TL5CMB-2 343
Figure F-4. Graph of Lateral Deceleration (CFC 60 Filtered) of the Trailer, Test TL5CMB-2. 344
Figure F-5. Graph of 50-ms Average Lateral Deceleration (CFC 60 Filtered) of Trailer, Test TL5CMB-2 345
Figure F-6. Graph of Lateral Change in Velocity (CFC 180 Filtered) of Trailer, Test TL5CMB-2 346
Figure F-7. Graph of Vertical Acceleration (CFC 60 Filtered) of the Trailer, Test TL5CMB-2 347
Figure F-8. Graph of 50-ms Average Vertical Deceleration (CFC 60 Filtered) of Trailer, Test TL5CMB-2 348
Figure F-9. Graph of Vertical Change in Velocity (CFC 180 Filtered) of Trailer, Test TL5CMB-2 349
Figure F-10. Graph of Trailer Roll, Yaw, and Pitch (Gyro Data), Test TL5CMB-2 350
Figure F-11. Graph of Tractor Roll (Film Analysis), Test TL5CMB-2 351

LIST OF TABLES

Table 1. List of Previous Full Scale TL-5 Crash Tests 14
Table 2. Vehicle and Impact Condition for Each Crash Test Group 24
Table 3. Small car tests impacting at 96.6-100 km/h (60-62.1 mph) and 20° (part 1) 26
Table 4. Pickup tests impacting at 100 km/h (62.1 mph) and 25° (part 1) 28
Table 5. Pickup tests impacting at 96.6 km/h (60 mph) and 20° (part 1) 30
Table 6. Sedan tests impacting at 96.6 km/h (60 mph) and 25° (part 1) 32
Table 7. Barrier Shape Comparisons by Impact Conditions 35
Table 8. Crash Tests Resulting in Vehicle Rollover 37
Table 9. List of Small Car Tests Used to Describe Head Ejection 47
Table 10. Data Measurements for Test 418048-4 48
Table 11. Data Measurements for Test 418048-5 49
Table 12. Data Measurements for Test I2-3 50
Table 13. Data Measurements for Test 533 51
Table 14. Data Measurements for Test 404311-1 52
Table 15. Data Measurements for Test 511 53
Table 16. Data Measurements for Test 544 54
Table 17. Data Measurements for Test 531 55
Table 18. List of Pickup Tests Used to Describe Head Ejection 59
Table 19. Data Measurements for Test 404201-8 61
Table 20. Data Measurements for Test 404211-4 62
Table 21. Data Measurements for Test 401021-1 63
Table 22. Heights to the Bottom of the Side Window 68
Table 23. Measured Vertical Movement of Side Window During Impact (SI) 71
Table 24. Measured Vertical Movement of Side Window During Impact (English) 71
Table 25. Head Heights from the Window Base and Ejection Measurements 75
Table 26. Vehicle Measurements and Head Height Results 79
Table 27. Predicted Results for Maximum Lateral and Minimum Vertical Ejection 81
Table 28. List of Previous Successful Tractor Trailer Crash Tests. 88
Table 29. Concrete Cost per Foot of Barrier as a Function of Barrier Width 106
Table 30. Amount of Longitudinal Steel per Length for Various Configurations 108
Table 31. Stirrup Design Requirements per Bar Size 111
Table 32. Stirrup Lengths as a Function of Barrier Width and Bar Size (SI) 111
Table 33. Stirrup Lengths as a Function of Barrier Width and Bar Size (English) 111
Table 34. Mass of Stirrup per Meter of Barrier for All Combinations (SI) 112
Table 35. Weight of Stirrup per Foot of Barrier for All Combinations (English) 113
Table 36. Calculated Strength Capacities for Previous TL-5 Barriers 118
Table 37. Optimum Designs by Width and Stirrup Combination (SI) 120
Table 38. Optimum Designs by Width and Stirrup (English Units) 122
Table 39. Optimum Designs by Width and Stirrup Configuration (SI) 130
Table 40. Optimum Designs by Width and Stirrup Configuration (English-Units) 131
Table 41. NCHRP Report 350 Test Level 5 Crash Test Conditions 139
Table 42. NCHRP Report No. 350 Evaluation Criteria for Crash Testing 141

Table 43. Summary of Safety Performance Evaluation Results 173
Table 44. Cantilever Moments of the Three Most Efficient Designs 203
Table 45. Comparison of TL-5 Concrete Median Barriers (SI)..... 212
Table 46. Comparison of TL-5 Concrete Median Barriers (English – Units) 212
Table A-1. Interior Section Strength and Cost Calculations - All Configurations 227
Table B-1. Barrier End Section Strength and Cost Calculations - All Configurations..... 278

1 INTRODUCTION

1.1 Background

Narrow medians and high traffic volumes warrant the use of longitudinal median barriers to separate opposing lanes of traffic. Narrow medians do not offer the driver of an errant vehicle sufficient time to recover and steer the vehicle back into the proper lane. As a result, cross-over accidents are common. Cross-over accidents often involve multiple vehicles and head-on collisions. Thus, cross-over accidents are very severe and have a high fatality risk. In fact, a study conducted by the Iowa Safety Management System found that between 1990 and 1999 cross-median crashes made up only 2.4 percent of all interstate crashes, yet these crashes resulted in 32.7 percent of all interstate fatalities [1].

In heavy traffic volume situations, the risk of tractor trailer cross-over crashes can become very high. Further, the severity of these crashes can cause multiple fatalities. Thus, there is a need for median barriers capable of containing tractor trailer trucks. The high force levels associated with redirecting a fully loaded tractor trailer merit a strong, rigid barrier. Steel barriers have been shown to be extraordinarily expensive when designed to withstand heavy truck impacts [2]. Therefore, concrete median barriers are used to prevent heavy trucks from crossing over into the opposing lanes of traffic.

Most concrete barrier shapes evolved from a barrier developed by General Motors and referred to as the GM shape. The GM shape was designed with the intension of minimizing vehicle sheet metal damage during low angle impacts [3]. The barrier incorporates a shallow lower slope and a steep upper slope. During low angle impacts, the tires climb the lower slope and redirect the vehicle without any sheet metal contact with the barrier. The upper slope serves

to redirect vehicles impacting at higher angles. The GM shape and all of its descendants are called safety shaped barriers. Figure 1 shows the GM shape along with the other concrete barrier shapes which have evolved from it.

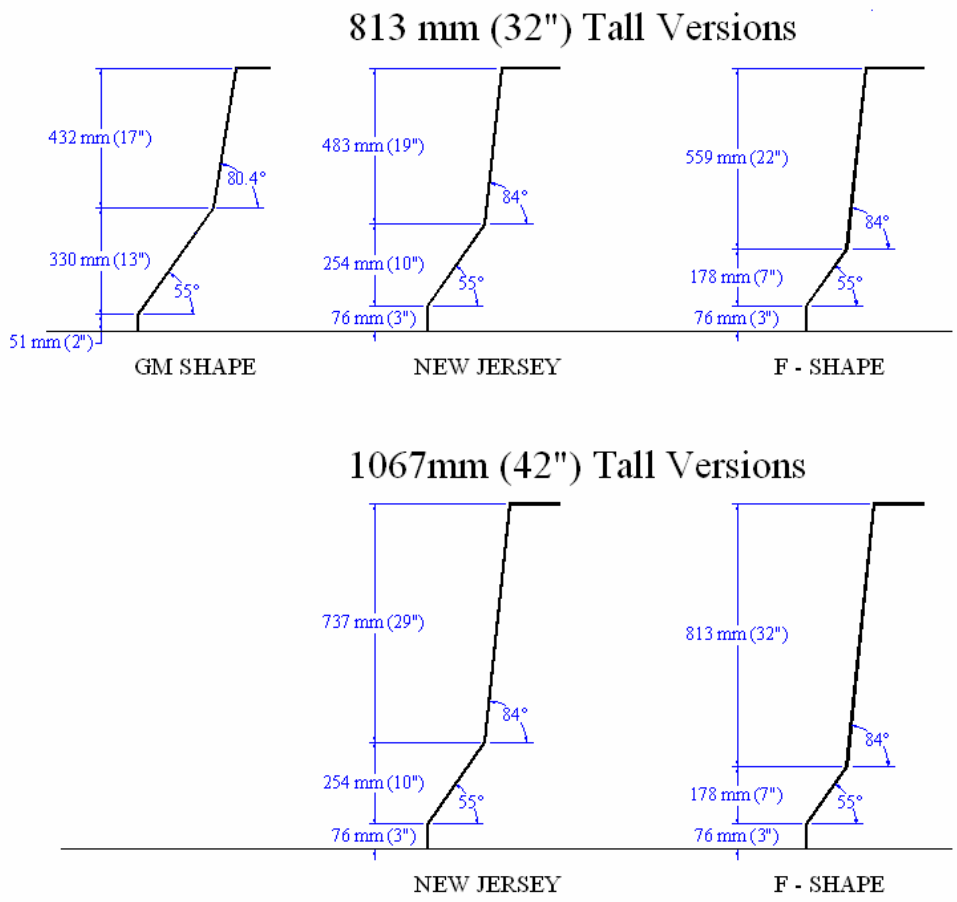

Figure 1. Evolution of safety shape concrete barriers

In the late 1950's and early 1960's, the New Jersey State Department of Transportation developed what came to be called the New Jersey shape concrete barrier through years of crash testing and shape consideration [4, 5]. The New Jersey shape contains a 55 degree lower slope similar to the GM shape, but the height of the lower slope was reduced from 330 mm (13 in.) to

254 (10 in.). Although the New Jersey barrier was originally designed matching the height of the GM shape at 813 mm (32 in.) tall, it was later extended to a height of 1,067 mm (42 in.), to accommodate larger vehicles, specifically tractor trailers.

The New Jersey barrier was designed for an impacting vehicle's tires to climb the barrier face during impact, similar to the GM shape. Allowing the vehicle tires to climb during impact reduces the damage to the sheet metal during low angle impacts. The lower step of the barrier also allows impact forces to act throughout the time the vehicle travels over the step and deeper into the barrier. This extended time results in lower peak impact forces and reduced accelerations for the passengers than the shorter interval associated with a flat wall.

However, tire climb on the barrier face creates negative effects as well. At high impact angles, tire climb can induce high vehicular roll angles. Further, the high vertical loads applied to a vehicle tire as it climbs the barrier can cause damage to the suspension and steering linkages. This type of damage has been shown to induce vehicle rollover after the vehicle leaves the barrier. The risk of serious injury or fatality is many times higher in rollover accidents than non-rollover accidents [6]. Therefore, vehicle climb and roll should be minimized.

The F-shape barrier was designed to reduce the amount of vehicle climb and roll through a parametric study of the basic New Jersey shape [7]. In this study, the impact performance of six new configurations (named A-F), were analyzed using computer simulations. The F-shape, as shown in Figure 1, was found to provide the lowest vehicle climb and roll, thus increasing vehicle stability. However, the maximum impact angle examined in the study was only 15 degrees. Even with these low angle impacts, a significant amount of climb and roll occurred. Also, the F-shape utilized the smallest lower step investigated in the study.

Constant slope barriers were developed to further increase vehicle stability by eliminating the lower slope of the New Jersey and F-shape barriers. Vehicle stability is greatly improved for constant slope barriers in comparison to the previous safety shapes, even for higher angle impacts of 20 to 25 degrees [8]. Barrier face slope remains the variable inside the group of constant slope barriers which has major effects on impact results.

The optimum barrier shape for vehicle stability is a vertical face. Impact forces act normal to the barrier face, so for a vertical wall, the forces are completely horizontal. The normal to any other slope will contain a vertical component, and thus create some amount of vehicle climb and roll. Figure 2 illustrates a vertical face barrier along with two popular single-slope barriers.

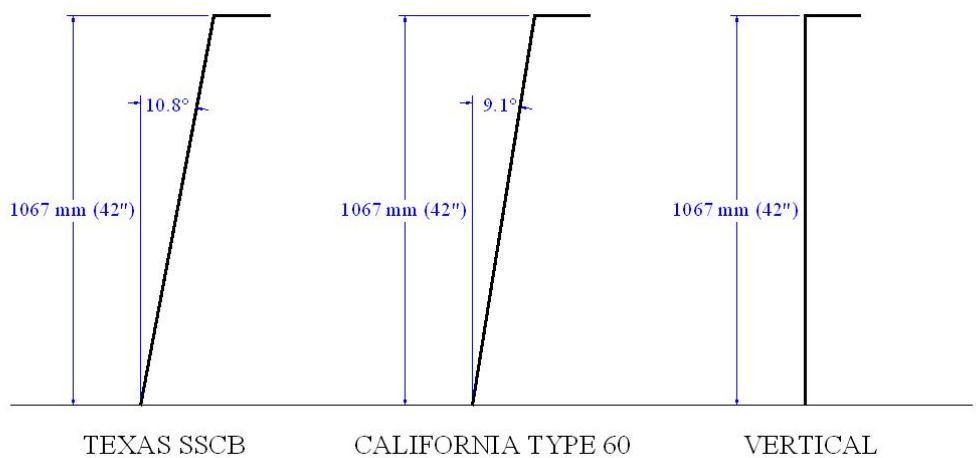

Figure 2. Constant Slope Barriers

Constant slope barriers do carry some negative effects due to the elimination of the shallow, lower slope associated with safety shape barriers. First, by limiting vehicular movement, the impact time duration is shorter causing higher peak impact forces. These higher peak impact forces transfer to the vehicle occupants and lead to an increased risk of injury.

Vertical faces allow the least amount of lateral vehicle movement, so the highest peak impact forces are associated with vertical faces. Second, vehicle damage is more probable since sheet metal will contact the barrier for all impact angles. Also, suspension damage remains a problem in passenger vehicle impacts [9].

Vertical face barriers can also create a problem with head slap. Head slap occurs when the lateral impact forces cause the passenger's head to be ejected through the side window of the vehicle and contact the barrier or attachments to the barrier. Head slap greatly increases the risk of serious injury and fatality during impacts. Head slap is not a problem with safety-shaped barriers because the vehicle climbs the barrier face and rolls away from the barrier. Vertical faces do not cause vehicles to roll away from the barrier, so head slap can become a problem when the barrier extends above the bottom of a vehicle's window.

Single-slope barriers have been designed in an attempt to balance the effects of increased peak impact forces and increased head slap issues with the reduction of vehicle climb and roll associated with vertical walls [10]. Single-slope barriers include the California Type 60 barrier and the Texas SSCB. These barriers incorporate angles of 9.1 and 10.8 degrees from vertical, respectively. A significant amount of wheel climb is still prevalent during impacts and may lead to vehicle instability problems, such as rollovers.

As described above, all of these standard barrier shapes have some negative aspects. Both safety-shaped barriers and single-sloped barriers induce vehicle climb that leads to rollover. Vertical shaped barriers prevent vehicle climb, but can cause head slap for barriers taller than the bottom of a vehicle's window. As a result, there is a need for an improved median barrier

system that provides a safe impact performance for passenger vehicles and contains tractor trailer vehicles.

1.2 Objectives

The objective of the research project was to design a new concrete median barrier to safely redirect vehicles ranging from small cars to fully loaded tractor trailers. The new barrier was intended to maximize stability in passenger vehicles by limiting wheel climb and roll, while addressing occupant safety by limiting peak impact forces, preventing head slap, and providing an economical alternative to existing concrete barrier designs.

2 LITERATURE REVIEW

2.1 Concrete Median Barrier Geometries

The first concrete barriers were developed at the General Motors circular track proving grounds and came to be known as GM shape barriers [3]. The majority of impacts on this circular track were low-angle impacts causing minor scrapes and gouges to the vehicles' sides. GM shape barriers were designed to minimize this damage by incorporating a shallow lower slope and a steeper upper slope. During low-angle impacts, the vehicle tires would climb the lower slope and be redirected without any sheet metal contact. The steeper upper slope of the barrier functioned to redirect vehicles impacting at higher angles.

The New Jersey Turnpike Authority later adapted the GM shape into a barrier known as the New Jersey shape barrier [4-5]. New Jersey shape barriers retained the two-slope face geometry, but the shallow lower slope was shorter than that of the original GM shape. Vehicles were still able to climb the barrier face during impacts, thereby absorbing kinetic energy and extending the impact time duration. Both of these factors helped to reduce impact forces and decelerations to the vehicle and its occupants. However, vehicle climb has been shown to be excessive during high-angle impacts, thus leading to vehicle instabilities and even rollovers.

Bronstad et al. [7] developed the F-shape barrier in the late 1970's through a parametric study to reduce the risk of vehicle rollover. Using computer simulations, six new barrier configurations were analyzed. The F-shape, which had the smallest lower slope of the six configurations, resulted in the least amount of roll and climb. Thus, the F-shape was recommended over the New Jersey shape due to an increase in vehicle stability during impacts. The GM shape, the New Jersey shape, and the F- shape are collectively referred to as safety

shape barriers. Although all three were originally 813 mm (32 in.) tall, both the New Jersey shape and the F-shape are commonly altered to a height of 1,067 mm (42 in.) for applications involving impacts with tractor trailer vehicles. The safety shape barriers were presented in Figure 1 of Chapter 1.

The single slope barrier was developed by Beason et al. [10] in 1991. The barrier stood 1,067 mm (42 in.) high and had a slope of 10.8 degrees along the barrier face. This geometry was designed to reduce the risk of rollover by eliminating the shallow lower slope of the safety shape barriers. A vertical face was recognized as being the optimum shape for limiting vehicle climb and roll, but concerns about an occupants head striking the barrier during impact, an event called head slap, lead to the barrier being given a slope. The sloped barrier face allows some climb and roll to move the occupant's head away from the barrier. Another advantage of the single slope barrier is that the adjacent roadway can be overlaid without adversely affecting barrier shape or performance.

2.2 Vehicle Rollovers

The risk of vehicle rollover must be reduced because rollover crashes tend to be much more severe and carry an increased fatality rate. As demonstrated by a National Highway Traffic Safety Administration report which analyzed the nation's crash data for 2004 [6], fatalities are many times more likely to occur in rollover crashes than in non-rollover crashes. In fact, approximately one third of passenger vehicle fatalities were linked to rollover crashes.

A study by Viner of the crashes in Illinois from 1985 to 1989 [11] found similar results showing rollover crashes to be more fatal. Viner further examined the problem and discovered

that the rate of rollover for impacts with guardrails was approximately 10 percent. Also, the rollover rate of concrete median barrier crashes was found to be over 5 percent.

In 1990, Mak et al. [8] used computer simulations to study the effects impact speed, impact angle, and barrier geometry have on vehicle rollover. Both higher speeds and higher impact angles led to a greater risk of rollover for all barrier shapes, especially for safety-shaped barriers. In fact, the F-shape provided little performance improvement over the New Jersey shape. A constant sloped barrier with a slope of 80 degrees or higher was found to reduce the risk of roll over, while also increasing lateral vehicle decelerations. A vertical wall was found to be the best choice for the prevention of vehicle rollover, but it had the greatest lateral decelerations as well.

2.3 Head Ejection

In 2004, Giavotto researched accident records containing occupant ejections [12]. Vehicle side windows were found to be the most prominent place of ejection, especially in crashes with safety barriers. Also, crashes involving this type of ejection were 11.7 times more likely to involve a fatality than barrier accidents without head ejection. Thus, it was recommended that measures be taken to prevent contact between the occupant's head and the barrier during crashes with safety barriers.

In 2005, the Midwest Roadside Safety Facility designed an open concrete rail which reduced the risk of head slap [13]. The upper front face of the barrier was setback, thus allowing an ejected head to extend out the vehicle side window without contacting any portion of the barrier. This barrier is shown in Figure 3.

Figure 3. Bridge Rail Designed with Cut-Out Section to Prevent Head Slap [13]

2.4 Design Loads / Barrier Strengths

National Cooperative Highway Research Program (NCHRP) Report 86 provided a system of equations for predicting the impact loads for different vehicle-barrier impacts [14]. These equations allowed for a quick and relatively accurate calculation of both the lateral and longitudinal impact forces using vehicle dimensions, vehicle mass, impact speed, impact angle, the coefficient of friction between the vehicle and the barrier, and the deflection of the barrier. Using this procedure becomes difficult to use when analyzing tractor trailer impacts because the vehicle is not a single body but instead articulated. Thus, calculating the impact forces to the tractor and the trailer components of the vehicle requires either a simplification of the vehicle or a more complex procedure.

In 1987, TTI conducted a study in which multiple vehicles were crashed into an instrumented vertical wall in order to measure the impact loadings [15]. Of specific interest to

this study, a 36,000 kg (79.400 lb) tractor trailer was crashed into the wall at 86 km/h (55 mph) and 15 degrees. The peak lateral load of the tractor trailer was 980 kN (220 kips).

In 1978, Hirsch [16] developed a method to calculate the structural capacity of a highway barrier utilizing yield line theory. This analysis predicts ultimate strength using the conservation of energy principle and an estimated failure shape. The internal energy absorbed is calculated as the sum of the bending moments multiplied by a displacement angle along each edge of the predicted failure shape, also called yield lines. The predicted failure shape is triangular, often referred to as a saw tooth shape. The external work, or energy applied to the barrier system, is equivalent to the impact load multiplied by a displacement. Thus, by using a barrier's resistance to both longitudinal bending and overturning, the ultimate strength, or impact load the barrier can withstand, can be calculated.

2.5 Evaluation of Highway Barriers

Since 1993, National Cooperative Highway Research Program (NCHRP) Report 350 [17] has provided the standard for evaluating roadside safety devices. NCHRP Report 350 not only guides crash testing procedures and impact conditions for barriers and crash cushions, but also describes the criteria in which each test is evaluated. The report divides barriers into six different test levels, TL-1 through TL-6, with the severity and impact loading increasing with each level. TL-5 is the test level corresponding to tractor-van trailers, and thus is of interest to this study. NCHRP Report 350 requires a longitudinal TL-5 barrier to be tested with a 36,000 kg (79,400 lb) tractor-van trailer impacting at 80 km/h (50 mph) and 15 degrees as well as an 820

kg (1,800 lb) small car and a 2,000 kg (4,400 lb) pickup truck impacting at 100 km/h (62 mph) at 20 and 25 degrees, respectively.

2.6 Existing TL-5 Concrete Median Barriers

The American Association of State Highway and Transportation Officials (AASHTO) Roadside Design Guide [18] has three concrete median barrier designs listed as TL-5 barriers. These barriers include a reinforced concrete New Jersey shape, a non-reinforced concrete New Jersey shape, and a reinforced concrete single slope barrier. All three of these barriers are 1,067 mm (42 in.) tall and are anchored using an asphalt keyway. The reinforced New Jersey shape barrier was successfully crash tested with a tractor trailer under TL-5 conditions by TTI in 1983 [19]. The non-reinforced New Jersey barrier, commonly referred to as the Ontario Tall Wall, was successfully tested by TTI in 1990 [20]. No record could be found containing a TL-5 crash test of the single slope barrier.

2.7 Previous Full Scale TL-5 Crash Tests

In addition to the previously mentioned TL-5 crash tests involving the instrumented wall and the concrete median barriers found in the Roadside Design Guide, multiple bridge rails have been successfully tested with tractor trailers under TL-5 conditions. These barriers include a 1,067 mm (42 in.) vertical bridge rail [21], a New Jersey shaped barrier with a metal rail attached to the top measuring 1,270 mm (50 in.) in height [22], an open concrete rail with a metal rail attached to the top measuring 1,372 mm (54 in.) in height [23], and a 1,067 mm (42 in.) tall open concrete rail [13]. Although these barriers are bridge rails and not median barriers, the

calculated structural capacities of each can be used to guide the required strength for the new barrier.

A smaller, 810 mm (32 in.) tall, reinforced concrete F-shape was tested with a tractor trailer near TL-5 conditions in the United Kingdom in the early 1980's [24]. During impact, the vehicle broke out a section of the barrier and rolled over the barrier. The vehicle ended up on its side behind the barrier. Thus, the test of this short, median barrier under TL-5 conditions was a failure.

In the early 1980's, the Texas Transportation Institute (TTI) conducted a study of heavy truck impacts on median barriers [2]. Since steel barriers systems typically deform during vehicular impacts and impart lower forces and decelerations to passenger vehicles, the research objective of this project was to develop a steel median barrier system that was capable of redirecting fully-loaded tractor-trailer vehicles. However, TTI later found that designing a steel barrier would be impractical because a barrier capable of redirecting a tractor trailer would behave as a rigid wall when impacted by smaller passenger vehicles. In addition, a rigid steel barrier would be much more expensive than a reinforced concrete barrier. Thus, TTI concluded that concrete barriers are the best choice for redirecting heavy tractor trailers.

One barrier system, the International Barriers Corporation's IBC Mark-7, was designed using steel panels and crash tested under TL-5 conditions in 1989 [25]. This barrier system was 1,168 mm (46 in.) tall and 1,118 mm (44 in.) wide. It utilized steel panels which lined both sides of a continuous chains of interlocked bins. These bins were filled with a dense aggregate and topped with a non structural lid. The barrier was non anchored to the ground. Instead, it was

designed to redirect vehicles by absorbing energy through the deformation of the steel panels and the displacement of the filler material.

The Pennsylvania Department of Transportation installed two test sections of the IBC Mark-7 barrier on their highways to compare the barrier's constructions processes, in service performance, initial costs, and maintenance costs to standard concrete barriers [26]. The state of Pennsylvania found the IBC Mark-7 did not perform as well as standard concrete median barriers and did not recommend the barrier for further use. The IBC Mark-7 was found to be more complicated and more expensive during construction than standard concrete barriers. Also, maintenance costs were higher for the barrier after impacts due to the replacement of sections and the deformation in the barrier. The weight of the barrier, two times that of equivalent concrete barriers, required special consideration if installed on bridges. Finally, the IBC Mark-7 required a wider median for installation due to its 508 mm (20 in.) greater barrier width and its 0.6 m (2 ft) of deflection during impacts not seen in the standard concrete barriers. Table 1 summarizes all of the previously mentioned TL-5 crash tests.

Table 1. List of Previous Full Scale TL-5 Crash Tests

Test	Ref No.	Tractor Trailer Weight		Impact Conditions			Barrier Description	Barrier Height		PASS or FAIL
				Speed		Angle (deg)				
		(kg)	(lbs)	(km/h)	(mph)			(mm)	(in.)	
4798-13	17	36,369	80,180	83.8	52.1	16.5	Reinforced New Jersey Barrier	1067	42	PASS
7162-1	18	36,287	80,000	79.8	49.6	15.1	Non-reinforced New Jersey Barrier	1067	42	PASS
D	19	39,210	86,450	83.4	51.8	15.0	F-shape Barrier	810	32	FAIL
405511-2	20	36,000	79,366	80.1	49.8	14.5	Vertical Bridge Rail	1067	42	PASS
2416-1	21	36,324	80,080	77.9	48.4	14.5	New Jersey Barrier with Metal Rail	1270	50	PASS
6	22	36,183	79,770	79.0	49.1	15.0	Open Concrete Rail with Metal Rail	1372	54	PASS
ACBR-1	13	35,822	78,975	79.5	49.4	16.3	Open Concrete Bridge Rail	1067	42	PASS
7046-3	23	36,324	80,080	88.5	55.0	15.3	Instrumented Vertical Wall	2286	90	-
7132-1	26	36,287	80,000	81.9	50.9	15.0	IBC Mark-7	1168.4	46	PASS

3 RESEARCH APPROACH

As presented in Chapter 1, concrete barriers incorporate a variety of shapes. Therefore, it was important to study how each shape affects vehicle stability and peak impact loads in order to identify the optimum barrier geometry. Previous full-scale crash test reports were obtained and information regarding vehicle climb, vehicle roll, and peak impact loads was gathered for each test. These values were then compared to evaluate the performance of different barrier shapes. Each crash test measurement was also compared with limits set by safety requirements to understand the importance of the observed variations. These comparisons provided a basis for selecting an optimum barrier shape.

Barrier geometry was also designed to reduce the risk of head slap. Full-scale crash test videos were utilized to measure the extent an occupant's head can be ejected out the vehicle's side window. Although the lateral ejection could be easily measured from the dummy in these videos, the vertical position of the head had to incorporate the vehicle height, vehicle movement, such as roll and/or climb during impact, as well as the position of the head relative to the vehicle. After accounting for all of these factors, the ejection measurements from many tests were compiled together, and a head ejection envelope was drawn encompassing all of the data points.

Since all of the crash test videos observed were of either small car or pickup truck impacts, the initial envelope had very distinct pockets for these two vehicle types. However, the middle of the envelope was under represented because mid-size vehicles, such as sedans and SUVs, were not included in the crash test videos. To fill this hole, the head ejection from mid-size vehicles was interpolated from the previous small car and pickup measurements using the occupant riding height as the determining factor. The head ejection envelope could then be

adjusted to encompass all vehicle types. The upper portion of the selected barrier shape was then adjusted so that it did not violate the head ejection envelope. The resulting barrier geometry optimizes vehicle stability and impact forces while also reducing the risk of head slap.

It was also deemed important to ensure the barrier could be constructed using common practices, such as slipforming. Hence, contractors from across the nation were surveyed regarding the most economical shape. The steel reinforcement was also optimized to give the barrier adequate strength at the lowest possible cost. Variations in the reinforcement configuration were explored by varying bar sizes, stirrup spacing, and number of longitudinal bars. Yield line theory was utilized to calculate the structural capacity, and contractor estimates for the cost of concrete and steel were used to calculate the cost for various reinforcement configurations. The top reinforcement designs could then be identified. The specific design would be left to the engineer and contractor to decide as the best fit for the individual project.

Finally, a full-scale crash test involving a tractor trailer impacting the selected barrier design was conducted to examine structural adequacy. The test was run under the TL-5 test parameters and passed all of the evaluation criteria of NCHRP Report 350 [17].

4 BARRIER SHAPE STUDY

4.1 Introduction

Five rigid barrier shapes were closely examined in order to establish a basis for geometry. These barrier shapes included the New Jersey shape, F-shape, single slope, vertical, and open concrete rail. Both positive and negative aspects exist in each of the barrier shapes. By comparing the positive and negative attributes of each barrier shape, an optimum base geometry was selected.

The evolution of concrete barrier shapes began on the General Motors circular test track. The majority of vehicle to barrier impacts around the track were low angle impacts causing damage, such as scrapes and gouges to the sides of vehicles. With the intent of minimizing this damage, the General Motors shape was developed with a shallow slope, 55 degrees, along its lower half, and a steeper slope, 80.4 degrees along the upper half. Also, a 51 mm (2 in.) vertical reveal was placed at the bottom of the barrier [3]. Vehicle tires were able to climb up the lower half of the barrier's shallow slope during impacts. Thus, vehicles were redirected back onto the track during low angle impacts without the vehicle sheet metal ever contacting the barrier, and damage to the vehicle was minimized. Figure 4 illustrates the GM shape concrete barrier.

New Jersey shape barriers were developed from the GM shape and maintained the two slope geometry. The slope on the lower portion remained at 55 degrees, while the upper slope was increased to 84 degrees. Also, the height of the lower slope was reduced by 76 mm (3 in.), but the total barrier height remained at 813 mm (32 in.) [4, 5]. Later, the upper slope was extended to a height of 1,067 mm (42 in.), thus creating a barrier to contain tractor trailers. After these adjustments, New Jersey shape barriers still allowed vehicle tires to ride up the lower

surface. As the vehicle rides up the barrier face, both the impact energy and impact forces are reduced. These results are not only lessening the amount of vehicle damage, but also lowering the likelihood of injury arising from occupant contact with the vehicle interior through a reduction in lateral decelerations.

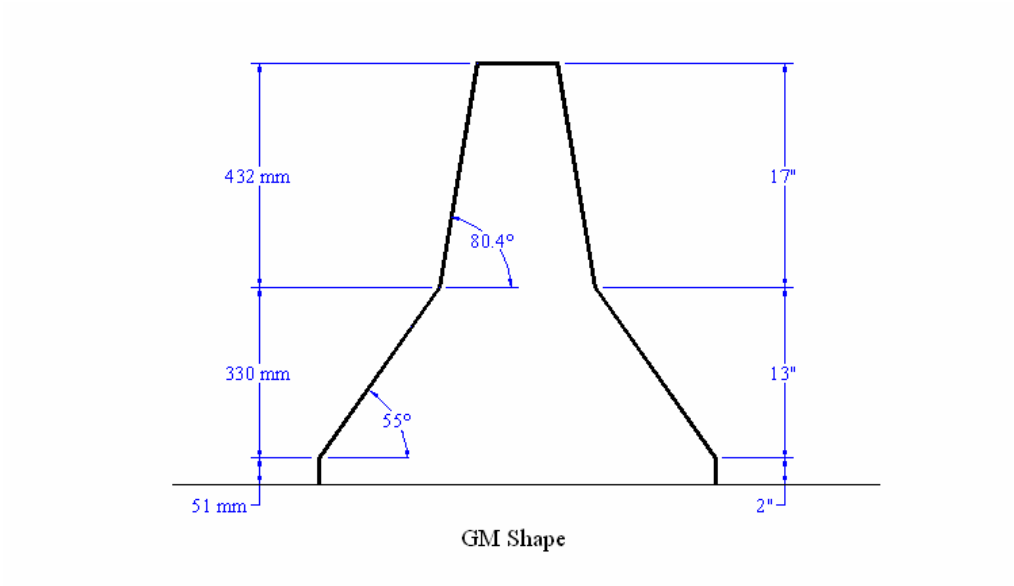

Figure 4. Geometry of the GM Shape Barrier

The total energy that must be dissipated during an impact event is the kinetic energy associated with the velocity normal to the barrier, often referred to as the impact severity. This energy is reduced by the New Jersey shape as a result of kinetic energy being converted into potential energy as the vehicle is raised up the face of the barrier. The gain in potential energy, or loss in kinetic energy, given to the vehicle is limited by the height that the vehicle can climb up the barrier. At low impact angles, this energy dissipation can be a significant portion of the total impact severity. However, for severe impacts at high speeds and high angles, the energy dissipated by vehicle climb is quite small compared to the total impact severity.

Lateral impact forces are reduced due to the extended time of an impact event with a New Jersey shape barrier compared to that of a flat rigid wall. As a vehicle climbs up the face of a New Jersey shape, a force is applied normal to the lower face of the barrier. The vertical component of this force lifts the vehicle, while the lateral component redirects the vehicle. Both the distance the vehicle travels laterally and the time of the impact event are therefore longer than if the impact occurred with a rigid planar wall. This longer impact time allows for lower peak forces with an associated reduction in peak acceleration applied to the vehicle.

Climbing the face of the barrier also has negative consequences in the loss of vehicular stability. As the impact side of a vehicle climbs the barrier, the vehicle can experience a great deal of roll and, often times, will cause a rollover. The risk of serious injury and fatality are greatly increased during rollover crashes [11]. Hence, barriers should be designed to minimize the risk of vehicle rollover.

The F- Shape was designed through a parametric study of the New Jersey shape with the intent of lessening the propensity for vehicle rollover [7]. The F-Shape incorporates two sloped face at angles of 55° and 84° as the New Jersey shape does. The difference is the location of the break point between slopes. The break point for the New Jersey shape is 330 mm (13 in.) above the bottom, while the F-shape break point is 254 mm (10 in.) above the bottom. Although this geometry change does improve vehicle stability, roll and climb remain major factors during an impact and the revised shape continues to cause rollovers. Both the New Jersey shape and F-shape shapes are routinely referred to as safety shapes and may be seen in Figure 5.

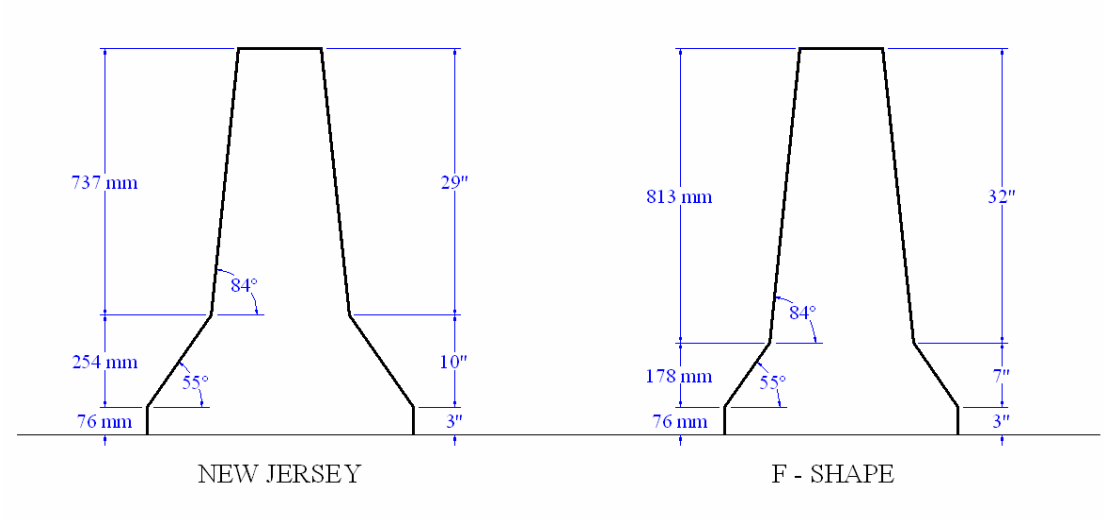

Figure 5. New Jersey Shape and F – Shape Barriers

Single-slope barriers have a constant flat face and eliminate the bottom reveal seen in safety shapes. Two different slopes have been used for single-slope barriers in the Texas SSCB barrier and California Type 60 barrier of 10.8 degrees and 9.1 degrees from vertical, respectively [27, 28]. Single-slope barriers were designed to have two advantages over the safety shape barriers. First, the constant barrier face eliminates problems with roadway overlays. Covering the bottom few inches of a single-slope barrier results in the same barrier face as before the overlay. Sufficient barrier height can be assured by constructing the barrier taller initially. This was not a possibility with safety-shape barriers. Second, the elimination of the lower, shallow sloped portion of a safety shape was intended to reduce the amount of vehicle climb and roll during impact. The vertical component of the impact force acting normal to the barrier face is much smaller for a steep, single-slope barrier than that of the lower curb of the safety shape. However, the single slope is much shallower than the upper slope on the safety shape.

Due to the reduction in vehicle movement throughout impact, single-slope barriers are expected to have shorter force impulses and, therefore, cause higher impact forces than safety shape barriers. Higher impact forces results in more damage to the vehicle as well as a greater likelihood of passenger injury. Also, as the peak forces are increased, so too is the vertical component of the impact force. Vehicle climb and roll are not eliminated, and a single-slope barrier can still lead to vehicle instabilities and rollovers.

The vertical shape barrier essentially eliminates vehicle climb and the roll associated with it. A vertical barrier face significantly eliminates any vertical component of the impact force that lifts the vehicle. While safety shape barriers, Texas SSCB barriers, and California Type 60 barriers have vertical force components of the resulting impact force normal to the barrier face equal to 57 percent, 19 percent , and 16 percent, respectively, the vertical shape barrier applies only a lateral impact force. However, impact forces associated with vertical face barriers are higher than the previously mentioned shapes due to the lack of upward vehicle movement during impact. The vertical shape barrier is expected to cause more vehicle damage and increase the possibility of passenger injury. Both the vertical shaped barrier and the California Type 60 single slope barrier are shown in Figure 6.

An open concrete rail consists of a continuous beam resting upon post segments, as seen in Figure 7. The opening between post segments creates an aesthetically pleasing view that is not exhibited by the previous shapes. Also, rain water can drain through and snow can be pushed through these openings and away from the roadway, a feature unique to an open concrete rail. However, the posts and openings must be designed carefully to prevent vehicle snag on a post that can further increase to the peak impact forces and the risk of occupant injury.

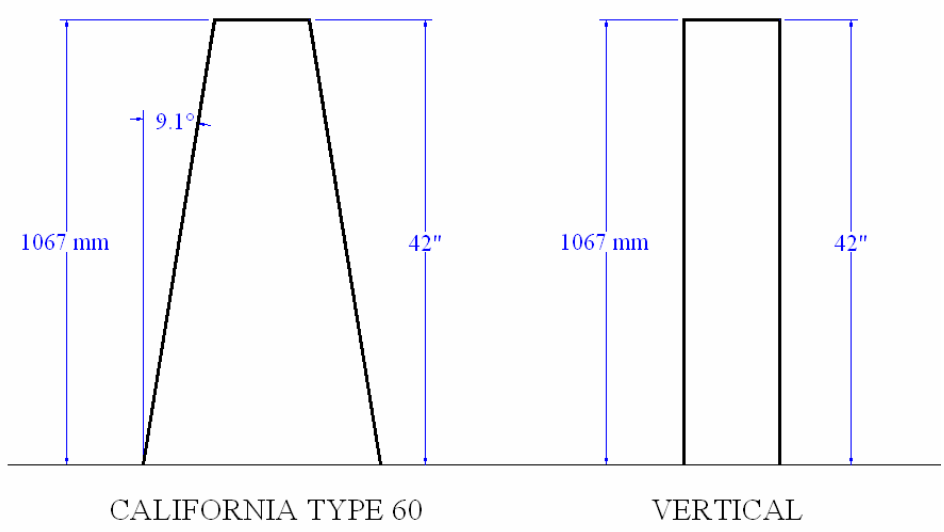

Figure 6. California Type 60 Single Slope and Vertical Shape Barriers

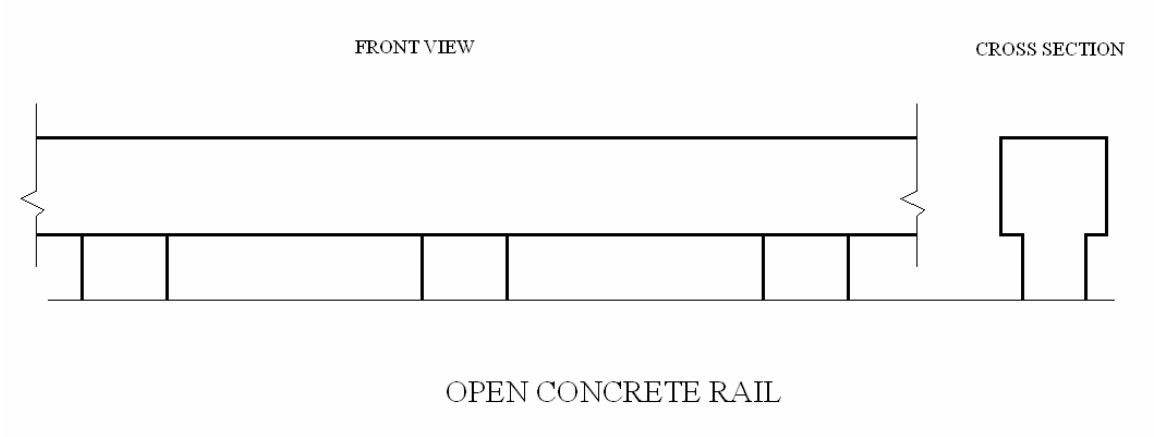

Figure 7. General Shape of an Open Concrete Rail

Open concrete rails have many of the same impact features as a vertical barrier since both have a vertical front face. Vehicle climb and the roll associated with it are virtually eliminated. Impact forces are expected to be higher than those of the safety shape and the single-slope barriers with the reduction in available lateral movement during impact.

4.2 Full-Scale Crash Test Data

The impact forces and vehicle stability during a crash vary with the geometric shape of the barrier, as discussed in Section 4.1. In order to compare the performances of each barrier shape, data from previous full-scale crash tests were examined. Specifically, values for occupant impact velocities (OIVs), occupant ridedown decelerations (ORDs), the maximum roll angle, and the magnitude of vehicle climb were obtained from each crash test. Values for OIV and ORD came directly from crash test reports. Maximum roll angle and climb height, on the other hand, often required more investigation.

Few crash test reports actually noted the maximum roll angle of the vehicle during impact. Many reports included a roll vs. time plot. In these cases, the maximum roll angle was obtained from the plot. In other circumstances, a report contained no information about vehicle roll during impact, but a video of the crash test was available. For these tests, the maximum roll angle was measured from the video utilizing either upstream or downstream viewpoints.

Only vehicle roll that began before the vehicle exited the barrier was considered for the maximum roll angle. Any unforeseen roll taking place after the vehicle exited the barrier was considered the result of vehicle damage. Specific barrier shapes can cause wheel or suspension damage that lead to a rollover. Therefore, rollovers occurring after the vehicle left the barrier as a result of wheel or suspension damage were also noted.

The maximum climb of a vehicle during impact was rarely documented in reports. Therefore, vehicle climb was defined as the vertical distance from the ground to the bottom of the tire marks on the barrier face. This distance was estimated from post impact photographs for

each of the full scale crash tests. A known distance obtained from the test report, usually the barrier height, was used to scale the measured distance of the tire marks.

Crash tests were sorted into groups classified by test vehicle and impact condition. Table 2 displays the criteria of each group. The first two groups mirror the small car and pickup tests, 5-10 and 5-11, respectively, of the crash test matrix prescribed by NCHRP Report 350 [17]. Pickup tests were run with a target impact speed of 100 km/h (62.1 mph) and an impact angle of 25 degrees. Small car tests were run targeting impact conditions of 96.6 – 100 km/h (60 – 62.1 mph) and 20 degrees. The range of impact velocity is the result of NCHRP Report 350 having a target velocity of 100 km/h (62.1 mph), while the previous crash testing guide, NCHRP Report 230, had a target impact velocity of 96.6 km/h (60 mph) [29]. Tests run under both guidelines were lumped together to form a single small car group since the vehicle weight and impact angles remained unchanged.

Table 2. Vehicle and Impact Condition for Each Crash Test Group

Group	Test Vehicle	Target Vehicle Weight		Imapct Conditions		
				Velocity		Angle
		(kg)	(lbs)	(km/h)	(mph)	(deg)
1	Small Car	820	1808	97-100	60-62	20
2	Pickup	2000	4409	100	62	25
3	Pickup	2450	5400	97	60	20
4	Sedan	2041	4500	97	60	25

A second pickup group was added due to the lack of an F-shape barrier being tested with a pickup under NCHRP Report 350 conditions. This second pickup group corresponds to AASHTO Performance Level 2 crash tests as defined in the Guide Specifications for Bridge

Railings [30]. AASHTO PL-2 tests have a similar impact speed, 96.6 km/h (60 mph), a slightly lower impact angle, 20 degrees, and a heavier pickup, 2,449.4 kg (5,400 lbs), compared to the NCHRP Report 350 pickup tests.

Finally, a group was created consisting of sedans. Although not currently a critical vehicle as described by NCHRP Report 350, sedans were used in the prior crash testing guideline, NCHRP Report 230. As a result, a large number of sedan tests have been conducted on shaped concrete barriers and, therefore, were included in the analysis. The sedan tests were run with target impact conditions matching the pickup test, 96.6 km/h (60 mph) and 25 degrees.

Inside of each impact condition group, the tests were further divided by barrier shape, as discussed in Section 4.1. The tables on pages 26 through 32 present the results of all individual full-scale crash tests grouped by impact condition and barrier shape. The average OIV, ORD, maximum roll angle, and maximum vehicle climb for each impact condition and barrier shape combination were calculated and are shown below each group and are highlighted in green.

A few OIV values were excluded from the average value calculations because the particular values were inconsistent with the rest of the group. As such, these values were classified as outliers. The OIV values for test no. 405511-1 are less than half of the values from any of the pickup tests run at 25 degrees, including the lower impact force barrier shapes. Also, they are nearly 1/4th of the remaining average OIV values of their group (pickup at 100 km/h (62.1 mph) and 25 degrees - vertical). Therefore, these OIV values were highlighted in red and were ignored from calculations.

Table 3. Small car tests impacting at 96.6-100 km/h (60-62.1 mph) and 20° (part 1)

TEST No.	REF. No.	BARRIER			VEHICLE			
		HEIGHT		SHAPE	TYPE	MAKE / MODEL	WEIGHT	
		(mm)	(in.)				(kg)	(lbs)
P76	31	813	32	New Jersey - raised step	small car	Leyland mini	760	1,675
R66	31	1499	59	New Jersey	small car	Leyland mini	760	1,675
R51	31	1499	59	New Jersey	small car	Leyland mini	760	1,675
R74	31	1422	56	Safety shape	small car	Leyland mini	760	1,675
7043-2	32	813	32	New Jersey	small car	85 Fiat Uno-45	781	1,722
N-1	33	851	33.5	New Jersey - 4.5" step	small car	82 Honda Civic	816	1,800
P111	31	813	32	New Jersey - raised step	small car	Leyland mini	760	1,675
NBR-1	34	686/914	27/36	New Jersey Combination Rail	small car	78 Honda	867	1,911
3115-3	35	813	32	New Jersey	small car	74 Honda	892	1,968
7043-12	32	813	32	New Jersey	small car	85 Chevrolet Sprint	769	1,695
MS30-2	36	762	30	New Jersey - 1" step	small car	84 Dodge Colt	798	1,759
7069-3	37	813	32	F - Shape	small car	80 Honda 1300 DX	892	1,966
584	38	1422	56	Single Slope - 9.1° textured	small car	92 Geo Metro	842	1,857
533	9	1422	56	Single Slope - 9.1°	small car	90 Toyota Tercel	845	1,863
531	9	1422	56	Single Slope - 10.8°	small car	90 Toyota Tercel	865	1,907
9429C-2	39	1067	42	Single Slope - 10.8°	small car	80 Honda Civic	816	1,800
581	38	1422	56	Single Slope - 9.1° textured	small car	91 Chevrolet Sprint	823	1,815
511	40	813	32	Single Slope - 9.1°	small car	92 Geo Metro	843	1,859
NCBR-1	34	457/762	18/30	Vertical Combination Rail	small car	79 Honda	902	1,990
7069-32	37	610/1067	24/42	Vertical Combination Rail	small car	83 Honda Civic	893	1,970
MN-4	41	508/914	20/ 36	Vertical Combo (1" protruding Curb)	small car	88 Ford Festiva	816	1,800
I2-1	42	813	32	Vertical	small car	84 Honda Civic	839	1,849
I2-3	42	813	32	Vertical	small car	84 Honda Civic	839	1,849
7069-5	37	813	32	Vertical	small car	81 Honda Civic	891	1,965
MKS-1	34	686	27	Open Concrete Rail	small car	79 Honda	839	1,850
OKBR-1	34	737	29	Open Concrete Rail	small car	79 Honda	898	1,980
1769-E-2-86	43	737	29	Open Concrete Rail	small car	80 Dodge Colt	913	2,014
KBR-1	34	686	27	Open Concrete Rail	small car	78 Honda	894	1,971
418048-4	44	686	27	Open Concrete Rail	small car	93 Ford Festiva	898	1,980
1769-E-3-86	43	737	29	Open Concrete Rail	small car	80 Dodge Colt	872	1,922
418048-5	44	686	27	Open Concrete Rail	small car	93 Ford Festiva	821	1,810
1952-4-90	45	940/1321	37/52	Open Conc. Combo w/ curb	small car	83 Honda Civic	888	1,958
1179-1	46	914/1372	36/54	Open Concrete Combination Rail	small car	79 Honda Civic	870	1,918
7199-1	47	686	27	Open Concrete Rail	small car	88 Yugo	816	1,800
1769-F-2-86	43	737	29	Open Concrete Rail	small car	80 VW Rabbit	894	1,971

Table 3. Small car tests impacting at 96.6-99.8 km/h (60-62 mph) and 20° (part 2)

TEST No.	VEHICLE IMPACT			OIV				ORD		CLIMB		MAX. ROLL ANGLE (deg.)	VEHICLE ROLLOVER
	VELOCITY		ANGLE	LONG.		LAT.		LONG.	LAT.				
	(km/h)	(mph)	(deg.)	(m/s)	(fps)	(m/s)	(fps)	(Gs)	(Gs)	(mm)	(in.)		
P76	85.0	52.8	20	-	-	-	-	-	-	812.8	32	45	NO
R66	90.0	55.9	23	-	-	-	-	-	-	762.0	30	25	NO
R51	95.0	59	20	-	-	-	-	-	-	762.0	30	29	YES
R74	95.0	59	20	-	-	-	-	-	-	508.0	20	10	NO
7043-2	96.4	59.9	21.9	6.4	18.4	8.7	25	1.6	7.5	508.0	20	10	NO
N-1	96.6	60	20.9	6.0	17.2	6.0	17.2	5	11	825.5	32.5	90	YES
P111	97.0	60.3	20	-	-	-	-	-	-	812.8	32	30	YES
NBR-1	97.7	60.7	19.3	2.5	7.2	7.6	21.8	0	8.3	-	-	11.5	NO
3115-3	98.7	61.3	20	-	-	-	-	-	-	635.0	25	12	NO
7043-12	99.1	61.6	20.1	4.3	12.4	7.3	21.1	0.8	9	457.2	18	18	NO
MS30-2	100.6	62.5	20	4.1	11.9	9.2	26.5	5.5	9	762.0	30	45	NO
Ave. - Small car & New Jersey				4.7	13.4	7.8	22.3	3.2	9.0	684.5	27.0	29.6	
7069-3	96.7	60.1	21.4	6.6	19	8.2	23.7	2.1	4.9	431.8	17	10	NO
Ave. - Small car & F-shape				6.6	19	8.2	23.7	2.1	4.9	0.0	0	10	
584	95.8	59.5	19.3	6.1	17.6	7.7	22	4.1	9.81	101.6	4	7	NO
533	92.9	57.7	19.5	5.4	15.5	9.0	25.9	2.1	16.7	254.0	10	4.6	NO
531	91.9	57.1	19.8	5.3	15.1	7.8	22.4	2.6	11.3	254.0	10	5.4	NO
9429C-2	97.7	60.7	19.9	5.5	15.7	9.6	27.7	2.3	9.2	-	-	6.3	NO
581	97.4	60.5	20.1	6.4	18.4	7.8	22.3	8	9.22	76.2	3	5	NO
511	104.1	64.7	20	5.2	14.8	8.2	23.7	2.9	16	-	-	12.7	NO
Ave. - Small car & Single Slope				5.6	16.2	8.4	24.0	3.7	12.0	171.5	6.8	6.8	
NCBR-1	96.1	59.7	18.8	4.9	14	7.9	22.7	N/A	N/A	-	-	5	NO
7069-32	97.0	60.3	19.8	5.0	14.5	8.6	24.6	1.2	12.7	0.0	0	8	NO
MN-4	98.2	61	20.6	5.7	16.5	9.7	27.8	2.6	10.6	0.0	0	4	NO
I2-1	91.4	56.8	20	6.2	17.9	5.2	14.8	11.9	27.5	0.0	0	9	NO
I2-3	100.6	62.5	20	7.3	20.9	N/A	N/A	5.9	N/A	0.0	0	11	NO
7069-5	97.4	60.5	21	7.0	20.1	9.0	26	1.6	9.4	0.0	0	1	NO
Ave. - Small car & Vertical				6.0	17.3	8.1	23.2	4.6	15.1	0.0	0.0	6.3	
MKS-1	95.0	59	18.9	4.9	14	6.3	18.2	1.4	14.8	-	-	-	NO
OKBR-1	94.5	58.7	18.9	8.6	24.6	6.9	19.9	1.4	12.1	-	-	-	NO
1769-E-2-86	97.2	60.4	19	-	-	-	-	4	11.1	-	-	-	NO
KBR-1	99.6	61.9	20.3	4.0	11.5	7.1	20.4	0.6	8.1	-	-	-	NO
418048-4	100.7	62.6	20.3	8.4	24	7.7	22	5.9	13.6	0.0	0	7	NO
1769-E-3-86	96.7	60.1	20.5	-	-	-	-	2.3	5.9	-	-	-	NO
418048-5	100.7	62.6	20.6	7.1	20.3	8.4	24	2.3	5.3	0.0	0	3	NO
1952-4-90	98.2	61	20	-	-	-	-	-	-	-	-	-	NO
1179-1	98.7	61.3	21	8.1	23.3	8.9	25.7	2	9.3	-	-	-	NO
7199-1	98.3	61.1	21.3	8.8	25.3	10.1	28.9	2.5	15.9	-	-	4	NO
1769-F-2-86	96.2	59.8	21	-	-	-	-	4.9	10.5	-	-	-	NO
Ave. - Small car & OCR				7.1	20.4	7.9	22.7	2.7	10.7	0.0	0.0	4.7	

Table 4. Pickup tests impacting at 100 km/h (62.1 mph) and 25° (part 1)

TEST No.	REF. No.	BARRIER			VEHICLE			
		HEIGHT		SHAPE	TYPE	MAKE / MODEL	WEIGHT	
		(mm)	(in.)				(kg)	(lbs)
421323-2	48	813	32	New Jersey	pickup	98 Chevrolet 2500	2,061	4,544
405491-1	49	813	32	New Jersey	pickup	91 Chevrolet 2500	2,077	4,580
408460-1	50	813/2438	32/96	New Jersey w/ Vertical Sound Wall	pickup	96 Chevrolet 2500	1,998	4,405
MNPD-1	51	813/1372	32/54	New Jersey Combination Rail	pickup	88 Ford F-250	1,996	4,402
587	36	1422	56	Single Slope - 9.1° textured	pickup	98 GMC Sierra 2500	2,027	4,470
589	38	1422	56	Single Slope - 9.1° textured	pickup	94 Chevrolet 2500	1,956	4,313
583	38	1422	56	Single Slope - 9.1° textured	pickup	90 GMC Sierra 2500	1,992	4,392
585	38	1422	56	Single Slope - 9.1° textured	pickup	90 Chevrolet 2500	1,958	4,317
588	38	1422	56	Single Slope - 9.1° textured	pickup	94 Chevrolet 2500	1,965	4,333
CYRO-2	52	813	32/ 231	Single Slope 10.8° w/ Sound Wall	pickup	98 GMC C2500 3/4 ton	2,013	4,439
515	40	813	32	Single Slope - 9.1°	pickup	91 Ford F-250	2,009	4,430
571	53	813	32	Single Slope - 9.1° (steel)	pickup	92 GMC 2500	2,196	4,842
512	40	813	32	Single Slope - 9.1°	pickup	91 Ford F-250	2,018	4,450
534	9	1422	56	Single Slope - 9.1°	pickup	91 Chevrolet pickup	2,000	4,410
7147-15	54	813	32	Single Slope 11°	pickup	85 Chevrolet Custom	2,074	4,573
562	55	914	36	Single Slope - 9.1°	pickup	90 Chevrolet 2500 PU	1,962	4,327
442882-1	56	1067	42	Vertical w/ Windows	pickup	97 Chevrolet Cheyenne 2500	2,042	4,502
405511-1	57	1067	42	Vertical	pickup	89 Chevrolet 2500	2,075	4,576
MN-3	41	508/914	20/ 36	Vertical Combo (1" protruding Curb)	pickup	87 Ford F-250	2,014	4,442
442882-2	56	1067	42	Vertical w/ Windows	pickup	98 Chevrolet 2500	2,049	4,518
418048-1	58	813	32	Open Concrete Rail	pickup	93 Chevrolet 2500	2,000	4,410
418048-6	44	686	27	Open Concrete Rail	pickup	93 Chevrolet 2500	2,000	4,410
7199-4	47	686	27	Open Concrete Rail	pickup	84 GMC Sierra 2500	2,041	4,500
545	59	813	32	Open Concrete Rail	pickup	94 Chevrolet 2500	1,945	4,290
441382-2	60	762	30	Open Concrete Rail	pickup	97 Chevrolet 2500	2,041	4,501
NIT-1	61	737	29	Open Concrete Rail	pickup	95 GMC 2500 3/4 ton	2,016	4,445

Table 4. Pickup tests impacting at 99.8 km/h (62 mph) and 25° (part 2)

TEST No.	VEHICLE IMPACT			OIV				ORD		CLIMB		MAX. ROLL ANGLE (deg.)	VEHICLE ROLLOVER
	VELOCITY		ANGLE	LONG.		LAT.		LONG.	LAT.				
	(km/h)	(mph)	(deg.)	(m/s)	(fps)	(m/s)	(fps)	(Gs)	(Gs)	(mm)	(in.)		
421323-2	98.3	61.1	26.4	6.8	19.4	10.4	29.9	10.2	5.5	355.6	14	18.6	NO
405491-1	101.2	62.9	25.6	6.8	19.4	4.6	13.1	4.5	19.6	812.8	32	34	NO
408460-1	101.5	63.1	25.5	7.6	21.7	9.5	27.2	6.5	7.6	304.8	12	16	NO
MNPD-1	105.3	65.4	25.5	7.5	21.6	8.9	25.7	5.1	7.6	812.8	32	7.2	NO
Ave. - Pickup & New Jersey				7.1	20.5	8.3	24.0	6.6	10.1	571.5	22.5	19.0	
587	101.1	62.8	23.6°	8.0	23	9.4	26.9	13.6	11.55	152.4	6	4	NO
589	100.7	62.6	23.6	7.9	22.7	8.5	24.3	12.84	9.65	152.4	6	5.3	NO
583	100.3	62.3	25	8.5	24.4	8.2	23.7	5.97	11.84	-	-	8	NO
585	99.3	61.7	24.3	7.8	22.4	8.6	24.8	12.26	12.35	101.6	4	3	NO
588	100.3	62.3	24	7.2	20.6	10.3	29.6	14.56	9.39	254.0	10	8	NO
CYRO-2	99.0	61.5	25	6.2	17.7	9.7	28	9.01	15.66	127.0	5	24.8	NO
515	110.4	68.6	24.2	6.2	17.9	7.0	20.2	8.2	14.1	-	-	26.7	NO
571	98.2	61	25	5.3	15.2	7.8	22.4	5.66	10.18	76.2	3	41	NO
512	97.0	60.3	25.1	6.9	19.9	9.4	26.9	6.9	6.7	-	-	40	YES
534	97.7	60.7	25.2	7.8	22.3	10.9	31.2	6.7	2.3	-	-	10.6	NO
7147-15	97.2	60.4	25.5	6.2	17.7	8.9	25.6	6.1	12.6	-	-	30	NO
562	99.8	62	25.8	5.7	16.4	7.6	21.7	17.3	19.1	381.0	15	30	NO
Ave. - Pickup & Single Slope				7.0	20.0	8.9	25.4	9.9	11.3	177.8	7.0	19.3	
442882-1	98.8	61.4	24.8	9.1	26.2	8.0	23	6	5.4	0.0	0	4.1	NO
405511-1	102.2	63.5	25.1	2.3	6.7	2.2	6.3	7.7	9.2	0.0	0	3	NO
MN-3	100.6	62.5	25.9	8.8	25.2	8.6	24.6	5.2	9.3	101.6	4	12	NO
442882-2	101.1	62.8	26.1	8.6	24.6	9.9	28.5	6.7	8	0.0	0	7.6	NO
Ave. - Pickup & Vertical				8.8	25.3	8.8	25.4	6.4	8.0	25.4	1.0	6.7	
418048-1	101.4	63	24.9	10.9	31.2	-	-	11.7	9.2	-	-	7	NO
418048-6	99.5	61.8	25.3	8.0	23	7.8	22.3	5.3	9.7	0.0	0	28	NO
7199-4	99.6	61.9	25.6	7.2	20.6	9.3	26.8	5.4	12.9	-	-	21	NO
545	100.7	62.6	25	6.6	18.9	8.0	22.9	3.51	8.6	-	-	12.8	NO
441382-2	100.7	62.6	25	7.4	21.3	8.3	23.9	4.6	7	0.0	0	14.4	NO
NIT-1	99.8	62	26.6	7.5	21.65	8.8	25.43	6.29	7.75	0.0	0	30	NO
Ave. - Pickup & OCR				7.9	22.8	8.4	24.3	6.1	9.2	0.0	0.0	18.9	

Table 5. Pickup tests impacting at 96.6 km/h (60 mph) and 20° (part 1)

TEST No.	REF. No.	BARRIER			VEHICLE			
		HEIGHT		SHAPE	TYPE	MAKE / MODEL	WEIGHT	
		(mm)	(in.)				(kg)	(lbs)
MS30-3	36	762	30	New Jersey	pickup	84 Chevrolet Silverado	2,476	5,460
7069-14	37	813	32	New Jersey	pickup	81 Chevrolet Custum Deluxe	2,596	5,724
7069-4	37	813	32	F - Shape	pickup	81 Chevrolet	2,621	5,780
7069-33	37	610/1067	24/42	Vertical Combination Rail	pickup	85 Chevrolet PU Custom Deluxe	2,526	5,570
7046-7	15	2286	90	Vertical (instrumented wall)	pickup	80 Chevrolet Suburban	2,449	5,400
7046-5	15	2286	90	Vertical (instrumented wall)	pickup	79 Chevrolet c-20	2,453	5,409
7069-6	37	813	32	Vertical	pickup	82 Chevrolet	2,612	5,759
I2-2	42	813	32	Vertical	pickup	83 Chevrolet Scottsdale	2,443	5,386
NEOCR-6	62	737	29	Open Concrete Rail	pickup	85 Dodge Ram 250	2,448	5,399
1952-5-90	45	940/1321	37/52	Open Conc. Combo w/ curb	pickup	84 GMC C1500	2,612	5,760
1952-7-90	45	940	37	Open Concrete Rail	pickup	82 Chevrolet C10	2,599	5,730
NEOCR-5	62	737	29	Open Concrete Rail	pickup	86 Ford F-250	2,446	5,394

Table 5. Pickup tests impacting at 96.6 km/h (60 mph) and 20° (part 2)

TEST No.	VEHICLE IMPACT			OIV				ORD		CLIMB		MAX. ROLL ANGLE (deg.)	VEHICLE ROLLOVER
	VELOCITY		ANGLE	LONG.		LAT.		LONG.	LAT.				
	(km/h)	(mph)	(deg.)	(m/s)	(fps)	(m/s)	(fps)	(Gs)	(Gs)	(mm)	(in.)		
MS30-3	102.2	63.5	20	5.8	16.6	4.9	14.2	6	6.6	381.0	15	5	NO
7069-14	92.9	57.7	20.6	6.2	17.8	6.5	18.7	5.1	9.2	177.8	7	7	NO
Ave. - Pickup & New Jersey				6.0	17.2	5.7	16.5	5.6	7.9	279.4	11.0	6.0	
7069-4	105.3	65.4	20.4	4.4	12.5	8.4	24.1	1.2	5.9	304.8	12	7	NO
Ave. - Pickup & F - Shape				4.4	12.5	8.4	24.1	1.2	5.9	0.0	0.0	7.0	
7069-33	89.0	55.3	19.6	4.0	11.6	7.0	20.1	2.2	8.1	25.4	1	3	NO
7046-7	103.2	64.1	19.7	5.5	15.7	6.8	19.5	2.4	9.7	-	-	4	NO
7046-5	105.9	65.8	19.9	3.9	11.3	9.2	26.4	1.2	7.4	-	-	10	NO
7069-6	96.1	59.7	20.2	6.5	18.6	7.3	21.1	5.5	8.6	25.4	1	7	NO
I2-2	100.3	62.3	20	5.0	14.4	9.7	27.9	10	8	152.4	6	5	NO
Ave. - Pickup & Vertical				5.0	14.3	8.0	23.0	4.3	8.4	67.7	2.7	5.8	
NEOCR-6	98.2	61	20	6.4	18.5	7.5	21.6	5.4	9.1	0.0	0	8	NO
1952-5-90	100.1	62.2	20	-	-	-	-	11	9	-	-	-	NO
1952-7-90	98.5	61.2	20	-	-	-	-	17	14	-	-	-	NO
NEOCR-5	96.2	59.8	21.7	6.2	17.7	2.2	6.4	9.8	9.8	0.0	0	8	NO
Ave. - Pickup & OCR				6.3	18.1	4.9	14.0	10.8	10.5	0.0	0.0	8.0	

Table 6. Sedan tests impacting at 96.6 km/h (60 mph) and 25° (part 1)

TEST No.	REF. No.	BARRIER			VEHICLE			
		HEIGHT		SHAPE	TYPE	MAKE / MODEL	WEIGHT	
		(mm)	(in.)				(kg)	(lbs)
CMB-2	63	813	32	New Jersey	sedan	64 Chevrolet	1,918	4,230
482	64	1321	52	New Jersey w/ Glare Screen	sedan	82 Mercury station wagon	1,977	4,360
262	65	813	32	New Jersey	sedan	70 Mercury	2,249	4,960
KCB-1	66	813	32	New Jersey - precast	sedan	79 Cadillac Feetwood	1,959	4,320
CMB - 15	67	813	32	New Jersey	sedan	73 Ambassador	2,041	4,500
Test-1	68	813	32	New Jersey - precast	sedan	66 Pontiac	2,041	4,500
321	69	813	32	New Jersey	sedan	73 Dodge Polara	2,131	4,700
NBR-2	34	686/914	27/36	New Jersey Combination Rail	sedan	78 Dodge	2,109	4,650
265	65	813	32	New Jersey	sedan	68 Dodge	2,168	4,780
CMB-1	63	813	32	New Jersey	sedan	63 Plymouth	1,814	4,000
162	70	813	32	New Jersey	sedan	65 Dodge	2,059	4,540
264	65	813	32	New Jersey	sedan	69 Dodge	2,204	4,860
235	71	686/991	27/ 39	New Jersey Combination Rail	sedan	66 Dodge	2,222	4,900
263	66	813	32	New Jersey	sedan	70 Mercury	2,249	4,960
301	72	813	32	New Jersey	sedan	69 Dodge Polara	2,204	4,860
CMB - 14	67	813	32	F - Shape	sedan	73 Ambassador	2,041	4,500
CMB - 20	67	813	32	F - Shape	sedan	74 Ambassador	2,041	4,500
9429C-3	39	1067	42	Single Slope - 10.8°	sedan	79 Cadillac Sedan deVille	2,041	4,500
7046-1	15	2286	90	Vertical (instrumented wall)	sedan	81 Buick Park Avenue	2,041	4,500
NCBR-2	34	457/762	18/30	Vertical Combination Rail	sedan	78 Plymouth	2,113	4,660
KBR-2	34	686	27	Open Concrete Rail	sedan	78 Dodge	2,113	4,660
MKS-2	34	686	27	Open Concrete Rail	sedan	80 Dodge	2,127	4,690
OKBR-2	34	737	29	Open Concrete Rail	sedan	82 Dodge	2,113	4,660
1179-2	46	914/1372	36/54	Open Concrete Combination Rail	sedan	79 Cadillac Copedeville	1,995	4,400
1769-E-1-86	43	737	29	Open Concrete Rail	sedan	78 Ford Thunderbird	2,114	4,662
1179-3	73	686	27	Open Concrete Rail	sedan	81 Oldsmobile 98	2,041	4,500
1769-F-1-86	43	737	29	Open Concrete Rail	sedan	79 Ford Thunderbird	2,117	4,669

Table 6. Sedan tests impacting at 96.6 km/h (60 mph) and 25° (part 2)

TEST No.	VEHICLE IMPACT			OIV				ORD		CLIMB		MAX. ROLL ANGLE (deg.)	VEHICLE ROLLOVER
	VELOCITY		ANGLE	LONG.		LAT.		LONG.	LAT.				
	(km/h)	(mph)	(deg.)	(m/s)	(fps)	(m/s)	(fps)	(Gs)	(Gs)	(mm)	(in.)		
CMB-2	89.6	55.7	25	-	-	-	-	-	-	-	-	-	NO
482	90.4	56.2	25	7.6	21.9	7.4	21.2	5.5	16.3	812.8	32	18	NO
262	95.0	59	25	-	-	-	-	-	-	812.8	32	90	YES
KCB-1	95.4	59.3	24.4	6.4	18.4	7.2	20.7	11.7	6.9	812.8	32	75	NO
CMB - 15	96.7	60.1	25.2	-	-	-	-	-	-	812.8	32	60	NO
Test-1	97.4	60.5	23.5	-	-	-	-	-	-	-	-	18	NO
321	98.2	61	26	-	-	-	-	-	-	812.8	32	48	NO
NBR-2	98.8	61.4	24.9	-	-	7.5	21.6	-	6.8	-	-	9.5	NO
265	99.8	62	24	-	-	-	-	-	-	1092.2	43	-	NO
CMB-1	100.4	62.4	25	-	-	-	-	-	-	-	-	-	NO
162	101.4	63	25	-	-	-	-	-	-	533.4	21	25	NO
264	103.0	64	25	-	-	-	-	-	-	914.4	36	-	NO
235	106.2	66	25	-	-	-	-	-	-	-	-	-	NO
263	106.2	66	25	-	-	-	-	-	-	787.4	31	90	YES
301	109.4	68	27	-	-	-	-	-	-	965.2	38	26.5	NO
Ave. - Sedan & New Jersey				7.0	20.2	7.4	21.2	8.6	10.0	835.7	32.9	46.0	
CMB - 14	95.9	59.6	24	-	-	-	-	-	-	812.8	32	48	NO
CMB - 20	101.4	63	24.8	-	-	-	-	-	-	812.8	32	56	NO
Ave. - Sedan & F-shape				-	-	-	-	-	-	812.8	32	52	
9429C-3	101.5	63.1	26.5	7.7	22.1	10.1	28.9	4.2	10.7	-	-	32.5	NO
Ave. - Sedan & Single Slope				7.7	22.1	10.1	28.9	4.2	10.7	0.0	0	32.5	
7046-1	99.5	61.8	25.6	6.8	19.4	9.8	28.2	5.4	14.4	-	-	6	NO
NCBR-2	96.6	60	25	5.8	16.6	10.9	31.2	1.8	10.14	-	-	4	NO
Ave. - Sedan & Vertical				6.3	18.0	10.3	29.7	3.6	12.3	-	-	5.0	
KBR-2	97.4	60.5	24	10.4	30	8.1	23.3	N/A	N/A	-	-	-	NO
MKS-2	95.3	59.2	24.9	4.8	13.9	8.7	24.9	1.7	13.9	-	-	-	NO
OKBR-2	95.1	59.1	25.4	9.2	26.4	9.4	26.9	5.3	8.9	-	-	-	NO
1179-2	95.6	59.4	25.9	8.3	23.9	9.5	27.3	4.9	16.7	0.0	0	-	NO
1769-E-1-86	94.1	58.5	25	-	-	-	-	3.4	11.1	0.0	0	-	NO
1179-3	95.3	59.2	26	10.2	29.4	8.2	23.6	5.8	5.9	0.0	0	8	NO
1769-F-1-86	92.7	57.6	26	-	-	-	-	2.8	14.3	0.0	0	-	NO
Ave. - Sedan & OCR				8.6	24.7	8.8	25.2	4.0	11.8	0.0	0.0	8.0	

4.3 Comparison of Barrier Shape Results

In order to quantify the differences in impact forces and vehicle stability between barrier shapes, the average impact statistics, obtained from Section 4.2, were calculated for each shape and impact condition combination. Average values were then expressed in terms of percent of average for the New Jersey shape barrier. Results of the barrier shape comparison are presented in Table 7. The New Jersey shape was chosen as the basis for comparison because it has been the most widely used concrete barrier shape across the United States for several decades.

In all four impact conditions, the two vertical face barriers, vertical shape and open concrete rail, produced the lowest maximum roll angles. When compared to the New Jersey shape, the maximum roll angle for vertical barriers was found to be 65 to 79 percent lower for small car and pickup tests under NCHRP Report 350 conditions. Also, the vertical shape reduced roll by 89 percent from the roll observed for New Jersey shape barriers during sedan impacts. The maximum roll angle is clearly minimized by a vertical face geometry.

The same outcome is observed in limiting the amount of vehicle climb. Vertical face geometries are found to allow the least amount of wheel climb in every impact condition. Looking specifically at the impact conditions related to NCHRP Report 350 tests, the vertical shape allowed only 4.4 percent of the climb observed during New Jersey shape impacts for pickup tests, and showed no climb at all in small car tests. The vertical shape has proven to be the best barrier for limiting both vehicular roll and wheel climb.

Table 7. Barrier Shape Comparisons by Impact Conditions

SMALL CAR @ 97-100 km/h & 20°

BARRIER TYPE	NUMBER OF TESTS	OCCUPANT IMPACT VELOCITY						OCCUPANT RIDEDOWN DECELERATION				MAXIMUM ROLL ANGLE (deg)	% of NJ	CLIMB (in.)
		LONG.		% of NJ	LAT.		% of NJ	LONG. (Gs)	% of NJ	LAT. (Gs)	% of NJ			
		(m/s)	(ft/s)		(m/s)	(ft/s)								
NEW JERSEY	11	4.1	13.4	100.0%	6.8	22.3	100.0%	3.2	100.0%	9.0	100.0%	29.6	100.0%	27.0
F - SHAPE	1	5.8	19.0	141.6%	7.2	23.7	106.2%	2.1	65.1%	4.9	54.7%	10.0	33.8%	17.0
SINGLE SLOPE	6	4.9	16.2	120.6%	7.3	24.0	107.5%	3.7	113.7%	12.0	134.4%	6.8	23.1%	6.8
VERTICAL	6	5.3	17.3	129.0%	7.1	23.2	103.9%	4.6	143.9%	15.1	168.0%	6.3	21.4%	0.0
OPEN CONCRETE RAIL	11	6.2	20.4	152.2%	6.9	22.7	101.8%	2.7	84.7%	10.7	119.0%	4.7	15.8%	0.0

SEDAN @ 97 km/h & 25°

BARRIER TYPE	NUMBER OF TESTS	OCCUPANT IMPACT VELOCITY						OCCUPANT RIDEDOWN DECELERATION				MAXIMUM ROLL ANGLE (deg)	% of NJ	CLIMB (in.)
		LONG.		% of NJ	LAT.		% of NJ	LONG. (Gs)	% of NJ	LAT. (Gs)	% of NJ			
		(m/s)	(ft/s)		(m/s)	(ft/s)								
NEW JERSEY	15	6.1	20.2	100.0%	6.5	21.2	100.0%	8.6	100.0%	10.0	100.0%	46.0	100.0%	32.9
F - SHAPE	2	-	-	-	-	-	-	-	-	-	-	52.0	113.0%	32.0
SINGLE SLOPE	1	6.7	22.1	109.7%	8.8	28.9	136.5%	4.2	48.8%	10.7	107.0%	32.5	70.7%	-
VERTICAL	2	5.5	18.0	89.3%	9.1	29.7	140.3%	3.6	41.9%	12.3	122.7%	5.0	10.9%	-
OPEN CONCRETE RAIL	7	7.5	24.7	122.7%	7.7	25.2	119.1%	4.0	46.3%	11.8	118.0%	8.0	17.4%	0.0

PICKUP @ 97 km/h & 20°

BARRIER TYPE	NUMBER OF TESTS	OCCUPANT IMPACT VELOCITY						OCCUPANT RIDEDOWN DECELERATION				MAXIMUM ROLL ANGLE (deg)	% of NJ	CLIMB (in.)
		LONG.		% of NJ	LAT.		% of NJ	LONG. (Gs)	% of NJ	LAT. (Gs)	% of NJ			
		(m/s)	(ft/s)		(m/s)	(ft/s)								
NEW JERSEY	2	5.2	17.2	100.0%	5.0	16.5	100.0%	5.6	100.0%	7.9	100.0%	6.0	100.0%	11.0
F - SHAPE	1	3.8	12.5	72.7%	7.3	24.1	146.5%	1.2	21.6%	5.9	74.7%	7.0	116.7%	12.0
SINGLE SLOPE	0	-	-	-	-	-	-	-	-	-	-	-	-	-
VERTICAL	5	4.4	14.3	83.3%	7.0	23.0	139.8%	4.3	76.8%	8.4	105.8%	5.8	96.7%	2.7
OPEN CONCRETE RAIL	4	5.5	18.1	105.2%	4.3	14.0	85.1%	10.8	194.6%	10.5	132.6%	8.0	133.3%	0.0

PICKUP @ 100 km/h & 25°

BARRIER TYPE	NUMBER OF TESTS	OCCUPANT IMPACT VELOCITY						OCCUPANT RIDEDOWN DECELERATION				MAXIMUM ROLL ANGLE (deg)	% of NJ	CLIMB (in.)
		LONG.		% of NJ	LAT.		% of NJ	LONG. (Gs)	% of NJ	LAT. (Gs)	% of NJ			
		(m/s)	(ft/s)		(m/s)	(ft/s)								
NEW JERSEY	4	6.3	20.5	100.0%	7.3	24.0	100.0%	6.6	100.0%	10.1	100.0%	19.0	100.0%	22.5
F - SHAPE	0	-	-	-	-	-	-	-	-	-	-	-	-	-
SINGLE SLOPE	12	6.1	20.0	97.5%	7.8	25.4	106.1%	9.9	151.0%	11.3	112.0%	19.3	101.8%	7.0
VERTICAL	4	7.7	25.3	123.4%	7.7	25.4	105.8%	6.4	97.3%	8.0	79.2%	6.7	35.2%	1.0
OPEN CONCRETE RAIL	6	6.9	22.8	111.0%	7.4	24.3	101.2%	6.1	93.3%	9.2	91.2%	18.9	99.6%	0.0

Note that open concrete rail does not have a barrier face near ground level in which to measure tire marks. Therefore, the climb is always estimated to be zero. Also, the face of open concrete rail is vertical. Therefore, it can be grouped in with the vertical shape as allowing the lowest amount of climb.

The safety-shape barriers have proven to be the best shapes for lowering occupant impact velocities and ridedown decelerations. With the exception of the pickup tests impacting at 25 degrees, the two lowest average lateral ORDs always belonged to New Jersey and F- shape barriers. Also, the safety-shaped barriers tended to exhibit lower average OIV values than the other shapes. Although safety shapes perform poorly for vehicle stability, safety shapes have been shown to produce the lowest impact forces.

As expected, the vertical shape tends to produce higher impact forces when compared to the New Jersey shape. The biggest increases were found in the OIV values. The vertical shape showed regular increases of up to 40 percent from the OIV values recorded from New Jersey shape tests. Increases were also observed for both lateral and longitudinal ORDs, 44 percent and 68 percent respectively, when the vertical shape was compared against New Jersey shape for small car impacts. Interestingly, the ORD values in both directions actually decrease slightly, between 3 percent and 20 percent, for pickup impacts. Nonetheless, vertical shaped barriers have routinely shown higher impact forces than the safety-shape barriers.

4.4 Comparison of Shape Results to NCHRP Report 350 Safety Criteria

There are no specific requirements for maximum roll angle or wheel climb in NCHRP Report 350. The only requirement found in the document relating to vehicle stability is that

passenger vehicles must not roll over during impact. Table 8 lists the six crash tests which resulted in rollovers.

Table 8. Crash Tests Resulting in Vehicle Rollover

Test	Ref. No.	Vehicle Class	Barrier Shape	Imapct Conditions		
				Velocity		Angle
				(km/h)	(mph)	(deg)
R51	31	Small Car	New Jersey	95.0	59	20
N-1	33	Small Car	New Jersey	96.6	60	20.9
P111	31	Small Car	New Jersey	97.0	60.3	20
512	40	Pickup	Single Slope	97.0	60.3	25.1
262	65	Sedan	New Jersey	95.0	59	25
263	65	Sedan	New Jersey	106.2	66	25

New Jersey shape barriers had the most occurrences of rollover. In fact, 27 percent of small car tests with New Jersey barrier resulted in rollover, and 13 percent of the sedan tests with New Jersey barrier experienced rollover. Combined with the pickup truck tests, the New Jersey shape barrier caused a rollover in 5 out of 32, or 16 percent of the tests studied. The single-slope barrier caused 1 rollover out of 19 tests, while both vertical barrier and open concrete rail caused no rollovers and passed every test in this criterion.

NCHRP Report 350 sets limits for occupant impact velocity in both the longitudinal and lateral directions at 12 m/sec (39.4 ft/sec) and occupant ridedown decelerations in both directions at 20 Gs when evaluating small car impacts. These safety limits were originally set by NCHRP Report 230, which classifies the resulting injury as severe, but not life threatening. Currently, there are no OIV and ORD limits for sedan impacts and only lateral OIV and ORD limits are prescribed for pickup truck impacts (the longitudinal limits are the same as small car limits).

The Update to NCHRP Report 350 will address this issue and apply the same safety limits to all passenger vehicles. Therefore, the existing small car OIV and ORD limits will be applied to the other vehicle classes in this study.

Referring back to the average OIVs and ORDs of Table 7 in Section 4.3, all of the barrier shapes are under the requirements for every vehicle class. In fact, not one of the individual full-scale crash tests comprising Table 3 through Table 6 in Section 4.2 reported an OIV above 12 m/s (39.4 ft/sec) and only one test recorded an ORD above 20 Gs. Test I2-1, a small car impacting a vertical shape barrier, recorded a lateral ORD of 27.5 Gs. However, the testing agency, Midwest Roadside Safety Facility, later concluded that this force spike occurred too late in the impact event (possibly a result of tail slap) to be harmful. The lateral ORD was ignored, and the test was passed as a result. Under the same judgment, every test has then passed the safety requirements set forth by NCHRP Report 350, and all of the barrier shapes were found to be satisfactory. As such, the benefit of one barrier shape over another through comparison of impact forces appears to be small.

4.5 Barrier Shape Recommendation

Section 4.3 demonstrated that as the barrier face becomes more vertical, the amount of vehicle roll and wheel climb during impact are greatly reduced and, therefore, the probability of a rollover is greatly reduced. Mak and Sicking [8] demonstrated through the use of accident data that both incapacitating injuries and fatalities are more than twice as likely during rollover crashes. Obviously, rollovers need to be avoided, and vertical-faced barriers are the best choice to do so.

Limiting vehicular movement does have the negative consequence of increasing the impact forces. However, as explained in Section 4.4, the increased occupant impact velocities and occupant ridedown decelerations are still under the safety requirements set by NCHRP Report 350. Those requirements were set to prevent life threatening injuries, so the increases in OIV and ORD are believed to be relatively minor. Therefore, a barrier with a vertical face was chosen as the optimum geometry for impacts between rigid parapets and passenger vehicles.

5 Head Ejection Study

5.1 Introduction

Often times, when a vehicle impacts a longitudinal barrier, the redirecting force can result in a passenger's head being ejected through the side window of the vehicle. When this occurs, the head is susceptible to striking any barrier component close to the vehicle. This event is called a head slap and can result in serious injury or death. Giavotto [12] found that accidents involving this type of ejection were 11.7 times more likely to involve a fatality than barrier accidents in general. Giavotto also found side windows to be the most prominent place of ejection, especially in crashes with safety barriers.

Head slap can be eliminated by ensuring that roadside structural components are not placed in the region where an occupant's head is likely to strike them. In order to avoid placing structural components in this critical region, it is necessary to identify the envelope or locations for possible head ejection. Unfortunately, no database on head ejection trajectories has been developed to date. Thus, it was necessary to collect the needed data from videos of full-scale crash tests.

Crash tests are normally recorded with high-speed cameras from multiple view points. Further, many crash tests involving passenger vehicles are run with a dummy in the front seat. For these tests, it is possible to estimate the displacement of the dummy's head outside the vehicle using high-speed test videos. An envelope containing displacements from multiple tests can then be created to represent the area where an occupant's head is likely to strike a roadside barrier or an associated barrier attachment, such as a sign, pole, post, or secondary railing.

Crash test videos used in this study were limited to only those consisting of passenger vehicles impacting rigid barriers. Rigid barriers, as compared to semi-rigid or flexible barriers, redirect errant vehicles more quickly and produce higher peak vehicle accelerations. These high accelerations tend to produce more severe head ejection, meaning greater displacement out of the side window. Head ejection resulting from more flexible barriers should be significantly less than the ejection distances experienced from rigid barriers.

NCHRP Report 350 and its predecessors require that when a dummy is used in a crash test, it should be a Hybrid III 50th percentile male dummy. As a result, all relevant crash tests have utilized the same size dummy. Also, only crash tests involving a restrained dummy with a seat belt were considered. Without the restraint of a seat belt, the dummy had nothing to prevent it from being completely ejected from the vehicle. It would be impractical to remove all roadside structures that could be struck by an occupant completely ejected from an automobile. Therefore, all of the crash tests used for evaluating head ejection incorporated belted dummies.

5.2 Video Analysis Procedure

All of the relevant and available full-scale crash tests showing head ejection were obtained in, or converted into, AVI format. As a result, the crash and the dummy's head movement were analyzed on a frame by frame basis using the Redlake Motionscope software. Three camera viewpoints were potentially used to measure the head ejection from the crash test videos. The upstream, the downstream, and the top views allow the maximum lateral head ejection to be easily observed and measured.

The first step in any vehicle analysis is the establishment of a scale between video pixel location and distance in the video. The scale factor was established by comparing a known distance found in the test report to the number of pixels between the two objects on the video. Test reports contain vehicle lengths, vehicle widths, vehicle heights, and barrier dimensions. Whenever possible, all of these were used to calibrate the scale. Thus, multiple distances were used and the conversion ratios were averaged together to get a single scale factor. The scales for x and y distances were assumed to be the same, and individual measurements confirmed this assumption during the scale factor calculation.

The bottom of the side window was used as the base point for all of the head motion measurements. This point was selected for two reasons. First, by basing the measurements from the bottom of the window, the individual vehicle heights were taken out of the analysis. Thus, the measured ejection could be applied to all vehicles, not just the specific test vehicle, by shifting the envelope up or down. Second, the maximum head ejection occurred approximately the time that the vehicle became parallel with the barrier. The side of the vehicle, including the bottom of the window, would then be in direct contact with the barrier. Any head displacements measured laterally out from the window would be susceptible to contact with either the barrier itself or any roadside device attached to the barrier.

When gathering displacement data, both the lateral and the vertical location of the head during the impact were necessary to define the head ejection envelope. The lateral displacement of the head out of the window paired with its vertical position established a point representing the extent of head ejection on a 2-D plane normal to the side of the vehicle. Since the time that the maximum head ejection occurred very near the time when the vehicle became parallel to the

barrier, this 2-D plane was also normal to the face of the barrier. A head ejection envelope was formed on this plane by encompassing all of the points accumulated from different views and different tests. The envelope would be used to dictate the area from which roadside structures, or barrier components, must be excluded in order to prevent head slap. An example of how the lateral and vertical measurements were taken is shown in Figure 8.

Figure 8. Lateral and Vertical Measurements from the Bottom of the Window

The head ejection envelope must be defined by both the maximum lateral head displacement and lowest vertical head displacement. These two extremes were closely observed while tracking the path of the head as it was ejected out of the window. During impact, a

dummy's shoulder was normally pressed against the door and could not move. In this case, head ejection was caused by the rotation in the neck and slight shifting of the body. The body motion was restricted by the safety belts, and head displacement was the result of neck and torso bending. The rotating was further limited by the physical limits of the dummy's neck structure and contact with the bottom of the window. These limitations prevented the head from rotating past horizontal in any of the crash test videos studied. Thus, the maximum lateral and minimum vertical positions occurred simultaneously, and the critical time in each test was reached in only one frame. The dummy's head motion was tracked until its direction of motion reversed. All head ejection measurements were taken on the frame immediately prior to this reversal.

For the upstream and downstream views, the lateral and vertical distances from bottom of the window were measured to three points to define the contour of the head. The three points on the head are the minimum vertical point, the maximum lateral point, and a point between the other two in order to better define the contour of the head. These points are labeled (1), (2), and (3), as shown in Figure 9. Each head ejection measurement was repeated 10 times for every applicable view of the crash test. Thus, each upstream and downstream view results in 30 independent points describing the extreme location of a passengers head. For the top view, only the maximum lateral displacement to a single point was measured since no vertical displacements could be measured.

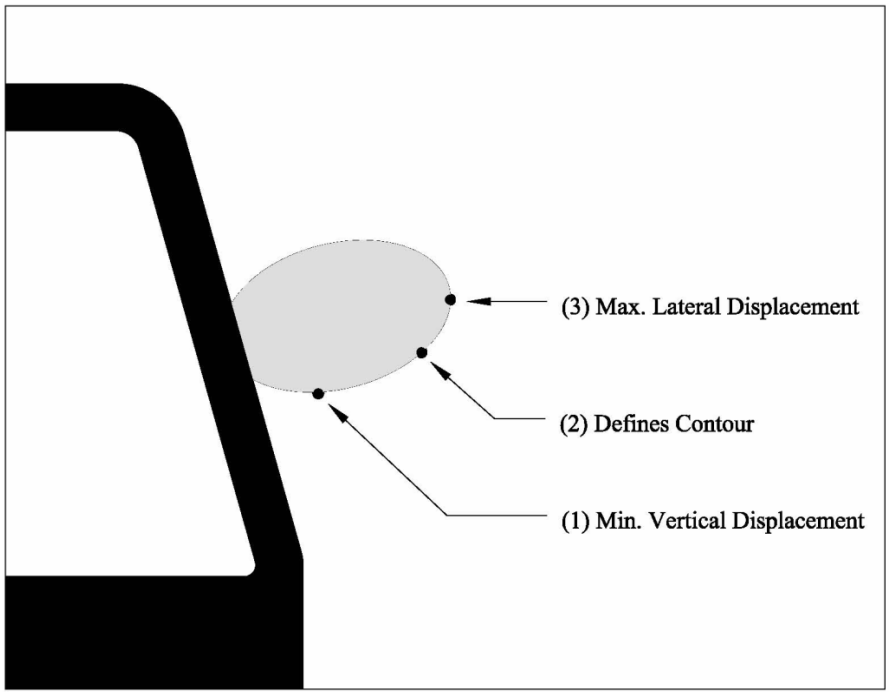

Figure 9. Location and label of three points measured.

The vertical measurement needed to complete the 2-D point for the top view was interpolated from the other views. The average of the vertical measurements taken for the point of maximum lateral displacement, point (3), in the upstream and downstream views, was used as the vertical displacement for all 10 of the measurements taken from the top view. This interpolation resulted in 10 data points describing only the maximum lateral head displacement for the top view.

The head ejection measurements were separated into categories - small cars and pickups. Different head displacements were expected for these vehicles due to the difference in how a passenger sits in a pickup as compared to a small car. A pickup passenger usually sits more upright and higher relative to the window than small car occupants. If a pickup occupant's

shoulder doesn't contact the door, the head and neck can move closer to the window before neck rotation even begins. As a result, pickups tend to experience larger lateral ejection measurements than small cars.

Small cars and pickups also have much different window heights. Remember, all ejection measurements were based from the bottom of the window. Therefore, all small cars measurements were grouped together with a common origin, while the pickup measurements were given a separate common origin. Thus, ejection envelopes were constructed for each vehicle type. These envelope pieces had to be placed at the correct vertical locations according to vehicle window heights to define the complete ejection envelope. This process is explained in Section 5.5.

5.3 Head Ejection Measurements from Small Cars

Eight full-scale crash tests were used to measure the head ejection out of a small car. All eight crash tests involved rigid longitudinal barriers in compliance with NCHRP Report 350 test conditions. The high-speed videos for each test clearly showed the contour of the dummy's head as it traveled outside of the vehicle and, with only one exception, multiple camera views could be utilized. Table 9 contains a list of these tests along with impact conditions and the views used to measure head displacements. Note that head ejection was also observed in many other small car crash tests. However, these crash tests were excluded from the study due to either an obstruction to the view of the head motion or the extent of ejection was not large enough to affect the bounds of the head ejection envelope.

Table 9. List of Small Car Tests Used to Describe Head Ejection

Test	Ref. No.	Vehicle	Barrier	Impact Condition			Applicable Views		
				Velocity		Angle (deg)	Top	DS	US
				(km/h)	(mph)				
418048-4	44	93 Festiva	Open Concrete Rail	100.6	62.5	20.3	X	X	
418048-5	44	93 Festiva	Open Concrete Rail	100.1	62.2	20.6	X	X	
I2-3	42	84 Civic	Vertical Wall	91.4	56.8	20			X
533	9	90 Tercel	Single Slope Barrier	92.9	57.7	19.5		X	X
404311-1	74	93 Geo Metro	Vertical Steel Bridge Rail	99.9	62.1	20.8	X	X	
511	40	92 Geo Metro	Single Slope Barrier	104.1	64.7	20	X	X	X
544	59	94 Geo Metro	Open Concrete Rail	111.0	69	20	X	X	X
531	9	90 Tercel	Single Slope Barrier	91.9	57.1	19.8	X		X

All of tests shown in Table 9 were analyzed as described in Section 5.2. The following pages contain the data measured for each individual test in both tabular and graphical formats. Note that ejection data could not be collected for all views.

TEST 418048-4

Table 10. Data Measurements for Test 418048-4

DOWNSTREAM VIEW						UPSTREAM VIEW						TOP VIEW	
Point 1		Point 2		Point 3		Point 1		Point 2		Point 3		Point 3	
Lateral (mm)	Vertical (mm)	Lateral (mm)	Vertical (mm)	Lateral (mm)	Vertical (mm)	Lateral (mm)	Vertical (mm)	Lateral (mm)	Vertical (mm)	Lateral (mm)	Vertical (mm)	Lateral (mm)	Vertical (mm)
0.0	21.4	92.8	64.2	121.3	135.6							131.6	129.2
0.0	14.3	99.9	57.1	114.2	135.6							131.6	129.2
0.0	14.3	99.9	71.4	121.3	121.3							131.6	129.2
0.0	7.1	99.9	71.4	121.3	128.4							131.6	129.2
0.0	7.1	85.6	50.0	107.0	128.4							109.7	129.2
0.0	14.3	92.8	42.8	128.4	121.3							109.7	129.2
0.0	28.5	64.2	64.2	107.0	149.9							109.7	129.2
0.0	14.3	85.6	42.8	107.0	121.3							131.6	129.2
0.0	21.4	57.1	71.4	99.9	121.3							131.6	129.2
0.0	28.5	57.1	64.2	99.9	128.4							131.6	129.2

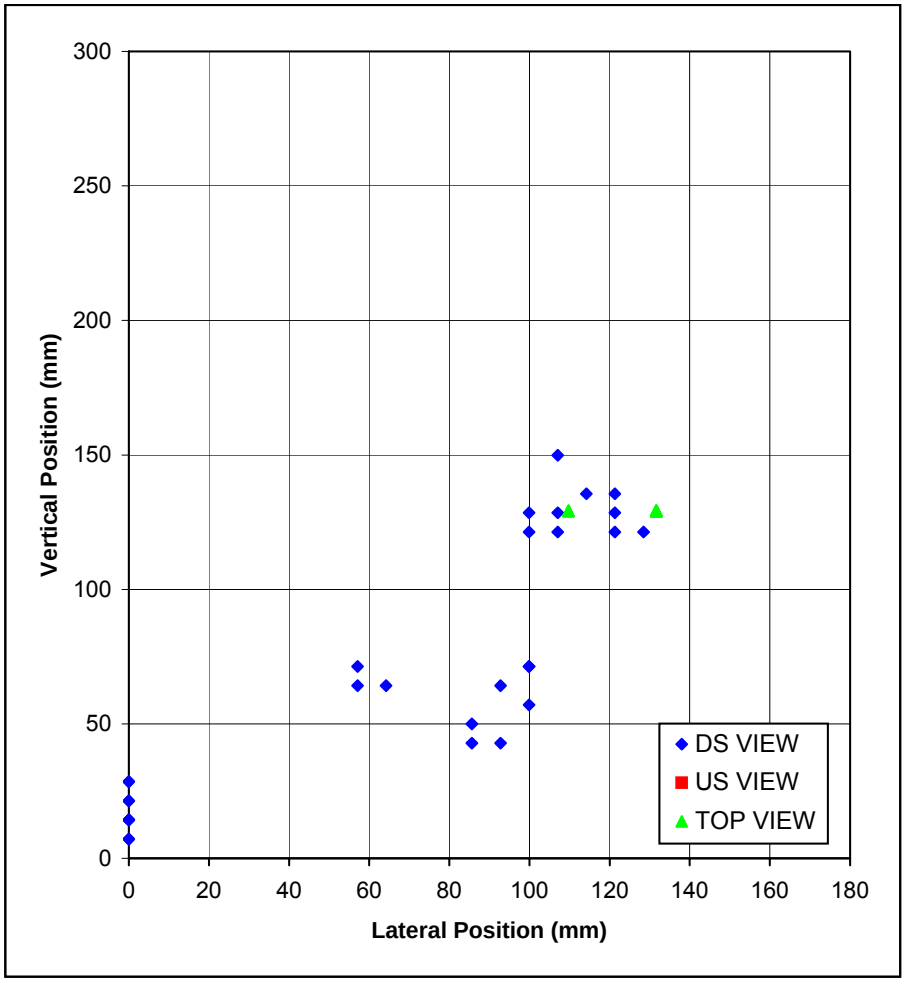

Figure 10. Plot of Data Measurements for Test 418048-4

TEST 418048-5

Table 11. Data Measurements for Test 418048-5

DOWNSTREAM VIEW						UPSTREAM VIEW						TOP VIEW	
Point 1		Point 2		Point 3		Point 1		Point 2		Point 3		Point 3	
Lateral (mm)	Vertical (mm)	Lateral (mm)	Vertical (mm)	Lateral (mm)	Vertical (mm)	Lateral (mm)	Vertical (mm)	Lateral (mm)	Vertical (mm)	Lateral (mm)	Vertical (mm)	Lateral (mm)	Vertical (mm)
0.0	24.3	115.6	54.7	139.9	97.3							127.7	98.5
0.0	24.3	109.5	48.7	133.8	103.4							127.7	98.5
0.0	24.3	103.4	48.7	127.7	91.2							127.7	98.5
0.0	24.3	103.4	42.6	127.7	97.3							149.0	98.5
0.0	30.4	85.1	42.6	115.6	109.5							149.0	98.5
0.0	24.3	91.2	54.7	115.6	97.3							127.7	98.5
0.0	30.4	79.1	42.6	127.7	97.3							127.7	98.5
0.0	18.2	97.3	54.7	133.8	103.4							149.0	98.5
0.0	24.3	85.1	54.7	133.8	91.2							149.0	98.5
0.0	30.4	109.5	54.7	121.6	97.3							149.0	98.5

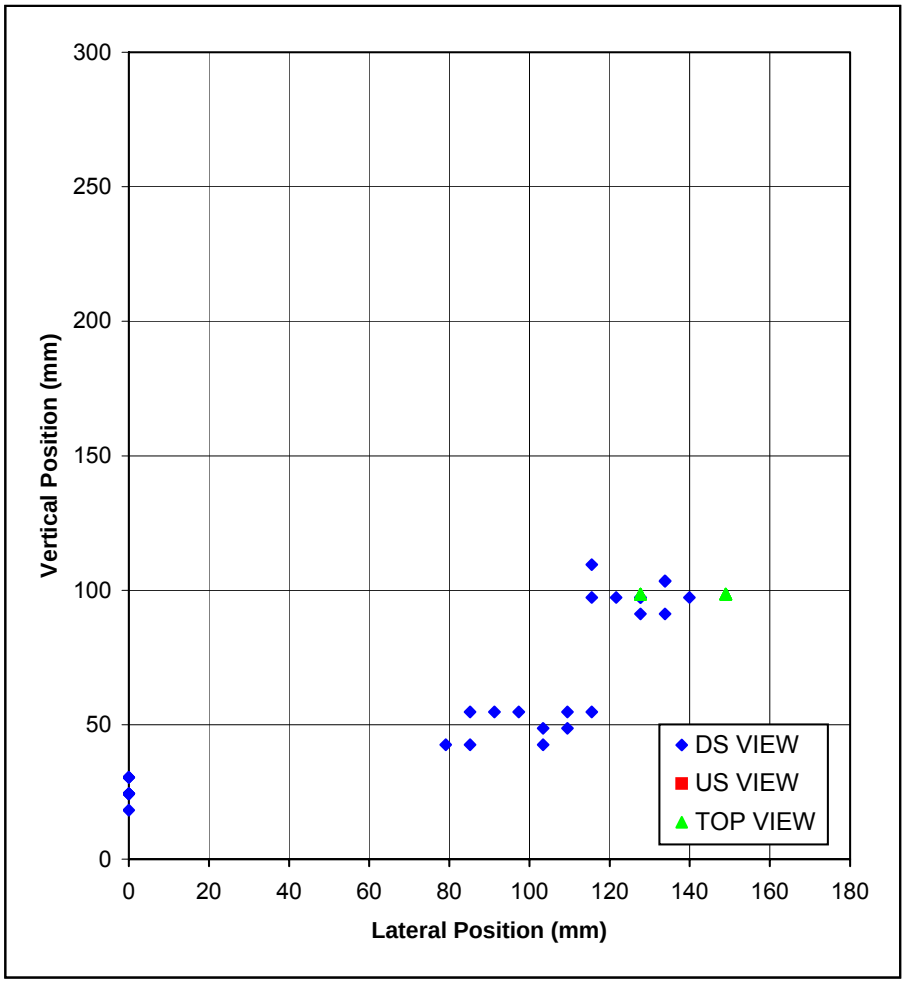

Figure 11. Plot of Data Measurements for Test 418048-5

TEST I2-3

Table 12. Data Measurements for Test I2-3

DOWNSTREAM VIEW						UPSTREAM VIEW						TOP VIEW	
Point 1		Point 2		Point 3		Point 1		Point 2		Point 3		Point 3	
Lateral (mm)	Vertical (mm)	Lateral (mm)	Vertical (mm)	Lateral (mm)	Vertical (mm)	Lateral (mm)	Vertical (mm)	Lateral (mm)	Vertical (mm)	Lateral (mm)	Vertical (mm)	Lateral (mm)	Vertical (mm)
						0.0	188.3	80.7	228.7	121.1	269.1		
						0.0	174.9	80.7	215.2	134.5	255.6		
						0.0	148.0	80.7	174.9	121.1	255.6		
						0.0	148.0	80.7	188.3	107.6	255.6		
						0.0	148.0	80.7	188.3	134.5	228.7		
						0.0	161.4	80.7	174.9	148.0	228.7		
						0.0	174.9	107.6	215.2	148.0	269.1		
						0.0	161.4	121.1	201.8	134.5	282.5		
						0.0	174.9	107.6	201.8	134.5	269.1		
						0.0	161.4	107.6	201.8	134.5	242.2		

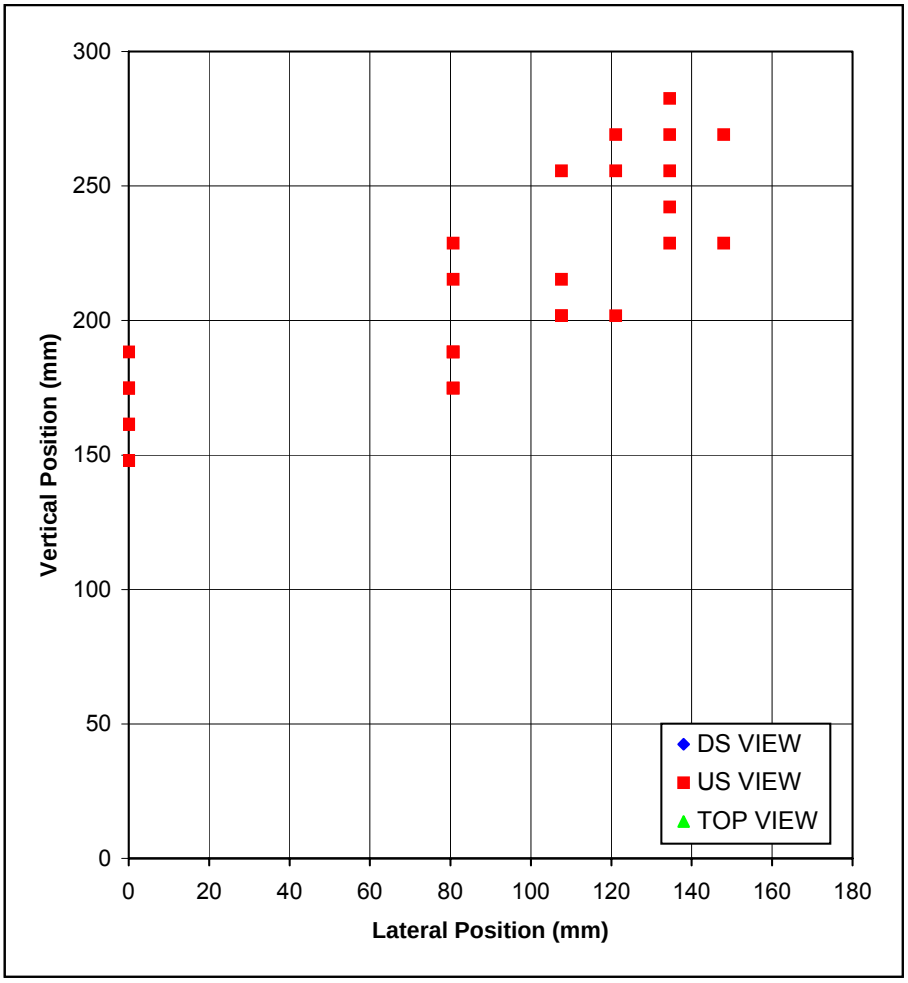

Figure 12. Plot of Data Measurements for Test I2-3

TEST 533

Table 13. Data Measurements for Test 533

DOWNSTREAM VIEW						UPSTREAM VIEW						TOP VIEW	
Point 1		Point 2		Point 3		Point 1		Point 2		Point 3		Point 3	
Lateral (mm)	Vertical (mm)	Lateral (mm)	Vertical (mm)	Lateral (mm)	Vertical (mm)	Lateral (mm)	Vertical (mm)	Lateral (mm)	Vertical (mm)	Lateral (mm)	Vertical (mm)	Lateral (mm)	Vertical (mm)
0.0	63.9	47.9	79.9	79.9	127.8	0.0	94.9	63.3	158.1	110.7	189.8		
0.0	63.9	47.9	79.9	79.9	111.8	0.0	110.7	63.3	142.3	110.7	189.8		
0.0	79.9	47.9	95.8	79.9	143.7	0.0	94.9	47.4	126.5	94.9	174.0		
0.0	63.9	47.9	111.8	63.9	143.7	0.0	79.1	63.3	142.3	94.9	174.0		
0.0	31.9	31.9	79.9	63.9	127.8	0.0	94.9	47.4	126.5	94.9	189.8		
0.0	47.9	47.9	63.9	79.9	111.8	0.0	94.9	47.4	126.5	79.1	174.0		
0.0	31.9	47.9	63.9	95.8	111.8	0.0	79.1	31.6	110.7	63.3	189.8		
0.0	47.9	47.9	47.9	95.8	95.8	0.0	79.1	47.4	126.5	79.1	174.0		
0.0	31.9	31.9	79.9	79.9	111.8	0.0	94.9	47.4	110.7	94.9	158.1		
0.0	47.9	47.9	79.9	63.9	111.8	0.0	79.1	63.3	110.7	94.9	174.0		

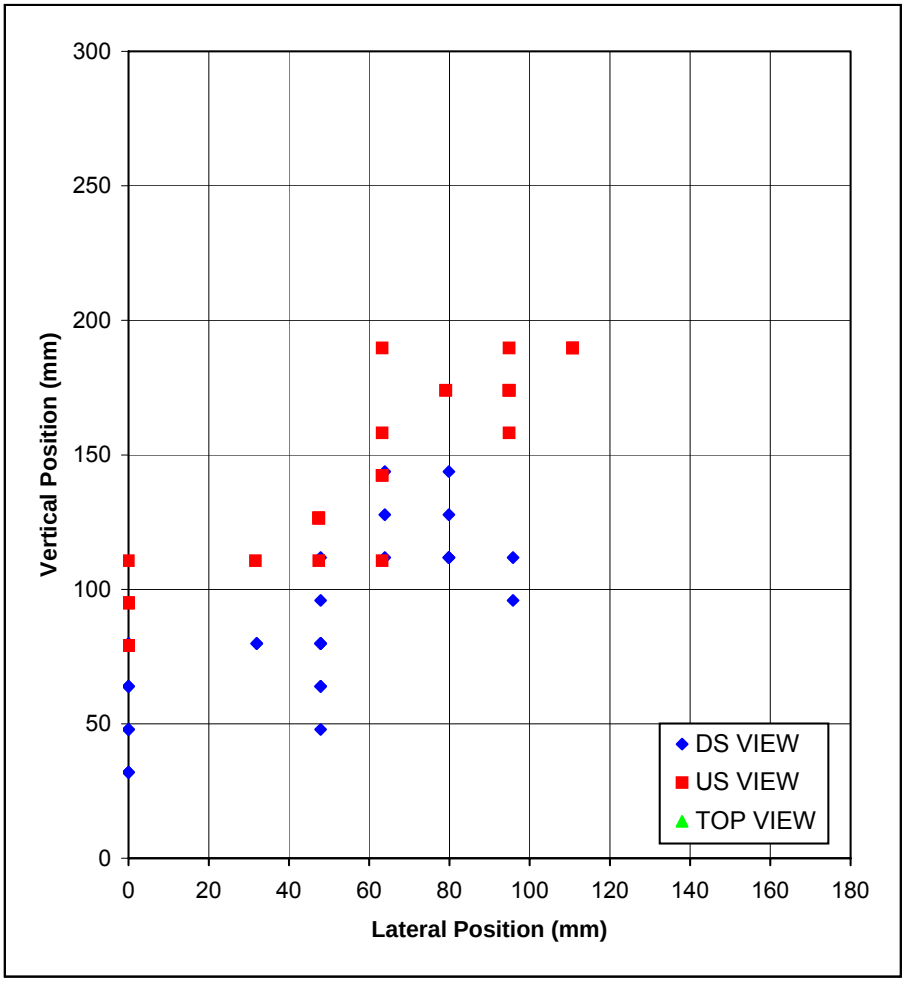

Figure 13. Plot of Data Measurements for Test 533

TEST 404311-1

Table 14. Data Measurements for Test 404311-1

DOWNSTREAM VIEW						UPSTREAM VIEW						TOP VIEW	
Point 1		Point 2		Point 3		Point 1		Point 2		Point 3		Point 3	
Lateral (mm)	Vertical (mm)	Lateral (mm)	Vertical (mm)	Lateral (mm)	Vertical (mm)	Lateral (mm)	Vertical (mm)	Lateral (mm)	Vertical (mm)	Lateral (mm)	Vertical (mm)	Lateral (mm)	Vertical (mm)
0.0	127.1	34.7	167.5	57.8	196.4							86.8	201.0
0.0	127.1	34.7	161.7	57.8	190.6							65.1	201.0
0.0	132.8	40.4	161.7	63.5	202.2							65.1	201.0
0.0	127.1	40.4	161.7	63.5	207.9							86.8	201.0
0.0	132.8	34.7	156.0	52.0	202.2							108.5	201.0
0.0	121.3	34.7	156.0	52.0	213.7							86.8	201.0
0.0	115.5	46.2	144.4	63.5	190.6							86.8	201.0
0.0	109.7	40.4	150.2	57.8	202.2							65.1	201.0
0.0	115.5	40.4	161.7	52.0	207.9							86.8	201.0
0.0	121.3	34.7	150.2	52.0	196.4							108.5	201.0

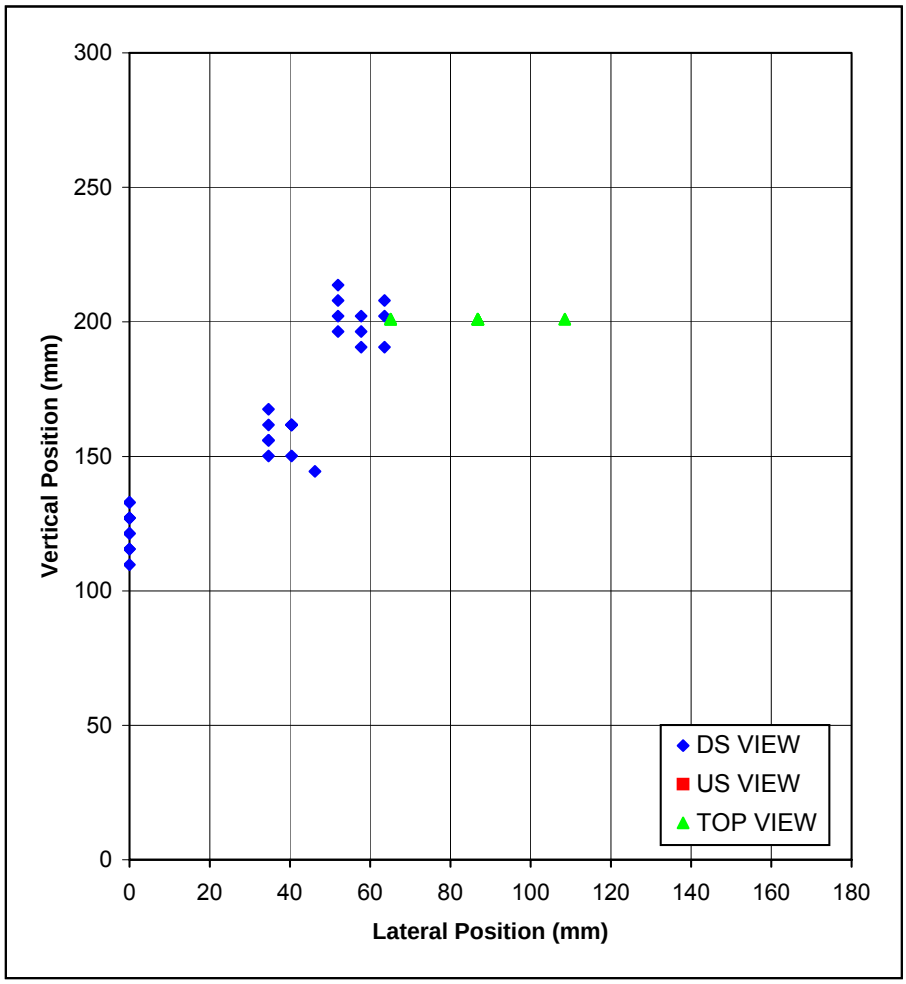

Figure 14. Plot of Data Measurements for Test 404311-1

TEST 511

Table 15. Data Measurements for Test 511

DOWNSTREAM VIEW						UPSTREAM VIEW						TOP VIEW	
Point 1		Point 2		Point 3		Point 1		Point 2		Point 3		Point 3	
Lateral (mm)	Vertical (mm)	Lateral (mm)	Vertical (mm)	Lateral (mm)	Vertical (mm)	Lateral (mm)	Vertical (mm)	Lateral (mm)	Vertical (mm)	Lateral (mm)	Vertical (mm)	Lateral (mm)	Vertical (mm)
0.0	56.0	28.0	83.9	46.6	121.3	0.0	89.4	32.5	130.0	56.9	178.7	67.0	151.3
0.0	65.3	37.3	83.9	56.0	130.6	0.0	97.5	32.5	138.1	56.9	186.9	74.4	151.3
0.0	65.3	46.6	93.3	65.3	130.6	0.0	97.5	32.5	146.2	65.0	186.9	74.4	151.3
0.0	65.3	46.6	93.3	56.0	139.9	0.0	105.6	40.6	146.2	65.0	186.9	89.3	151.3
0.0	37.3	37.3	74.6	56.0	121.3	0.0	89.4	24.4	121.9	56.9	170.6	81.9	151.3
0.0	28.0	28.0	56.0	56.0	111.9	0.0	97.5	32.5	130.0	56.9	178.7	89.3	151.3
0.0	18.7	46.6	56.0	65.3	111.9	0.0	97.5	40.6	130.0	65.0	170.6	81.9	151.3
0.0	28.0	28.0	37.3	65.3	111.9	0.0	97.5	40.6	121.9	65.0	178.7	81.9	151.3
0.0	28.0	46.6	65.3	56.0	130.6	0.0	105.6	40.6	138.1	56.9	186.9	89.3	151.3
0.0	37.3	56.0	74.6	65.3	111.9	0.0	97.5	24.4	130.0	56.9	178.7	81.9	151.3

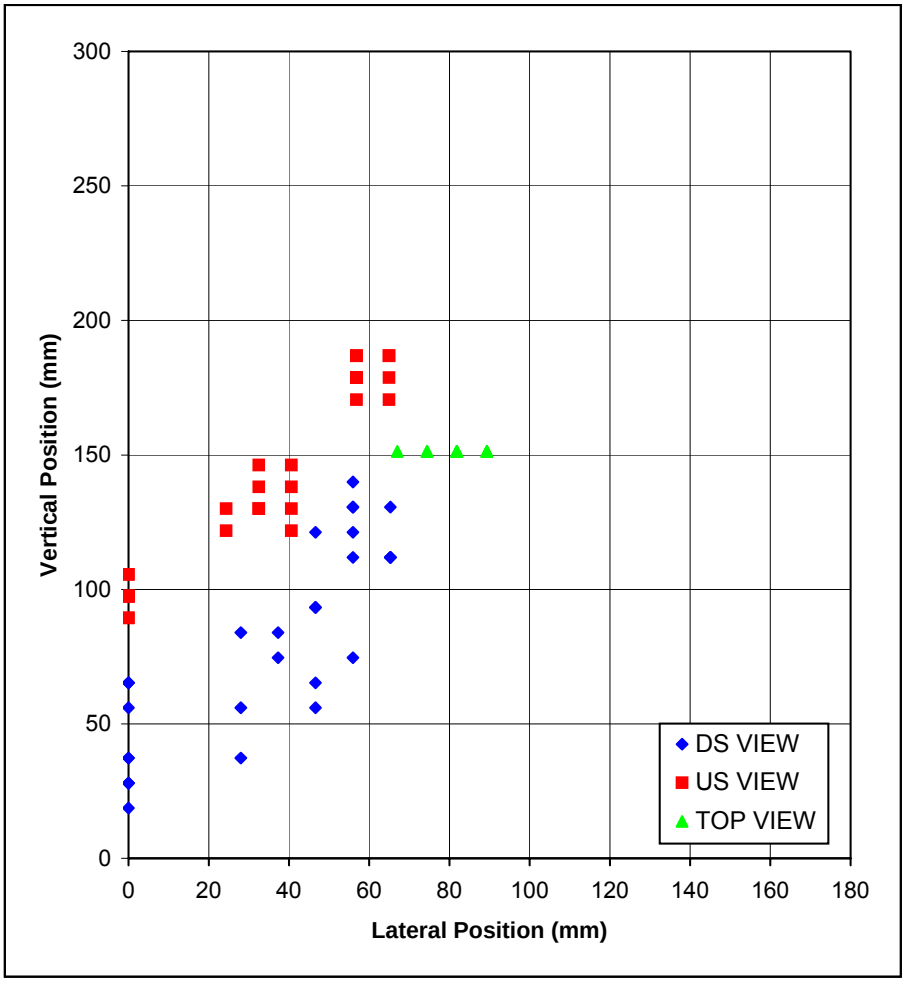

Figure 15. Plot of Data Measurements for Test 511

TEST 544

Table 16. Data Measurements for Test 544

DOWNSTREAM VIEW						UPSTREAM VIEW						TOP VIEW	
Point 1		Point 2		Point 3		Point 1		Point 2		Point 3		Point 3	
Lateral (mm)	Vertical (mm)	Lateral (mm)	Vertical (mm)	Lateral (mm)	Vertical (mm)	Lateral (mm)	Vertical (mm)	Lateral (mm)	Vertical (mm)	Lateral (mm)	Vertical (mm)	Lateral (mm)	Vertical (mm)
0.0	138.6	61.6	169.4	107.8	200.2	0.0	122.2	48.9	146.7	122.2	195.6	75.1	197.2
0.0	123.2	77.0	154.0	123.2	215.6	0.0	97.8	73.3	122.2	122.2	195.6	82.6	197.2
0.0	138.6	61.6	154.0	123.2	215.6	0.0	97.8	73.3	122.2	122.2	171.1	75.1	197.2
0.0	138.6	61.6	169.4	123.2	215.6	0.0	97.8	73.3	122.2	122.2	195.6	75.1	197.2
0.0	123.2	61.6	154.0	107.8	215.6	0.0	97.8	73.3	146.7	122.2	195.6	75.1	197.2
0.0	123.2	77.0	184.8	107.8	200.2	0.0	97.8	73.3	146.7	122.2	171.1	67.6	197.2
0.0	123.2	61.6	169.4	92.4	200.2	0.0	97.8	73.3	146.7	146.7	171.1	75.1	197.2
0.0	138.6	61.6	154.0	107.8	231.0	0.0	97.8	73.3	146.7	146.7	195.6	60.1	197.2
0.0	138.6	61.6	154.0	107.8	200.2	0.0	97.8	97.8	146.7	146.7	171.1	67.6	197.2
0.0	154.0	61.6	169.4	107.8	215.6	0.0	97.8	97.8	122.2	146.7	171.1	67.6	197.2

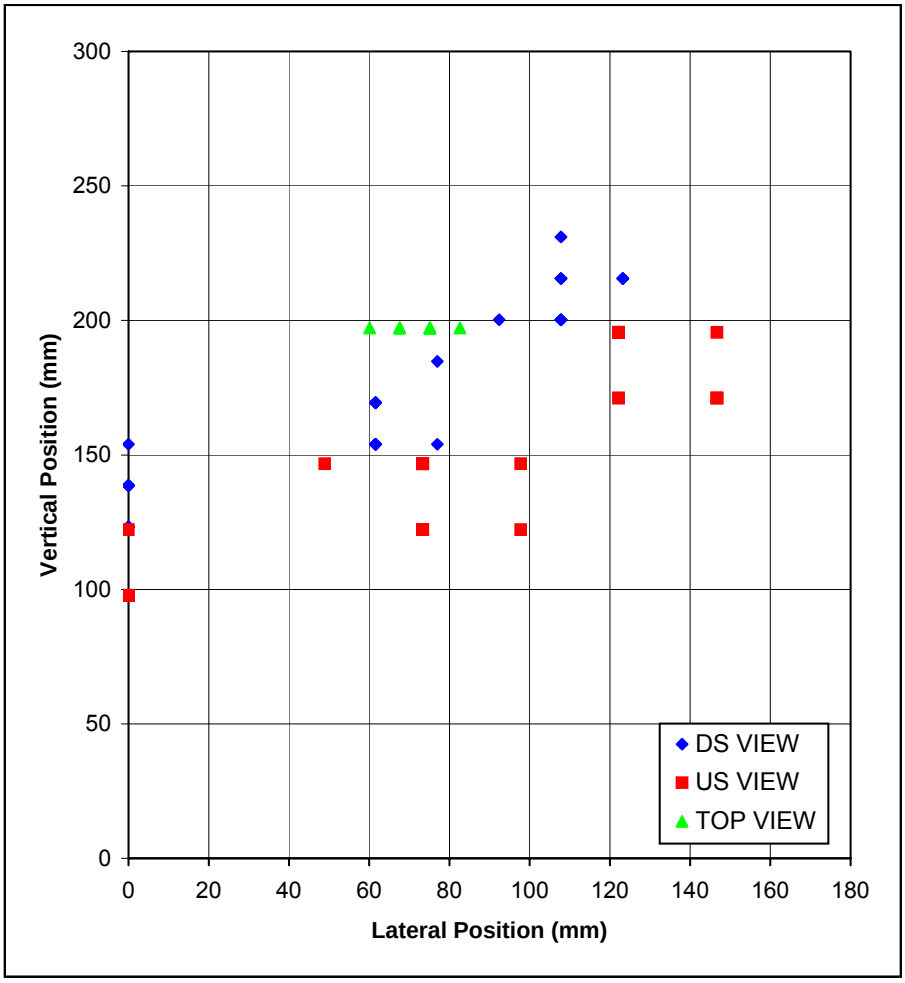

Figure 16. Plot of Data Measurements for Test 544

TEST 531

Table 17. Data Measurements for Test 531

DOWNSTREAM VIEW						UPSTREAM VIEW						TOP VIEW	
Point 1		Point 2		Point 3		Point 1		Point 2		Point 3		Point 3	
Lateral (mm)	Vertical (mm)	Lateral (mm)	Vertical (mm)	Lateral (mm)	Vertical (mm)	Lateral (mm)	Vertical (mm)	Lateral (mm)	Vertical (mm)	Lateral (mm)	Vertical (mm)	Lateral (mm)	Vertical (mm)
						0.0	118.1	52.5	144.3	78.7	196.8	43.7	199.4
						0.0	118.1	65.6	144.3	78.7	183.7	43.7	199.4
						0.0	118.1	52.5	144.3	65.6	209.9	43.7	199.4
						0.0	118.1	52.5	144.3	65.6	196.8	43.7	199.4
						0.0	118.1	52.5	144.3	65.6	209.9	32.8	199.4
						0.0	105.0	26.2	131.2	52.5	170.6	32.8	199.4
						0.0	105.0	39.4	131.2	78.7	183.7	43.7	199.4
						0.0	131.2	26.2	170.6	65.6	223.0	32.8	199.4
						0.0	118.1	26.2	170.6	52.5	196.8	43.7	199.4
						0.0	131.2	26.2	170.6	52.5	223.0	43.7	199.4

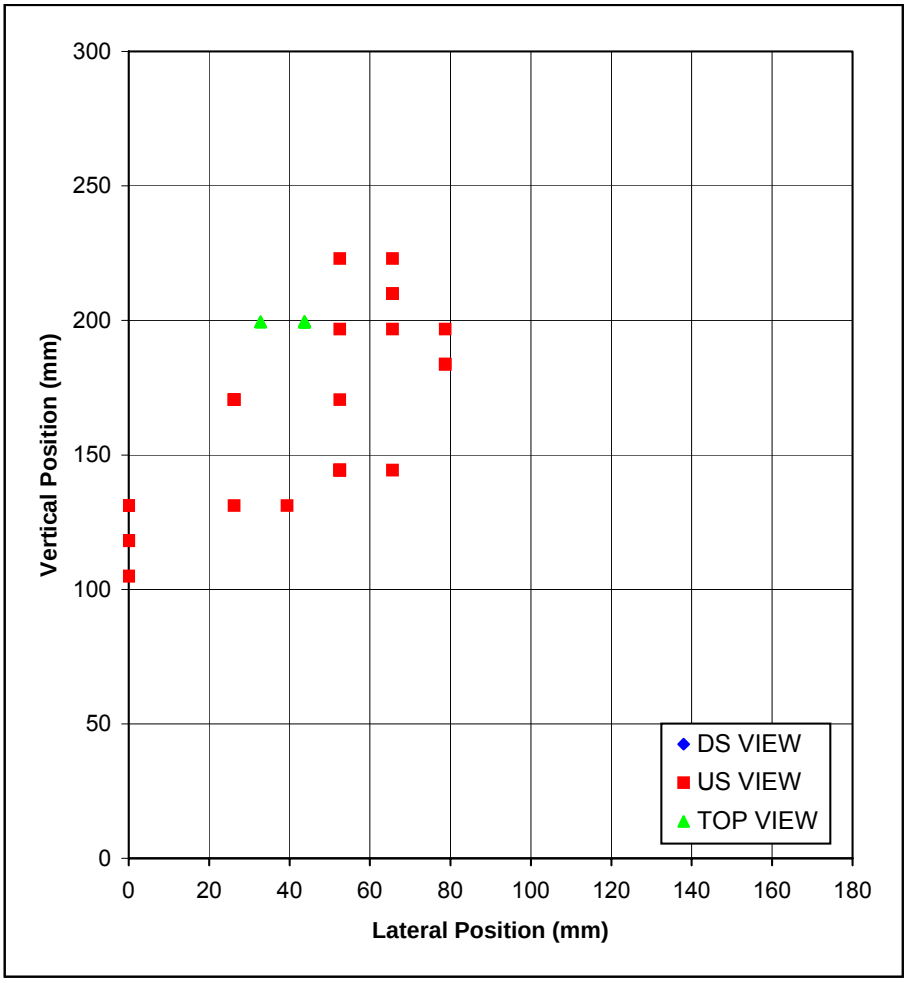

Figure 17. Plot of Data Measurements for Test 531

All of these small cars had similar dimensions, including height to the bottom of the side window. Also, an occupant will sit in a similar position while riding in any of these small cars. Therefore, the resulting head ejection measurements from all eight of the crash tests were compiled into a singular plot by using a common origin. The specific placement of the common origin, or height to the bottom of the window, will be determined in Sections 5.5 and 5.6.

An envelope consisting of segmented lines beginning at the base of the window and extending out and up is constructed by encompassing all of the ejection measurements from the small car tests. This envelope constitutes the area outside the side window of a small car in which an ejected head may occupy during a crash. Figure 18 shows the constructed envelope represented by a series of blue lines surrounding the combined data points from the small car tests.

Note that the bounds of head ejection envelope were found to be defined by impacts with vertical face barriers. This is important to note because it further justifies the choice of using only rigid barriers for this study. Remember, rigid barriers result in higher peak impact forces over shorter time durations than observed in impacts with semi-rigid barriers. Thus, rigid barriers should cause a greater degree of head ejection. Chapter 4 explained how vertical face barriers resulted in the highest peak force levels of the rigid barrier shapes, so having open concrete rails and vertical shape barriers provide the maximum lateral and minimum vertical head positions correlates well with the previous assumption.

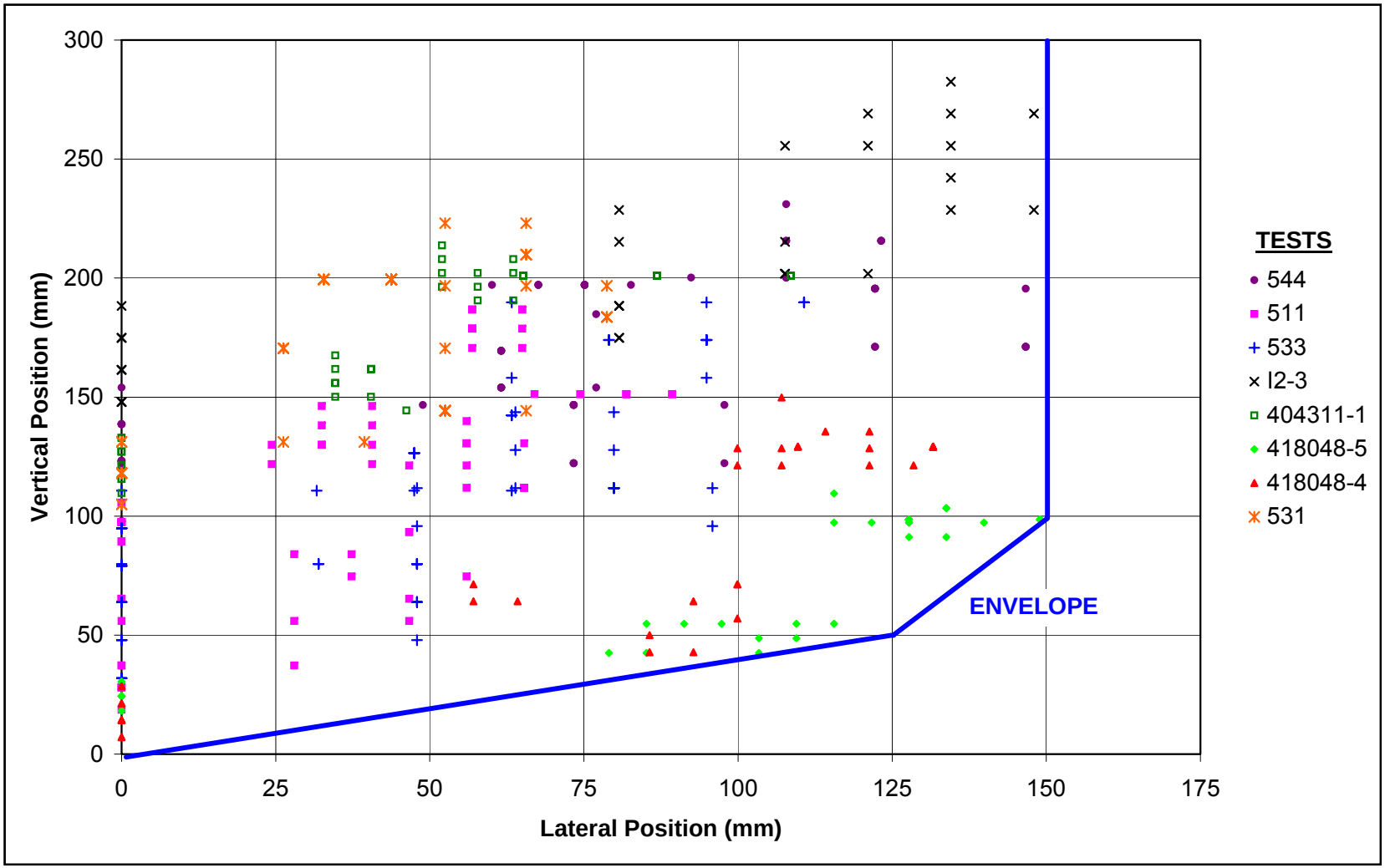

Figure 18. Ejection Envelope Encompassing All Small Car Data

Also note, small cars represent the smallest passenger vehicles on the roadway with the lowest driver height and lowest window height. Therefore, small cars produce the lowest head ejection trajectory, and only define the lower bounds of the head ejection envelope. As such, no upper bound was given to the envelope. Larger vehicles must be used to define the upper portions of the head ejection envelope (see Sections 5.4 and 5.7).

5.4 Head Ejection Measurements from Pickups

Few pickup tests have been run with a dummy in the vehicle because NCHRP Report 350 does not require it. As a result, no crash test videos could be found showing head ejection from a pickup impacting a rigid concrete barrier, which is the ideal situation for this study. The crash tests that were selected for this study have systems with some flexibility, but they were the stiffest barriers tested with available videos showing head ejections from pickups.

Only three crash test videos were used to measure the amount of head ejection occurring from impacts between pickups and longitudinal barriers. These tests were all run in compliance with NCHRP Report 350 test conditions. Table 18 lists the tests as well as the views used for measuring the head displacement. Test 404201-8 involved a steel bridge rail which can be considered as rigid. Tests 404211-4 and 401021-1 were both transition systems going from semi-rigid guardrail to rigid concrete barrier. The Update to NCHRP Report 350 recommends that all tests have a dummy on the impacting side for tests in which an ejected head could impact the barrier or an attachment [75]. This new requirement should produce more tests involving head ejection from pickup trucks.

Table 18. List of Pickup Tests Used to Describe Head Ejection

Test	Ref. No.	Vehicle	Barrier	Impact Condition			Applicable Views		
				Velocity		Angle (deg)	Top	DS	US
				(km/h)	(mph)				
404201-8	76	95 Chevy 2500	Steel Bridge Rail	100.7	62.6	25.4	X	X	
404211-4	77	94 Chevy 2500	Transition - Rein. W-Beam to Concrete	101.1	62.8	24.8	X	X	
401021-1	78	95 Chevy 2500	Transition - Thrie Beam to Concrete	101.7	63.2	25.7	X	X	

The procedure that was used to calculate the maximum lateral and minimum vertical head positions mirrored those procedures used during the small car analysis, as described in Section 5.2. In addition, the maximum vertical position of the head was also determined from the pickup crash test videos. Maximum vertical position data defines the upper bound of the head ejection envelope, or the minimum height for objects directly above the barrier face.

An initial observation from the pickup videos was that the dummy's head is higher on its return path back into the pickup cab. Often times, the head actually hits the top frame of the door before going back inside the cab. Thus, the measurements for the upper bounds on the ejection envelope were taken from frames after the maximum lateral displacement occurred and before the head re-entered the cab.

Three different points on the dummy's head were tracked during the return path from the downstream view. These points are shown in Figure 19 and were numbered (4), (5), and (6). Point (6) is similar to point (3) in the previous analysis and measures the maximum lateral position of the head. Point (4) is the maximum vertical position, and Point (5) is used to define the head contour between the other two. Points (4) through (6) were measured in multiple frames to capture the head's motion from maximum lateral ejection back into the cab. The motion of the head was followed until the vehicle door was no longer in contact with the barrier, sometimes preceding a complete return into the cab.

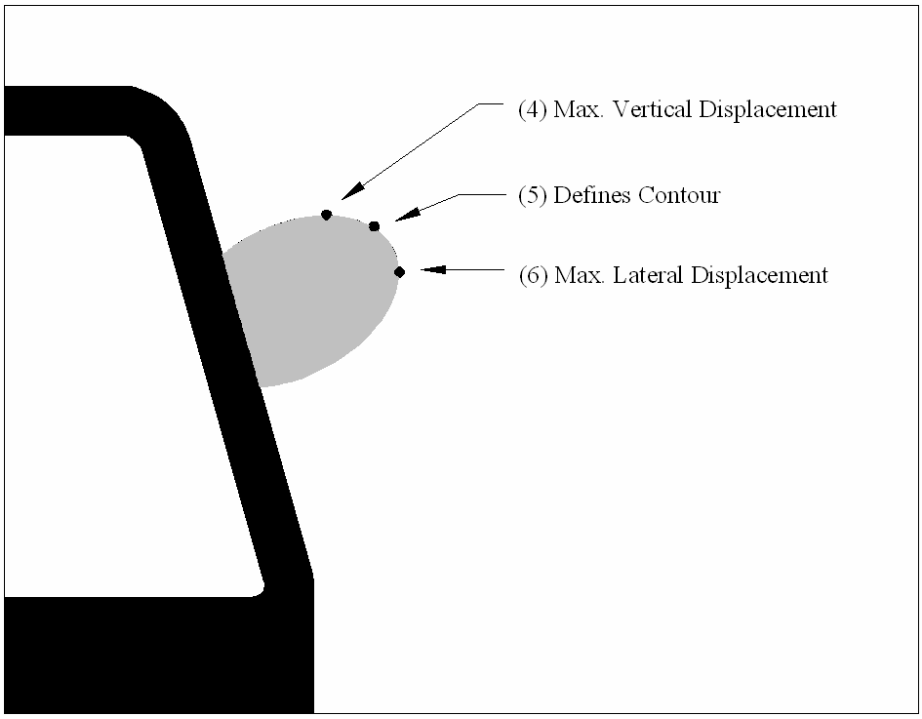

Figure 19. Measured Points to Describe Maximum Vertical Position

The following pages contain the data measured for each individual test in both tabular and graphical formats. Although all 10 measurements for data points (4) through (6) are shown together, the measurements were taken from multiple time frames in order to track the entire return motion from maximum ejection to the head's return to the cab. As with the small car measurements, data points (1) through (3) were all taken from the frame showing maximum ejection.

TEST 404201-8

Table 19. Data Measurements for Test 404201-8

DOWNSTREAM VIEW						TOP VIEW	
Point 1		Point 2		Point 3		Point 3	
Lateral (mm)	Vertical (mm)	Lateral (mm)	Vertical (mm)	Lateral (mm)	Vertical (mm)	Lateral (mm)	Vertical (mm)
30.1	128.0	113.0	150.6	158.2	248.5	145.6	227.4
22.6	135.6	128.0	158.2	150.6	248.5	145.6	227.4
30.1	135.6	120.5	158.2	165.7	233.5	166.4	227.4
30.1	135.6	128.0	158.2	158.2	225.9	166.4	227.4
30.1	113.0	128.0	158.2	158.2	233.5	145.6	227.4
22.6	90.4	105.4	135.6	143.1	225.9	124.8	227.4
22.6	90.4	120.5	135.6	150.6	218.4	124.8	227.4
15.1	82.8	90.4	128.0	143.1	210.9	124.8	227.4
15.1	90.4	97.9	135.6	143.1	203.3	145.6	227.4
22.6	90.4	120.5	143.1	150.6	225.9	145.6	227.4

DOWNSTREAM VIEW - Head Return Motion					
Point 4		Point 5		Point 6	
Lateral (mm)	Vertical (mm)	Lateral (mm)	Vertical (mm)	Lateral (mm)	Vertical (mm)
22.6	384.1	52.7	361.5	105.4	293.7
15.1	384.1	67.8	354.0	105.4	278.6
37.7	308.8	113.0	278.6	143.1	225.9
37.7	316.3	113.0	263.6	143.1	233.5
90.4	323.8	143.1	286.2	150.6	233.5
90.4	316.3	135.6	286.2	158.2	233.5
37.7	414.2	105.4	384.1	135.6	361.5
37.7	421.7	120.5	384.1	143.1	338.9
75.3	399.1	128.0	361.5	158.2	323.8
82.8	399.1	128.0	369.0	150.6	316.3

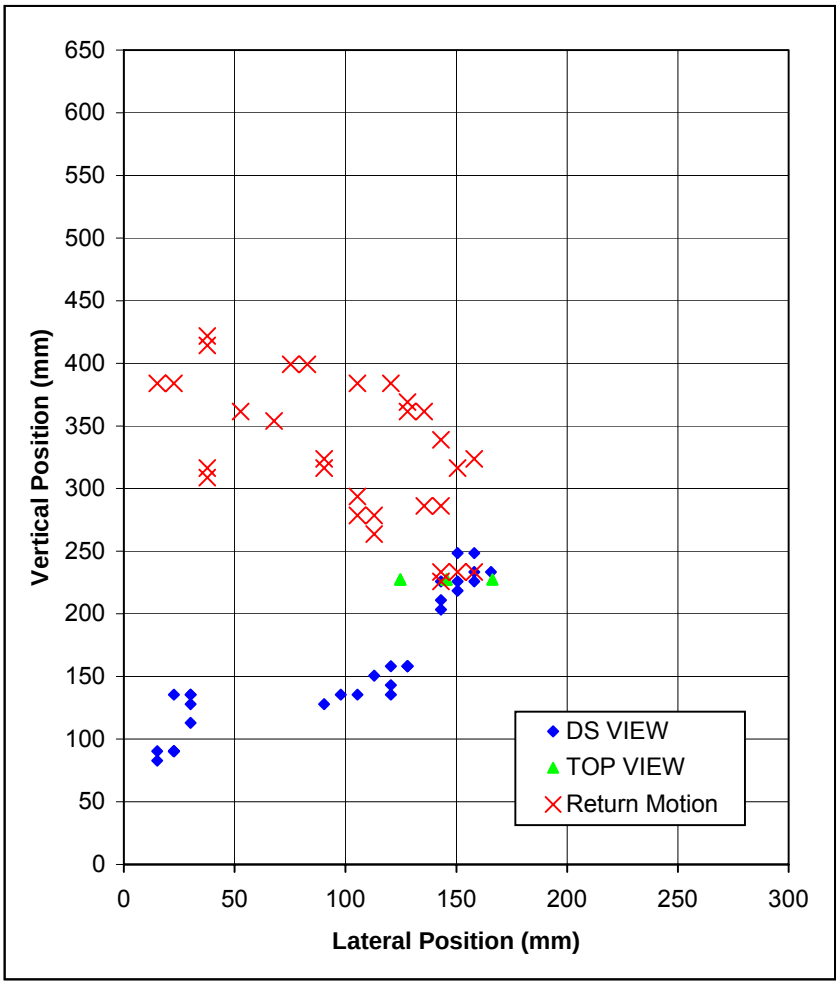

Figure 20. Plot of Data Measurements for Test 404201-8

TEST 404211-4

Table 20. Data Measurements for Test 404211-4

DOWNSTREAM VIEW						TOP VIEW	
Point 1		Point 2		Point 3		Point 3	
Lateral (mm)	Vertical (mm)	Lateral (mm)	Vertical (mm)	Lateral (mm)	Vertical (mm)	Lateral (mm)	Vertical (mm)
67.4	211.1	220.1	238.1	247.1	301.0	253.8	279.0
71.9	211.1	211.1	238.1	247.1	287.5	253.8	279.0
71.9	215.6	206.6	224.6	242.6	287.5	232.7	279.0
76.4	211.1	211.1	229.1	242.6	292.0	253.8	279.0
58.4	184.2	161.7	206.6	202.1	251.6	253.8	279.0
62.9	193.2	157.2	206.6	197.6	274.0	232.7	279.0
58.4	197.6	179.7	215.6	197.6	269.5	211.5	279.0
58.4	197.6	184.2	224.6	211.1	265.0	232.7	279.0
80.9	211.1	193.2	229.1	233.6	278.5	211.5	279.0
76.4	206.6	202.1	224.6	229.1	283.0	232.7	279.0

DOWNSTREAM VIEW - Head Return Motion					
Point 4		Point 5		Point 6	
Lateral (mm)	Vertical (mm)	Lateral (mm)	Vertical (mm)	Lateral (mm)	Vertical (mm)
76.4	426.7	130.3	390.8	161.7	341.4
71.9	426.7	125.8	390.8	152.7	332.4
98.8	381.8	152.7	363.9	188.7	314.4
94.3	381.8	157.2	350.4	184.2	309.9
103.3	408.8	170.7	377.3	188.7	323.4
103.3	413.3	166.2	372.8	184.2	323.4
62.9	435.7	130.3	408.8	161.7	345.9
76.4	431.2	134.8	399.8	152.7	345.9
112.3	413.3	161.7	395.3	197.6	345.9
116.8	413.3	170.7	386.3	202.1	318.9

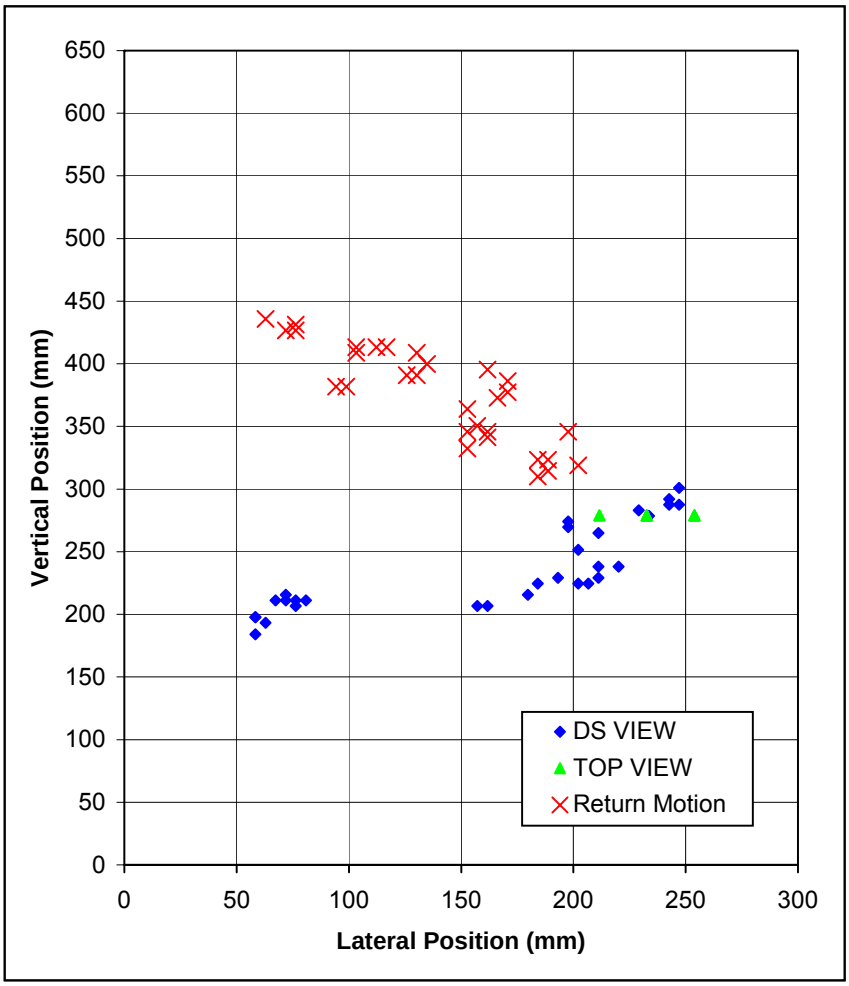

Figure 21. Plot of Data Measurements for Test 404211-4

TEST 401021-1

Table 21. Data Measurements for Test 401021-1

DOWNSTREAM VIEW						TOP VIEW	
Point 1		Point 2		Point 3		Point 3	
Lateral (mm)	Vertical (mm)	Lateral (mm)	Vertical (mm)	Lateral (mm)	Vertical (mm)	Lateral (mm)	Vertical (mm)
81.7	261.6	204.4	294.3	245.2	392.4	259.7	375.2
81.7	269.7	220.7	302.4	253.4	384.2	281.4	375.2
73.6	277.9	196.2	286.1	253.4	359.7	281.4	375.2
81.7	269.7	196.2	294.3	253.4	376.0	281.4	375.2
73.6	269.7	204.4	294.3	253.4	376.0	281.4	375.2
65.4	261.6	204.4	318.8	261.6	376.0	281.4	375.2
81.7	269.7	212.5	302.4	253.4	376.0	259.7	375.2
81.7	253.4	228.9	302.4	261.6	376.0	259.7	375.2
89.9	245.2	212.5	277.9	261.6	367.8	281.4	375.2
89.9	245.2	228.9	294.3	261.6	367.8	281.4	375.2

DOWNSTREAM VIEW - Head Return Motion					
Point 4		Point 5		Point 6	
Lateral (mm)	Vertical (mm)	Lateral (mm)	Vertical (mm)	Lateral (mm)	Vertical (mm)
114.4	604.9	171.7	564.0	212.5	482.3
106.3	604.9	179.8	555.8	204.4	506.8
106.3	621.2	171.7	572.2	212.5	482.3
106.3	629.4	188.0	572.2	220.7	506.8
81.7	588.5	147.1	531.3	179.8	449.6
89.9	588.5	155.3	531.3	188.0	457.7
122.6	506.8	204.4	457.7	237.0	384.2
130.8	515.0	204.4	449.6	245.2	400.5
130.8	515.0	212.5	474.1	253.4	416.9
130.8	531.3	204.4	474.1	245.2	408.7

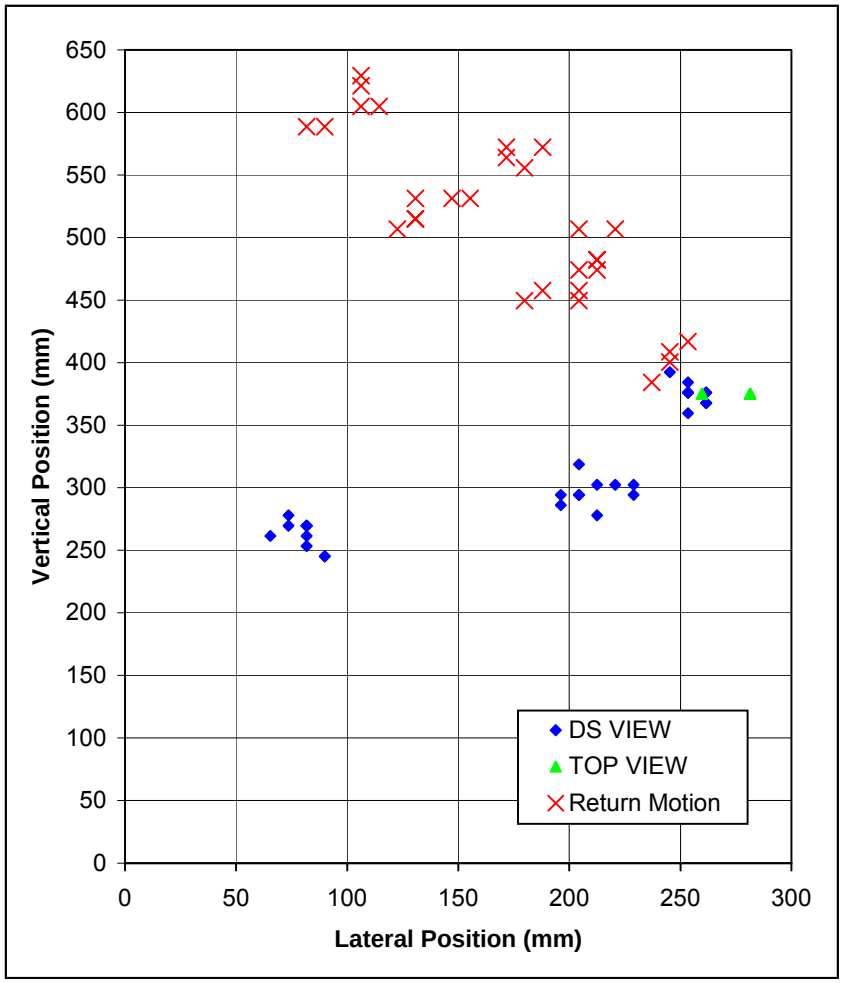

Figure 22. Plot of Data Measurements for Test 401021-1

Data measurements from all three of the crash tests were compiled into a singular plot by assuming a common origin. This assumption was justified by pointing out that pickups are all of similar dimensions, including height to the bottom of the window, and occupant seating positions. Therefore, the resulting head ejection measurements were similar.

The envelope encompassing all of the ejection measurements from the pickup tests was constructed with line segments similar to that prepared for the small car envelope. However, the pickup ejection envelope must be considered as two independent boundaries. One boundary defines the maximum lateral ejection and minimum vertical position of the head. The other boundary defines the maximum vertical position of the head. The boundaries are considered separately because the lower boundary needs to be located at the lowest possible pickup height, while the upper bound will be located at the maximum possible pickup height. The exact location of each boundary is presented in Section 5.5. Figure 23 depicts the two ejection envelope bounds surrounding the combined data points from the pickup tests.

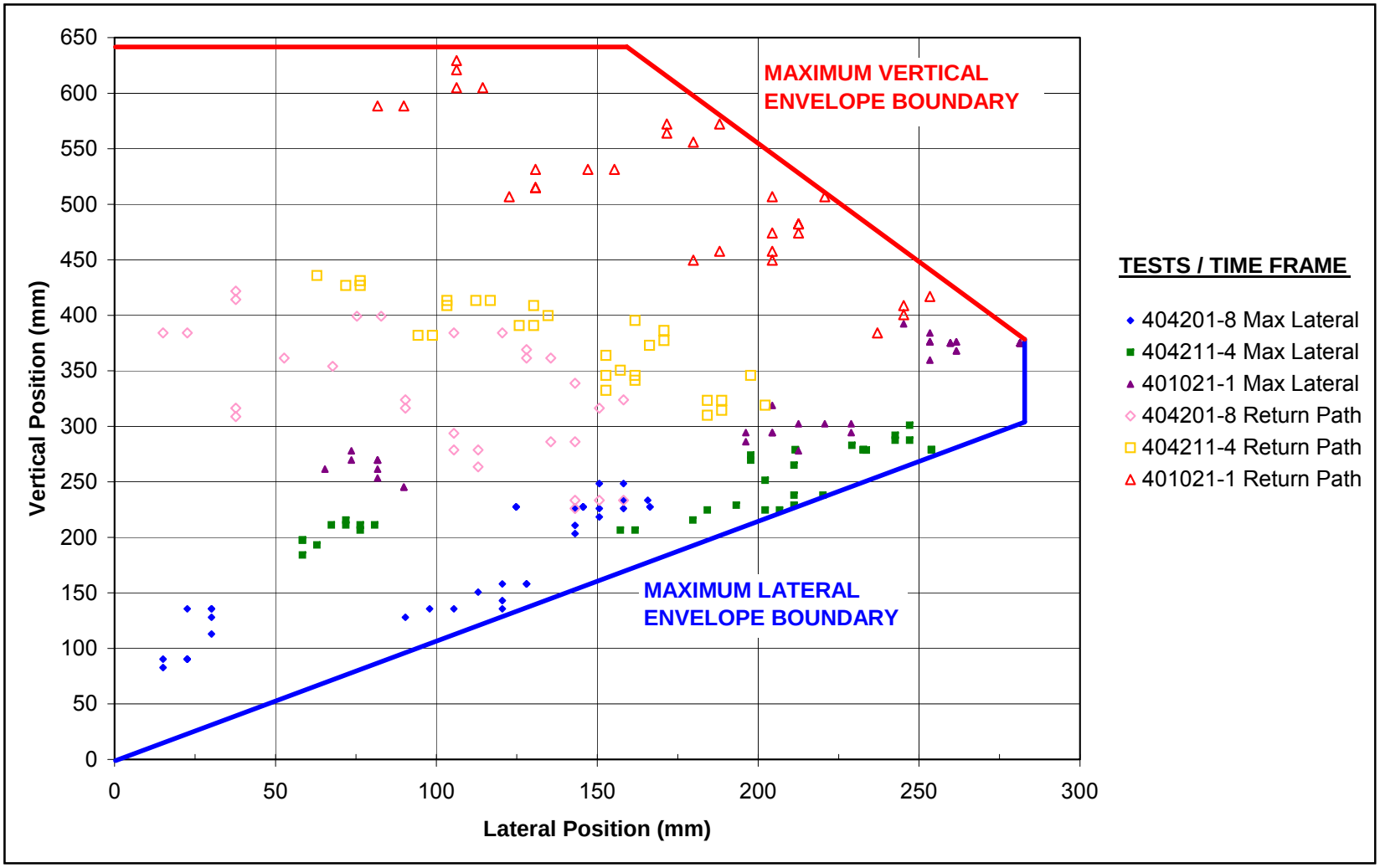

Figure 23. Ejection Envelope Boundaries Encompassing All Pickup Data.

5.5 Placement of Ejection Envelopes

The head ejection envelopes for small cars and pickups must then be placed in the correct position to create a singular envelope describing head ejection for both small cars and pickups. This required only the proper placement for the bottom of the window on the plane normal to the barrier face for each of the two vehicle classes.

As explained in Section 5.2, the time of maximum head ejection is normally near the time when the vehicle becomes parallel with the barrier. At this point, the side of the vehicle, including the bottom of the side window, is in direct contact with the face of the barrier. Therefore, the origin of each vehicle envelope was given a horizontal position on the face of the barrier. In the case of a vertical barrier, the envelope origins were aligned vertically.

The vertical position of the two head ejection envelopes was determined by identifying the critical bottom window height for each envelope. Since the maximum lateral and minimum vertical head extents are defined by the same envelope, these envelopes are critical at the lowest heights. Aligning the maximum ejection with the minimum window height ensures a conservative envelope that encompasses all of the larger vehicles as well. Therefore, the maximum ejection envelopes for both small cars and pickup trucks were placed at the lowest window height for their respective vehicle types. On the other hand, aligning the pickup's upper envelope bound with the maximum window height ensured that the ejection envelope encompassed ejections from all vehicles. Therefore, the pickup's upper bound ejection envelope needed to be placed at the critical maximum pickup window height.

Many different vehicles were measured in order to determine these critical minimum and maximum heights to the bottom of the window. The first measurements taken were from

vehicles in the Midwest Roadside Safety Facility's test site, those which met the NCHRP Report 350 criteria for a small car test. Measuring actual test vehicles was considered a priority because 1) all of the collected ejection data came from these vehicles, and 2) these vehicles represent the smallest vehicles on the roadway. Vehicles matching the test vehicle classifications were also measured at car dealership lots. New vehicles, model year 2006, from the show rooms and used vehicles on the lots were measured at multiple dealerships including Ford, Chevrolet, Dodge, Saturn, Nissan, Honda, and Toyota.

Each vehicle's side window height was measured twice, once on the driver side and once on the passenger side. The measurements were read with an English-unit tape measure and taken to the nearest half inch. Table 22 lists heights taken to the bottom of the window for every vehicle make and model measured.

The trend of windows being higher in the newer model vehicles was easily observed. However, the older and smaller vehicles are still on the roadways and should be used in the head ejection design. The minimum height to the bottom of the side window was found to be 890 mm (35 in.) for small cars and 1,245 mm (49 in.) for pickups. The maximum height to the bottom of a pickup window was 1,372 mm (54 in.). All occurrences of the minimum window heights are highlighted in yellow, while the maximum window height is highlighted in red in Table 22.

By placing the three envelope bounds in the correct locations, the total shape of the head ejection envelope was created. This singular envelope is illustrated in Figure 24 as an assembly of boundaries. Dimensions are not given because slight changes accounting for vehicle movements are necessary and are quantified in Section 5.6. Note that a vertical barrier face was assumed for the illustration.

Table 22. Heights to the Bottom of the Side Window

MAKE / MODEL	MIN. HEIGHT (m)	SAMPLE HEIGHTS TO BOTTOM OF WINDOW (m)					
Used Small Cars - Various Years							
Chevy Cavalier 4-door	0.91	0.91	0.94	0.93	0.91	0.94	0.94
Chevy Cavalier 2-door	0.91	0.91	0.91	0.91	0.93	0.91	0.91
Honda Civic 4-door	0.89	0.93	0.91	0.89	0.91	0.90	0.94
Honda Civic 2-door	0.89	0.89	0.89				
Honda Accord 4-door	0.97	0.97	0.97	0.97	0.97		
Honda Accord 2-door	0.97	0.97	0.97				
Ford Escort 2-door	0.89	0.90	0.89	0.89	0.91		
Ford Focus 4-door	0.94	0.94	0.97	0.95	0.95		
Ford Contour 4-door	0.91	0.91	0.91				
Toyota Corolla 4-door	0.89	0.89	0.97	0.95	0.91		
Pontiac Sunfire 2-door	0.91	0.91	0.94	0.93	0.94	0.93	0.91
Dodge Neon 4-door	0.89	0.89	0.90	0.91	0.89	0.89	0.90
Toyota Echo	0.95	0.95	0.95				
Saturn Ion 4-door	0.89	0.89	0.93	0.91	0.89	0.90	0.89
Geo Metro	0.89	0.91	0.91	0.90	0.89		
Kia Rio	0.91	0.91	0.91				
Small Cars - 2006 Models							
Chevy Cobalt	0.94	0.94	0.95				
Eagle Legacy	0.95	0.95	0.95				
Subaru WRX	0.97	0.97	0.97				
Hyundai Tiburon	0.95	0.95	0.95				
Nissan Sentra	0.97	0.97	0.97				
Hyundai Elantra	0.97	0.97	0.97				
Honda S2000	0.89	0.89	0.89				
Honda Civic	0.97	0.97	0.97				
Honda Accord	0.97	0.97	0.97				
Saturn Ion	0.97	0.97	0.98				
Ford Fusion	0.99	0.99	0.99				
Ford Mustang	0.98	0.98	0.98				
Mazda RX-8	0.97	0.97	0.97				
Ford Focus	0.99	0.99	0.99				
Dodge Neon	0.91	0.91	0.91				
Toyota Prius	0.99	0.99	0.99				
Toyota Corolla	1.00	1.02	1.00				
Used Pickups - Various Years							
Chevy 2500	1.24	1.24	1.24	1.27	1.27	1.26	1.24
Ford F-150	1.24	1.27	1.27	1.28	1.28	1.24	1.26
Dadge Ram	1.31	1.32	1.31	1.35	1.35		
Pickups - 2006 Models							
Chevy Silverado	1.30	1.30	1.30				
Nissan Armada	1.27	1.27	1.27				
Ford F-150	1.27	1.27	1.27				
Ford F-250	1.30	1.30	1.30				
Dodge Ram	1.36	1.36	1.37				
Toyota Tundra	1.32	1.32	1.32				

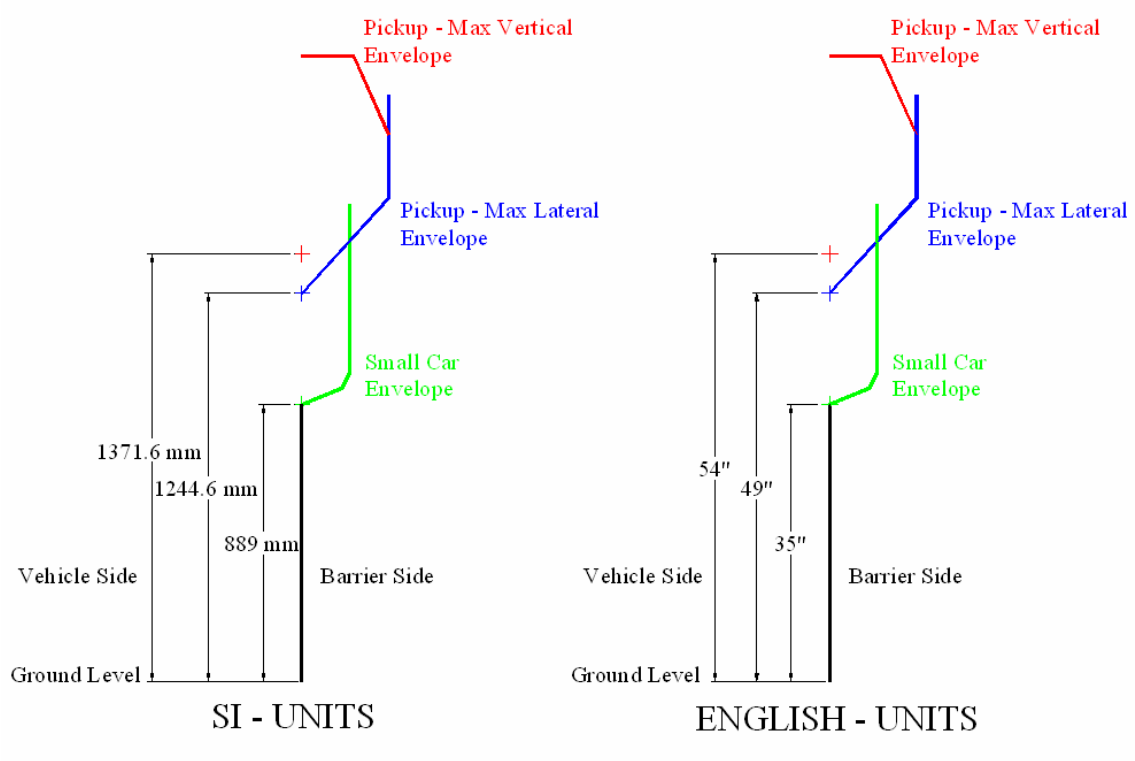

Figure 24. Assembly of Head Ejection Envelope

5.6 Envelope Adjustments for Vehicle Movement

Head ejection measurements were made relative to the bottom of the vehicle's side window, and the height to the window was determined from vehicle measurements. However, the window heights taken from stationary vehicles in Section 5.5 must be adjusted for a movement during the impact event. Vehicle roll, for example, would lower the window height and may lead to head ejection outside of the envelope.

The expected magnitude and direction of vehicle roll is dependant on the shape of the barrier. Safety shape barriers, and to a lesser degree single-slope barriers, allow vehicles to climb during impacts. Vehicle climb raises the impact side of the vehicle and causes it to roll

away from the barrier. Vertical barriers, on the other hand, produce little to no climb and tend to cause impacting vehicles to roll toward the barrier. Only roll toward the barrier will lower the vehicle side window and adversely affect the bounds of the head ejection envelope. Also, as discussed in Section 5.3, impacts with vertical faced barriers set the bounds for the head ejection envelope, so alterations to the envelope due to vehicle movement should be the result of studying similar impacts. As such, only impacts with vertical-faced barriers were used to measure the movement of the side window.

In most cases, the same crash test videos used to measure the head displacements in Sections 5.3 and 5.4 were used to measure vehicle movement. All four of the small car tests selected and two of the four pickup tests selected came from previously used videos. The pickup videos used to measure head displacement were not rigid, so it was unclear whether these tests would give good results for vertical vehicle movement. Therefore, two additional videos, test nos. MN-3 and NEOCR-5, were added to observe the effects of a pickup impacting a vertical concrete face since none of the pickup ejection videos contained such an impact. Test MN-3 impacted a vertical shape barrier [41], while NEOCR-5 impacted an open concrete bridge rail [62].

Using the downstream view, the vertical distance from the bottom of the vehicle side window was measured, first at impact, and then again at the time of maximum head ejection. For test nos. MN-3 and NEOCR-5, the second measurement was taken when the vehicle was parallel with the wall. The differences in measurements were then recorded and are listed in Table 23 and Table 24.

Table 23. Measured Vertical Movement of Side Window During Impact (SI)

Test	Vehicle Type	Ref No.	Sample Measurements for Change in Vertical Position of Side Window (mm)										Average (mm)	Max. Vert. Shift (mm)
418048-4	Small Car	43	0.0	7.1	0.0	0.0	-7.1	-7.1	0.0	-7.1	0.0	-7.1	-2.1	-7.1
418048-5	Small Car	43	0.0	-6.1	-12.1	-6.1	-12.1	-6.1	-6.1	0.0	-6.1	-12.1	-6.7	-12.1
I2-3	Small Car	41	-13.5	-13.5	0.0	0.0	-13.5	-13.5	13.5	0.0	0.0	-13.5	-5.4	-13.5
404311-1	Small Car	74	0.0	5.8	-5.8	0.0	0.0	5.8	5.8	0.0	0.0	5.8	1.7	-5.8
404201-8	Pickup	76	-37.6	-45.1	-45.1	-45.1	-45.1	-45.1	-45.1	-45.1	-45.1	-37.6	-43.6	-45.1
401021-1	Pickup	78	-48.9	-57.1	-40.8	-40.8	-57.1	-48.9	-57.1	-48.9	-48.9	-57.1	-50.6	-57.1
MN-3	Pickup	40	17.7	-17.7	-17.7	0.0	-17.7	-35.4	0.0	-17.7	0.0	-17.7	-10.6	-35.4
NEOCR-5	Pickup	61	-38.2	-38.2	-38.2	-19.1	-38.2	-38.2	-38.2	-38.2	-57.3	-38.2	-38.2	-57.3

Table 24. Measured Vertical Movement of Side Window During Impact (English)

Test	Vehicle Type	Ref No.	Sample Measurements for Change in Vertical Position of Side Window (in.)										Average (in.)	Max. Vert. Shift (in.)
418048-4	Small Car	43	0.00	0.28	0.00	0.00	-0.28	-0.28	0.00	-0.28	0.00	-0.28	-0.08	-0.28
418048-5	Small Car	43	0.00	-0.24	-0.48	-0.24	-0.48	-0.24	-0.24	0.00	-0.24	-0.48	-0.26	-0.48
I2-3	Small Car	41	-0.53	-0.53	0.00	0.00	-0.53	-0.53	0.53	0.00	0.00	-0.53	-0.21	-0.53
404311-1	Small Car	74	0.00	0.23	-0.23	0.00	0.00	0.23	0.23	0.00	0.00	0.23	0.07	-0.23
404201-8	Pickup	76	-1.48	-1.78	-1.78	-1.78	-1.78	-1.78	-1.78	-1.78	-1.78	-1.48	-1.72	-1.78
401021-1	Pickup	78	-1.93	-2.25	-1.61	-1.61	-2.25	-1.93	-2.25	-1.93	-1.93	-2.25	-1.99	-2.25
MN-3	Pickup	40	0.70	-0.70	-0.70	0.00	-0.70	-1.39	0.00	-0.70	0.00	-0.70	-0.42	-1.39
NEOCR-5	Pickup	61	-1.50	-1.50	-1.50	-0.75	-1.50	-1.50	-1.50	-1.50	-2.26	-1.50	-1.50	-2.26

All of the small car data showed similar results. A small downward movement of the side window was observed during all of the impacts. A maximum displacement of approximately 13 mm (0.5 in.) was recorded during the crash test nos. I2-3 and 418048-5. The entire envelope boundary describing head ejection from small cars was lowered by 13 mm (0.5 in.) to accommodate the worst case conditions identified during crash testing.

The added videos of pickups impacting rigid concrete barriers recorded similar results as the videos of pickups impacting less rigid barriers. A maximum displacement of approximately 57 mm (2.25 in.) was recorded during the crash test nos. 401021-1 and NEOCR-5. Thus, the

maximum lateral head ejection boundary for pickup trucks was lowered by 57 mm (2.25 in.). Note that the vertical boundary of the ejection envelope was not adjusted to assure that the envelope would accommodate impacts wherein the vehicle does not roll toward the barrier. Figure 25 and Figure 26 depict the head ejection envelope after adjustments for vertical movement of the side window during impact.

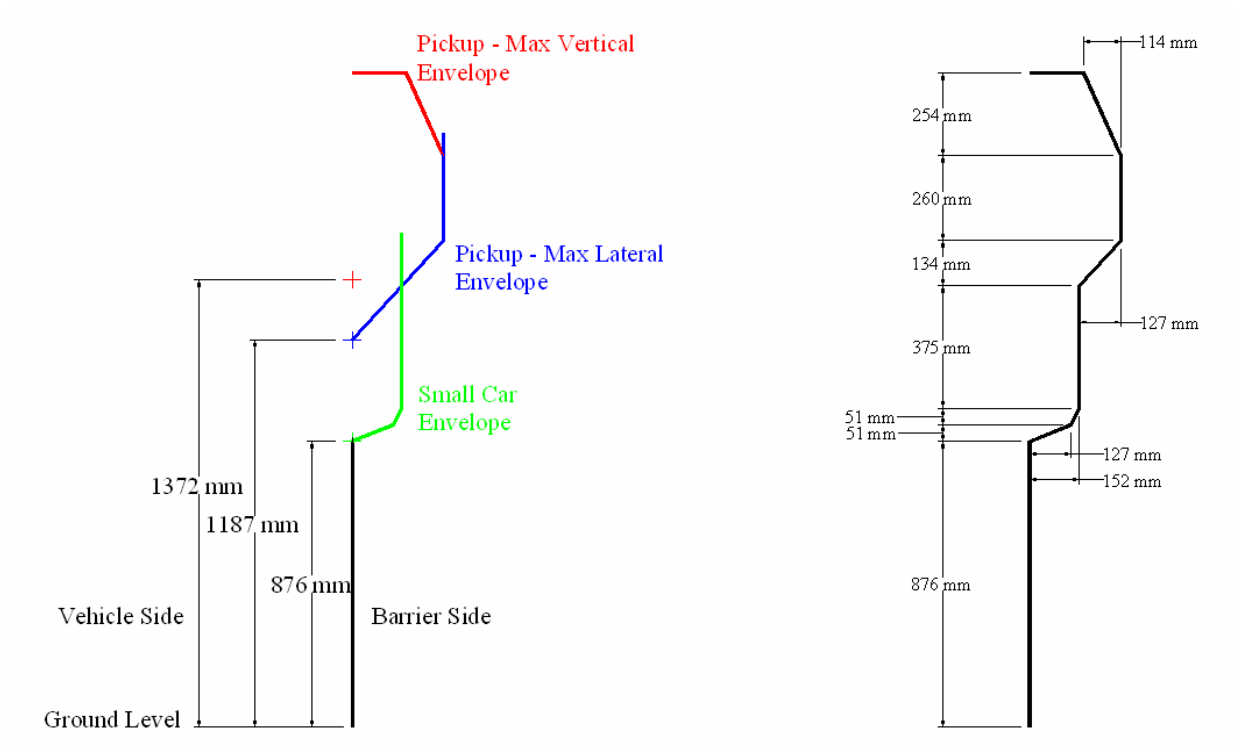

Figure 25. Head Ejection Envelope with Vehicle Movement Adjustments (SI)

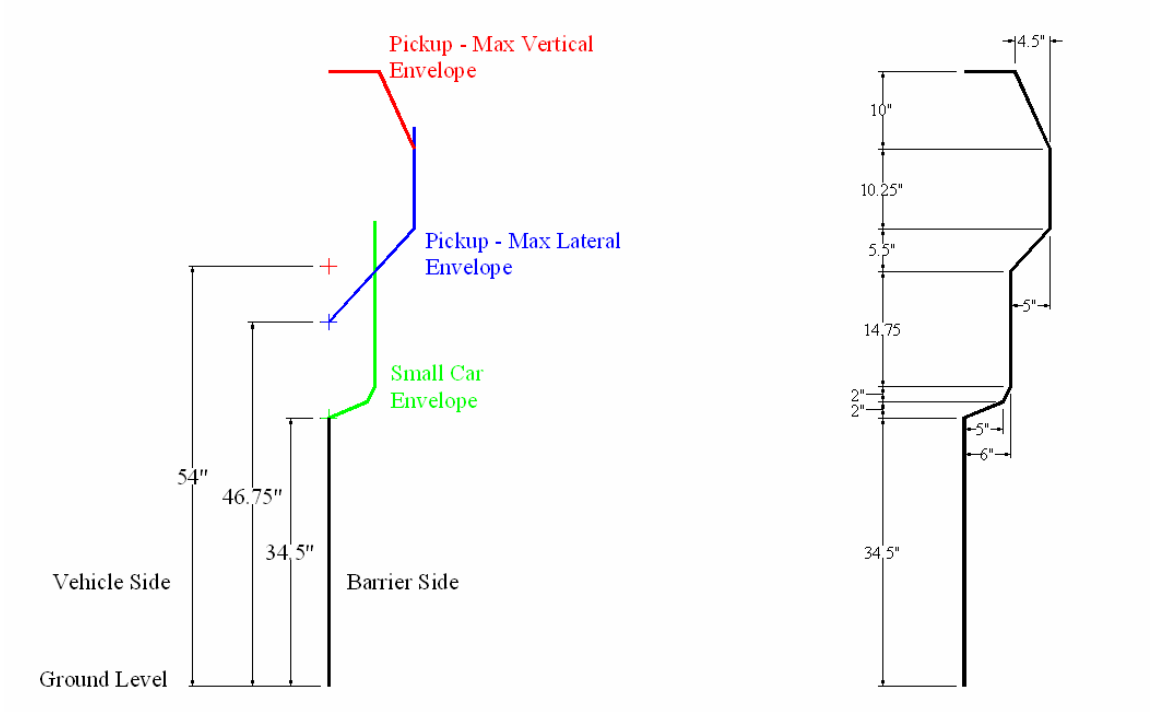

Figure 26. Head Ejection Envelope with Vehicle Movement Adjustments (English)

5.7 Head Ejection Interpolation for Mid-Size Vehicles

The head ejection envelope is incomplete without the considerations of mid-size vehicles. Here, 'mid-size vehicles' refers to sedans, SUVs, small pickups, and other vehicles falling in between the size requirements for small cars and full-size pickups in NCHRP Report 350. These vehicles must be included in the ejection envelope design in order to assume safe performance for the full range of passenger vehicles.

Mid-size vehicles are not defined in NCHRP Report 350 as a standard test vehicle. As a result, very few tests have been run with midsize vehicles, and no crash test videos showing head ejection could be found. Therefore, the head ejection from midsize vehicles had to be interpolated from the ejection of small cars and pickups.

The primary difference in head ejection between small cars and pickups is in the position a passenger sits in these vehicles. As explained in Section 5.2, a pickup passenger sits in a more upright and higher position relative to the window than a small car passenger. Sections 5.3 and 5.4 illustrated how this difference in positions leads to different head ejection displacements. Ejections from small cars were lower vertically, and in some cases, bounded only by the bottom of the window. Ejections from pickups were not only higher vertically, but also further laterally. Thus, increasing the vertical position of the passenger with respect to the window increases the maximum lateral head displacement and increases the vertical position of the head at the moment of maximum lateral displacement.

Passengers of mid-size vehicles sit in positions somewhere between those of small cars and pickups. So, mid-size vehicles would exhibit more lateral head displacement than a small car and a lower minimum vertical position than a pickup. In order to quantify the head ejection displacements of mid-size vehicles, both the maximum lateral ejection and the minimum vertical position were assumed to be linear functions of the head height above the side window base.

The first step in finding these linear functions was to identify dummy head heights relative to the side windows for the tests listed in Sections 5.3 and 5.4. The measurements came from test report pictures or video providing side or front views of the vehicle with the dummy properly seated. The distance to the top of the dummy's head from the base of the side window was measured and then scaled by a known distance such as vehicle length or vehicle height. Most tests had pre-impact pictures in the test reports or pre-impact video of these views. In a few cases when the crash video itself had to be used, a frame showing the head position and the vehicle height was utilized from either the downstream or upstream views. A clear photo or

video could not be found to estimate the head height above the window for crash test 531, so it was not used in the interpolating process. Table 25 lists the dummy's head height above the window base along with the lateral and vertical position of the maximum lateral ejection point for each test found in Sections 5.3 and 5.4.

Table 25. Head Heights from the Window Base and Ejection Measurements

Test	Ref. No.	Vehicle Type	Head Height Above Window Base		Maximum Ejection			
					Lateral		Vertical	
			(mm)	(in)	(mm)	(in)	(mm)	(in)
418048-5	44	small car	320.0	12.60	149.1	5.87	98.6	3.88
418048-4	44	small car	320.3	12.61	131.6	5.18	129.3	5.09
544	59	small car	330.5	13.01	146.6	5.77	171.2	6.74
533	9	small car	319.5	12.58	110.7	4.36	189.7	7.47
I2-3	41	small car	326.1	12.84	148.1	5.83	228.6	9.00
511	40	small car	340.4	13.40	89.4	3.52	151.4	5.96
404311-1	74	small car	324.1	12.76	108.5	4.27	200.9	7.91
404211-4	77	pickup	402.3	15.84	253.7	9.99	278.9	10.98
401021-1	78	pickup	420.4	16.55	281.4	11.08	375.2	14.77
404201-8	76	pickup	405.6	15.97	166.4	6.55	227.3	8.95

A plot was made of lateral ejection as a function of head height above the window base. A line was then drawn over the top of all the data points representing a linear boundary for maximum lateral head ejection for a specific head height. The line was constructed to predict the maximum effect of head height above the window in order to provide a conservative prediction of head ejection distance. The equation for this linear interpolation is

$$L_{max}(mm) = 33.53 * h(mm) - 271.53 \qquad \text{(eq 5.1-a)}$$

or

$$L_{max}(in.) = 1.32 * h(in.) - 10.69 \qquad \text{(eq 5.1-b)}$$

where L_{max} is the maximum lateral ejection and h is the head height above the bottom of the window. Figure 27 shows the data plot with the interpolation line for maximum lateral ejection.

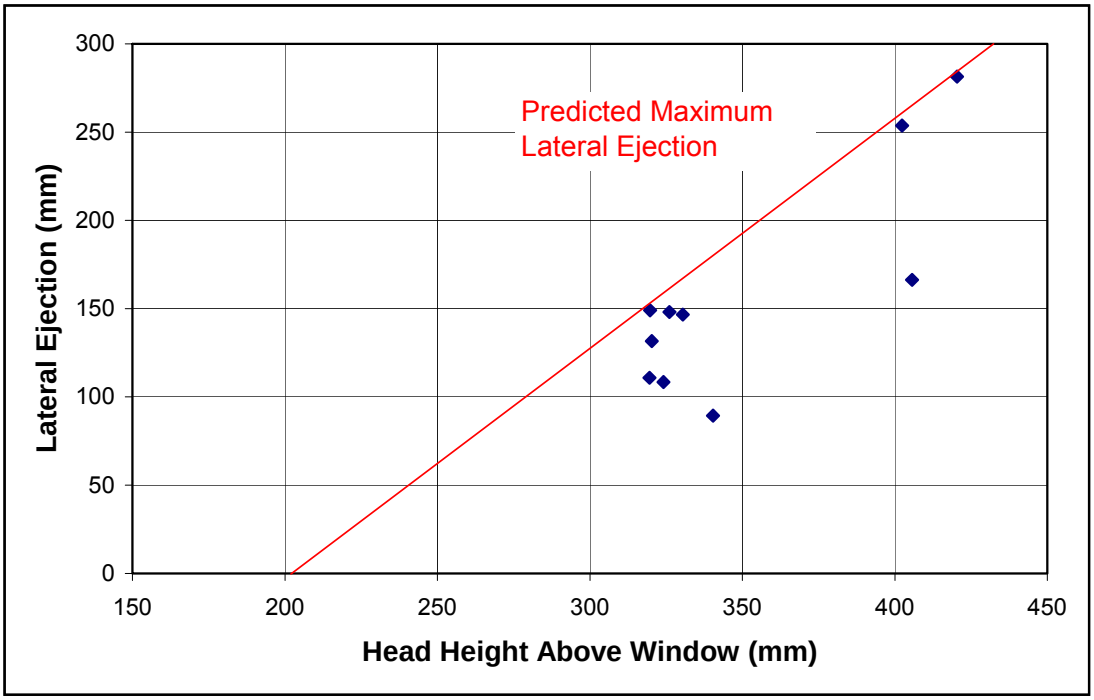

Figure 27. Measured Lateral Ejection vs. Head Height and Boundary Line

The same process was repeated for the vertical position of the head. A plot was constructed of vertical ejection vs. head height above the window, and a boundary line was drawn. This time, the line was drawn under the data points because the lower bound vertical position was critical for small and intermediate vehicles. This line illustrates the conservative prediction tool used to interpolate the vertical ejection position for mid-size vehicles. The interpolation equation for the vertical ejection position is

$$V_{min}(mm) = 39.88 * h(mm) - 409.45 \qquad \text{(eq 5.2-a)}$$

or

$$V_{min}(in.) = 1.57 * h(in.) - 16.12 \qquad \text{(eq 5.2-b)}$$

where V_{min} is the minimum vertical ejection position. Figure 28 shows the data plot and the boundary, or interpolation line for minimum vertical ejection.

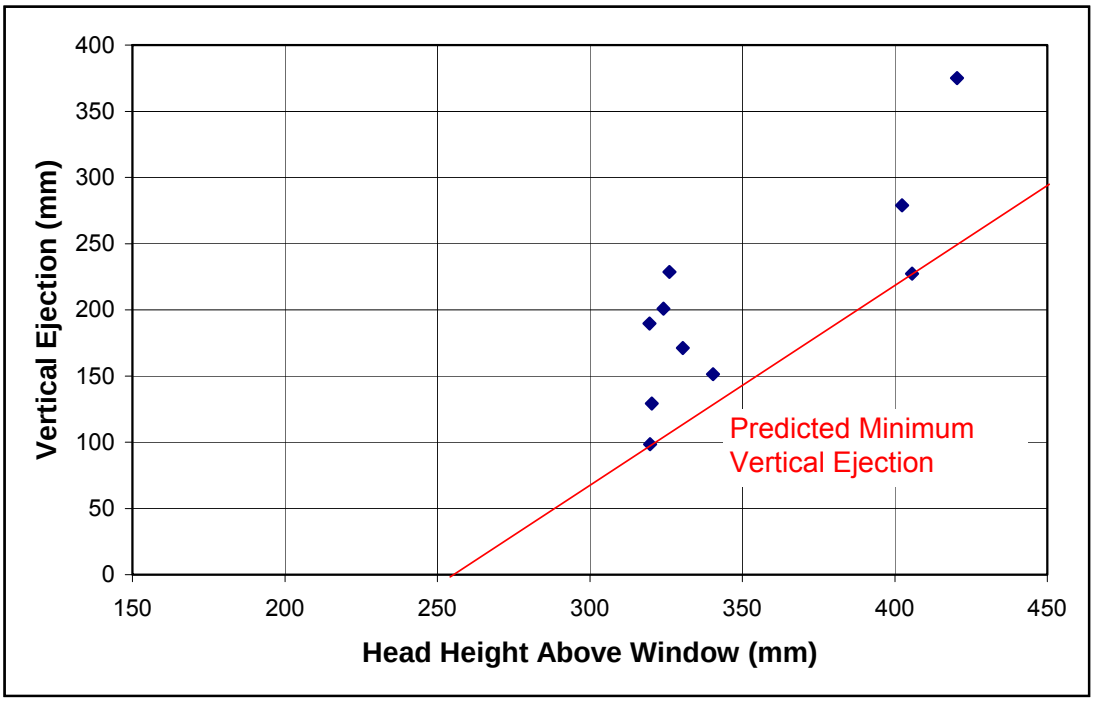

Figure 28. Measured Vertical Ejection Position vs. Head Height and Boundary Line

The maximum lateral ejection and the corresponding vertical position, point (3) in the displacement calculations of Sections 5.3 and 5.4, were used for the interpolation equation because the mid-size vehicles only define the middle portion of the ejection envelope. The upper bound, or return path of the head, is not needed because the full size pickup defines the upper

portion of the envelope. Similarly, lower contours of the head ejection envelope were defined by the small car.

In order to obtain head heights above the windows of mid-size vehicles, a co-worker, Jason Hascall, was measured while sitting in the drivers seat of a wide range of vehicles. Mr. Hascall was chosen because his seated height closely matched that of a 50th percentile male dummy. Measurements for head height, window height, and height to the bottom of the window were recorded for midsized vehicles in showrooms of Chevrolet, Dodge, Ford, Hyundai, Nissan, Honda, and Toyota dealerships. The head height and window height measurements are shown in Figure 29. Each distance was measured five times, and the averages were used to calculate the head height. The original vehicle measurements and the calculated head eights are shown in Table 26.

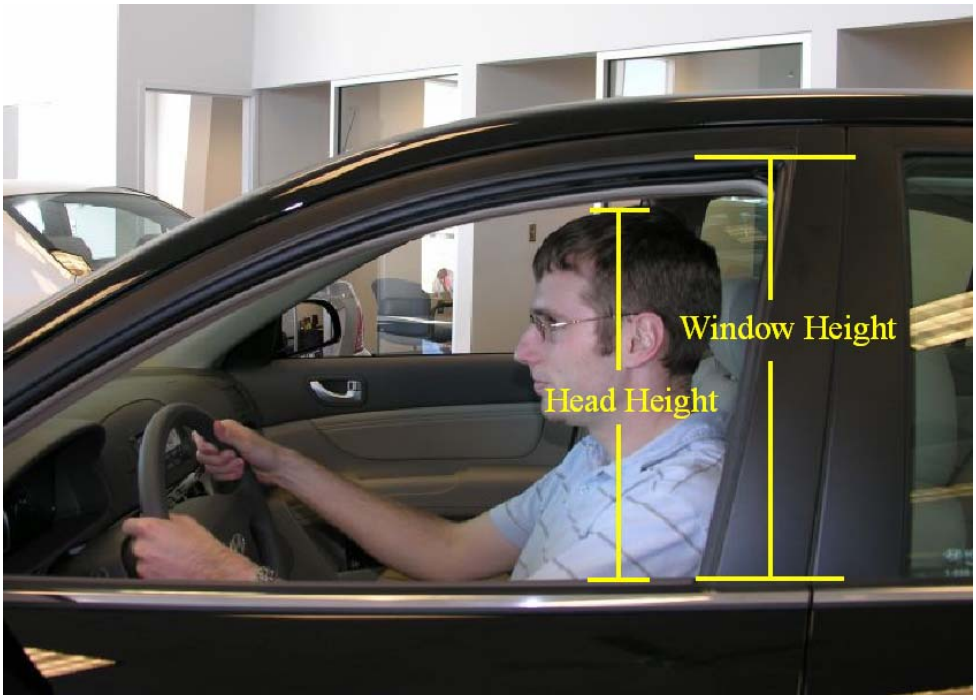

Figure 29. Measurements Taken to Determine Head Height

Table 26. Vehicle Measurements and Head Height Results

Vehicle				Bottom Window Height		Window Height		Head Height Above Bottom of Window	
Year	Make	Model	Type	(mm)	(in.)	(mm)	(in.)	(mm)	(in.)
2006	Mercury	Milan	sedan	990.6	39.0	368.3	14.50	318.4	12.54
2006	Pontiac	Grand Prix	sedan	977.9	38.5	381.0	15.00	293.0	11.53
2005	Dodge	Stratus	sedan	939.8	37.0	381.0	15.00	339.3	13.36
2006	Dodge	Charger	sedan	1041.4	41.0	342.9	13.50	277.3	10.92
2007	Toyota	Camery	sedan	1028.7	40.5	381.0	15.00	299.4	11.79
2006	Toyota	Scion	sedan	1003.3	39.5	349.3	13.75	289.2	11.38
2006	Hyundai	Sonata	sedan	1016.0	40.0	419.1	16.50	346.6	13.65
2006	Nissan	Altima	sedan	977.9	38.5	419.1	16.50	353.8	13.93
2006	Nissan	Maxima	sedan	1003.3	39.5	381.0	15.00	323.1	12.72
2000	Ford	Tarus	sedan	927.1	36.5	425.5	16.75	355.3	13.99
2006	Chevrolet	Cobalt	small car	965.2	38.0	349.3	13.75	326.1	12.84
2006	Dodge	Neon	small car	914.4	36.0	393.7	15.50	341.4	13.44
2006	Hyundai	Elantra	small car	965.2	38.0	419.1	16.50	358.7	14.12
2006	Hyundai	Tibron	small car	965.2	38.0	317.5	12.50	281.4	11.08
2006	Honda	Accord	small car	965.2	38.0	393.7	15.50	334.6	13.17
2006	Honda	Civic	small car	952.5	37.5	387.4	15.25	315.0	12.40
2006	Dodge	Dakota	pickup	1219.2	48.0	425.5	16.75	357.0	14.05
2006	Dodge	Ram	pickup	1358.9	53.5	495.3	19.50	407.4	16.04
2006	Toyota	Tundra	pickup	1320.8	52.0	482.6	19.00	360.4	14.19
2006	Hyundai	Tucson	pickup	1155.7	45.5	444.5	17.50	381.3	15.01
2006	Nissan	Frontier	pickup	1206.5	47.5	469.9	18.50	388.7	15.30
2006	Chevrolet	Silverado	pickup	1308.1	51.5	501.7	19.75	362.8	14.28
2000	Chevrolet	2500	pickup	1282.7	50.5	482.6	19.00	397.9	15.67
2006	Dodge	Durango	SUV	1270.0	50.0	444.5	17.50	357.8	14.09
2006	Toyota	Highlander	SUV	1155.7	45.5	431.8	17.00	335.7	13.22
2006	Toyota	RAV4	SUV	1168.4	46.0	419.1	16.50	341.7	13.45
2006	Honda	Pilot	SUV	1168.4	46.0	489.0	19.25	379.0	14.92
2006	Honda	CR-V	SUV	1104.9	43.5	469.9	18.50	394.6	15.54
2006	Chevrolet	Equinox	SUV	1155.7	45.5	450.9	17.75	344.1	13.55
2006	Chevrolet	Tahoe	SUV	1282.7	50.5	482.6	19.00	388.8	15.31

The calculated head heights for each of the dealership vehicles were then plugged into the linear interpolation equations to find the maximum lateral and minimum vertical ejection displacements. The head heights from the test vehicles in the videos were also entered into the interpolation equations to show worst case scenario and better define the bounds of the head ejection envelope. While the maximum lateral displacement came straight from equation 5.1, the vertical position must be shifted into its proper place. The window height of each vehicle was

added to the predicted vertical ejection from equation 5.2. Then, the predicted vertical movement of the vehicle during impact was subtracted out. Since no crash videos or test data could be found on the vertical movement of a sedan or SUV, the vertical movement found for small cars was applied to sedans and the movement for pickup was applied to SUVs. Thus, every small car and sedan was given a vertical window drop of 12.7 mm (0.5 in.) and every pickup and SUV was given a drop of 57 mm (2.25 in.). Table 27 contains the results for the predicted lateral and vertical head ejection positions.

Figure 30 and Figure 31 contain plots of the predicted maximum head ejection data in SI and English units. The head ejection envelope from Section 5.6 is drawn in blue. Amending this previous shape, a new head ejection envelope is drawn to encompass the predicted ejections of all vehicle classes. The new envelope shape is colored red. The adjusted shape was added to the rest of the head ejection envelope as shown in Figure 32.

Table 27. Predicted Results for Maximum Lateral and Minimum Vertical Ejection

Vehicle		Bottom Window Height		Head Height in Window		Predicted Ejection							
						Lateral		Vertical		Window Drop		Total Vertical	
Year	Model	(mm)	(in.)	(mm)	(in.)	(mm)	(in)	(mm)	(in)	(mm)	(in)	(mm)	(in)
2006	Milan	990.6	39.0	318.4	12.54	147.3	5.80	90.5	3.56	12.7	0.5	1068.4	42.06
2006	Grand Prix	977.9	38.5	293.0	11.53	113.8	4.48	50.5	1.99	12.7	0.5	1015.7	39.99
2005	Stratus	939.8	37.0	339.3	13.36	174.8	6.88	123.2	4.85	12.7	0.5	1050.3	41.35
2006	Charger	1041.4	41.0	277.3	10.92	93.2	3.67	25.9	1.02	12.7	0.5	1054.6	41.52
2007	Camery	1028.7	40.5	299.4	11.79	122.3	4.81	60.5	2.38	12.7	0.5	1076.5	42.38
2006	Scion	1003.3	39.5	289.2	11.38	108.8	4.28	44.5	1.75	12.7	0.5	1035.1	40.75
2006	Sonata	1016.0	40.0	346.6	13.65	184.4	7.26	134.6	5.30	12.7	0.5	1137.9	44.80
2006	Altima	977.9	38.5	353.8	13.93	193.9	7.63	146.0	5.75	12.7	0.5	1111.2	43.75
2006	Maxima	1003.3	39.5	323.1	12.72	153.5	6.04	97.8	3.85	12.7	0.5	1088.4	42.85
2000	Tarus	927.1	36.5	355.3	13.99	195.8	7.71	148.2	5.84	12.7	0.5	1062.6	41.84
2006	Cobalt	965.2	38.0	326.1	12.84	157.5	6.20	102.6	4.04	12.7	0.5	1055.1	41.54
2006	Neon	914.4	36.0	341.4	13.44	177.5	6.99	126.5	4.98	12.7	0.5	1028.2	40.48
2006	Elantra	965.2	38.0	358.7	14.12	200.2	7.88	153.6	6.05	12.7	0.5	1106.1	43.55
2006	Tibron	965.2	38.0	281.4	11.08	98.5	3.88	32.2	1.27	12.7	0.5	984.7	38.77
2006	Accord	965.2	38.0	334.6	13.17	168.6	6.64	115.9	4.56	12.7	0.5	1068.4	42.06
2006	Civic	952.5	37.5	315.0	12.40	142.8	5.62	85.0	3.35	12.7	0.5	1024.8	40.35
2006	Dakota	1219.2	48.0	357.0	14.05	198.0	7.80	150.9	5.94	57.2	2.25	1313.0	51.69
2006	Ram	1358.9	53.5	407.4	16.04	264.4	10.41	230.1	9.06	57.2	2.25	1531.9	60.31
2006	Tundra	1320.8	52.0	360.4	14.19	202.5	7.97	156.3	6.15	57.2	2.25	1420.0	55.90
2006	Tucson	1155.7	45.5	381.3	15.01	230.1	9.06	189.2	7.45	57.2	2.25	1287.7	50.70
2006	Frontier	1206.5	47.5	388.7	15.30	239.8	9.44	200.7	7.90	57.2	2.25	1350.1	53.15
2006	Silverado	1308.1	51.5	362.8	14.28	205.7	8.10	160.0	6.30	57.2	2.25	1411.0	55.55
2000	2500	1282.7	50.5	397.9	15.67	251.9	9.92	215.2	8.47	57.2	2.25	1440.7	56.72
2006	Durango	1270.0	50.0	357.8	14.09	199.1	7.84	152.3	5.99	57.2	2.25	1365.1	53.74
2006	Highlander	1155.7	45.5	335.7	13.22	170.1	6.70	117.6	4.63	57.2	2.25	1216.2	47.88
2006	RAV4	1168.4	46.0	341.7	13.45	178.0	7.01	127.0	5.00	57.2	2.25	1238.3	48.75
2006	Pilot	1168.4	46.0	379.0	14.92	227.0	8.94	185.6	7.31	57.2	2.25	1296.8	51.06
2006	CR-V	1104.9	43.5	394.6	15.54	247.6	9.75	210.1	8.27	57.2	2.25	1257.8	49.52
2006	Equinox	1155.7	45.5	344.1	13.55	181.1	7.13	130.8	5.15	57.2	2.25	1229.3	48.40
2006	Tahoe	1282.7	50.5	388.8	15.31	240.0	9.45	201.0	7.91	57.2	2.25	1426.5	56.16
1993	Festiva	896.6	35.3	323.6	12.74	154.1	6.07	98.6	3.88	12.7	0.5	982.5	38.68
1993	Festiva	894.1	35.2	320.3	12.61	149.8	5.90	93.4	3.68	12.7	0.5	974.7	38.38
1994	Metro	924.6	36.4	330.5	13.01	163.1	6.42	109.3	4.30	12.7	0.5	1021.2	40.20
1990	Tercel	894.1	35.2	319.5	12.58	148.8	5.86	92.2	3.63	12.7	0.5	973.6	38.33
1984	Civic	889.0	35.0	326.1	12.84	157.5	6.20	102.5	4.04	12.7	0.5	978.8	38.54
1992	Metro	927.1	36.5	340.4	13.40	176.2	6.94	124.9	4.92	12.7	0.5	1039.3	40.92
1993	Metro	889.0	35.0	324.1	12.76	154.8	6.09	99.3	3.91	12.7	0.5	975.6	38.41
1994	2500	1295.4	51.0	402.3	15.84	257.7	10.15	222.1	8.75	57.2	2.25	1460.4	57.50
1995	2500	1244.6	49.0	420.4	16.55	275.4	11.04	250.5	9.86	57.2	2.25	1437.9	56.61
1995	2500	1267.5	49.9	405.6	15.97	262.0	10.32	227.3	8.95	57.2	2.25	1437.6	56.60

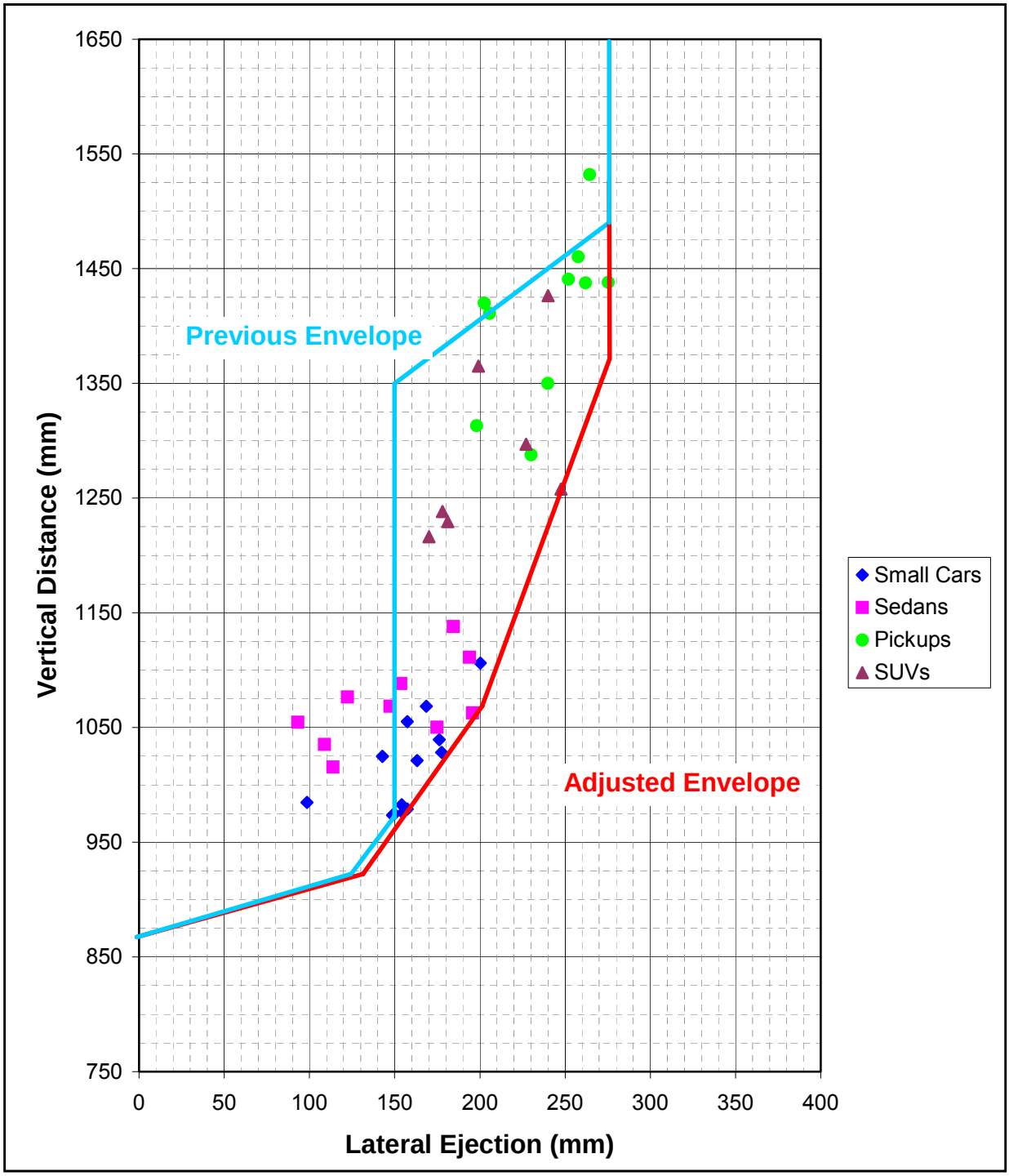

Figure 30. Predicted Maximum Ejections and the Adjusted Envelope (SI)

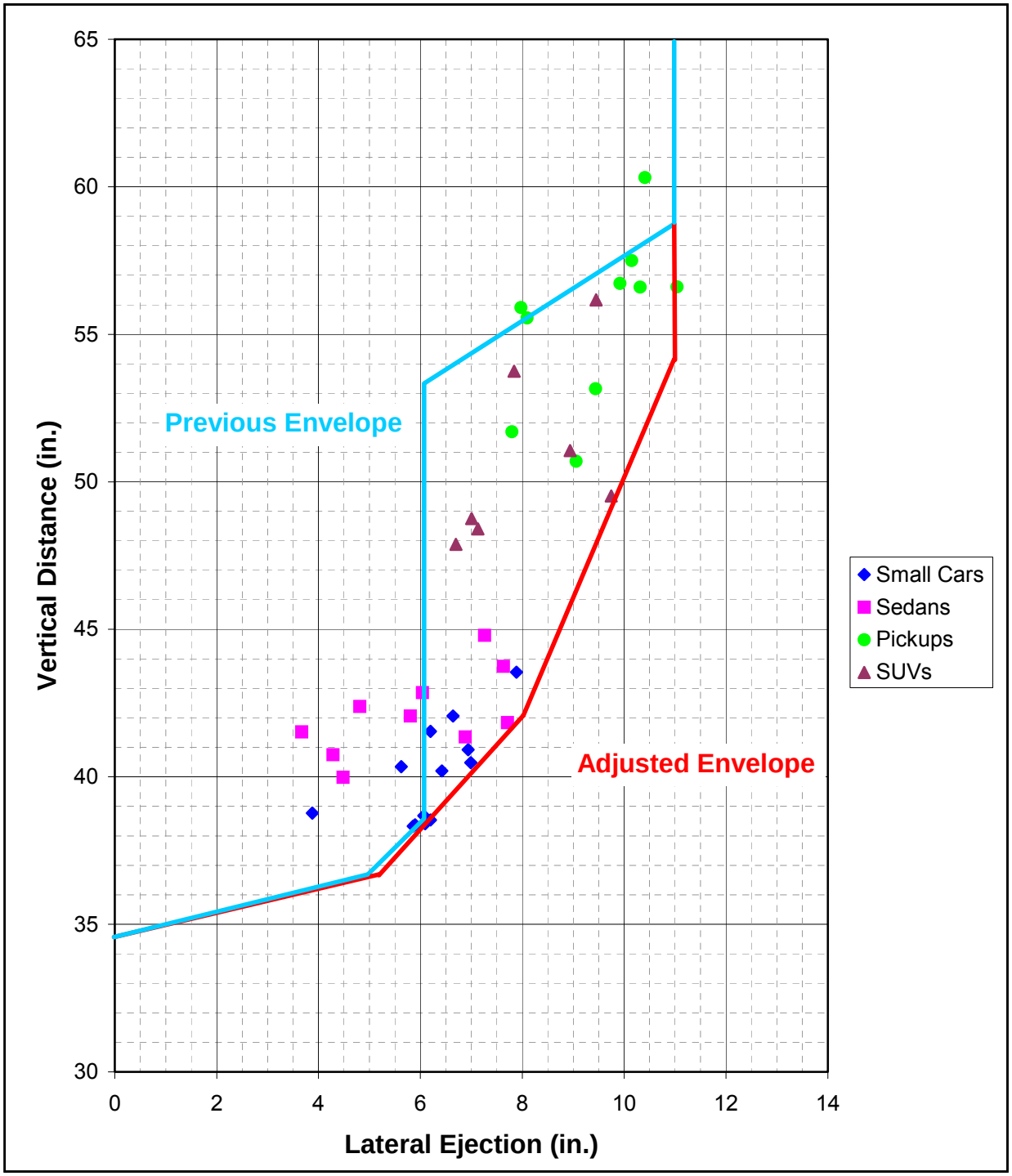

Figure 31. Predicted Maximum Ejections and the Adjusted Envelope (English)

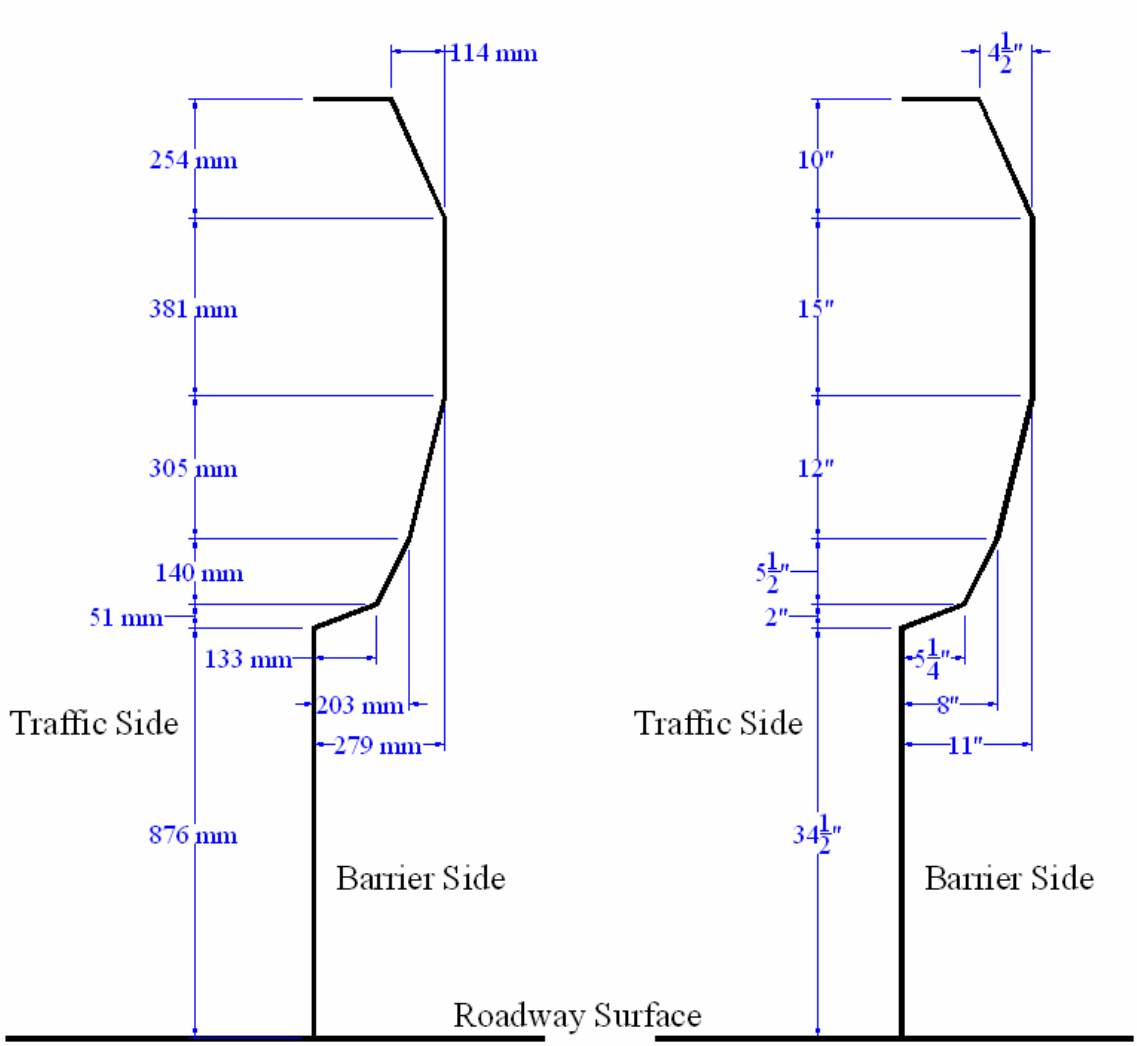

Figure 32. Head Ejection Envelope and Dimensions

5.8 Uses and Limitations of the Head Ejection Envelope

The head ejection envelope was designed as a template for longitudinal barriers with the goal of eliminating head slap. The envelope was created on a plane through the barrier cross section, or normal to the barrier face, and applies along the entire length of a longitudinal barrier.

In order to prevent head slap, all barrier cross-sectional elements and attachments should meet the geometric design restraints set by the envelope.

The head ejection envelope geometry shown in Figure 32 directly applies only to rigid barriers with a vertical or near vertical face. Semi-rigid or flexible barriers deform during impact and thereby reduce vehicle decelerations. Thus, the ejection envelope developed herein does not apply. Also, safety-shaped and single-sloped barriers allow an impact vehicle to climb and cause it to roll away from the barrier. Thereby, the head ejection envelope is not applicable to these barrier shapes.

The head ejection envelope also has limitations on who it applies to. The envelope was designed for belted occupants only. An occupant not wearing a seatbelt runs the risk of being completely ejected from a vehicle during impact. Further, the head ejection envelope was designed using measurements from the Hybrid III 50th percentile male dummy. Any person sitting higher than this in a vehicle is subject to having larger head ejection displacements than predicted by this envelope.

If desired, alterations can be made to the ejection envelope in order for it to encompass taller occupants. The same process described in Section 5.7 can be used to predict the extent of ejection with one extra step. The difference in seated height between a taller occupant to the Hybrid III 50th percentile male dummy should be added to the head height measured in each window before the linear interpolation equation are used to predict the lateral and vertical ejections. Finally, the upper bound of the envelope should be raised a distance equivalent to the difference in seated heights.

6 BARRIER SHAPE DESIGN

6.1 Barrier Height

The design height of a barrier can simply be based off the height to the center of gravity of the impacting vehicle. Making the barrier taller than the vehicle's center of gravity ensures the vehicle can be redirected by a force acting horizontally through the center of gravity. This is usually the case for longitudinal barriers designed for restraining passenger vehicles. NCHRP Report 350 lists the center of gravity for the 820C and 2000P test vehicles as 551 mm (21.7 in.) and 701 mm (27.6 in.) respectively. Therefore, a barrier with a height of 711 mm (28 in.) or greater should be capable of redirecting both of these passenger vehicles.

A problem arises when applying this approach to tractor trailer impacts. The center of gravity for heavy trucks is much higher than most traffic barriers. For example, NCHRP Report 350 recommends that the center of gravity height for the heavy truck ballast to be 1,849 mm (72.8 in.). However, full-scale crash testing has shown that barriers lower than the center of gravity height can safely redirect a test vehicle. The lower barrier heights are possible because the top of the barrier applies a vertical, stabilizing force to the bottom of the truck box as the truck box rolls onto the top of the barrier. The vertical force keeps the box upright and prevents it from rolling over the top of the barrier, while the horizontal forces applied to the truck tires redirect the vehicle. Thus, a TL-5 barrier must only be tall enough to apply a vertical force to the box, not the height of the center of gravity. Figure 33 illustrates these forces during an impact between a tractor trailer and a rigid concrete wall.

Figure 33. Forces Acting on a Tractor Trailer during Impact.

The minimum barrier height deemed necessary to contain and redirect a tractor van-trailer was determined from previous TL-5 barrier systems. Table 28 contains a list of previous successful TL-5 full-scale crash tests meeting the NCHRP Report 350 requirements. The lowest barrier height from a successful TL-5 crash test was 1,067 mm (42 in.). This height has been proven adequate by four crash tests that have passed under NCHRP Report 350 TL-5 conditions. An 813 mm (32 in.) tall New Jersey shaped barrier was impacted under TL-5 conditions, but the barrier height was inadequate and the tractor trailer rolled over the top [24]. Therefore, the design height for the new TL-5 barrier was determined to be 1,067 mm (42 in.).

Table 28. List of Previous Successful Tractor Trailer Crash Tests.

Test	Ref No.	Tractor Trailer Weight		Impact Conditions			Barrier Description	Barrier Height	
				Speed		Angle (deg)			
		(kg)	(lbs)	(km/h)	(mph)			(mm)	(in.)
4798-13	19	36,369	80,180	83.8	52.1	16.5	New Jersey Shape Median	1067	42
7162-1	20	36,287	80,000	79.8	49.6	15.1	New Jersey Shape Median	1067	42
2416-1	22	36,324	80,080	77.9	48.4	14.5	New Jersey Shape with Metal Rail	1270	50
6	23	36,183	79,770	79.0	49.1	15	Open Concrete Rail with Metal Rail	1372	54
405511-2	21	36,000	79,366	80.1	49.8	14.5	Vertical Bridge Rail	1067	42
7046-3	15	36,324	80,080	88.5	55	15.3	Instrumented Vertical Wall	2286	90
ACBR-1	13	35,822	78,975	79.5	49.4	16.3	Open Concrete Bridge Rail	1067	42

6.2 Barrier Face Geometry

Passenger vehicle stability and impact forces associated with each of the five major barrier shapes; New Jersey shape, F-shape, single-slope, vertical, and open concrete rail; were examined in Chapter 4. Vertical-shaped barriers and open concrete rails both created the least amount of vehicle climb and roll to minimize the possibility for a rollover crash. Although the vertical-faced barriers showed increased peak force levels compared to the other shapes, the occupant impact velocities and occupant ridedown decelerations were still below the NCHRP Report 350 thresholds. Therefore, a vertical face was selected as the optimum barrier shape to safely redirect passenger vehicles (see Chapter 4 for details).

Table 28 from Section 6.1 contains multiple tests in which a tractor trailer was successfully redirected with a vertical face barrier. Test no. ACBR-1 was performed on an open concrete bridge rail with an indented top [13], while test no. 405511-2 was completed using a vertical face bridge rail [21]. Both of these 1067 mm (42 in.) tall barriers passed the NCHRP Report 350 evaluation criteria and validate the choice of a vertical face for the geometric design of the new TL-5 barrier.

Head slap from passenger vehicles was also considered when designing the barrier geometry. Since this barrier design was expected to be over 864 mm (34 in.) tall, the head ejection envelope created in Chapter 5 must be utilized. The head ejection envelope was placed adjacent to the face of the barrier and used as a template with which to design the top of the barrier. Multiple concepts for the barrier face shape were then identified within the head ejection envelope. Those design options are illustrated in Figure 34.

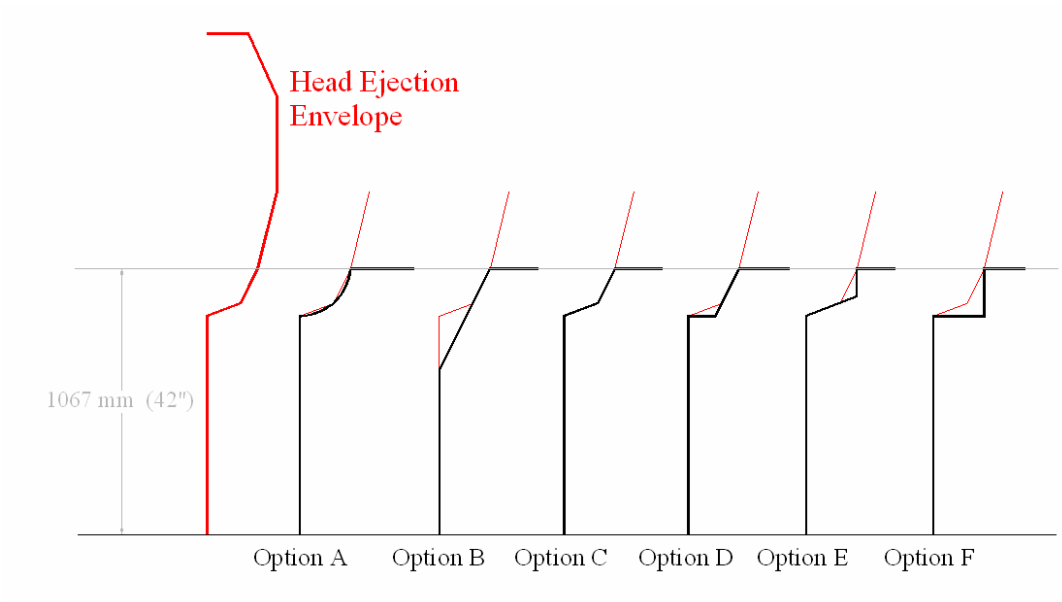

Figure 34. Barrier Face Geometry Options.

The design options were then evaluated, critiqued, and eliminated until only one remained. The curved indentation of Option A was considered too difficult to keep consistent in formwork and was, therefore, ejected. Options D, E, and F contained sharp 90 degree corners between vertical and horizontal surfaces which may be difficult to completely fill with concrete, thus leaving voids in the barrier. These three were also believed to be less aesthetical appealing

and were, therefore, discarded. Finally, the higher initial vertical face of Option C was more favorable for vehicle stability than Option B. Based upon this reasoning, Option C was selected as the barrier face shape for use in this study.

The final barrier geometry was set by adjusting the general shape of Option C to be inside the head ejection envelope and rounding dimensions to whole numbered English dimensions. This modification was made by lowering the shallow slope after the first break point by one-half inch. This is a conservative design for head ejection and allows for some tolerance in vertical barrier placement during construction. The final barrier face geometry is dimensioned and displayed in Figure 35. Note the width of the barrier is not dimensioned because it was optimized based upon reinforcing steel requirements presented in Chapter 7.

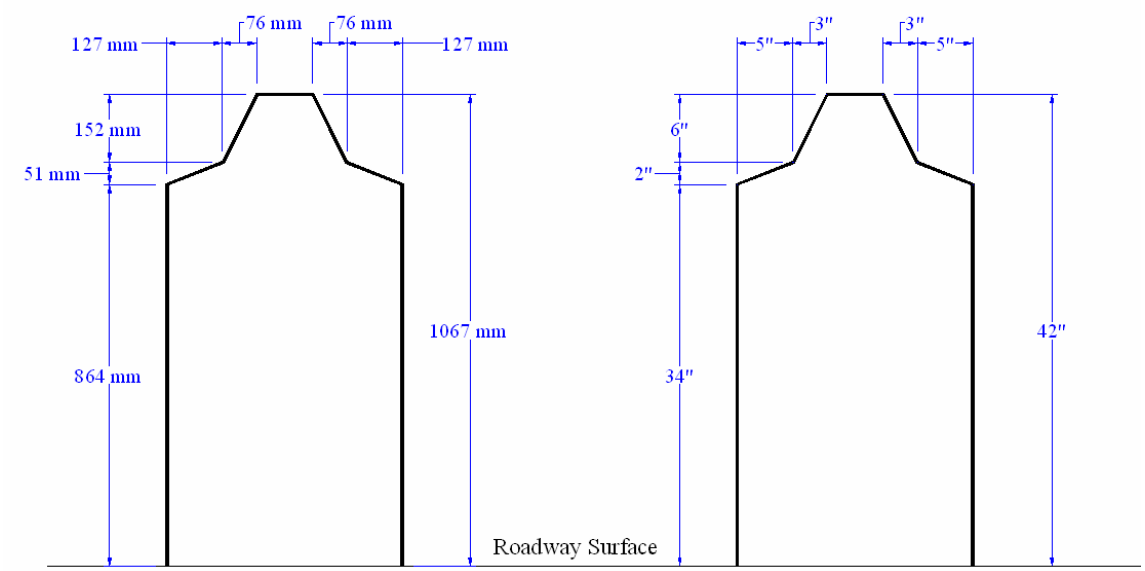

Figure 35. Barrier Face Geometry

6.3 Longitudinal Asperities Option

Aesthetic additions to the barrier face geometry can be made in the form of longitudinal asperities. Asperities are neither critical structural features nor mandatory additions. Instead asperities are used as aesthetic enhancements of the barrier geometry. The plain flat face can be altered by adding a number of different protrusions, notches, or grooves to increase the barrier's visual appeal. A few examples of possible longitudinal asperity options are illustrated in Figure 36.

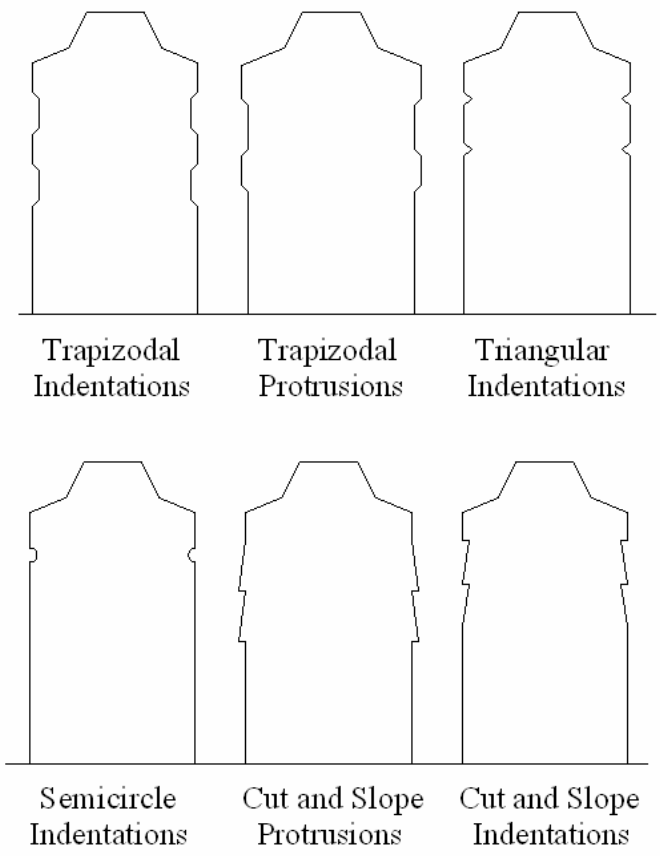

Figure 36. Possible Longitudinal Asperity Options for the Barrier Face

As shown in Figure 36, asperities can be protrusions or indentations to the barrier face. However, the first break point on the top of the vertical face must not be moved inward. This point represents the beginning and base point of the head ejection envelope. If the top of the barrier is set back, impacting vehicles may be allowed to roll farther into the barrier and allow an occupant's head to strike the barrier. Therefore, any indentations in the barrier face must be added below the top of the barrier face. Protrusion asperities, on the other hand, can be added anywhere including the top of the face. Also, asperities of all types should not be added to the top narrow protrusion of the barrier. Adding more detail to this small portion would make construction of the barrier much more difficult.

A lower limit also exists for the placement of any asperity type. If an asperity was located near the base of the barrier, it could create a mechanism for tires to climb the barrier face with an increased risk of rollover. Therefore, all asperities should be located on the upper portion of the barrier face, or above the middle of the impacting vehicle's tire. Pickup truck tire diameters are routinely measured around 762 mm (30 in.), so asperities must be at least 381 mm (15 in.) above the roadway surface.

Longitudinal asperities placed on the upper half of the barrier can actually help prevent vehicle climb during impact. Protrusions on the barrier face indent the vehicle sheet metal, while indentations can allow vehicle sheet metal to intrude into the openings. Hence, asperities can interlock with vehicle sheet metal and resist any vertical movement. Thus, asperities not only provide visual appeal, but can also serve as a mechanism preventing vehicle climb.

6.4 Geometric Alterations for Slipforming

Most median barriers today are being constructed without the use of conventional forms and are instead being slipformed. Slipforming is a process by which a machine casts concrete into a desired cross-sectional shape as it slowly travels down the roadway. The resulting product is a smooth, monolithic structure built without the need to set or tear down conventional forms. Consequently, slipforming greatly reduces labor requirements associated with constructing conventional formwork.

Contractors and engineers from across the nation who regularly work with slipforming safety barriers were surveyed regarding the constructability of the chosen barrier geometry. Contractor recommendations were compiled and used to modify the barrier geometry where necessary. The contractor's biggest concerns dealt with the vertical face. Wet concrete does not maintain a perfect shape through the curing process without the use of fixed forms. Even with the drier mixes used for slipforming, some degree of slump is always present. As such, a perfectly vertical face is very difficult to construct, especially the proposed 864-mm (34-in.) high vertical face. Therefore, the barrier face needed to be given a slight batter, or slope, in order for slipforming to become practical. Some contractors used a rule of 1 mm of batter for every 12 mm, while others used a similar 1/24 limit. The 1/24 batter has been successfully used in many barrier construction projects, so it is possible to slipform. However, in recognition that some contractors expressed a concern this slope may raise costs, a batter of 1/18 was determined by splitting the middle of these two design rules.

A 1/18 slope equates to a 3.2 degree angle from vertical. This angle is less than one third of the angles normally used for single-slope barriers: 9.8 and 11.2 degrees. A small amount of

vehicle climb and roll can be foreseen with a 1/18 slope, but these values should be a small fraction of the climb and roll associated with single-slope barriers. It is then expected that vehicle behavior during impacts will be closer to results seen from vertical-shape barriers than those of single-slope barriers. Vehicle stability should remain near the optimized levels of vertical-shape barriers.

Because little or no climb is expected from the new barrier face, the head ejection envelope was not shifted vertically. The horizontal position of the envelope was based off the side of the vehicle, and window base, being in direct contact with the barrier face. This remains unchanged and the minimal amount of additional roll was not expected to alter the envelope shape. The ejection envelope remains applicable, and the top geometry was recommended to be unchanged to preserve the head ejection envelope design limits beginning at the top of the barrier face. Thus, the 1/18 slope was added to the barrier face by moving the bottom of the barrier outward by 48 mm (1.9 in.) on each side.

The only adjustment made to the top geometry dealt with the interior angle. This angle drew concerns because it left no room for tolerance in the design. Any slight mishap or deviance from a perfectly straight line would adversely affect barrier aesthetics. This especially holds for any hand finishing required to fill voids in the barrier. Subsequently, the sharp angle was replaced with a 3 inch radius to eliminate this concern. Figure 37 depicts the barrier geometry amended for slipforming. If conventional forms are to be used during cast in place construction, the barrier geometry can remain as shown in Figure 35.

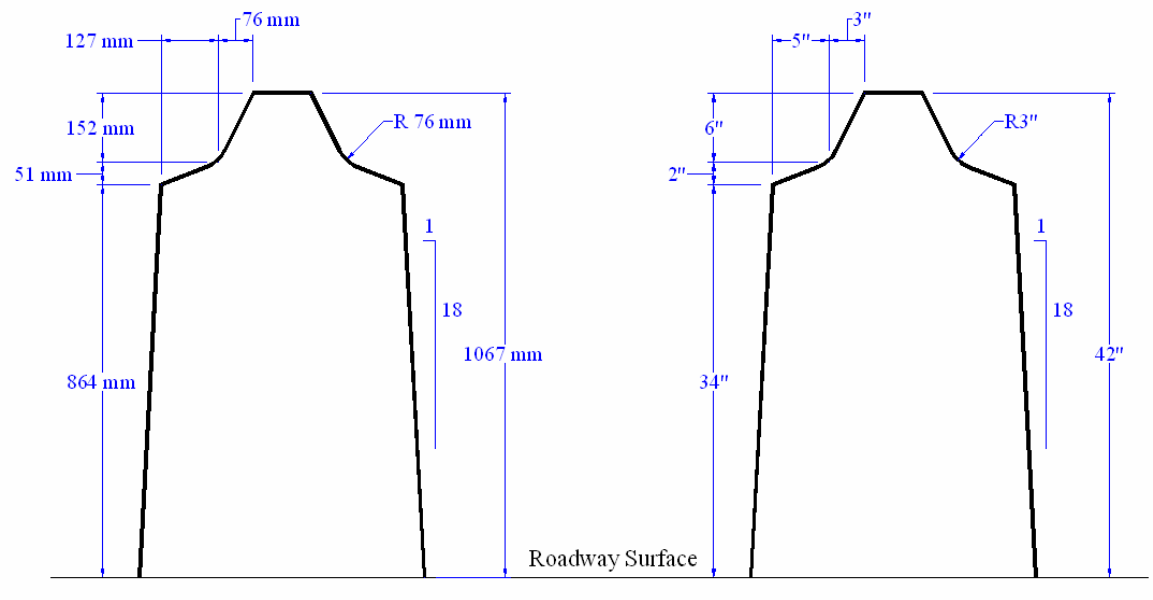

Figure 37. Barrier Geometry after Slipforming Alterations.

Recommendations were also received from contractors regarding the longitudinal asperities. Recessed asperities were preferred because of the added cost of creating protrusions in the forms. Intruding asperities can be established by adding elements inside a basic form. As a result, the same form could be used on multiple projects with different asperities or no asperities at all.

Also, the size of longitudinal asperities should be limited. Contractors had expressed concerns that large asperities can cause concrete slumping and result in a poor looking product, and therefore, preferred deviations smaller than 25 mm (1 in.). The same distance, 25 mm (1 in.), is the allowable recession to the barrier face before the required clear cover is violated. Thus, 25 mm (1 in.) was established as the maximum deviation from the original barrier face for

all longitudinal asperities. This means intrusions must be a maximum of one inch deep and protrusions must be a maximum of one inch out from the face.

Aesthetic treatments outside of longitudinal asperities can result in a varying barrier cross-sectional geometry. Examples of such barrier treatments include texturing or vertical asperities and are illustrated in Figure 38. By using conventional forms or special slipforming techniques, these aesthetic treatments can be added to the barrier face. However, texturing patterns must conform to the recommendations by White et al. [38] and asperities other than longitudinal grooves or protrusions must conform to the limitations set by Bullard et al. in NCHRP Report 554 [79].

Figure 38. Examples of Texturing [38] and Vertical Asperities [79]

7 BARRIER REINFORCEMENT DESIGN

7.1 Introduction

Many barrier design options, including rebar size, stirrup spacing, number of longitudinal bars, and barrier width, affect both the strength and the cost of the barrier. The goal of this chapter is to optimize these factors into one barrier design. The final barrier configuration should provide adequate structural capacity and provide a TL-5 barrier at the lowest possible cost. The individual steps needed to accomplish this goal are listed below:

- determine basic shape of internal steel;
- determine the anchorage system for the barrier;
- identify longitudinal steel, stirrup, and barrier width possibilities and associated costs of each;
- identify method for calculating barrier strength capacity;
- define the barrier design requirements; and
- optimize the barrier configuration.

7.2 Shape of Steel Reinforcement

Before the steel reinforcement could be optimized, the general shape of the reinforcement had to be determined. Longitudinal steel was always considered necessary, but stirrups were questionable. Some barriers are reinforced using only longitudinal steel, while other designs require stirrups. The necessity of stirrups was evaluated along with possible design shapes of the stirrups. Different methods to anchor the barrier to the ground were also examined in the search to finalize the general shape of internal steel reinforcement.

7.2.1 Stirrup Use Decision

Longitudinal steel only designs feed the steel rebar directly into the slipform machine during the placement of the barrier's concrete. This method has two distinct advantages. Time and material are reduced by eliminating the need for stirrups and the labor necessary to bend rebar. Second, the placement of the longitudinal steel is more precise when feeding it directly into the slipform mold. The mold contains specific holes on the front side in which to feed the rebar and, thus, ensuring proper placement of the steel. Even if the slipform shifts laterally from its intended position, the rebar will still be in the correct position inside the barrier.

This method of slipforming does have its limitations though. Immediately after concrete placement, the rebar is 'floating' in the concrete. As a result, heavy bars can sink or shift downward through the concrete matrix before it has time to harden. Therefore, only small rebar sizes are recommended when stirrups are absent. Slipforming small radius barrier curves can also create problems. Casting straight rebar into a curved barrier may result in the rebar resisting the bend, attempting to straighten itself, and puncturing out of the barrier sides. Further, transverse steel is needed to resist slumping of the concrete and help maintain the vertical integrity of the barrier. This is especially true for tall barriers or barriers with steep sides.

The use of stirrups within the overall barrier reinforcement configuration helps to reduce these problems. Stirrups prevent the movement of rebar during the slipforming process and keep the barrier shape intact by resisting concrete slump. The barrier geometry selected in Chapter 6 consists of 864 mm (34 in.) high near-vertical barrier faces. As such, prevention of concrete slump is a very important design consideration. Also, stirrups provide torsion resistance and

resistance to overturning. This additional strength may prove to be necessary in redirecting a tractor trailer truck under the NCHRP Report 350 test conditions. Finally, a stirrup design can be cast using either slipforming or conventional forms. For all of these reasons, it was decided to incorporate stirrups into the barrier reinforcement design.

7.2.2 General Stirrup Shape

Multiple stirrup shape possibilities were explored in order to determine the best design by function and practicality. Figure 39 illustrates some of these designs. Although not shown on the drawings, all options incorporate a loop at the bottom to connect the stirrups. Stirrup options shown in Figure 39 were evaluated on simplicity and functionality in search of the best shape. Option A was considered too complex of a shape to be easily bent and was therefore dropped from consideration. Both the vertical and sloped versions of D failed to fill all parts of the barrier cross section. The vertical D did not support the top, while the sloped D pulled too far away from the barrier face. These designs were subsequently eliminated. Due to the discontinuity at the top of the stirrup, option C could not carry load from one side to the other. Thus, the B designs were selected as the best stirrup configuration concept.

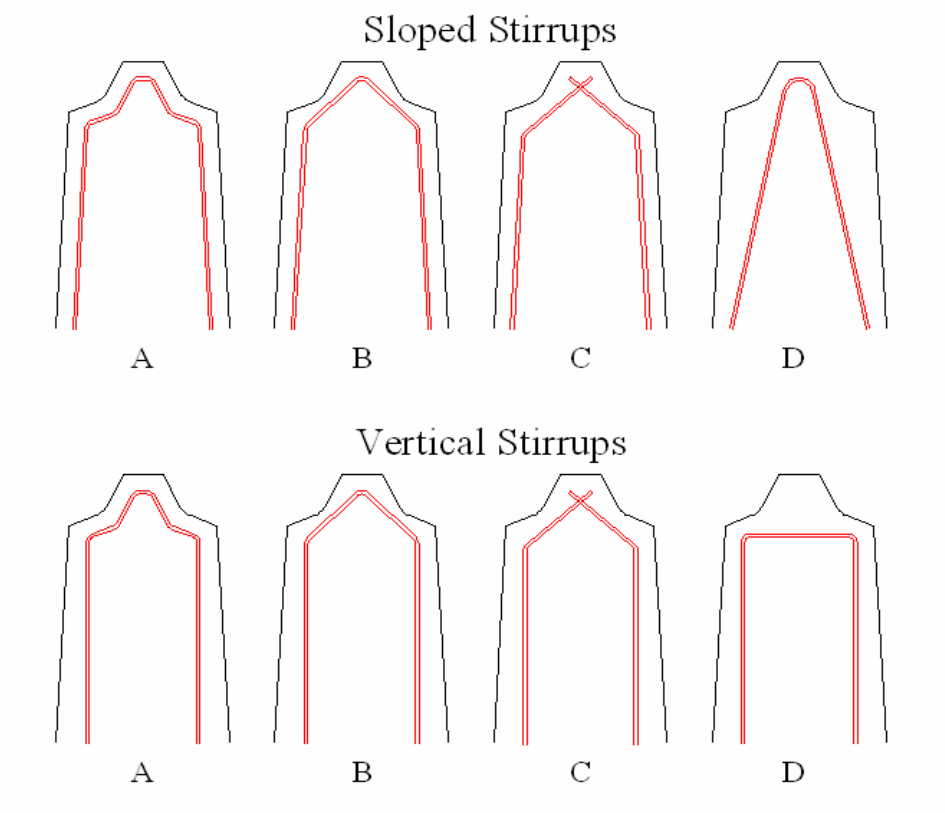

Figure 39. Stirrup Shape Possibilities Explored

Sloped stirrups made to match the slope of the barrier face would provide better resistance to concrete slumping and better hold the barrier shape compared to vertical stirrups. Also, bending rebar into stirrups that match the barrier slope is not any more difficult than if the stirrup sides were vertical. Therefore, the sloped option B was selected for the stirrup design.

The actual dimensions of the stirrup is dependant on the bar size and barrier width. Both of these also affect the strength and construction costs presented in Section 7.6. Thus, the final size and set of dimensions could not be predetermined. The specific dimensions for stirrups as a function of bar size and barrier width are presented in Section 7.3.2.

The placement of a stirrup, however, must follow a set of basic guidelines regardless of bar size and barrier width. Discussions with slipform contractors concluded that a 64 mm (2.5 in.) clear cover for the stirrups would be advantageous. Although 38 to 51 mm (1.5 to 2 in.) of clear cover is normally considered necessary to slipform a barrier, more cover creates an easier pouring operation. Thus, a clear cover of 64 mm (2.5 in.) was set to provide more tolerance room for the contractors. This amount of concrete cover also leaves room for possible asperities to be added, as discussed in Chapter 6. Intruding asperities added to the barrier face at the maximum depth of 25 mm (1 in.) would still have at least 38 mm (1.5 in.) of clear cover, the minimum cover needed for slipforming.

The top of the barrier was allowed a slightly smaller clear cover of only 51 mm (2 in.) but still satisfied the values recommended by contractors. The cover requirements for the top were lowed for two reasons. First, the stirrups could reach farther into the top protrusion of the barrier with a smaller amount of cover. Providing reinforcement in this area was a priority in order to hold the barrier shape during slipforming and also to prevent the top from being broken during impacts. Second, asperities should not be added to the top portion of the barrier, so additional cover was not necessary.

7.2.3 General Anchorage Design

To anchor concrete barriers to the ground, two different methods are popularly used for barriers with internal reinforcement cages, i.e. the stirrups and longitudinal reinforcement. For one system, the stirrups are extended out of the barrier and cast directly into a base slab or footer. The bottoms of the stirrups are cast in the base slab, or footer, leaving the top of the cage

extending upward. After the rigid base has hardened, the barrier is cast over the exposed reinforcement to complete the barrier.

In the second anchorage method, the internal steel cage is made freestanding without direct ties to the base slab. The freestanding cages are held in place during slipforming using dowel bars. Asphalt is also often poured on both sides of the barrier to resist lateral movement. These two methods are illustrated in Figure 40.

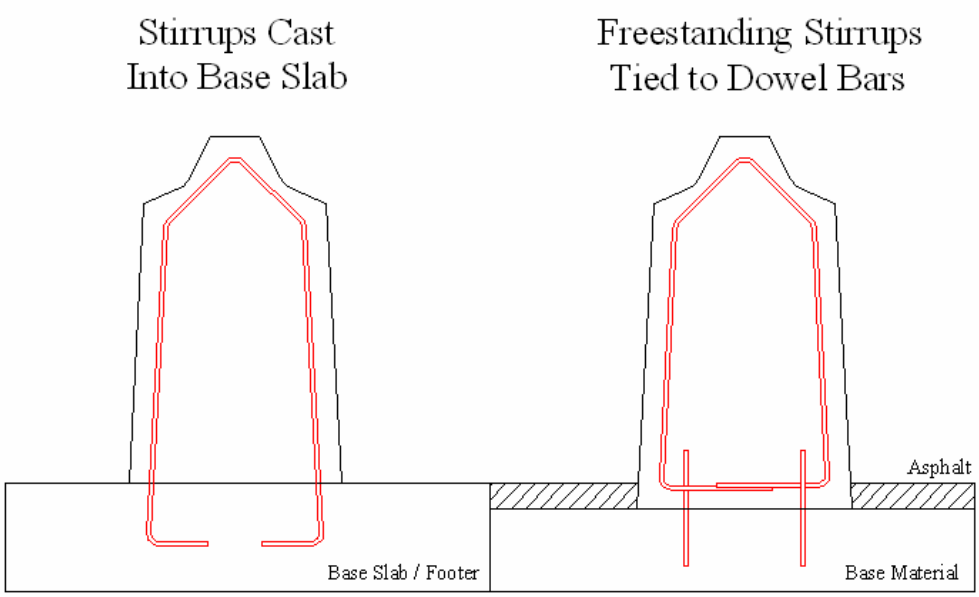

Figure 40. Anchorages of Freestanding Cage vs. Stirrups Cast into Base Slab

Anchoring the barrier with stirrups cast directly into a rigid substructure provides the strongest system because it provides continuity of the internal steel. As long as the development length of the stirrup rebar is satisfied, the barrier will resist overturning and lateral movement with the full strength of the rebar. Also, this anchorage design is easier to slipform over due to

the rigidity of the rebar cage. With the bottom of the rebar cage cast into a rigid substructure, the cage itself becomes fixed in position and movement during slipforming is prevented.

The use of a freestanding cage has its benefits as well. First, the cages can be assembled at any location and moved into position when the barrier is ready to be poured. The cages may be mass produced off site to minimize costs. Also, a barrier made with a free standing cage can be placed over any pre-existing surface, slab, or footer. Holes would be drilled into the substructure so that dowel bars can be inserted and even fastened with epoxy if desired. Alternatively, dowels can be inserted directly into stabilizing soil to eliminate the need for a slot. The asphalt keyway can also be easily applied to any median or shoulder surface to complete the barrier.

Typically, 76 mm (3 in.) of asphalt is used for the keyway. Thus, the barrier must be initially cast at a height of 1,143 mm (45 in.) in order for it to stand 1,067 (42 in.) above the roadway after the asphalt is installed. The taller shape is produced by extending only the base of the barrier. No changes to the barrier face and top geometry is recommended.

Anchoring with the use of dowel bars and an asphalt keyway is not as strong as casting the stirrups directly in a substructure. The asphalt should resist any lateral movement of the barrier, but the ability of the dowel bars to develop resistance to overturning remains questionable. The dowel bars are essentially used to hold the freestanding cage in position for slipforming operation and are normally only used at the quarter points along the length of each cage. This makes estimating the overturning resistance of the barrier somewhat challenging.

Since both of these anchorage systems are used, the new barrier was designed to accommodate both types. The anchoring of freestanding cages with dowel bars and asphalt has

been shown to be a weaker system, so the primary design was focused on this anchorage system. As long as the freestanding cage passes all the design requirements and tests, adapting the design to a cage cast directly in with the substructure should be satisfactory. As such, the optimization of the internal steel in Section 7.6 was completed for the free standing cage, and the prescribed full-scale crash test was conducted on this anchorage system.

7.3 Barrier Optimization Factors

The goal of this chapter was to find the combination of barrier component sizes and dimensions that minimize cost, while satisfying the strength limits needed to redirect a tractor trailer under NCHRP Report 350 impact conditions. The barrier design parameters used in this analysis included the barrier width, the longitudinal rebar, and the stirrup rebar. Practical limitations were identified for each of these variable components, and an associated cost for each of the components was calculated in preparation for the total barrier cost optimization calculations.

7.3.1 Barrier Width

Varying the barrier width affects both the bending strength and the overturning strength. However, widening the barrier adds cost to the barrier through the extra concrete needed to fill the cross section. The barrier optimization analysis was designed to balance these effects.

The barrier face geometry was set in Chapter 6, leaving only the width of the top protrusion of the barrier to define the final cross section. Possibilities for the top width were limited to between 102 mm and 204 mm (4 and 8 in.). Any width smaller than 102 mm (4 in.)

would prevent internal steel from fitting in the top of the barrier due to the clear clover restraints. Also, narrow top widths are susceptible to being completely separated from the barrier during an impact. A maximum of 204 mm (8 in.) was set because early calculations showed a barrier with a 204 mm (8 in.) top would provide strengths much greater than needed. Thus, the width of barrier top was varied from 102 to 204 mm (4 to 8 in.) in 25 mm (1 in.) intervals.

The cost associated with each width interval is a function of the cost of concrete and the barrier cross sectional area. Concrete was estimated at a cost of $62.12 per cubic meter ($81.25 per cubic yard) from construction companies throughout the Midwest. The cross-sectional area was calculated for each barrier width by ignoring the rounded internal angle near the top of the barrier face. Also, as pointed out in Section 7.2, the barrier was designed with a dowel bar and asphalt keyway anchorage system. As such, the total height of the cast barrier shape was 1,143 mm (45 in.), not 1,067 mm (42 in.), to allow the 76 mm (3 in.) asphalt keyway to be poured along both sides of the barrier. Table 29 contains the calculated cross-sectional area and the cost of concrete associated with each barrier width. Costs were calculated per unit length of barrier as a basis for comparing one design to another.

Table 29. Concrete Cost per Foot of Barrier as a Function of Barrier Width

Width at Barrier Top		Width at Barrier Base		Cross Section Area		Volume Per Length of Barrier		Concrete Cost Per Length of Barrier	
(mm)	(in)	(mm)	(in)	(m^2)	(in^2)	(m^3 / m	(yd^3 / ft)	($ / m)	($ / ft)
102	4	613	24.125	0.573	888	0.573	0.228	$60.88	$18.56
127	5	638	25.125	0.602	933	0.602	0.240	$63.97	$19.50
152	6	664	26.125	0.631	978	0.631	0.252	$67.05	$20.44
178	7	689	27.125	0.660	1023	0.660	0.263	$70.14	$21.38
203	8	714	28.125	0.689	1068	0.689	0.275	$73.22	$22.32

7.3.2 Longitudinal Rebar

Both the size and the number of longitudinal bars were varied through the cross section. All rebar sizes between #3 bar and #6 bar, 10 and 19 mm (0.375 and 0.75 in.) in diameter respectively, were considered for use as longitudinal steel. One bar size was used in each longitudinal steel configuration. The number of longitudinal bars varied from 5 to 13 using increments of 2. The odd number of bars for every design was the result of an equal number of bars on each side of the barrier and putting one at the top bend of the stirrup. Also, a longitudinal bar was located at every bend in the top part of the stirrup, so three bars had the same position for every configuration. Figure 41 illustrates a few of these longitudinal steel layout options.

Calculating the cost for each of the longitudinal steel configurations was completed using an estimated price of rebar of $0.46 per kilogram ($1.02 per pound). This cost estimate was derived from discussions with multiple construction companies in the Midwest region. Included in the estimate is both material cost and labor needed to bend and tie rebar. Thus, the rebar cost also applies to the stirrup cost calculated in Section 7.3.3.

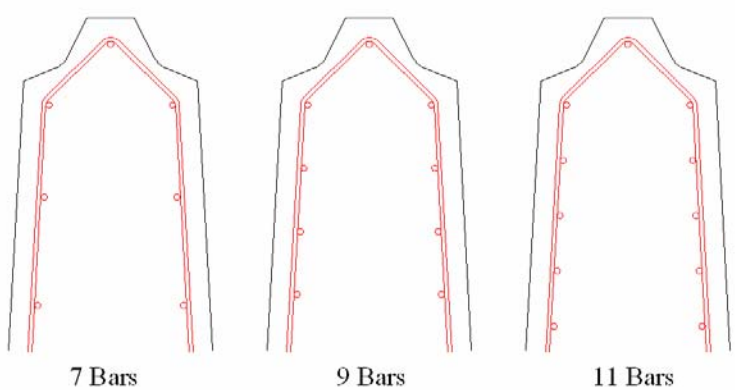

Figure 41. Rebar Layouts for Different Numbers of Longitudinal Bars

The total mass (weight) of the rebar per unit length of barrier is used to calculate the cost of the longitudinal steel. The total amount of longitudinal steel will be added in with the stirrup rebar to get a total amount of steel in mass per meter (weight / foot). Table 30 breaks down the mass per meter (weight / foot) of barrier of longitudinal steel for each of the configuration possibilities. Multiplying these values by the estimated cost of steel, $0.46 per kilogram ($1.02 per pound), produces the estimated cost of each arrangement.

Table 30. Amount of Longitudinal Steel per Length for Various Configurations

Number of Bars	Weight of Longitudinal Steel per Barrier Length							
	#3 bar		#4 bar		#5 bar		#6 bar	
	0.560 kg / m	0.376 lbs / ft	0.994 kg / m	0.668 lbs / ft	1.552 kg / m	1.043 lbs / ft	2.235 kg / m	1.502 lbs / ft
5	2.798	1.880	4.970	3.340	7.761	5.215	11.176	7.510
7	3.917	2.632	6.959	4.676	10.865	7.301	15.646	10.514
9	5.036	3.384	8.947	6.012	13.969	9.387	20.117	13.518
11	6.155	4.136	10.935	7.348	17.073	11.473	24.587	16.522
13	7.274	4.888	12.923	8.684	20.178	13.559	29.058	19.526

7.3.3 Stirrup Rebar

The barrier stirrups were varied in both bar size and in spacing, in a manner similar to the longitudinal steel. Stirrup bar sizes were varied between #3 bar and #6 bar. The spacing between stirrups was varied from 305 to 914 mm (12 to 36 in.) in intervals of 152 mm (6 in.). The minimum spacing of 305 mm (12 in.) was set because a tighter spacing could cause concrete flow problems during slipforming and leave voids in the barrier. The 914 mm (36 in.) maximum was set because a longer spacing would allow the longitudinal steel to sag and the concrete to slump between ties rendering the spacing impractical.

Stirrup costs were calculated as a function of weight, as described in Section 7.3.2. However, the stirrup weight is a function of bar size, stirrup length, and spacing. Each rebar size has a standard rebar mass (weight) which can be directly applied to the mass (weight) calculation. Spacing is important because the different barrier configurations were compared on a cost per unit length basis. Thus, the number of stirrups in each barrier meter (foot), or fraction there of, was needed. The final factor, the stirrup length, was more difficult to estimate since the length is dependant on both the bar size and the barrier width.

Section 7.2 pointed out that the stirrups must have a clear cover of 64 mm (2.5 in.) from the barrier face. Thus, as the barrier gets wider, the stirrups get wider and the overall length of the stirrups increase. The clear cover also effects how high into the top protrusion of the barrier that the stirrup can reach. With the narrower sections, the stirrup has limited reach, but with the wider sections, the stirrup can reach all the way into the top of the barrier. The higher a stirrup can reach in the barrier, the longer its overall length. Therefore, as the barrier gets wider, the stirrups become longer due to the increased width and increased height of the stirrup.

The stirrup bar size effects the stirrup length because the bar size limits the minimum bend diameter. Bigger bars have larger minimum bend diameters, thereby restricting the stirrups ability to fit into tight areas. For example, getting steel into the upper protrusion of the barrier when the top width is specified at 102 mm (4 in.) requires a small bar size, and small bending diameter. As illustrated in Figure 42 for a #3 bar and a #6 bar both bent at the minimum allowable diameter, large diameter bars cannot provide reinforcement for the top of the barrier.

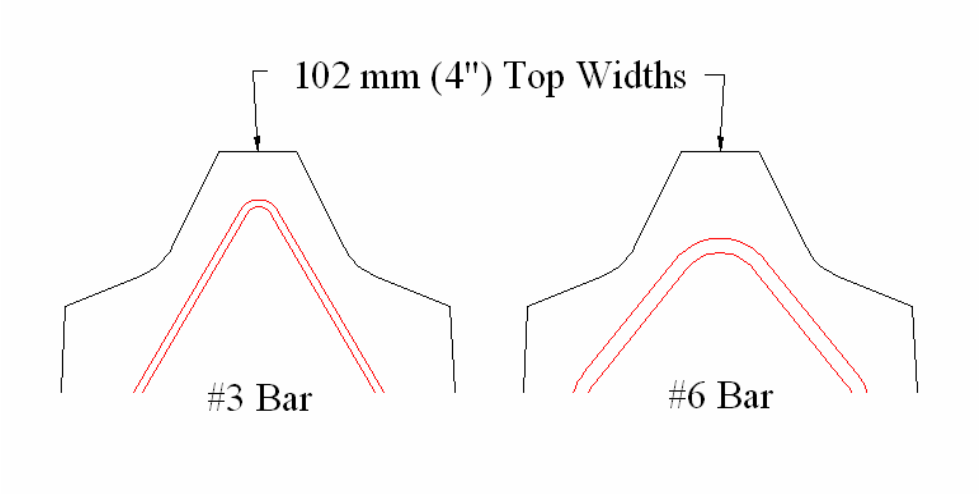

Figure 42. Illustrating the Restriction of Large Bars in Small Areas

Rebar size also affects the stirrup length through the minimum development length. If a larger bar size is used, the stirrup length would be increased due to a longer development length requirement. In fact, the minimum development length, and minimum length for a lap splice, exceeds the length of straight segments in the barrier for both #5 and #6 rebar. Hooks were required to anchor the stirrup ends for these bar size and, for uniformity, were applied to the smaller bars as well. However, the minimum extension after a hook is still a function of the bar diameter, so the larger the bar, the longer the stirrup.

With all of these factors affecting stirrup length, the length of every combination of bar size and barrier width had to be calculated separately. Each combination conformed to the clear cover limits prescribed in Section 7.2.1 as well as the minimum bend diameter and extension beyond hooks requirements found in the American Concrete Industries standards [80]. These requirements are shown in Table 31. The extension past a hook was rounded up to the nearest inch for simplicity.

Table 31. Stirrup Design Requirements per Bar Size

Bar Size	Clear Cover Along Barrier Face/Bottom		Clear Cover For Barrier Top		Minimum Inside Bend Diameter		Minimum Extension Beyond a Hook		Extension Used	
	(mm)	(in.)	(mm)	(in.)	(mm)	(in.)	(mm)	(in.)	(mm)	(in.)
3	63.5	2.5	50.8	2	38.1	1.5	57.15	2.25	76.2	3
4	63.5	2.5	50.8	2	50.8	2	76.2	3	76.2	3
5	63.5	2.5	50.8	2	63.5	2.5	95.25	3.75	101.6	4
6	63.5	2.5	50.8	2	114.3	4.5	228.6	9	228.6	9

The lengths of the each stirrup were then measured for every bar size and barrier width combination. Table 32 and Table 33 contain the calculated lengths in SI and English units respectively.

Table 32. Stirrup Lengths as a Function of Barrier Width and Bar Size (SI)

Stirrup Lengths (mm)				
Top Width (mm) \ Bar Size	#3	#4	#5	#6
102	2,777	2,817	2,835	3,118
127	2,853	2,887	2,905	3,276
152	2,910	2,938	2,974	3,346
178	2,961	2,988	3,006	3,410
203	3,012	3,046	3,070	3,473

Table 33. Stirrup Lengths as a Function of Barrier Width and Bar Size (English)

Stirrup Lengths (in)				
Top Width (in) \ Bar Size	#3	#4	#5	#6
4	109.3	110.9	111.6	122.7
5	112.3	113.7	114.4	129.0
6	114.6	115.7	117.1	131.7
7	116.6	117.7	118.4	134.2
8	118.6	119.9	120.9	136.7

Estimating the cost of each stirrup requires the spacing and bar masses (weights) to be incorporated into the calculation. Therefore, the stirrup lengths need to be divided by the spacing, to get the length of stirrup used per length of barrier. Next, multiply the rebar mass (weight) per length to get the stirrup mass (weight) per barrier length. Table 34 and Table 35 list the amount of steel per length of barrier for each of the possible stirrup size, stirrup spacing, and barrier width combinations. These values can then be multiplied by the estimated price of steel, $0.46 per kilogram ($1.02 per pound), to get the cost of each stirrup configuration.

Table 34. Mass of Stirrup per Meter of Barrier for All Combinations (SI)

Barrier Top Width (mm)	Stirrup Bar Size	Stirrup Length (mm)	Bar Mass (kg / m)	Mass of Stirrups in Pounds Per Barrier Foot (kg / m)				
				305 mm Spacing	457 mm Spacing	610 mm Spacing	762 mm Spacing	914 mm Spacing
102	#3	2,777	0.560	5.10	3.40	2.55	2.04	1.70
	#4	2,817	0.994	9.19	6.12	4.59	3.67	3.06
	#5	2,835	1.552	14.44	9.62	7.22	5.77	4.81
	#6	3,118	2.235	22.86	15.24	11.43	9.14	7.62
127	#3	2,853	0.560	5.24	3.49	2.62	2.10	1.75
	#4	2,887	0.994	9.42	6.28	4.71	3.77	3.14
	#5	2,905	1.552	14.79	9.86	7.40	5.92	4.93
	#6	3,276	2.235	24.03	16.02	12.01	9.61	8.01
152	#3	2,910	0.560	5.34	3.56	2.67	2.14	1.78
	#4	2,938	0.994	9.58	6.39	4.79	3.83	3.19
	#5	2,974	1.552	15.15	10.10	7.57	6.06	5.05
	#6	3,346	2.235	24.54	16.36	12.27	9.82	8.18
178	#3	2,961	0.560	5.44	3.62	2.72	2.17	1.81
	#4	2,988	0.994	9.75	6.50	4.87	3.90	3.25
	#5	3,006	1.552	15.31	10.21	7.65	6.12	5.10
	#6	3,410	2.235	25.00	16.67	12.50	10.00	8.33
203	#3	3,012	0.560	5.53	3.69	2.76	2.21	1.84
	#4	3,046	0.994	9.93	6.62	4.97	3.97	3.31
	#5	3,070	1.552	15.63	10.42	7.82	6.25	5.21
	#6	3,473	2.235	25.47	16.98	12.74	10.19	8.49

Table 35. Weight of Stirrup per Foot of Barrier for All Combinations (English)

Barrier Top Width (in)	Stirrup Bar Size	Stirrup Length (in)	Bar Weight (lb / ft)	Weight of Stirrups in Pounds Per Barrier Foot (lbs / ft)				
				12" Spacing	18" Spacing	24" Spacing	30" Spacing	36" Spacing
4	#3	109.34	0.376	3.43	2.28	1.71	1.37	1.14
	#4	110.91	0.668	6.17	4.12	3.09	2.47	2.06
	#5	111.60	1.043	9.70	6.47	4.85	3.88	3.23
	#6	122.74	1.502	15.36	10.24	7.68	6.15	5.12
5	#3	112.34	0.376	3.52	2.35	1.76	1.41	1.17
	#4	113.66	0.668	6.33	4.22	3.16	2.53	2.11
	#5	114.35	1.043	9.94	6.63	4.97	3.98	3.31
	#6	128.99	1.502	16.15	10.76	8.07	6.46	5.38
6	#3	114.59	0.376	3.59	2.39	1.80	1.44	1.20
	#4	115.66	0.668	6.44	4.29	3.22	2.58	2.15
	#5	117.10	1.043	10.18	6.79	5.09	4.07	3.39
	#6	131.74	1.502	16.49	10.99	8.24	6.60	5.50
7	#3	116.59	0.376	3.65	2.44	1.83	1.46	1.22
	#4	117.66	0.668	6.55	4.37	3.27	2.62	2.18
	#5	118.35	1.043	10.29	6.86	5.14	4.11	3.43
	#6	134.24	1.502	16.80	11.20	8.40	6.72	5.60
8	#3	118.59	0.376	3.72	2.48	1.86	1.49	1.24
	#4	119.91	0.668	6.67	4.45	3.34	2.67	2.22
	#5	120.85	1.043	10.50	7.00	5.25	4.20	3.50
	#6	136.74	1.502	17.12	11.41	8.56	6.85	5.71

7.4 Barrier Capacity Calculations

The ultimate strength for each of the barrier configurations was calculated using yield line theory. Yield line theory predicts the ultimate strength by treating the barrier like a flat slab and using the conservation of energy principle with an assumed failure shape. The external work, or energy applied to the barrier system, is equivalent to the impact load multiplied by a displacement. The internal energy absorbed is calculated as the sum of the bending moments multiplied by the displacement angle along each edge of the predicted failure shape, also called yield lines [16].

The predicted failure is a saw tooth shape, as shown in Figure 43. The moments associated with a concrete parapet include the bending moment along the length of the wall, M_w; the cantilever bending moment at the base of the barrier resisting overturning, M_c; and the

bending moment of beams located in or on top of the barrier, M_b. Also, the impact load assumes the shape of a distributed line load of constant magnitude, w, and length, ℓ, usually applied at the top of the barrier, or height, H.

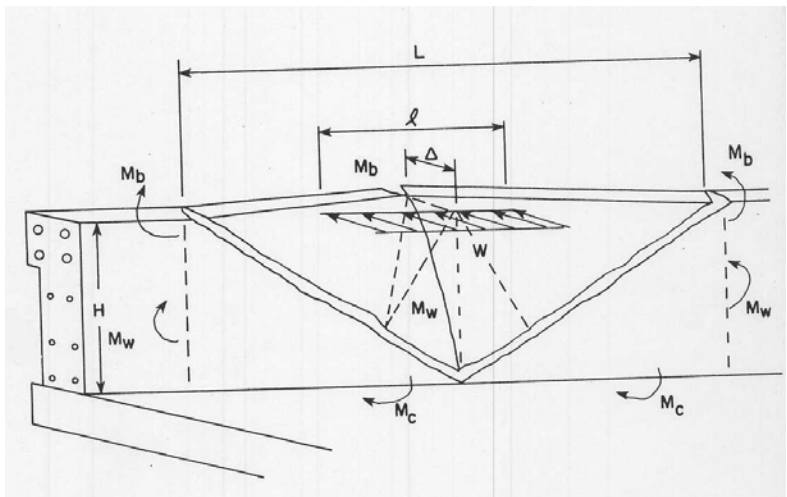

Figure 43. Yield Line Failure Shape Assumption and Bending Moments

The ultimate strength of the barrier is found using a combination of two equations. The first equation is used to calculate the critical length, L, of the failure shape. The second calculates the ultimate strength of the barrier as a function of the individual bending moments and the critical length. A load safety factor of Φ = 0.9 was used in the second equation to ensure integrity.

$$L = \frac{\ell}{2} + \sqrt{\left(\frac{\ell}{2}\right)^2 + 8H\frac{\left(M_b + M_w H\right)}{M_c}} \qquad \text{(eq. 7.1)}$$

$$\phi(w\ell) = 0.9 * \frac{8M_b}{L - \ell/2} + \frac{8M_w H}{L - \ell/2} + \frac{M_c L^2}{H\left(L - \ell/2\right)} \qquad \text{(eq. 7.2)}$$

In the above equations, wℓ is the total resistive force and H is the height to the load. Also, the bending moment of the wall, M_w, is in terms of moment per vertical length of barrier.

Finally, the cantilever bending moment resisting overturning, M_c, is in terms of moment per longitudinal length of barrier.

The variables dealing with the applied load were set to match the impacting vehicle, a tractor trailer, and the barrier geometry. For example, the applied load height, H, was set at 864 mm (34 in.) to match the height of the first break point on the barrier face. Only the barrier face is expected to provide the lateral force in redirecting the tractor trailer. The top protrusion of the barrier is only expected to provide the vertical force to keep the box from rolling over the barrier. Thus, the critical load position is at the top of the barrier face.

The length of the applied distributed line load was approximated from the length of the tandem axles of the tractor trailer. The peak impact load is expected to coincide with the impact of the either the tractor tandems or the trailer tandems [15]. Both of the tandems have approximately the same length of 2,438 mm (8 ft). Therefore, the length of the applied load, ℓ, was set at 2,438 mm (8 ft).

The longitudinal bending moment of the barrier wall, M_w, is a function of the barrier cross-sectional properties. The barrier cross-sectional geometry was modeled as a rectangular shape to simplify the calculations. The upper portion of the barrier was not included in the equivalent rectangular beam because its small width and height would not contribute significantly to the barrier's structural capacity. The effective rectangular beam was therefore selected to be 864 mm (34 in.) high, and the width was set to be equal to the average width below the upper protrusion. The portion of the barrier below the ground was not included in the analysis because other anchorage systems do not extend below the grade.

For the moment calculations with the simplified rectangular shape, the longitudinal steel for each configuration was placed at a depth 89 mm (3.5 in.) from both the front and back surfaces to account for clear cover, bar diameter, and barrier slope factors. Note that the top bar, located in the upper protrusion of the barrier, was neglected. The exclusion of the top bar from the strength calculations resulted in an even number of bars to be distributed to the barrier sides. Refer back to Figure 41 in Section 7.3.2 for an illustration of the longitudinal steel layout and its symmetry.

The moment obtained from the simplified barrier cross section then had to be divided by the applied load height in order to get M_w. Thus, the resulting bending moment from each combination of barrier width and longitudinal steel configuration was divided by the applied load height, H equal to 0.863 m (2.833 ft), to get M_w in units of kN-m/m (kip-ft/ft).

The cantilever moment, M_c, was calculated through the barrier section on the same plane as the roadway. The stirrups and the concrete along this plane were assumed fixed regardless of the anchorage type. Moment capacities were again calculated on simplified geometries. The section was represented by a rectangle with a width equal to the stirrup spacing and a depth equal to the width of the base for each configuration. The steel was positioned with 63.5 mm (2.5 in) of clear cover as designed in Section 7.3.3. The moment capacity for each of the stirrup configurations was then divided by the stirrup spacing to obtain the correct units for M_c of kN-m/m (kip-ft/ft) of barrier length.

The variable representing any beams in or on the barrier, M_b, did not apply to the geometry of this barrier. Therefore, M_b was equal to zero for all barrier configurations.

During all moment calculations for M_w and M_c, the compressive strength of concrete was assumed to be 27.6 MPa (4 ksi). Through discussions will contractors, concrete mixes resulting in a minimum 28 day compressive strength of 27.6 MPa (4 ksi) are commonly used during slipform operations, so it was selected as the design strength. Also, all longitudinal and stirrup rebar were designed with a yield strength of 413.7 MPa (60 ksi).

7.5 Optimum Barrier Design Requirements

All of the barrier options were required to incorporate enough longitudinal steel to meet shrinkage and temperature requirements. Shrinkage and temperature steel prevents premature cracks and deterioration and ensures a long barrier life. Also, with adequate steel in the concrete barrier, expansion / contraction joints are not necessary. The American Concrete Institute sets the required area of shrinkage and temperature steel as 0.0018 times the cross-sectional area [80]. Of course, the specific amount of steel needed is then a function of the barrier width. Thus, all barrier design options that did not meet the minimum temperature and shrinkage steel requirement were eliminated from further consideration.

The barrier must be designed with sufficient strength to redirect a tractor trailer. The minimum capacity for the barrier was set through strength evaluations of previous TL-5 barriers. A yield line analysis, described in Section 7.4, was used to calculate the ultimate strength capacity of three barriers. All three barriers were 1,067 mm (42 in.) tall, reinforced concrete parapets and were successfully crash tested under NCHRP Report 350 TL-5 impact conditions. The calculated capacities for each of the three barrier systems are listed in Table 36.

Table 36. Calculated Strength Capacities for Previous TL-5 Barriers

Test	Ref No.	Barrier Description	Barrier Height		Ultimate Strength	
			(mm)	(in)	(kN)	(kips)
4798-13	19	Reinforced Concrete - New Jersey Shape Median	1067	42	1913.6	430.2
405511-2	21	Reinforced Concrete - Vertical Bridge Rail	1067	42	965.3	217
ACBR-1	13	Reinforcd Concrete - Open Concrete Bridge Rail	1067	42	941.7	211.7

A strength capacity of 941.7 kN (211.7 kips) was selected as the minimum ultimate strength for the barrier. This strength was the lowest of the proven barrier capacities in previous crash tests. Therefore, any barrier configuration resulting in a capacity of 941.7 kN (211.7 kips) or above should redirect a tractor trailer under NCHRP Report 350 impact conditions.

7.6 Barrier Optimization Results

Every combination of longitudinal steel, stirrup bar size, stirrup spacing, and barrier width identified previously was used in the optimization process and resulted in 2000 barrier configurations. The ultimate strength for each configuration was calculated using yield line theory, as described in Section 7.4. The barrier configurations not meeting the necessary ultimate capacity were eliminated from consideration.

The cost for each of the structurally adequate designs was estimated in terms of price per barrier foot, as explained in Section 7.3. Finally, the barriers which meet all of the design requirements were compared in terms of cost, and the optimum barrier designs were chosen.

Appendix A contains the calculated strengths and costs for all of the 2,000 possible barrier configurations. Abbreviated lists of the best designs are shown in Table 37 and Table 38.

For each of the barrier width and stirrup combinations, the optimum longitudinal steel configuration is listed. The shortened list also contains the calculated capacities and costs for each option. A blank line in the table represents a width and stirrup combination in which none of the longitudinal steel options met the design requirements.

The barrier configurations highlighted in yellow in Table 37and Table 38 are pointed out as three of the best barrier designs. These three meet all of the design criteria, are three of the least costly designs, and provide a variety of reinforcement possibilities with different stirrup sizes, stirrup spacing, and number of longitudinal bars. Detailed drawings for each of these three designs are shown in Figure 44 through Figure 46.

Table 37. Optimum Designs by Width and Stirrup Combination (SI)

Top Width (mm)	Stirrups		Longitudinal Steel		ΦRw (kN)	Total Cost ($ / m)
	Bar Size (#)	Spacing (mm)	Bar Size (#)	Quantity		
102	3	305				
		457				
		610				
		762				
		914				
	4	305	4	13	991.7	$110.61
		457	6	13	988.2	$140.00
		610				
		762				
		914				
	5	305	4	9	1193.4	$113.46
		457	4	11	958.3	$107.12
		610	6	9	951.5	$122.35
		762	6	13	947.2	$139.21
		914				
	6	305	4	9	1534.0	$132.42
		457	4	9	1146.6	$115.28
		610	5	7	979.2	$111.02
		762	5	11	990.8	$119.84
		914	6	11	987.1	$133.31
127	3	305				
		457				
		610				
		762				
		914				
	4	305	5	7	960.9	$109.58
		457	6	11	976.0	$133.38
		610				
		762				
		914				
	5	305	4	9	1247.4	$117.35
		457	5	7	982.1	$110.58
		610	5	11	957.4	$118.99
		762	6	13	994.2	$142.62
		914				
	6	305	4	9	1605.1	$138.12
		457	4	9	1200.7	$120.11
		610	4	9	982.3	$111.10
		762	4	13	954.9	$114.64
		914	6	9	963.5	$127.22
152	3	305	6	13	969.7	$144.41
		457				
		610				
		762				
		914				
	4	305	4	9	960.1	$108.72
		457	6	9	949.4	$126.66
		610				
		762				
		914				
	5	305	4	9	1303.6	$121.24
		457	4	9	982.3	$109.88
		610	6	7	949.0	$119.27
		762	6	11	977.8	$135.97
		914				
	6	305	4	9	1678.2	$142.36
		457	4	9	1253.3	$123.96
		610	4	9	1025.1	$114.77
		762	4	13	997.0	$118.19
		914	5	11	966.8	$123.84

Table 37(Continued). Optimum Designs by Width and Stirrup Combination (SI)

Top Width (mm)	Stirrups		Longitudinal Steel		ΦRw (kN)	Total Cost ($ / m)
	Bar Size (#)	Spacing (mm)	Bar Size (#)	Quantity		
178	3	305	6	11	949.1	$137.66
		457				
		610				
		762				
		914				
	4	305	5	7	1045.7	$116.49
		457	5	11	949.5	$123.15
		610	6	13	956.7	$146.44
		762				
		914				
	5	305	5	7	1413.5	$129.00
		457	5	7	1068.5	$117.52
		610	4	13	957.9	$116.41
		762	6	9	948.4	$129.15
		914	6	13	976.1	$146.96
	6	305	5	7	1810.1	$150.80
		457	5	7	1359.8	$132.06
		610	5	7	1114.8	$122.69
		762	5	7	960.1	$117.06
		914	6	7	954.7	$124.07
203	3	305	6	11	990.5	$140.95
		457				
		610				
		762				
		914				
	4	305	5	7	1088.2	$120.00
		457	5	11	988.6	$126.51
		610	6	13	997.6	$149.74
		762				
		914				
	5	305	5	7	1469.9	$132.81
		457	5	7	1112.6	$121.09
		610	4	13	997.6	$119.86
		762	5	11	945.4	$125.68
		914	6	11	955.2	$140.23
	6	305	5	7	1884.0	$154.93
		457	5	7	1414.7	$135.84
		610	5	7	1160.9	$126.30
		762	5	7	998.7	$120.57
		914	4	13	962.2	$121.38

Table 38. Optimum Designs by Width and Stirrup (English Units)

Top Width (in.)	Stirrups		Longitudinal Steel		ΦRw (kips)	Total Cost ($/foot)
	Bar Size (#)	Spacing (in.)	Bar Size (#)	Quantity		
4	3	12				
		18				
		24				
		30				
		36				
	4	12	4	13	222.9	$33.71
		18	6	13	222.2	$42.67
		24				
		30				
		36				
	5	12	4	9	268.3	$34.58
		18	4	11	215.4	$32.65
		24	6	9	213.9	$37.29
		30	6	13	212.9	$42.43
		36				
	6	12	4	9	344.9	$40.36
		18	4	9	257.8	$35.14
		24	5	7	220.1	$33.84
		30	5	11	222.7	$36.53
		36	6	11	221.9	$40.63
5	3	12				
		18				
		24				
		30				
		36				
	4	12	5	7	216.0	$33.40
		18	6	11	219.4	$40.65
		24				
		30				
		36				
	5	12	4	9	280.4	$35.77
		18	5	7	220.8	$33.70
		24	5	11	215.2	$36.27
		30	6	13	223.5	$43.47
		36				
	6	12	4	9	360.8	$42.10
		18	4	9	269.9	$36.61
		24	4	9	220.8	$33.86
		30	4	13	214.7	$34.94
		36	6	9	216.6	$38.78
6	3	12	6	13	218.0	$44.02
		18				
		24				
		30				
		36				
	4	12	4	9	215.8	$33.14
		18	6	9	213.4	$38.61
		24				
		30				
		36				
	5	12	4	9	293.1	$36.95
		18	4	9	220.8	$33.49
		24	6	7	213.3	$36.35
		30	6	11	219.8	$41.44
		36				
	6	12	4	9	377.3	$43.39
		18	4	9	281.7	$37.78
		24	4	9	230.5	$34.98
		30	4	13	224.1	$36.02
		36	5	11	217.3	$37.75

Table 38 (Continued). Optimum Designs by Width and Stirrup (English Units)

Top Width (in.)	Stirrups		Longitudinal Steel		ΦRw (kips)	Total Cost ($/foot)
	Bar Size (#)	Spacing (in.)	Bar Size (#)	Quantity		
7	3	12	6	11	213.4	$41.96
		18				
		24				
		30				
		36				
	4	12	5	7	235.1	$35.51
		18	5	11	213.4	$37.54
		24	6	13	215.1	$44.64
		30				
		36				
	5	12	5	7	317.8	$39.32
		18	5	7	240.2	$35.82
		24	4	13	215.4	$35.48
		30	6	9	213.2	$39.36
		36	6	13	219.4	$44.79
	6	12	5	7	406.9	$45.96
		18	5	7	305.7	$40.25
		24	5	7	250.6	$37.40
		30	5	7	215.8	$35.68
		36	6	7	214.6	$37.82
8	3	12	6	11	222.7	$42.96
		18				
		24				
		30				
		36				
	4	12	5	7	244.6	$36.58
		18	5	11	222.2	$38.56
		24	6	13	224.3	$45.64
		30				
		36				
	5	12	5	7	330.4	$40.48
		18	5	7	250.1	$36.91
		24	4	13	224.3	$36.53
		30	5	11	212.5	$38.31
		36	6	11	214.7	$42.74
	6	12	5	7	423.5	$47.22
		18	5	7	318.0	$41.41
		24	5	7	261.0	$38.50
		30	5	7	224.5	$36.75
		36	4	13	216.3	$37.00

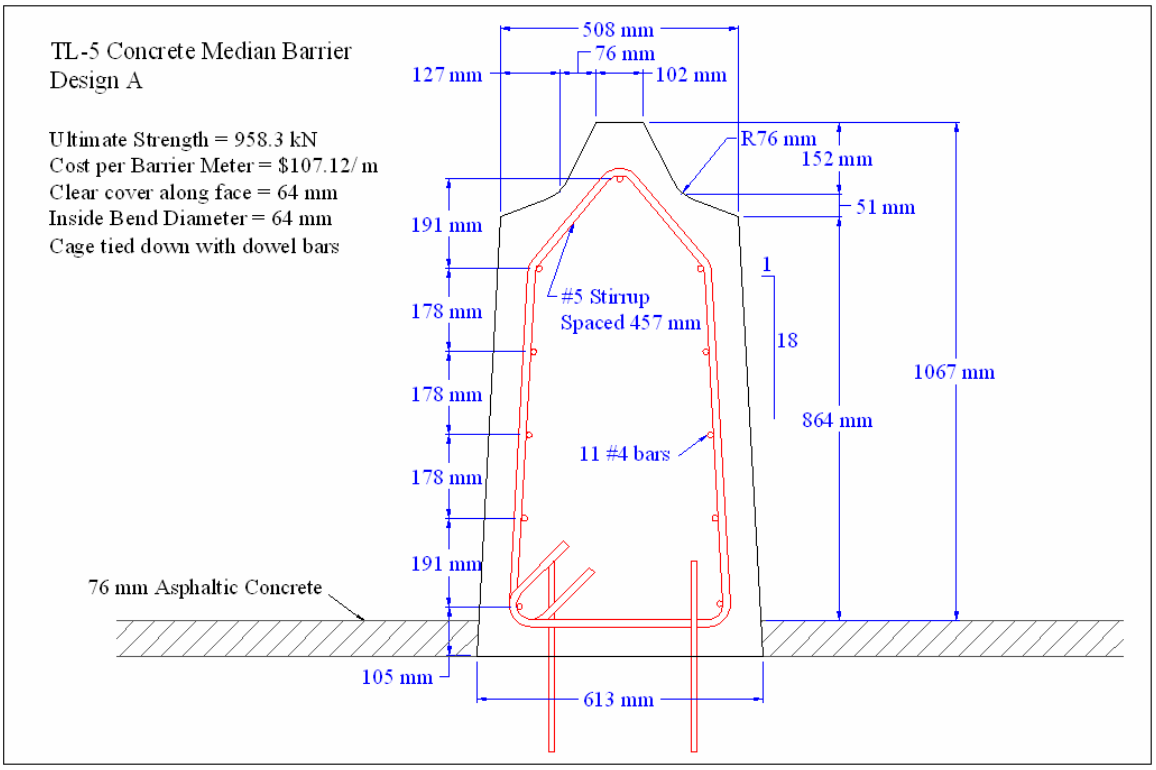

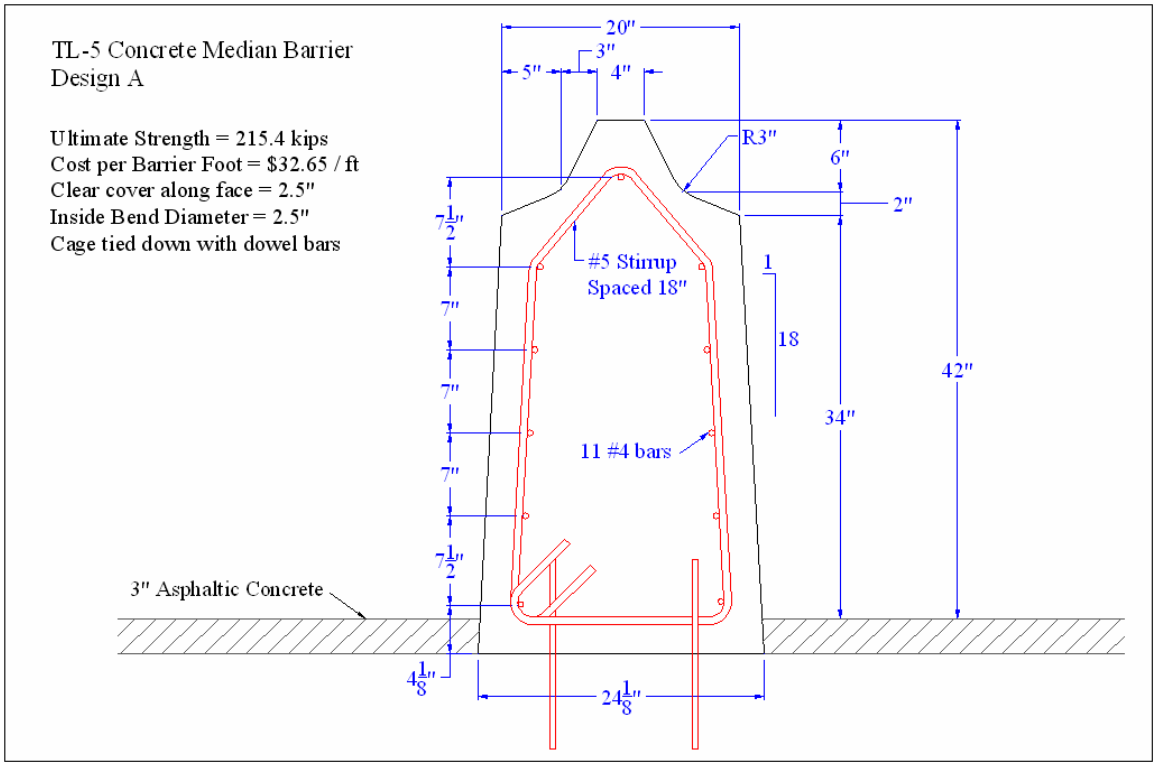

Figure 44. Design A, One of Three Top Designs

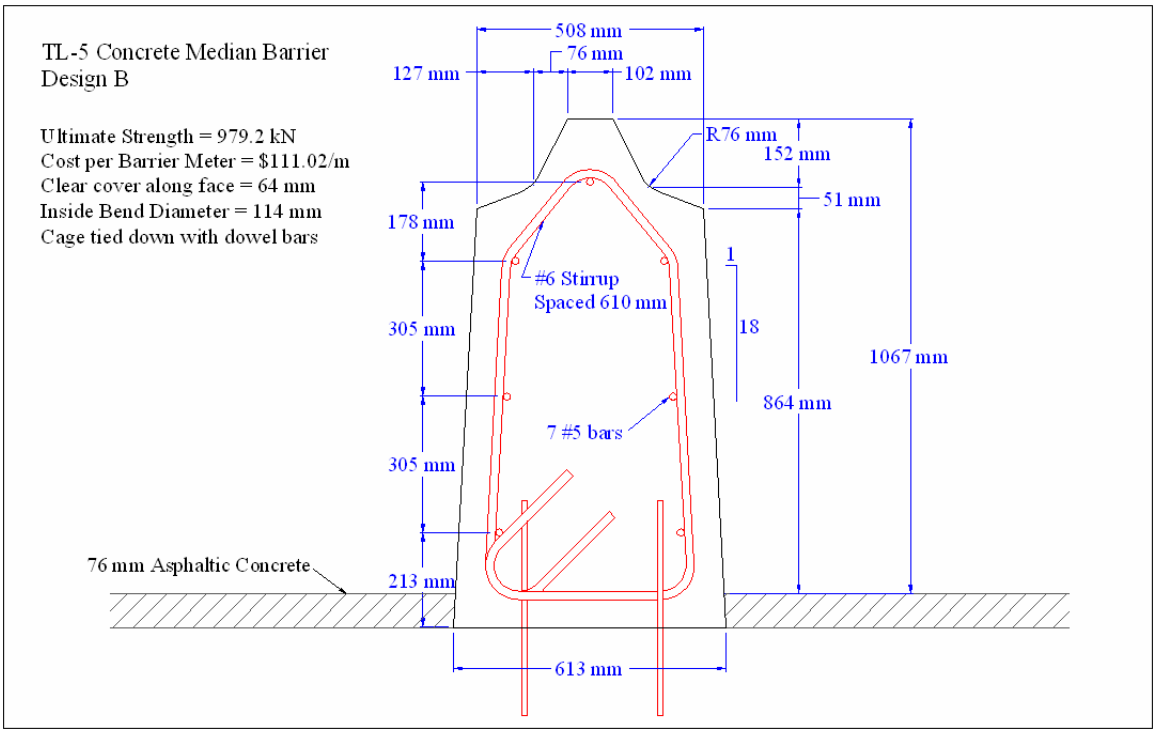

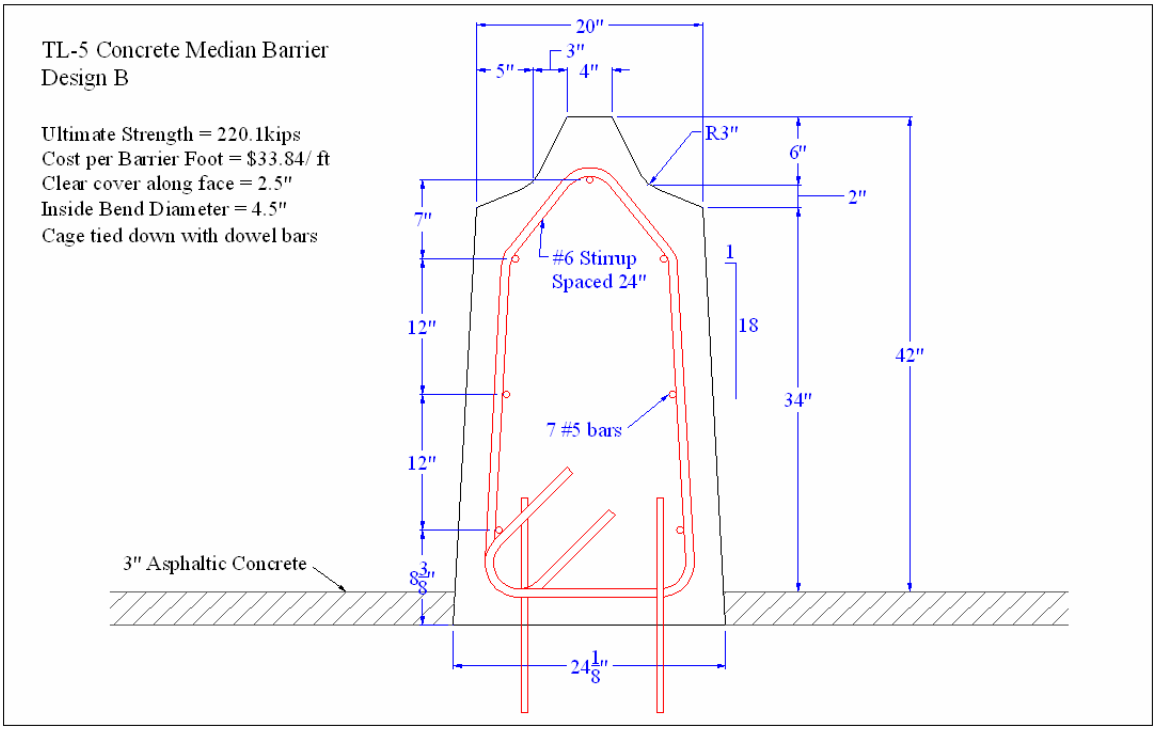

Figure 45. Design B, One of Three Top Designs

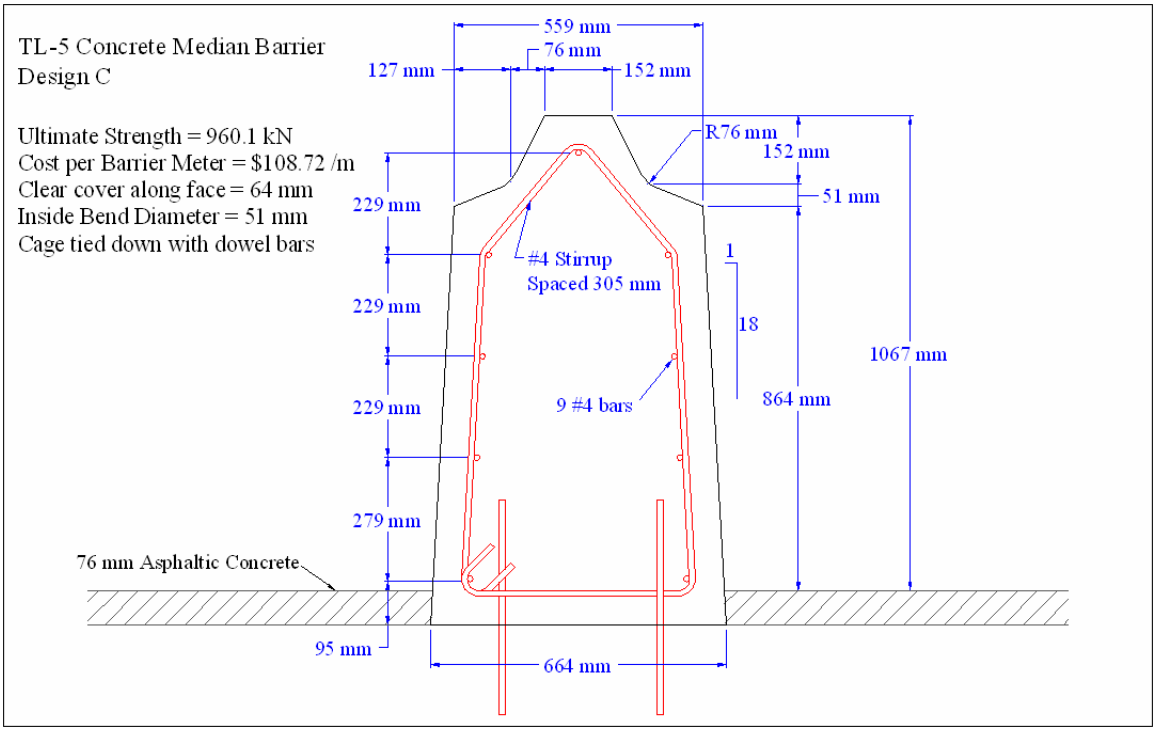

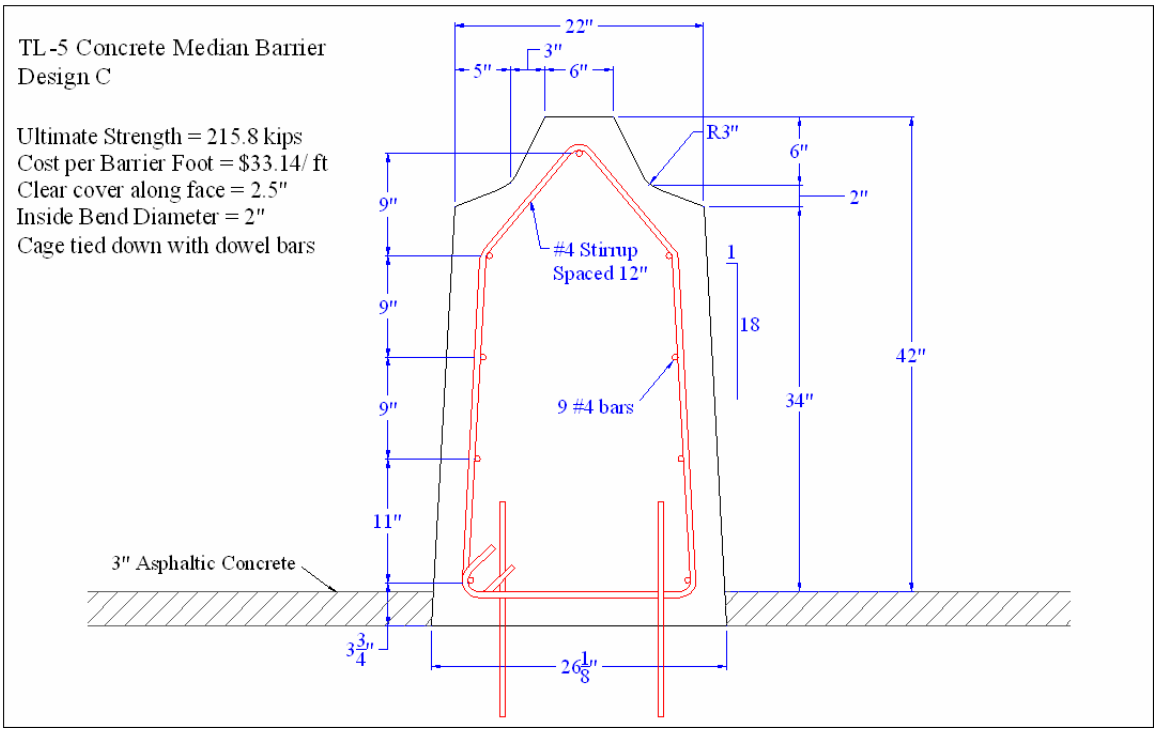

Figure 46. Design C, One of Three Top Designs

Different construction companies and State DOTs had varying preferences among the top three designs. Design C was preferred by some for the closer stirrup spacing to hold the barrier shape from slumping and a small stirrup to make bending easier. Others preferred Design B for the narrow barrier width and because it contained the fewest number of longitudinal bars, thus requiring the least amount of ties and labor. Finally, Design A was preferred because of its low cost, narrow width, and providing the highest number of longitudinal bars to prevent stirrup movement during slipforming.

Clearly, a consensus selection was not available. Instead, the specific choice of internal reinforcement and barrier width will be left for the project engineer to select. Design A was selected for the full-scale crash testing because it contained the lowest ultimate strength capacity of the selected designs. The capacity of Design A, 958.2 kN (215.4 kips), represents the minimum ultimate strength needed for this barrier. Thus, any other configuration with an ultimate strength at or above 958.2 kN (215.4 kips) would be a valid selection for use as an alternative to Design A.

7.7 Barrier End Section Design

The end sections of a reinforced concrete median barrier require special attention due to the lack of continuity. Strength calculations described above are based upon the assumption that impact loads can be distributed both upstream and downstream from impact. However, impact loads near the end of a barrier can only be distributed in a single direction. Also, special consideration should be given to the anchorage of the end section to ensure the full design capacity is met in this critical area.

7.7.1 End Section Strength Calculations

Yield line theory was again utilized for the strength calculations of the end section, but the loss of continuity causes the fracture pattern of the barrier to change from that observed in the middle of the barrier. Typically, the saw tooth shape seen for the interior section is replaced by a single fracture line. This yield line is presented in Figure 47. Applying yield line theory to this failure shape leads to the following equations [16]. Note, a load safety factor of Φ = 0.9 is still used and the variables have not been altered from the definitions given in Section 7.4.

$$L = \frac{\ell}{2} + \sqrt{\left(\frac{\ell}{2}\right)^2 + 8H\frac{\left(M_b + M_w H\right)}{M_c}} \qquad \text{(eq. 7.3)}$$

$$\phi(w\ell) = 0.9 * \frac{8M_b}{L - \ell/2} + \frac{8M_w H}{L - \ell/2} + \frac{M_c L^2}{H\left(L - \ell/2\right)} \qquad \text{(eq. 7.4)}$$

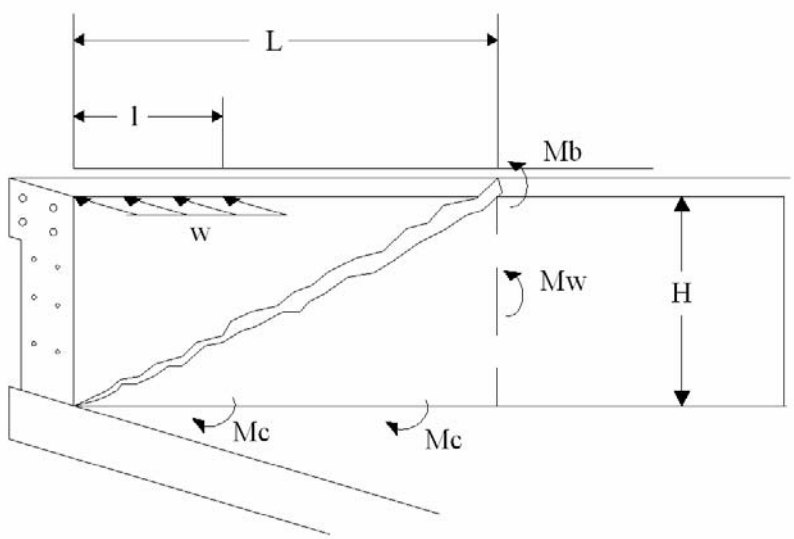

Figure 47. Assumed Failure Pattern of Barrier End Section

7.7.2 Barrier End Section Optimization

The same combinations of longitudinal steel, stirrup bar size, stirrup spacing, and barrier width used for the internal section optimization in Section 7.6 were utilized to optimize the barrier end section. Requirements for minimum shrinkage and temperature steel and for an ultimate strength capacity of 941.7 kN (211.7 kips) were also carried over from the internal section optimization. The only difference between the two optimizations was in the yield line calculations for strength capacity, as described in Section 7.7.1.

Table 39 and Table 40 present an abbreviated list of the best designs for each of the barrier width and stirrup combinations presented in SI and English units, respectively. A blank line in the table represents a width and stirrup combination in which none of the longitudinal steel options meet the design requirements. Note, none of the configurations using #3 or #4 stirrups meet the design strength, so these possibilities were not listed in the table. Appendix B contains the calculated strengths and costs for all of the 2,000 possible barrier end section configurations.

A barrier end section does have the additional requirement of matching the interior barrier section configuration. The barrier width must be consistent throughout the length of the barrier, so the width of the end section is predetermined by the width of the interior section. Also, it is preferable that the same longitudinal steel configuration carryover to the end section design. As such, Table 39 and Table 40 should be used as a guide to determine the size and spacing of the stirrups by ensuring the chosen longitudinal steel is equal to or more than the amount of longitudinal steel shown in the table. Appendix B may be used as well to check a specific configuration.

Table 39. Optimum Designs by Width and Stirrup Configuration (SI)

Top Width (mm)	Stirrups		Longitudinal Steel		ΦRw (kN)	Total Cost ($/meter)
	Bar Size (#)	Spacing (mm)	Bar Size (#)	Quantity		
102	5	305	6	13	963.3	$158.69
		457				
		610				
		762				
		914				
	6	305	4	9	1155.0	$132.42
		457				
		610				
		762				
		914				
127	5	305	5	11	943.6	$135.62
		457				
		610				
		762				
		914				
	6	305	4	9	1207.7	$138.12
		457	6	13	964.9	$165.33
		610				
		762				
		914				
152	5	305	4	11	942.5	$125.71
		457				
		610				
		762				
		914				
	6	305	4	9	1262.3	$142.36
		457	6	9	955.3	$149.08
		610				
		762				
		914				
178	5	305	5	7	976.4	$129.00
		457				
		610				
		762				
		914				
	6	305	5	7	1327.5	$150.80
		457	4	13	953.5	$136.69
		610				
		762				
		914				
203	5	305	5	7	1014.5	$132.81
		457				
		610				
		762				
		914				
	6	305	5	7	1380.8	$154.93
		457	5	7	966.9	$135.84
		610				
		762				
		914				

Table 40. Optimum Designs by Width and Stirrup Configuration (English-Units)

Top Width (in.)	Stirrups		Longitudinal Steel		ΦRw (kips)	Total Cost ($/foot)
	Bar Size (#)	Spacing (in.)	Bar Size (#)	Quantity		
4	5	12	6	13	216.6	$48.37
		18				
		24				
		30				
		36				
	6	12	4	9	259.6	$40.36
		18				
		24				
		30				
		36				
5	5	12	5	11	212.1	$41.34
		18				
		24				
		30				
		36				
	6	12	4	9	271.5	$42.10
		18	6	13	216.9	$50.39
		24				
		30				
		36				
6	5	12	4	11	211.9	$38.32
		18				
		24				
		30				
		36				
	6	12	4	9	283.8	$43.39
		18	6	9	214.8	$45.44
		24				
		30				
		36				
7	5	12	5	7	219.5	$39.32
		18				
		24				
		30				
		36				
	6	12	5	7	298.4	$45.96
		18	4	13	214.3	$41.66
		24				
		30				
		36				
8	5	12	5	7	228.1	$40.48
		18				
		24				
		30				
		36				
	6	12	5	7	310.4	$47.22
		18	5	7	217.4	$41.41
		24				
		30				
		36				

An end section configuration was then chosen for the barrier to be crash tested. The end section needed to match the 102 mm (4 in.) top width and the 11 #4 longitudinal rebar of the interior section of Design A from Section 7.6. As highlighted in yellow in Table 39 and Table 40, the only stirrup configuration to satisfy these restraints was a #6 rebar spaced at 305 mm (12 in.) intervals. Even though using only 9 #4 bars for the longitudinal steel would meet the strength requirement, 11 #4 bars was used to match the interior section and develop more continuity between the interior and end sections.

Figure 48 illustrates the selected end section configuration. Note, the stirrups are extending through the base of the barrier with the intent of being tied to, or cast into, some form of substructure. Due to the lack of continuity, the risk of barrier overturning moment is amplified significantly. In order to provide the needed overturning resistance, the stirrups were designed to be fully anchored in a concrete footing. The final shape of the stirrup and the end section substructure is presented in Section 7.8.

The length of the barrier end section is determined from the critical length, L, calculated as part of the yield line analysis. The end section configuration must extend at least as far into the barrier as the critical length, however, it is recommended to extend a few feet past this length to ensure that failure does not reach the weaker interior section of the barrier. For the design chosen, the critical length was calculated to be 2.7 m (8.75 ft). Therefore, the end section was given a length of 3.7 m (12 ft).

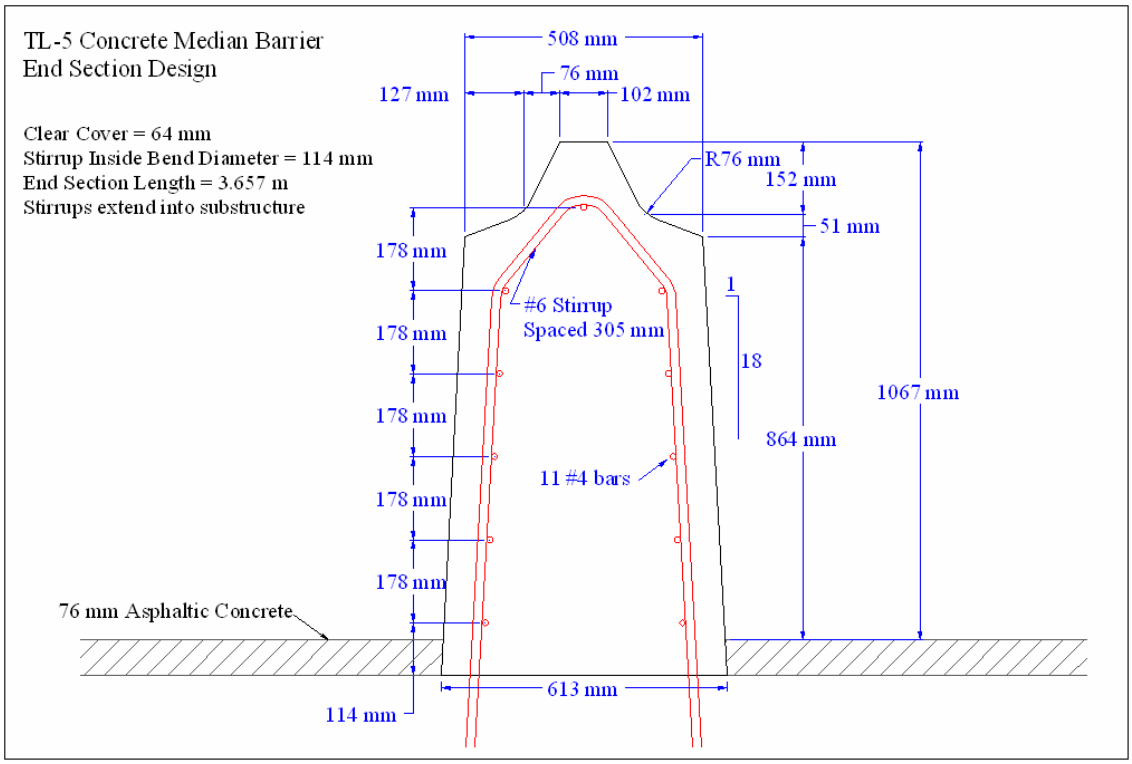

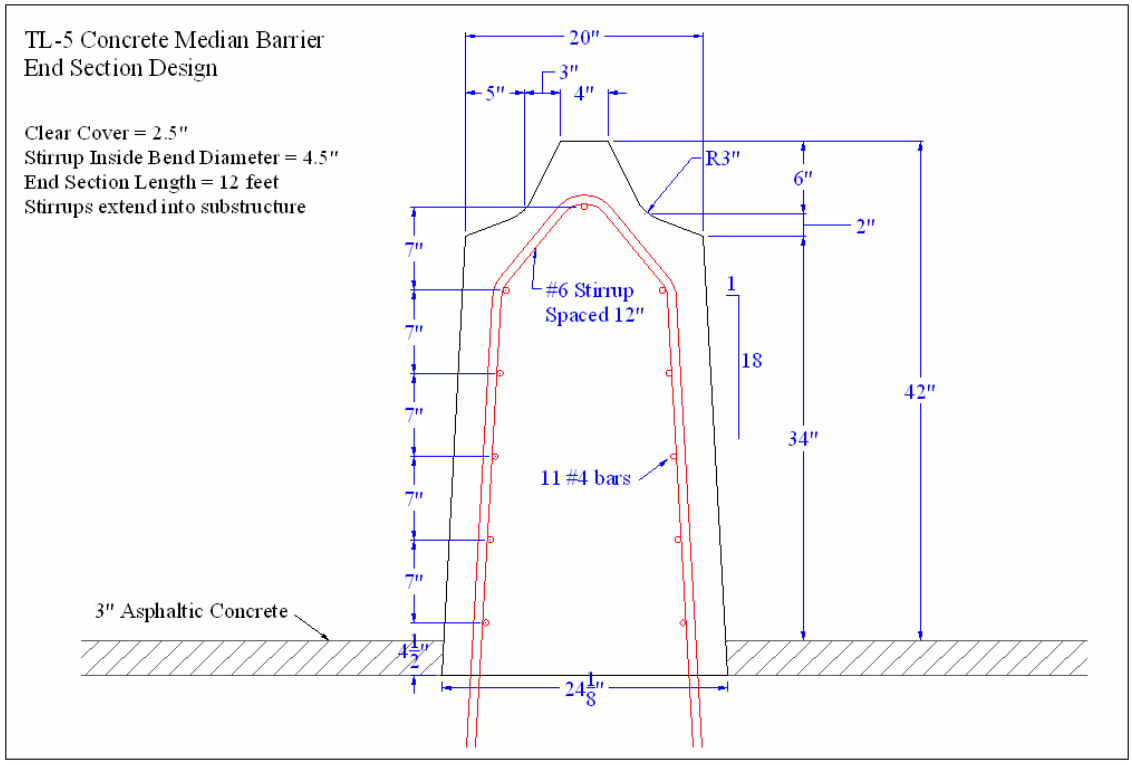

Figure 48. Barrier End Section Configuration

7.8 End Section Substructure Design

Due to a lack of continuity near the ends of longitudinal concrete barriers, concerns arise about properly anchoring the barrier. Typically, the stirrups in the end sections are cast directly into whatever substructure the barrier is sitting on. In new roadway construction, the stirrups can be cast in the roadway slabs. If the barrier is being placed on an existing roadway, the stirrups may be cast into a footer designed specifically to anchor the end section. Completely embedding the stirrups ensures the development of the moment required to resist overturning as well as resistance to lateral movement.

For the full-scale crash test, the barrier was constructed with a footer to anchor the end section stirrups. The footer was designed following a process described by Faller [81]. This paper describes the function of the footer as providing sufficient torsion resistance to match the overturning moment of the end section. No other design loads need be applied.

To calculate the design load, the cantilever moment, M_c, was multiplied by the critical length, L, to obtain the torsion load on the footer. Both of these values can be found in Appendix B for the chosen end section configuration. The torsion load was then divided by a safety factor of Φ=0.75 to obtain the design load. The torsion strength of the concrete was subtracted out and steel reinforcement was designed to carry the remainder of the load by following the standards of ACI 318-05.

Following this procedure, the resulting footer was designed and is shown in Figure 49 and Figure 50 in SI and English units, respectively. The specific calculations are shown in Appendix C. The footer was placed 76 mm (3 in.) below the roadway surface so that the asphalt keyway could continue the entire length of the barrier, preserving uniformity. The barrier

stirrups were extended into the footer and hooked around longitudinal steel in order to obtain the necessary embedment length to fully development the strength of these bars. Remember, the design intends for the stirrups to be cast in with the footer first. The barrier is cast over the stirrups after the footer has hardened.

The footer was placed under the entire length of the end section, not just the calculated critical length. Anchoring all of the end section stirrups provides uniformity and adds a little extra strength to the barrier, making the design conservative. Thus, the length of the footer was set at 3,658 mm (12 ft) to match the length of the end section, as determined in Section 7.6.

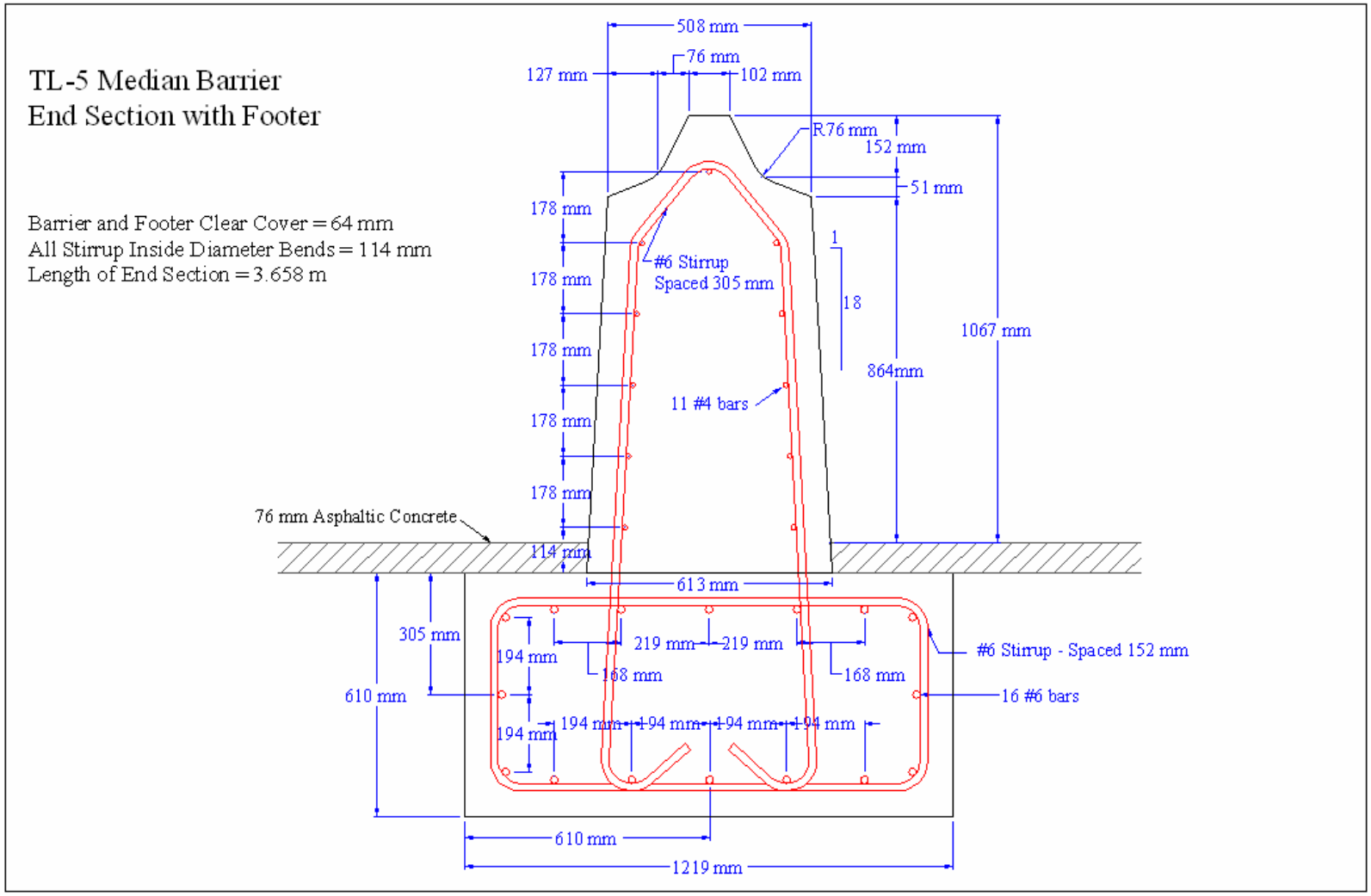

Figure 49. Footer and Barrier End Section Design

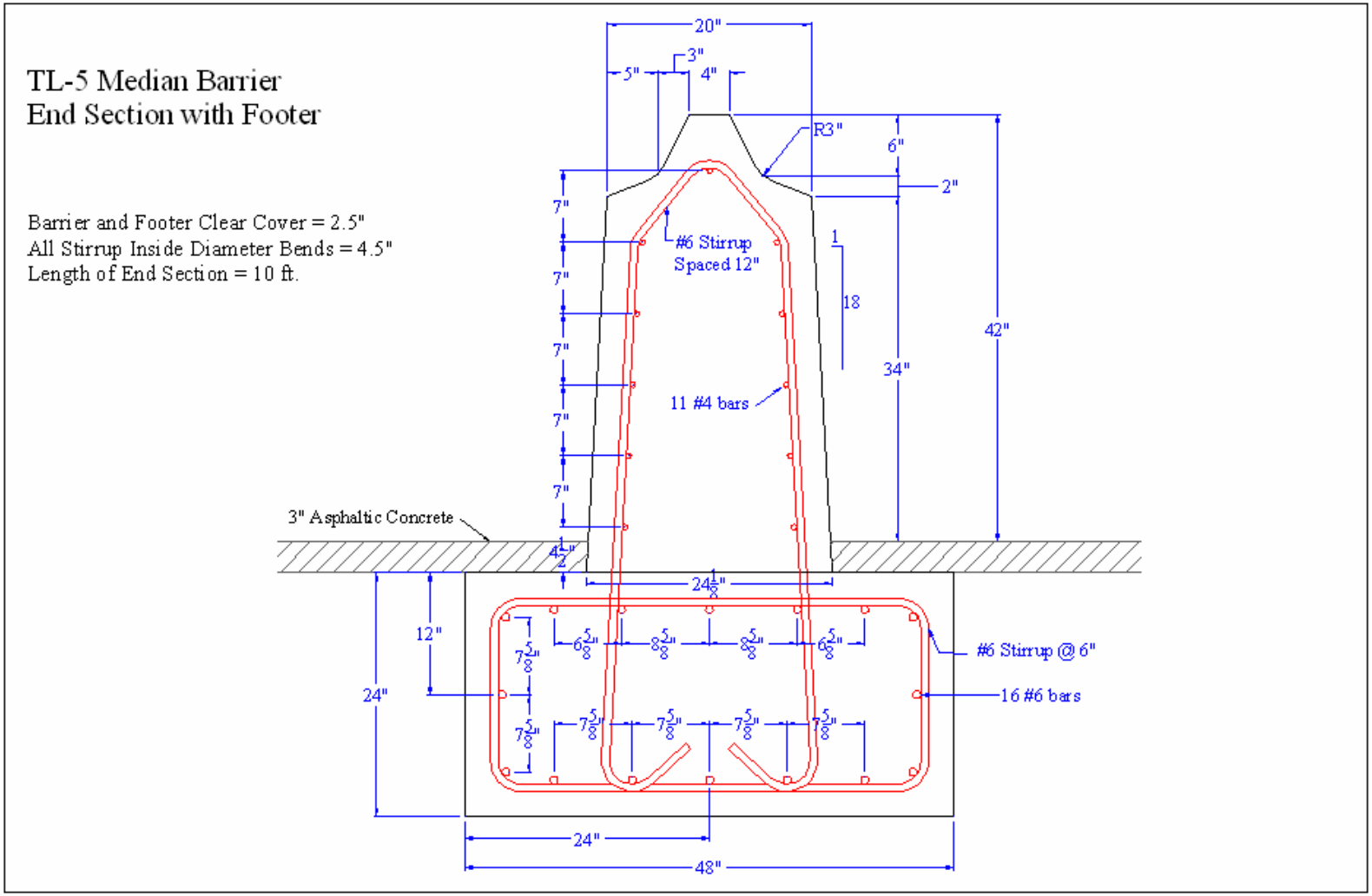

Figure 50. Footer and Barrier End Section Design (English - Units)

8 FULL-SCALE CRASH TEST PROGRAM

8.1 Test Requirements

Longitudinal barriers, such as median barriers, must satisfy the requirements provided in NCHRP Report 350 [17] to be accepted for use on the National Highway System. According to TL-5 criteria found in NCHRP Report 350, the bridge railing system must be subjected to three full-scale vehicle crash tests. The three crash tests are as follows:

I. Test Designation 5-10: An 820-kg (1,808-lb) small car impacting the median barrier system at a nominal speed and angle of 100.0 km/h (62.1 mph) and 20 degrees, respectively.

II. Test Designation 5-11: A 2,000-kg (4,409-lb) pickup truck impacting the median barrier system at a nominal speed and angle of 100.0 km/h (62.1 mph) and 25 degrees, respectively.

III. Test Designation 5-12: A 36,000-kg (79,366-lb) tractor-trailer vehicle impacting the median barrier system at a nominal speed and angle of 80.0 km/h (49.7 mph) and 15 degrees, respectively.

Although the small car and pickup truck tests are used to evaluate the overall performance of the length-of-need section and occupant risk problems arising from the snagging or overturning of the vehicle, both tests were deemed unnecessary based on previous testing of single-slope and vertical barrier systems. The California Department of Transportation, or CALTRANS, successfully conducted test no. 5-10 on an 813-mm (32-in.) tall, single-slope

barrier that was angled 9.1 degrees from vertical [40]. Also, the Texas Transportation Institute, or TTI, has successfully tested an 813-mm (32-in.) tall, vertical concrete barrier under the same small car performance criteria of NCHRP Report 350 [37]. Since the proposed test barrier has a constant slope face 864 mm (34 in.) high at an angle between these two approved systems, 3.2 degrees, an 820-kg (1,808-lb) small car crash test was considered unnecessary for this project.

In addition, TTI conducted test no. 5-11 on both an 813-mm (42-in.) tall, vertical barrier and an 813-mm (32-in.) tall, single-slope barrier with an angle of 10.8 degrees from vertical [58, 54]. Both of these systems were successfully tested under the performance requirements of NHCRP Report 350 for pickup truck impacts. Therefore, a 2,000-kg (4,409-lb) pickup truck crash test was also considered unnecessary for this project. The test conditions for TL-5 longitudinal barriers are summarized in Table 41.

Table 41. NCHRP Report 350 Test Level 5 Crash Test Conditions

Test Article	Test Designation	Test Vehicle	Impact Conditions			Evaluation Criteria [1]
			Speed		Angle (deg.)	
			(km/h)	(mph)		
Longitudinal Barrier	5-10	820C	100	62.1	20	A,D,F,H,I,K,M
	5-11	2000P	100	62.1	25	A,D,F,K,L,M
	5-12	36000V	80	49.7	15	A,D,G,K,M

[1] Evaluation criteria explained in Table 42.

8.2 Evaluation Criteria

Evaluation criteria for full-scale vehicle crash testing are based on three appraisal areas: (1) structural adequacy; (2) occupant risk; and (3) vehicle trajectory after collision. Criteria for

structural adequacy are intended to evaluate the ability of the bridge railing to contain, and redirect impacting vehicles. Occupant risk evaluates the degree of hazard to occupants in the impacting vehicle. Vehicle trajectory after collision is a measure of the potential for the post-impact trajectory of the vehicle to become involved in secondary collisions with other vehicles or fixed objects. These three evaluation criteria are defined in Table 42. The full-scale vehicle crash test was conducted and reported in accordance with the procedures provided in NCHRP Report No. 350.

Table 42. NCHRP Report No. 350 Evaluation Criteria for Crash Testing

Structural Adequacy	A.	Test article should contain and redirect the vehicle; the vehicle should not penetrate, underride, or override the installation although controlled lateral deflection of the test article is acceptable.
Occupant Risk	D.	Detached elements, fragments or other debris from the test article should not penetrate or show potential for penetrating the occupant compartment, or present an undue hazard to other traffic, pedestrians, or personnel in a work zone. Deformations of, or intrusions into, the occupant compartment that could cause serious injuries should not be permitted.
	F.	The vehicle should remain upright during and after collision although moderate roll, pitching, and yawing are acceptable.
	G.	It is preferable, although not essential, that the vehicle remain upright during and after collision.
	H.	Longitudinal and lateral occupant impact velocities should fall below the preferred value of 9 m/s (29.53 ft/s), or at least below the maximum allowable value of 12 m/s (39.37 ft/s).
	I.	Longitudinal and lateral occupant ridedown accelerations should fall below the preferred value of 15 g's, or at least below the maximum allowable value of 20 g's.
Vehicle Trajectory	K.	After collision it is preferable that the vehicle's trajectory not intrude into adjacent traffic lanes.
	L.	The occupant impact velocity in the longitudinal direction should not exceed 12 m/sec (39.37 ft/sec), and the occupant ridedown acceleration in the longitudinal direction should not exceed 20 G's.
	M.	The exit angle from the test article preferably should be less than 60 percent of test impact angle measured at time of vehicle loss of contact with test device.

8.3 Barrier Design Details

The test installation consisted of a reinforced concrete barrier anchored by an asphalt overlay on each side of the barrier system. A concrete foundation was placed at each end of the barrier in order to anchor the barrier end sections. The design details are shown in Figure 51 through Figure 55. The corresponding English-Unit drawings are shown in Appendix D. Photographs of the test installation are shown in Figure 56 through Figure 60.

8.3.1 Barrier Substructure

The TL-5 concrete median barrier was placed inside a pit measuring 60.96 m long by 6.096 m wide (200 ft by 20 ft) surrounded by concrete slabs. The barrier was situated in the pit, so that the front face was 3.61 m (11 feet – 10 in.) from the front edge of the pit as shown in Figure 51. Crushed limestone rock filled the pit until the surface was 76 mm (3 in.) below the surface of the surrounding concrete slabs. Crushed limestone was chosen to represent a weak common base material. Concrete and asphalt would provide a much stronger base support. Thus, by testing with crushed limestone, placing the barrier over any of the stronger base materials would be acceptable.

A 76-mm (3-in.) thick, asphalt overlay was placed on both the front and back sides of the barrier for its entire length. As illustrated in Figure 52 through Figure 54, the asphalt surface was flush with the surrounding concrete apron.

The barrier interior section stirrup cages were tied to dowel bars in order to hold the cages in position during casting. These dowel bars consisted of 610 mm (24 in.) long pieces of No. 4 rebar. Half the length of each dowel bar was driven into the crushed limestone pit, thus

leaving the other half exposed to attach the cages. The dowel bars were located near the quarter points along each of the barrier cages, or roughly every 1.37 m (4.5 ft), and can be seen in Figure 52, Figure 54, and Figure 57.

Footers were located under each of the barrier end sections. Both footers measured 3.66 m long by 1.22 m wide by 0.61 m deep (12 ft by 4 ft by 2 ft). The top of the footer was placed level with the crushed limestone pit allowing the asphalt overlay to be poured on top of the footer as well, preserving a uniform approach to the barrier. The concrete used for the footer was an L4000 mix consisting of 30 percent limestone and 70 percent sand-gravel and had a prescribed minimum compressive strength of 27.6 MPa (4,000 psi). The actual compressive strength measured from cylinder tests before test day, 95 days after pouring, was 38.1 MPa (5,528.9 psi). All steel reinforcement was Grade 60 rebar and was given a minimum concrete clear cover of 64 mm (2.5 in.).

Each footer was reinforced with No. 6 rebar stirrups spaced every 152 mm (6 in.) and 16 No. 6 longitudinal rebar, measuring 3,505 mm (138 in.) long, spread throughout the cross section, as shown in Figure 53. The stirrup bars were 3,416 mm (141 in.) long and were bent into a rectangular shape. Also, the barrier end section stirrups were tied to and cast within the footer reinforcement, as shown in Figure 53, and Figure 56.

8.3.2 Barrier Design

The TL-5 barrier consisted of a continuous reinforced concrete wall, as shown in Figure 60. The barrier was 60.88 m (199.75 ft) long and cast at a height of 1,143 mm (45 in.). However, the barrier height was 1,067 mm (42 in.) after the asphalt overlay was applied. The

base width and top width of the barrier were 613 mm (24.125 in.) and 102 mm (4 in.), respectively. The barrier face stood 864 mm (34 in.) above the roadway and had a 1/18 slope. Head ejection requirements prompted the upper portion of the barrier to be cut back, as shown in Figure 52 through Figure 54, and Figure 60. Concrete forms were used, and the barrier was cast in place in order to minimize test costs. As a result, the interior angle located in the top cut back of the barrier was left as a straight angle; not rounded off as recommended for slipforming operations. These two variations are depicted in Figure 52 and Figure 54.

The concrete used for the median barrier was the same as that used in the footings. The barrier was cast in place in two separate pours, approximately half the barrier was cast during each pour. The actual compressive strength of the concrete determined from cylinder testing prior to test day, 46 and 39 days after pouring, was found to be 42.9 MPa and 39.1 MPa (6,217.9 psi and 5,672.5 psi) for the first (upstream half) and second (downstream half) pours, respectively. Even though the design calculations used a concrete strength of 27.6 MPa (4,000 psi), this increase in concrete strength resulted in an increase to the calculated design strength of less than 2 percent. A minimum concrete clear cover of 64 mm (2.5 in.) was applied to all rebar placed inside the barrier. All steel reinforcement was Grade 60 rebar.

As described in Section 7.6, the barrier interior was reinforced with No. 5 rebar stirrups spaced every 457 mm (18 in.) and 11 No. 4 longitudinal bars. The stirrup bars were 2,705 mm (111.5 in.) long and were bent to fit in the barrier cross section with a clear cover of 64 mm (2.5 in.). The longitudinal rebar was 6,096 mm (240 in.) long and was positioned throughout the barrier cross section, as shown in Figure 52 and Figure 57. Stirrups and longitudinal bars were tied together to form 6.1 m (20 ft) rebar cages. Dowel bars were use to tie the cages down at

approximately every quarter point, or 1.37 m (4.5 ft). Also, lap splices measuring at least 305 mm (12 in.) long were used to connect the longitudinal steel from one cage to the next. The dowel bars and lap splices are shown in Figure 57.

The barrier end section reinforcement made up the last 3.66 m (12 ft) on each end of the barrier and consisted of different stirrups from the interior section. The end section stirrups were 3,734 mm (147 in.) long No. 6 bars bent to follow the shape of the barrier cross section. These stirrups also extended into the footings located below each end section. The longitudinal rebar remained the same as the interior section, except the 11 No. 4 bars were only 3810 mm (150 in.) in length. The end section reinforcement is shown in Figure 53 and Figure 56.

8.3.3 Impact Point

The full-scale crash test was intended to examine the interior section of the barrier. Thus, the target impact point needed to be a sufficient distance from the stronger, fully-anchored end sections, while still being far enough upstream for the vehicle to be completely redirected before it reached the downstream end of the barrier. The rear of the tractor trailer of test ACBR-1 was observed to contact the rail approximately 1.83 m (6 ft) behind the initial impact point. Adding this distance to half of the critical length calculated from the yield line analysis, 2.29 m (7.5 ft), and the length of the end section, 3.66 m (12 ft), resulted in a minimum distance of 7.77 m (25.5 ft). Thus, the impact point was chosen to be 9.14 m (30 ft) from the upstream end of the barrier, as shown in Figure 52.

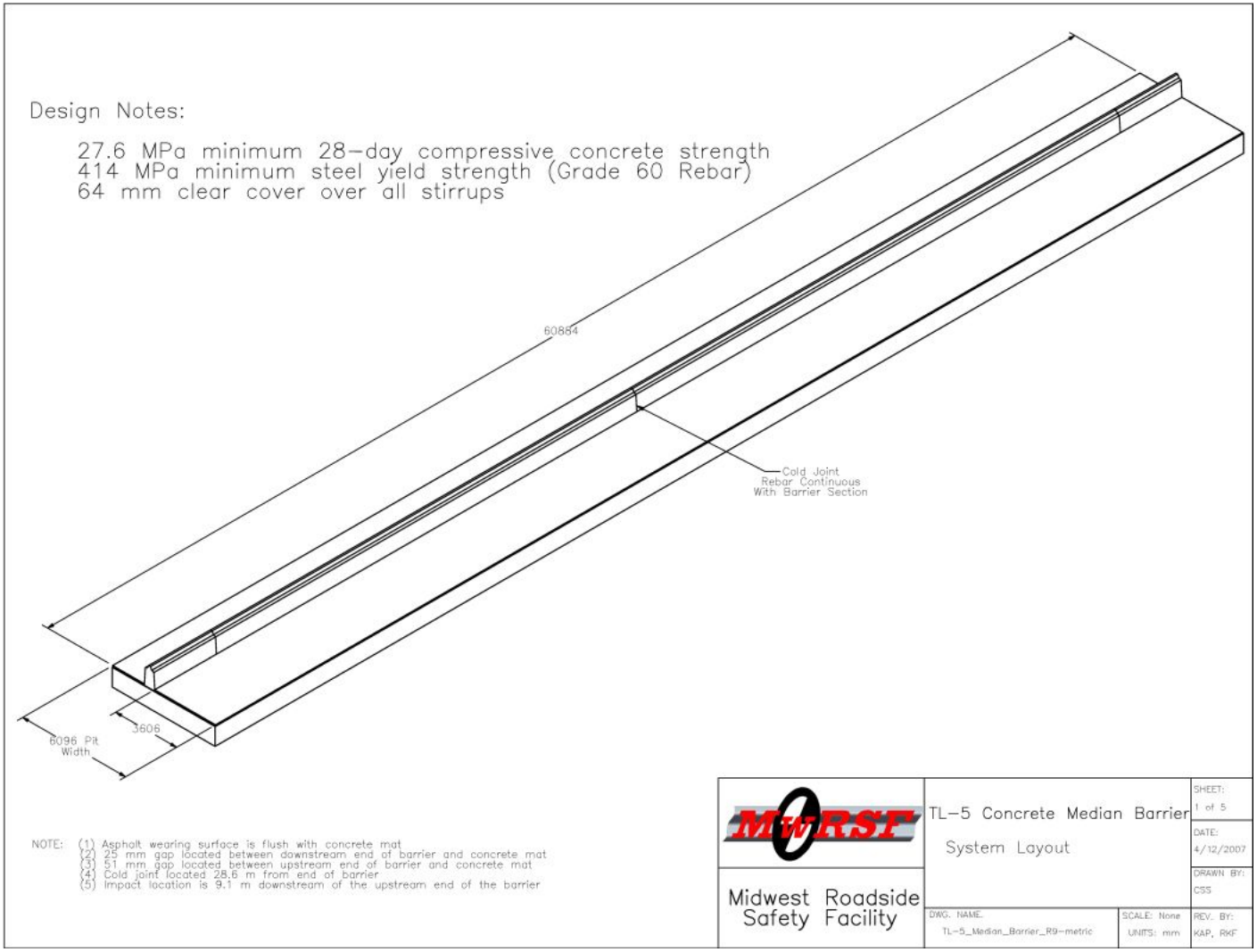

Figure 51. Layout for TL-5 Concrete Median Barrier

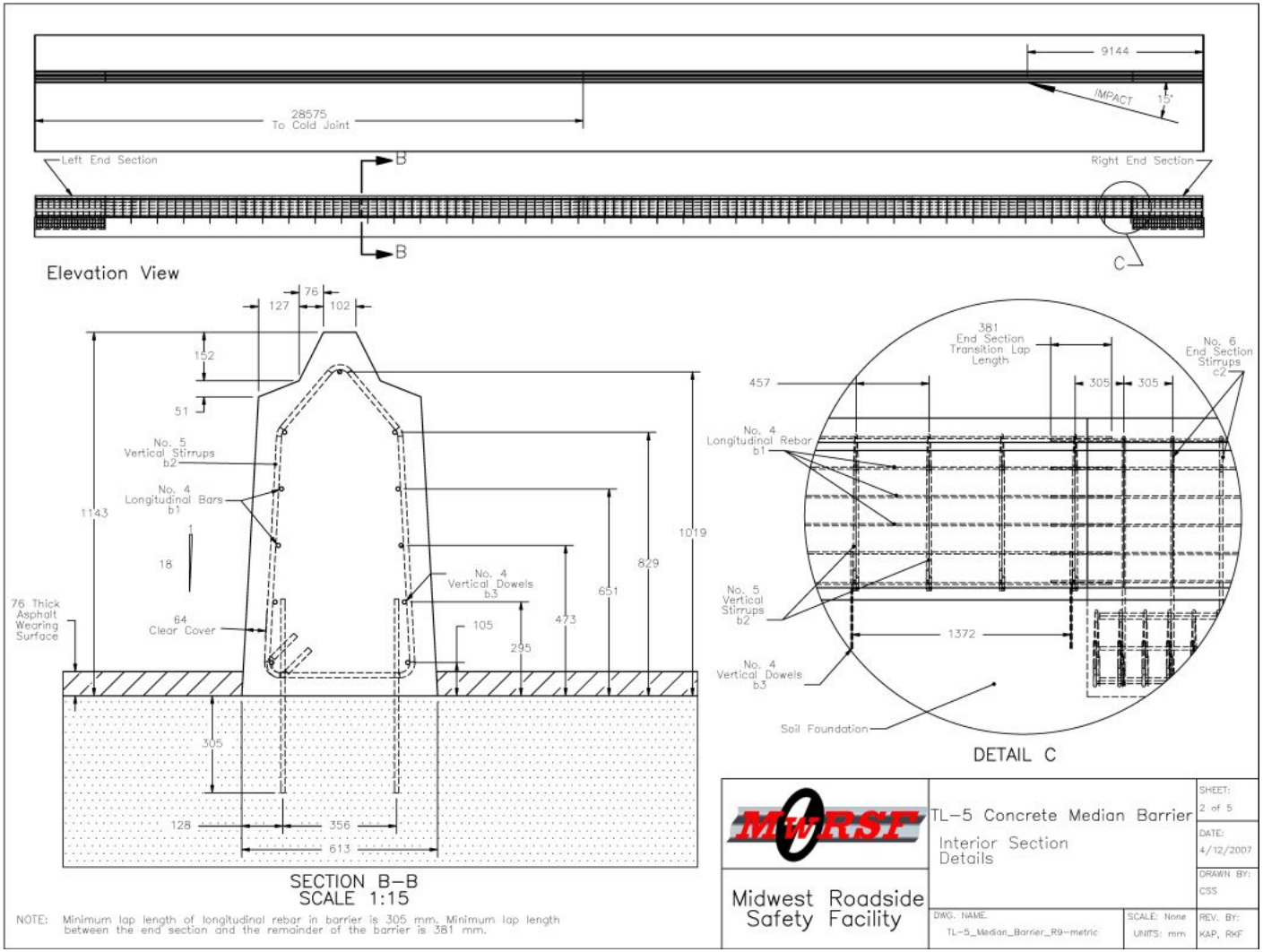

Figure 52. TL-5 Concrete Median Barrier Interior Section Design Details

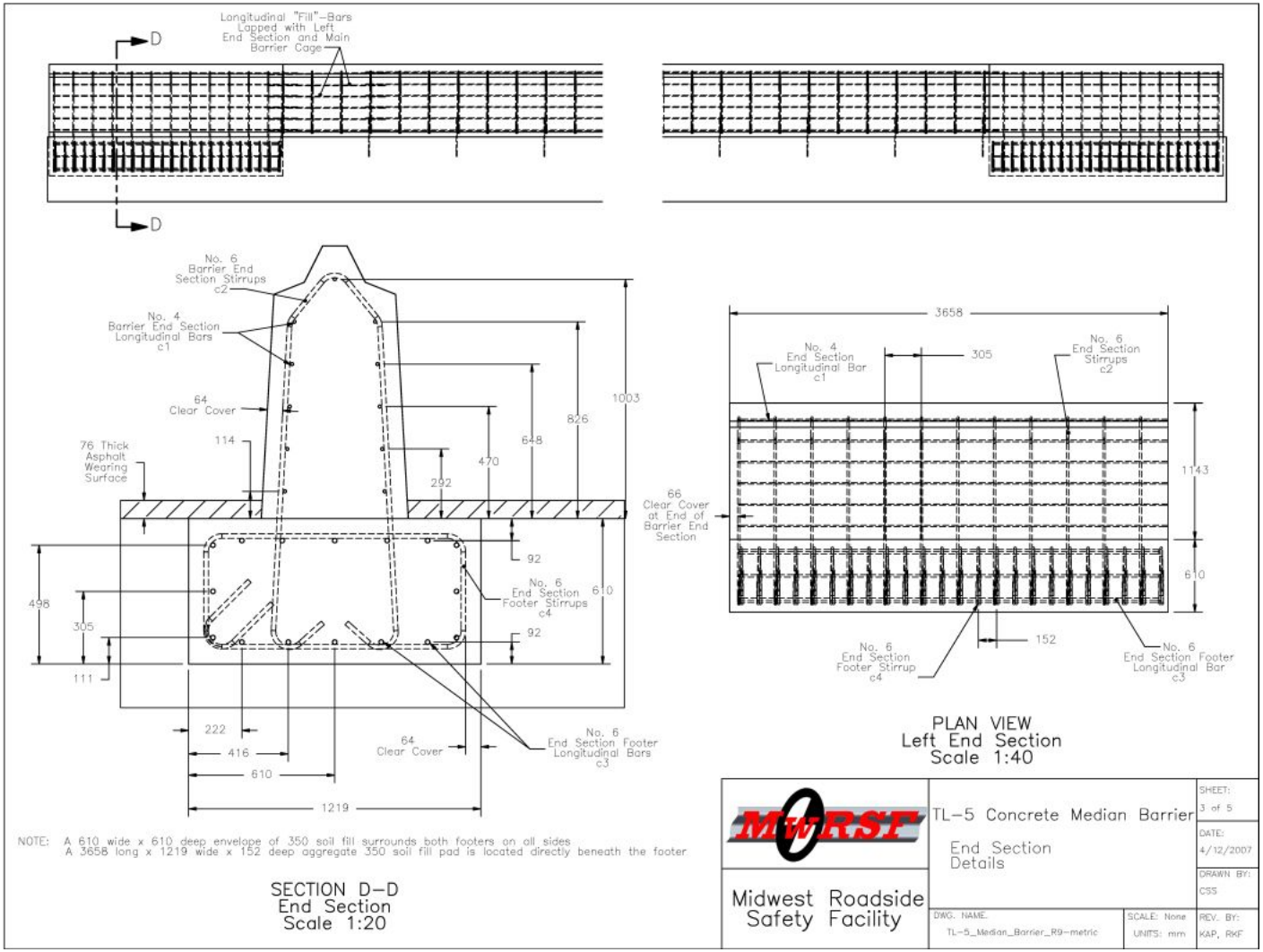

Figure 53. TL-5 Concrete Median Barrier End Section Design Details

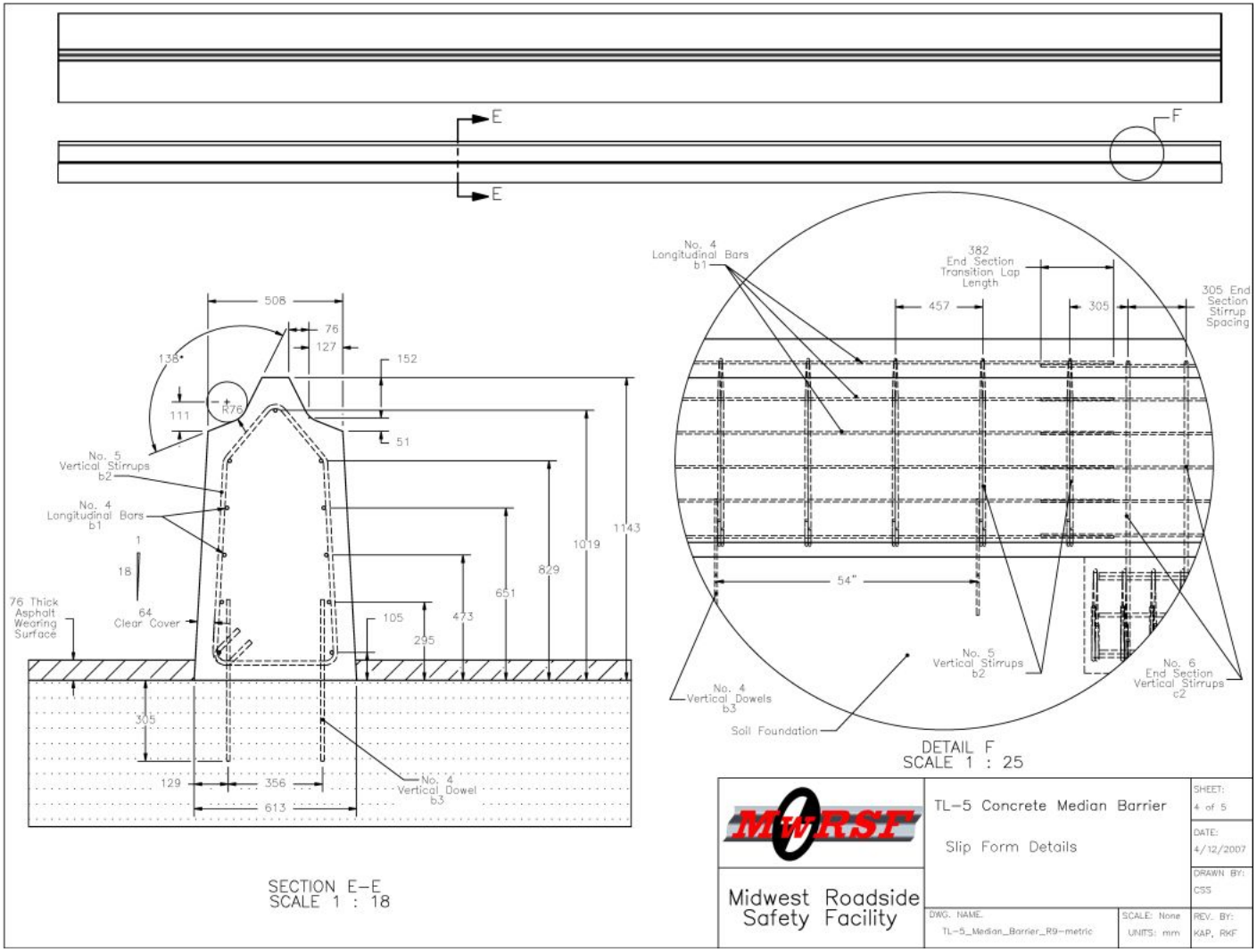

Figure 54. TL-5 Concrete Median Barrier Slipform Design Details

TL-5 Single-Slope Median Barrier – Bar Details						
Item No.	QTY.	Pin Diameter (mm)	Length (mm)	Material Spec	Bar Size	Description
b1	99	–	6096	Grade 60 Steel	No. 4	Longitudinal Bar, 11 per Section
b2	118	64	2705	Grade 60 Steel	No. 5	Vertical Stirrup
b3	80	–	610	Grade 60 Steel	No. 4	Vertical Dowel
b4	11	–	Not Less Than 1829	Grade 60 Steel	No. 4	Longitudinal "Fill" Bar, spliced with Left End Section and with remaining length of barrier section to close cage
c1	22	–	3810	Grade 60 Steel	No. 4	End Section Longitudinal Bar, 11 per End Section
c2	24	114	3734	Grade 60 Steel	No. 6	End Section Stirrup
c3	32	–	3505	Grade 60 Steel	No. 6	End Section Footer Longitudinal Bar, 16 per End Section
c4	48	114	3416	Grade 60 Steel	No. 6	End Section Footer Stirrup

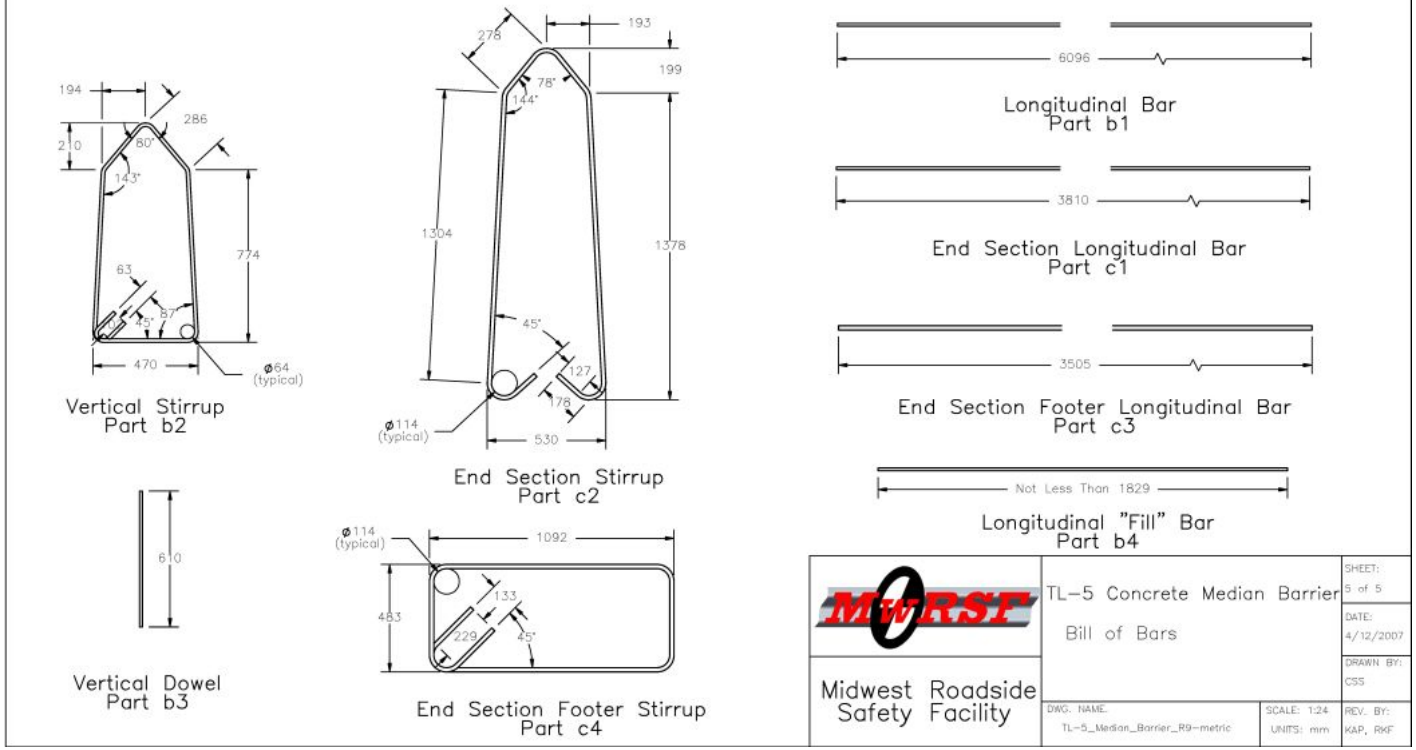

Figure 55. TL-5 Concrete Median Barrier Rebar Design Details

Figure 56. Reinforcement and Casting of Footer with Barrier End Section Stirrups

Figure 57. TL-5 Median Barrier Reinforcement, Lap Splices, and Dowel Tie Downs

Figure 58. TL-5 Median Barrier Construction

Figure 59. TL-5 Median Barrier Construction – Cold Joint

Figure 60. TL-5 Concrete Median Barrier

8.4 Test Facility

The testing facility is located at the Lincoln Air-Park on the northwest (NW) side of the Lincoln Municipal Airport and is approximately 8.0 km (5 mi.) NW of the University of Nebraska-Lincoln.

8.5 Vehicle Tow and Guidance Systems

A reverse cable tow system with a 1:2 mechanical advantage was used to propel the test vehicle. The distance traveled and the speed of the tow vehicles were one-half that of the test vehicle. The test vehicle was released from the tow cable before impact with the median barrier system. A digital speedometer was located on the tow vehicle to increase the accuracy of the test vehicle impact speed.

A vehicle guidance system developed by Hinch [82] was used to steer the test vehicle. A guide-flag, attached to the left-front wheel and the guide cable, was sheared off before impact with the median barrier system. The 9.5 mm (0.375 in.) diameter guide cable was tensioned to approximately 15.6 kN (3,500 lbf), and supported laterally and vertically every 30.48 m (100 ft) by hinged stanchions. The hinged stanchions stood upright while holding up the guide cable, but as the vehicle was towed down the line, the guide-flag struck and knocked each stanchion to the ground. The vehicle guidance system was 889 m (2,915 ft) long.

8.6 Test Vehicle

A 1991 White GMC Conventional WG65T Tractor with a 1988 Pines 48 ft Trailer was used as the test vehicle. The test inertial and gross static masses were both 36,154 kg (79,705

lbs). The test vehicle is shown in Figure 61, and vehicle dimensions are shown in Figure 62.

The longitudinal component of the center of gravity was determined using the measured axle weights. The locations of the final centers of gravity are shown in Figure 62. Vehicle ballast, consisting of steel panels, concrete barriers, and foam blocks, was used to obtain the desired test weight.

Square black and white-checkered targets were placed on the vehicle to aid in the analysis of the high-speed film, as shown in Figure 61 and Figure 63. A checkered target was placed on the roof of the trailer marking the ballast center of gravity. Other target locations included on the driver's side door, on the passenger's side door, on the roof of the vehicle, on the windshield, and on all four corners of each side of the trailer box.

The front wheels of the test vehicle were aligned for camber, caster, and toe-in values of zero so that the vehicle would track properly along the guide cable. A 5B flash bulb was mounted on the hood of the vehicle to correlate the time of impact between electronic transducers and high-speed film. The flash bulb was fired by a pressure tape switch mounted on the front face of the bumper. A remote-controlled brake system was installed in the test vehicle so the vehicle could be brought safely to a stop after the test.

Figure 61. Test Vehicle, Test TL5CMB-2

Date:	**7/12/2007**	**Test Number:**	**TL5CMB-2**		

Tractor:

VIN No.:	**4V1JLBJEGMR810558**	**Make:**	**White/GMC**	**Model:**	**WG65T**
Year:	**1991**	**Odometer:**	**137548**		

Trailer:

VIN No.:	**1P10748254JKA29485**	**Make:**	**Pines 48'**	**Model:**	**48' Van**
Year:	**1988**				

***(All Measurements Refer to Impacting Side)**

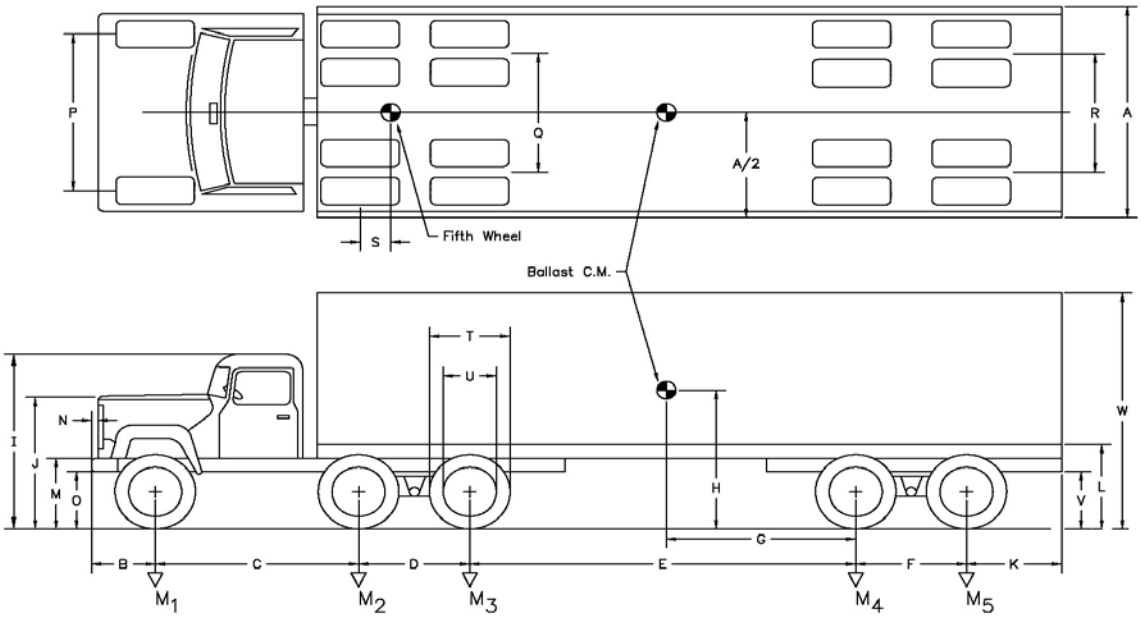

Vehicle Geometry - mm (in.)

A	2604 (102.5)	G	5906 (232.5)	N	0	T	1016 (40.)
B	1314 (51.75)	H	1831 (72.1)	O	584 (23.)	U	597 (23.5)
C	3270 (128.75)	J	1746 (68.75)	P	2007 (79.)	V	781 (30.75)
D	1334 (52.5)	K	1575 (62.)	Q	1842 (72.5)	W	4064 (160.)
E	10185 (401.)	L	1156 (45.5)	R	1981 (78.)	X	NA NA
F	1257 (49.5)	M	902 (35.5)	S	533 (21.)		

Mass - kg (lb)	**CURB**	**Test Inertial**	**Gross Static**
M_1	3,973 (8,760)	4,441 (9,790)	4,441 (9,790)
M_2	5,144 (11,340)	17,017 (37,515)	17,017 (37,515)
M_3	NA	NA	NA
M_4	NA	NA	NA
M_5	3,955 (8,720)	14,696 (32,400)	14,696 (32,400)
M_{Total}	13,073 (28,820)	36,154 (79,705)	36,154 (79,705)

Note any damage prior to test: **Normal Wear**

Figure 62. Vehicle Dimensions, Test TL5CMB-2

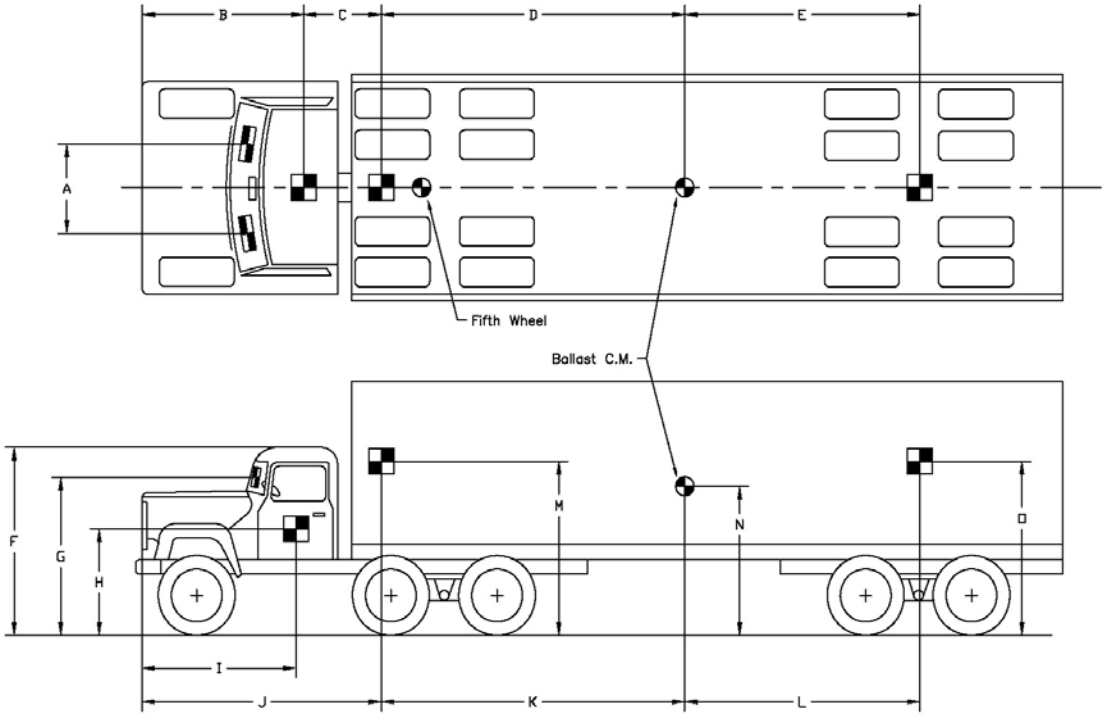

TEST #: TL5CMB-2

TARGET GEOMETRY-- mm (in.)

A	1708	(67.25)	E	7777	(306.2)	I	NA	NA	M	NA	NA
B	NA	NA	F	NA	NA	J	NA	NA	N	1842	(72.5)
C	2178	(85.75)	G	NA	NA	K	5251	(206.75)	O	1657	(65.25)
D	5390	(212.2)	H	NA	NA	L	7603	-(299.3)			

Figure 63. Vehicle Target Locations, Test TL5CMB-2

8.7 Data Acquisition Systems

8.7.1 Accelerometers

Two triaxial piezoresistive accelerometer systems, described below, were used to measure the acceleration in the longitudinal, lateral, and vertical directions.

Principle EDR:

Model EDR-4M6 – Instrumented Sensor Technology (IST) of Okemos, MI

± 200 G's

10,000 Hz Sample Rate

3 Differential Channels, 3 Single-Ended Channels

6 Mb RAM Memory

1,500 Hz lowpass filter

Secondary EDR:

Model EDR-3 – Instrumented Sensor Technology (IST) of Okemos, MI

± 200 G's

3,200 Hz Sample Rate

256 Kb RAM Memory

1,120 Hz lowpass filter

The principle EDR was mounted near the trailer tandems, while the secondary EDR was mounted near the tractor tandems. Computer software "DynaMax 1 (DM-1)" and "DADiSP," was used to analyze and plot the accelerometer data.

8.7.2 Rate Transducers

An Analog Systems 3-axis rate transducer with a range of 1,200 degrees/sec in each of the three directions (pitch, roll, and yaw) was used to measure the rates of motion of the test vehicle. The rate transducer was mounted inside the body of the EDR-4M6 and recorded data at 10,000 Hz to a second data acquisition board inside the EDR-4M6 housing. The raw data measurements were then downloaded, converted to the appropriate Euler angles for analysis, and plotted. Computer software, "DynaMax 1" and "DADiSP," was used to analyze and plot the rate transducer data.

8.7.3 High Speed Photography

For test TL5CMB-2, four AOS high-speed video cameras with operating speeds of 500 frames/sec were used to film the crash test. Two Canon digital video cameras and four JVC digital video cameras, all with a standard operating speed of 29.97 frames/sec, were also used to film the crash test. A high-speed AOS video camera (with a 12.5-mm lens) and a Canon digital video camera were placed above the test installation to provide a field of view perpendicular to the ground. A JVC digital video camera and a high-speed AOS video camera were placed downstream from the impact point and had a field of view parallel to the barrier. A high-speed AOS video camera and a JVC digital video camera were placed downstream from the impact point and behind the barrier so that the views were parallel with the vehicle approach path. A high-speed AOS video camera and a JVC digital video camera were placed upstream from the impact point and had a field of view parallel to the barrier. A JVC digital camera was placed upstream of the impact point and held a view parallel to the vehicle approach path. A Cannon

digital video camera was placed on the traffic side of the barrier and had a field of view perpendicular to the barrier. A schematic of all ten camera locations for test TL5CMB-2 is shown in Figure 64. The high speed AOS video and standard digital video were analyzed using the ImageExpress MotionPlus software and Redlake Motion Scope software, respectively.

8.7.4 Pressure Tape Switches

For test TL5CMB-2, five pressure-activated tape switches, spaced at 2 m (6.56 ft) intervals, were used to determine the speed of the vehicle before impact. Each tape switch fired a strobe light which sent an electronic timing signal to the data acquisition system as the left-front tire of the test vehicle passed over it. Test vehicle speed was determined from electronic timing mark data recorded using the "DADiSP" software. Strobe lights and high-speed film analysis are used only as a backup in the event that vehicle speed cannot be determined from the electronic data.

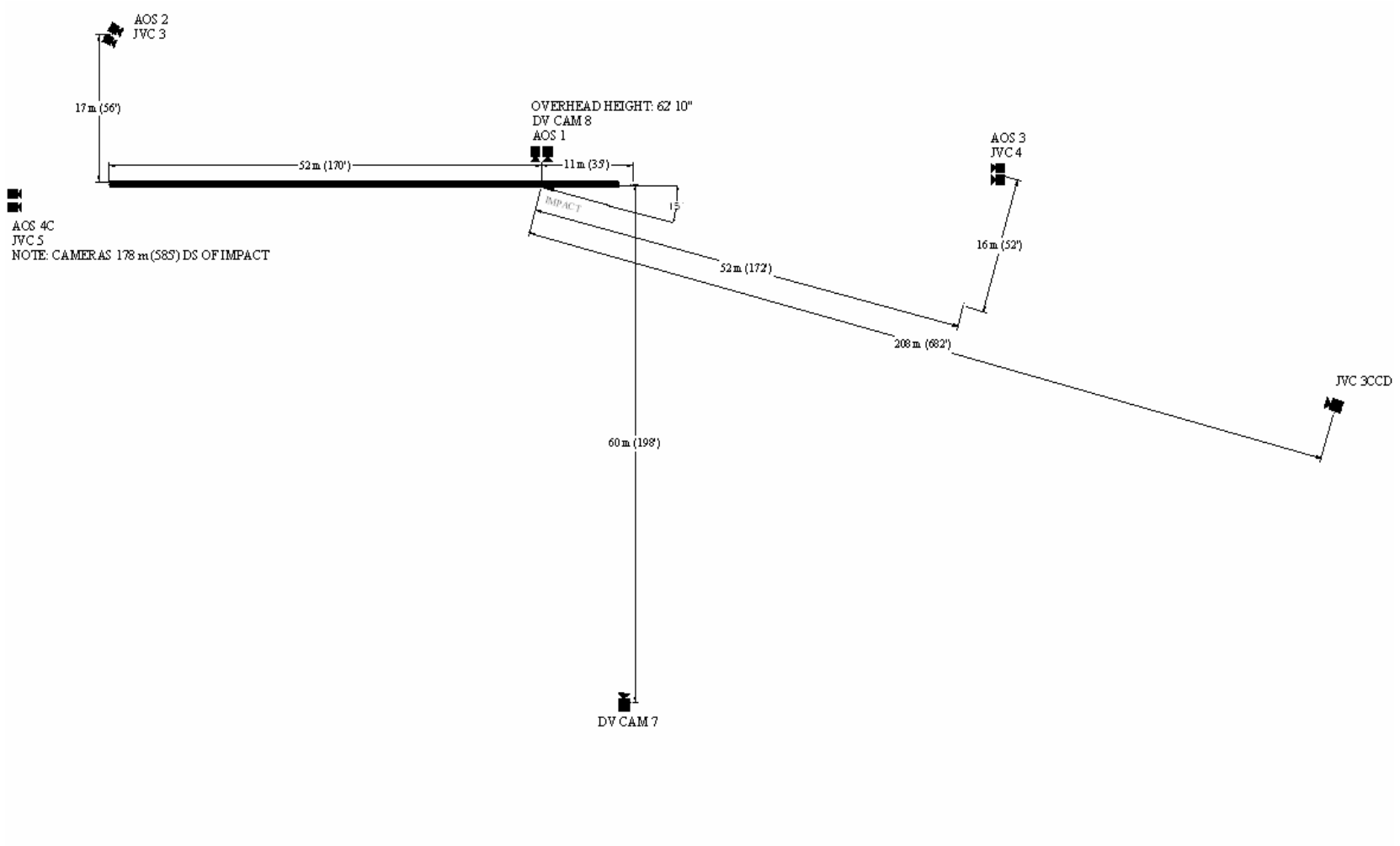

Figure 64. Location of Cameras, Test TL5CMB-2

8.8 Crash Test TL5CMB-2

The 35,956-kg (79,705-lb) tractor trailer impacted the concrete median barrier at a speed of 84.9 km/h (52.7 mph) and an angle of 15.4 degrees. A summary of the test results and sequential photographs are shown in Figure 65. The summary of the test results and sequential photographs in English-units are shown in Appendix E. Additional sequential photographs are shown in Figure 66 through Figure 70.

8.8.1 Test Description

Initial vehicle impact occurred approximately 9.1 m (30 ft) from the upstream end of the barrier, as shown in Figure 71. Shortly afterward, the right-front fender began to crush. At 0.024 seconds after impact, the tractor began to yaw away from the barrier. At 0.033 sec, the right-front corner of the engine hood contacted the top protrusion of the barrier. At the same time, the right-front wheel was pushed rearward. At 0.038 sec, the right-front fender began to lift and rotate forward, while the tractor started to roll into the barrier. At 0.046 sec, the left-front tire turned toward the barrier. At 0.058 sec, the vehicle hood began to lift and rotate forward. At 0.154 sec, the left-front tractor tire lifted off of the concrete surface. At this same time, the hood and bumper were severely crushed. At 0.186 sec, the right-front corner of the trailer contacted the top protrusion of the barrier. At 0.190 sec, the trailer started to roll toward and yaw away from the barrier while it rode on the top of the barrier. By 0.256 sec, the vehicle's hood had risen up to block the windshield from a downstream viewpoint. At 0.260 sec, the right-front corner of the trailer was vertically coincident with the back face of the barrier. At 0.276 sec. the bottom and right-front corner of the trailer was crushed while it leaned heavily toward the

barrier. At 0.394 sec, both right-rear trailer tires were lifted from the ground. At 0.414 sec, the tractor reached a maximum positive roll and began to roll back away from the barrier. At 0.426 sec, the left-rear tires were lifted off the ground. At 0.494 sec, the left-front tractor tires returned to the roadway surface. At 0.54 sec, the tractor was parallel to the barrier while still leaning toward it. At 0.604 sec, sparks were visible as the right-front corner of the trailer slid along the top cutout edge of the barrier. At 0.648 sec, the trailer was parallel with the barrier. At this same time, the trailer's right-rear corner impacted the face of the barrier. At 0.650 sec, the tractor has rolled back to a level position. At 0.668 sec, the trailer frame began to twist clockwise. At 0.776 sec, the tractor started to roll toward the barrier, and by 0.956 sec, the left-front tire had been again lifted from the roadway surface. At 1.154 sec, the vehicle hood had rotated all the way forward and contacted the roadway surface. At 1.15 sec, the trailer reached its maximum roll over the barrier, 22.8 degrees, and began to roll back away from the barrier. At this same time, all left-side tires were in the air. At 1.294 sec, the left-front tire returned to the roadway surface. At 1.696 sec, the left-front side tandem tires re-contacted the roadway surface. The vehicle continued to ride down the barrier face for the entire length of the barrier until it finally passed the downstream end approximately 2.9 seconds after the initial impact. The vehicle came to rest after rolling through two rows of temporary concrete barriers positioned downstream of the system. This secondary impact caused further damage to the tractor. Specifically, the left side of the tractor and the rear tractor axles received heavy damage not present as the vehicle left the barrier. The final resting place of the vehicle was 92 m (302 ft) downstream from the downstream end of the barrier and 46 m (151 ft) laterally behind the barrier system. The trajectory and final position of the tractor trailer are shown in Figure 65 and Figure 72.

8.8.2 Barrier Damage

Damage to the concrete median barrier was minimal, as shown in Figure 73 through Figure 84. Barrier damage consisted of contact and gouge marks to the barrier face, barrier cracking, and spalling of the concrete. The vehicle contacted the barrier from the point of impact, 9.1 m (30 ft) from the upstream end, all the way to the downstream end, 52 m (170 ft) from impact. All points in the following description were measured from the upstream end of the barrier.

Tire contact marks from the right-front tractor tire began at 9.8 (32 ft), while tire marks from the rear tandems began at 7.6 m (25 ft). These tire marks continued down the barrier to 18.3 m (60 ft), as shown in Figure 73. Gouging also took place throughout this region of the barrier face. A 254-mm wide by 254-mm tall by 13-mm deep (10 x 10 x 0.5-in.) gouge was found at 9.8 m (32 ft). Also, an arcing gouge measuring 6 mm (0.25 in.) deep was located from 10 to 11 m (33 to 36 ft). Finally, a straight, horizontal gouge measuring 13 mm (0.5 in.) deep was found from 11 to 12.2 m (36 to 40 ft). The gouges found in the face of the concrete barrier are shown in Figure 80.

Farther upstream, two long diagonal cracks and another gouge in the concrete were found, as shown in Figure 74. The 0.8 m (30 in.) long gouge was found at 6.4 m (21 ft) and was caused by the initial contact of the bottom, rear, right corner of the trailer. The cracks were the result of the impact load applied to the barrier when the trailer rear tandems impacted the barrier. Both cracks started at the bottom of the front face and finished on the back side of the barrier while taking the shape of upstream yield line cracks, as discussed in Section 7.4. The first crack, located at 4.6 m (15 ft), was a hairline crack that stopped on the back side of the top protrusion,

as shown in Figure 75. This crack, along with most of the others, was colored red in the photographs to better illustrate the length and shape of the crack. The second crack, at 5.8 m (19 ft), was approximately 2 mm (1/16 in.) wide and extended all the way to the asphalt surface on the back of the barrier. This crack caused small pockets of spalling along its length, the largest of which was located on the back side of the top protrusion. This was the largest crack in the barrier and is illustrated in Figure 76.

Two more hairline cracks were found in the barrier at 8.4 and 8.7 m (27.5 and 28.5 ft). The crack at 8.4 m (27.5 ft) began on the front of the top barrier protrusion and extended all the way to the base of the barrier on the back side. The crack at 8.7 m (28.5 ft) began 0.8 m (30 in.) above the roadway surface on the front of the barrier and concluded 0.8 m (30 in.) above the ground on the back of the barrier. Also, another gouge in the concrete was found just upstream of these cracks on the barrier's front face. The cracks and the gouge are shown in Figure 77.

A single, hairline crack was found on the back of the barrier at 12.2 m (40 ft), as shown in Figure 78. This vertical crack extended from the inside angle of the top protrusion down to 76 mm (3 in.) shy of the asphalt surface.

The final hairline cracks were shaped similar to downstream yield line cracks and originated from a pre-existing vertical crack at 15.8 m (52.5 ft), as shown in Figure 79. The first crack in this group was located on the front face of the barrier and extended diagonally from the bottom of the barrier to meet the pre-existing crack 0.7 m (28 in.) above the asphalt surface. Next, a 102-mm (4-in.) long crack was found extending downstream and upward from the pre-existing crack on the front face of the top protrusion. Another 102-mm (4-in.) long crack was found extending downstream from the pre-existing crack on the top of the barrier protrusion.

One final crack measuring 254 mm (10 in.) long was found extending downstream and downward on the back face of the top barrier protrusion.

The top barrier protrusion was left with many contact marks, gouges, and instances of concrete spalling as a result of the trailer box riding down it during impact, as shown in Figure 81 and Figure 82. This concrete surface damage was minor at first, between 9.4 and 12.2 m (31 and 40 ft), but became heavier farther downstream and between 12.2 and 15.2 m (40 and 50 ft). The worst of this damage occurred to the top front edge of the barrier between 12.8 and 14.0 m (42 and 46 ft) where the gouging and spalling was approximately 76 to 102 mm (3 to 4 in.) in width. Contact marks from the trailer box on the top protrusion continued with much less severity until 33.5 m (110 ft).

Although the initial tire marks concluded at 18.2 m (60 ft), more tire marks began at 25.3 m (83 ft) and continued down to the end of the barrier, as shown in Figure 83. Mixed in with these contact marks were occasional gouges in the concrete. The only substantial gouge was 254 mm (10 in.) long and 13 mm (0.5 in.) deep located halfway up the barrier front face at 35.7 m (117 ft).

Finally, small gaps were found between the front of the barrier and the asphalt near the impact point. These gaps were only a few millimeters (1/16 – 1/8 in.) wide, but provide evidence that the barrier did experience some dynamic movement or rotation during impact. These gaps are shown in Figure 84.

8.8.3 Vehicle Damage

Vehicle damage was moderate, as shown in Figure 85. The hood and both front fenders were disengaged and ended up in pieces below the rear trailer tandems. The front bumper was disengaged from the right frame horn, and the attaching bolts were all sheared off. The front bumper was also bent around both the right and left-frame horns. The right-frame horn was buckled inward and twisted clockwise, as shown in Figure 86.

The front tractor axle was rotated and pushed backward, leaving the right-front tire underneath the cab, as shown in Figure 87. All four of the right-front spring hangar attachment bolts were disengaged. The right-front U-bolt axle attachment was bent and broken in multiple places and was pushed to the rear end of the spring. The bolts attaching the right-front shock absorber to the frame and the spring were both bent. Also, the right-front corner of the cab contained significant scraping and gouging. Occupant compartment deformations were negligible. The tread was separated from the right-front tire, and the tire nuts and bolts were ground down.

The right-side gas tank was completely removed and came to rest approximately 15 m (50 ft) from the vehicle, as shown in Figure 88. The gas tank was crushed in several places and was punctured on one side. The gas tank mounting assembly and running boards were crushed and twisted severely. The front mounting arm was torn and twisted downstream.

The left-front tire was pushed forward as a result of the front axle rotating as previously described. The tire was also flat and separated from the rim, as shown in Figure 89. The left-side gas tank was crushed on the inward side and rotated so that the front of the tank was touching the ground. The tank mounting arms were bent and twisted, and the middle mounting

arm was the only arm which remained attached to the tank. The running board was disengaged on the rear end and buckled in the middle.

The front axle of the tractor tandems was disengaged from the tractor frame, rotated so that the right side was rearward and the left side was forward, and came to rest underneath the rear axle of the tractor tandems, as shown in Figure 90. The front axle of the tandems was only attached to the tractor by hoses. The front axle's right rim was bent in multiple places, and the left rim had one side bent. Both tires on the right side of the front axle were flat, and the outermost tire was separated from the rim. The rear axle of the tractor tandems suffered much less damage but was still rotated so that the right side was farther forward than the left. Because the rear axle was on top of the front axle, the left-rear tires were suspended in the air. Also, the drive shaft was disengaged and was found laying on the ground next to the vehicle.

The trailer had scrapes and gouges on its right side from leaning on the top of the barrier, as shown in Figure 91. These scrapes and gouges were in a straight line beginning 533 mm (21 in.) above the bottom at the front of the box and finishing 229 mm (9 in.) above the bottom at the rear of the box. Many of the vertical ribs on the side of the trailer box were torn open or even torn off the trailer box. The right side of the box was bowed outward due to the slight shifting of the ballast, as shown in Figure 92. Finally, the lower right corner bracket at the back of the trailer was fractured and bent downward.

8.8.4 Accelerometer and Rate Transducer Data

Unfortunately, the secondary EDR did not record any data during the impact. It is believed that the sensitivity was set too low, thus causing the EDR to trigger prematurely and fill

up the recorders memory buffer. Thus, all electronic data recorded during the test came from the primary EDR located near the rear trailer tandems. Recognizing that (1) occupant impact velocities (OIVs) and occupant ridedown accelerations (ORDs) are not required by NCHRP Report 350 for evaluating tractor trailer impacts and (2) the EDR data was recorded at the rear of the trailer rendering the data irrelevant to the occupant compartment, the OIV and ORD values were not computed for test TL5CMB-2. The recorded data is shown graphically in Appendix F.

8.8.5 Discussion

The analysis of the test results for test TL5CMB-2 showed that the concrete median barrier adequately contained and redirected the vehicle without permanent displacements of the barrier. There were no detached elements nor fragments of which showed potential for penetrating the occupant compartment nor presented undue hazard to other traffic. Deformations of, or intrusion into, the occupant compartment that could have caused serious injury did not occur. The test vehicle did not penetrate nor ride over the barrier and remained upright during and after the collision. Vehicle roll, pitch, and yaw angular displacements were noted, see Appendix F, and were deemed acceptable because they did not adversely influence occupant risk safety criteria nor cause rollover. After collision, the vehicle rode down the face of the barrier and did not intrude into adjacent traffic lanes. Thus, the vehicle's exit angle was less than 60 percent of the impact angle. Therefore, test TL5CMB-2 conducted on a concrete median barrier was determined to be acceptable according to the TL-5 safety performance criteria found in NCHRP Report 350. Note, the test also satisfies all evaluation criteria for test 5-12 found in the

Update to NCHRP Report 350 [75]. A summary of the safety performance evaluation is provided in Table 43.

Table 43. Summary of Safety Performance Evaluation Results

Evaluation Factors	Evaluation Criteria	Test TL5CMB-2
Structural Adequacy	A. Test article should contain and redirect the vehicle; the vehicle should not penetrate, underride, or override the installation although a controlled lateral deflection of the test article is acceptable.	S
Occupant Risk	D. Detached elements, fragments or other debris from the test article should not penetrate or show potential for penetrating the occupant compartment, or present an undue hazard to other traffic, pedestrians, or personnel in a work zone. Deformations of, or intrusions into, the occupant compartment that could cause serious injuries should not be permitted.	S
	G. It is preferable, although not essential, that the vehicle remain upright during and after collision.	S
Vehicle Trajectory	K. After collision it is preferable that the vehicle's trajectory not intrude into adjacent traffic lanes.	S
	M. The exit angle from the test article preferably should be less than 60 percent of test impact angle measured at time of vehicle loss of contact with test device.	S

S - Satisfactory
M - Marginal
U - Unsatisfactory
NA - Not Available

0.000 sec | 0.152 sec | 0.224 sec | 0.260 sec | 0.650 sec

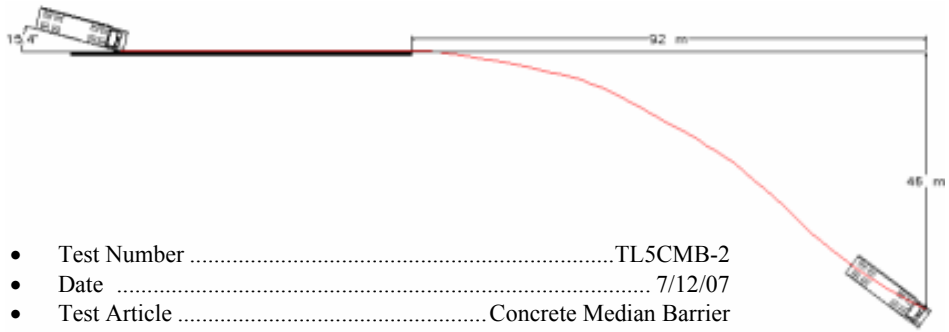

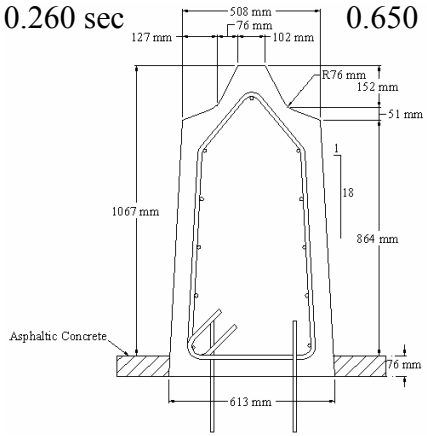

- Test Number TL5CMB-2
- Date 7/12/07
- Test Article .....Concrete Median Barrier
  - Impact Location.....9.1 m from Upstream End
- Concrete Material.....Nebraska L4000 mix
- Reinforcing Steel Material ..... Grade 60 Rebar
- Concrete Barrier
  - Length ..... 60.9 m
  - Base Width ..... 613 mm
  - Height Above Surface ..... 1,067 mm
  - Total Height..... 1,143 mm
- Concrete Footers
  - Length ..... 3,658 mm
  - Width..... 1,219 mm
  - Thickness..... 610 mm
- Asphalt
  - Thickness..... 76 mm
- Vehicle Model..... 1991 White GMC Tractor
  - ..... with 1988 Pines 48' Trailer
  - Curb.....13,072 kg
  - Test Inertial .....36,154 kg
  - Gross Static .....36,154 kg
- Vehicle Speed
  - Impact..... 84.9 km/h
  - Exit.....NA
- Vehicle Angle
  - Impact ..... 15.4 deg
  - Exit.....NA
- Vehicle Stability .....Satisfactory
- Occupant Ridedown Deceleration (10 msec avg.)
  - Longitudinal.....NA
  - Lateral .....NA
- Occupant Impact Velocity
  - Longitudinal.....NA
  - Lateral .....NA
- Vehicle Damage .....Moderate
  - TAD .....1-RFQ-5 and 1-RD-5
  - SAE ..... 1-FREN4 and 1-RDES1
- Vehicle Stopping Distance..... 143 m downstream of impact
- Test Article Damage.....Minimal
- Maximum Deflection
  - Permanent Set .....NA
  - Dynamic .....38 mm
- Working Width.....1894 mm

Figure 65. Summary of Test Results and Sequential Photographs, Test TL5CMB-2

0.000 sec

0.696 sec

0.190 sec

0.812 sec

0.414 sec

0.996 sec

0.614 sec

1.224 sec

Figure 66. Additional Sequential Photographs, Behind, Test TL5CMB-2

0.000 sec

0.186 sec

0.034 sec

0.276 sec

0.072 sec

0.426 sec

0.146 sec

0.648 sec

Figure 67. Additional Sequential Photographs, Upstream, Test TL5CMB-2

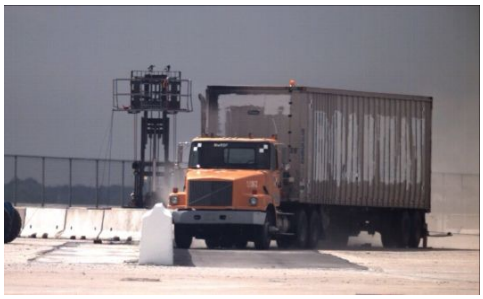

0.000 sec

0.494 sec

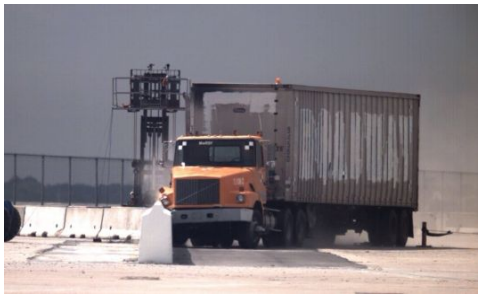

0.060 sec

0.636 sec

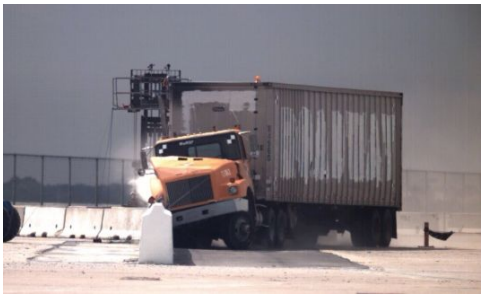

0.154 sec

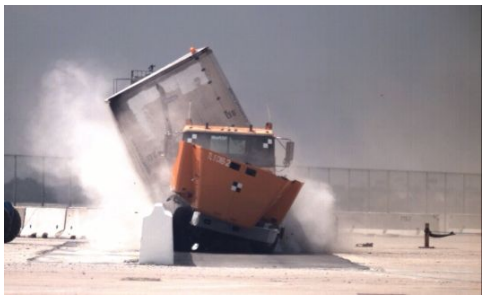

0.776 sec

0.394 sec

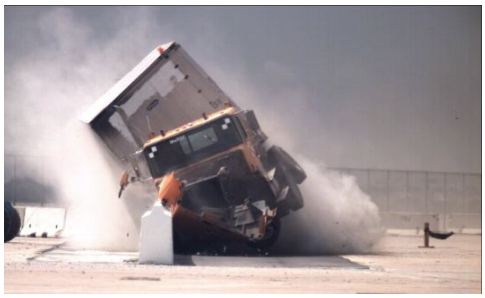

1.154 sec

Figure 68. Additional Sequential Photographs, Downstream, Test TL5CMB-2

0.000 sec

0.467 sec

0.100 sec

0.601 sec

0.200 sec

0.734 sec

0.334 sec

0.968 sec

Figure 69.Additional Sequential Photographs, Behind, Test TL5CMB-2

0.000 sec

0.300 sec

0.133 sec

0.534 sec

0.234 sec

0.868 sec

0.400 sec

1.268 sec

0.567 sec

2.035 sec

Figure 70. Additional Sequential Photographs, Test TL5CMB-2

Figure 71. Impact Location, Test TL5CMB-2

Figure 72. Vehicle Final Position and Trajectory Marks, Test TL5CMB-2

Figure 73. Barrier Damage, Test TL5CMB-2

Figure 74. Barrier Cracks Upstream of Impact, Test TL5CMB-2

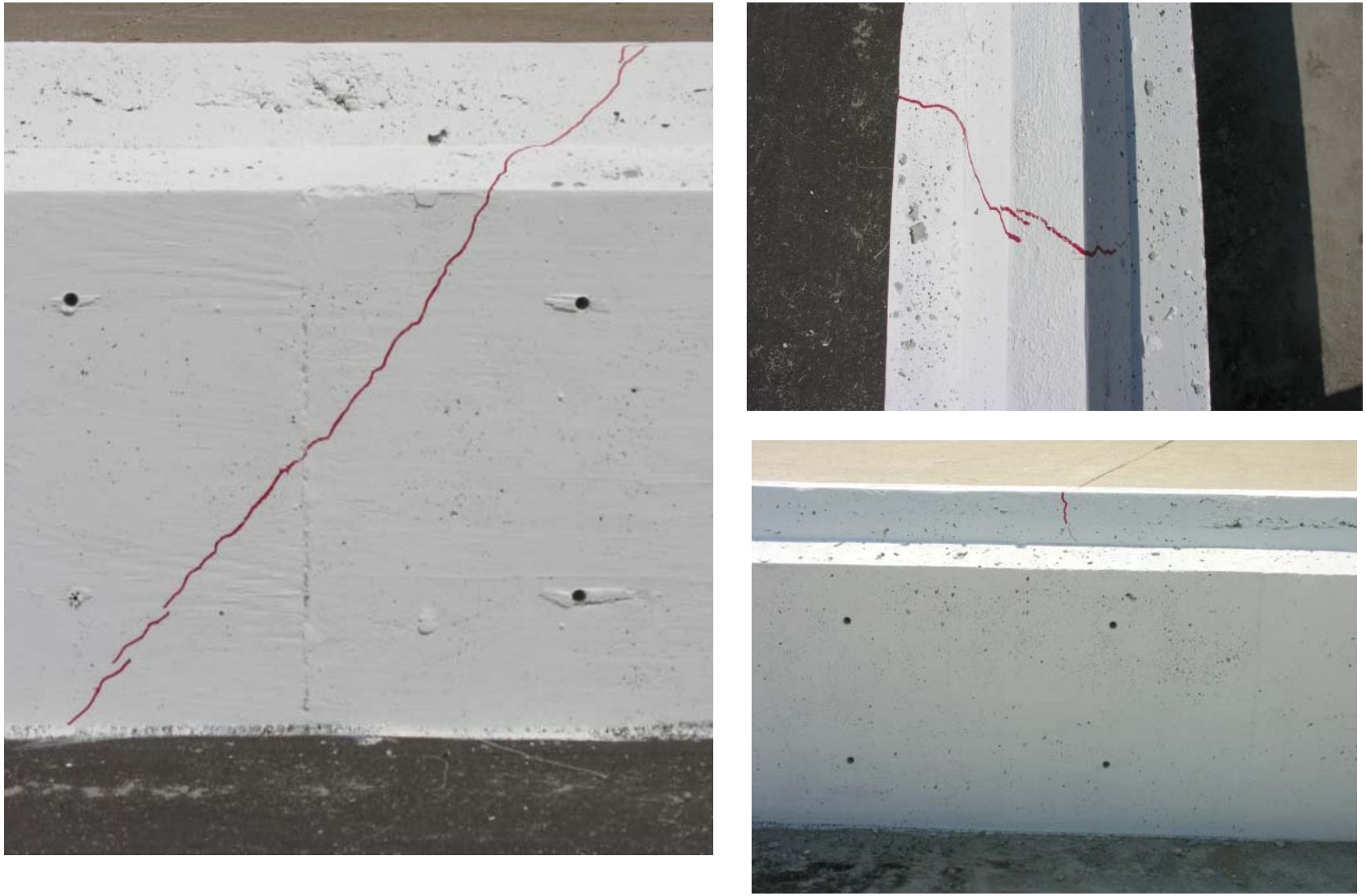

Figure 75. Barrier Cracks 4.6 m (15 ft) from Upstream End, Test TL5CMB-2

Figure 76. Barrier Cracks 5.8 m (19 ft) from Upstream End, Test TL5CMB-2

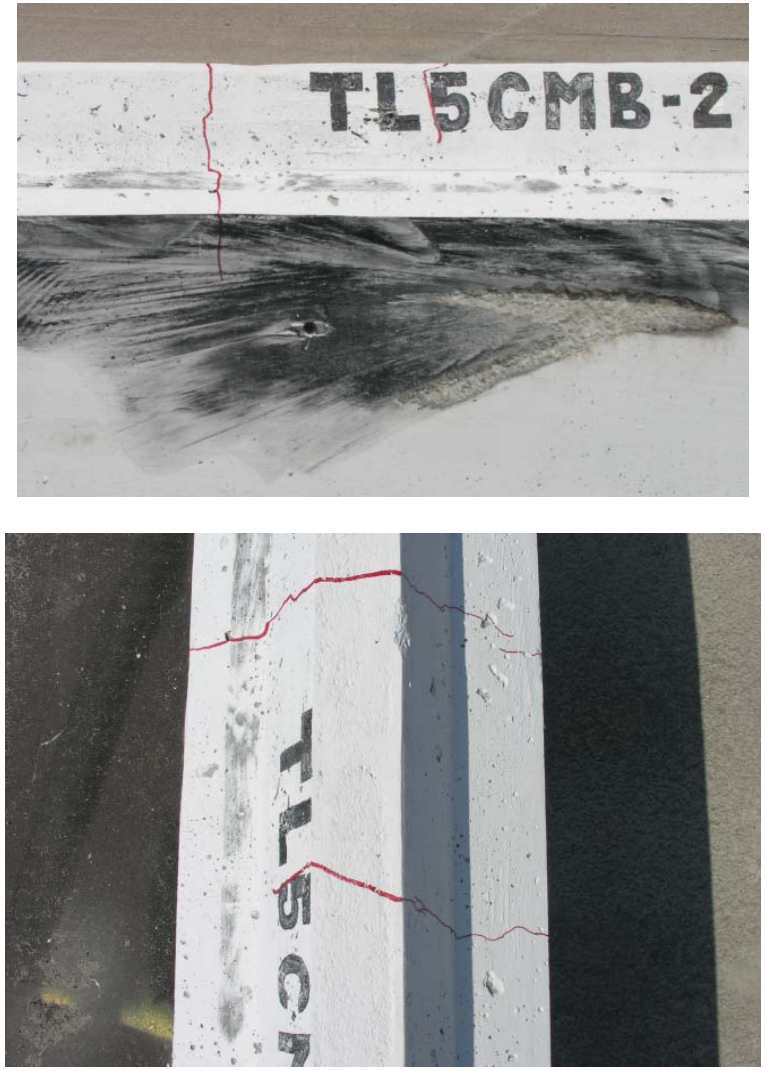

Figure 77. Barrier Cracks 8.4 and 8.7 m (27.5 and 28.5 ft) from Upstream End, Test TL5CMB-2

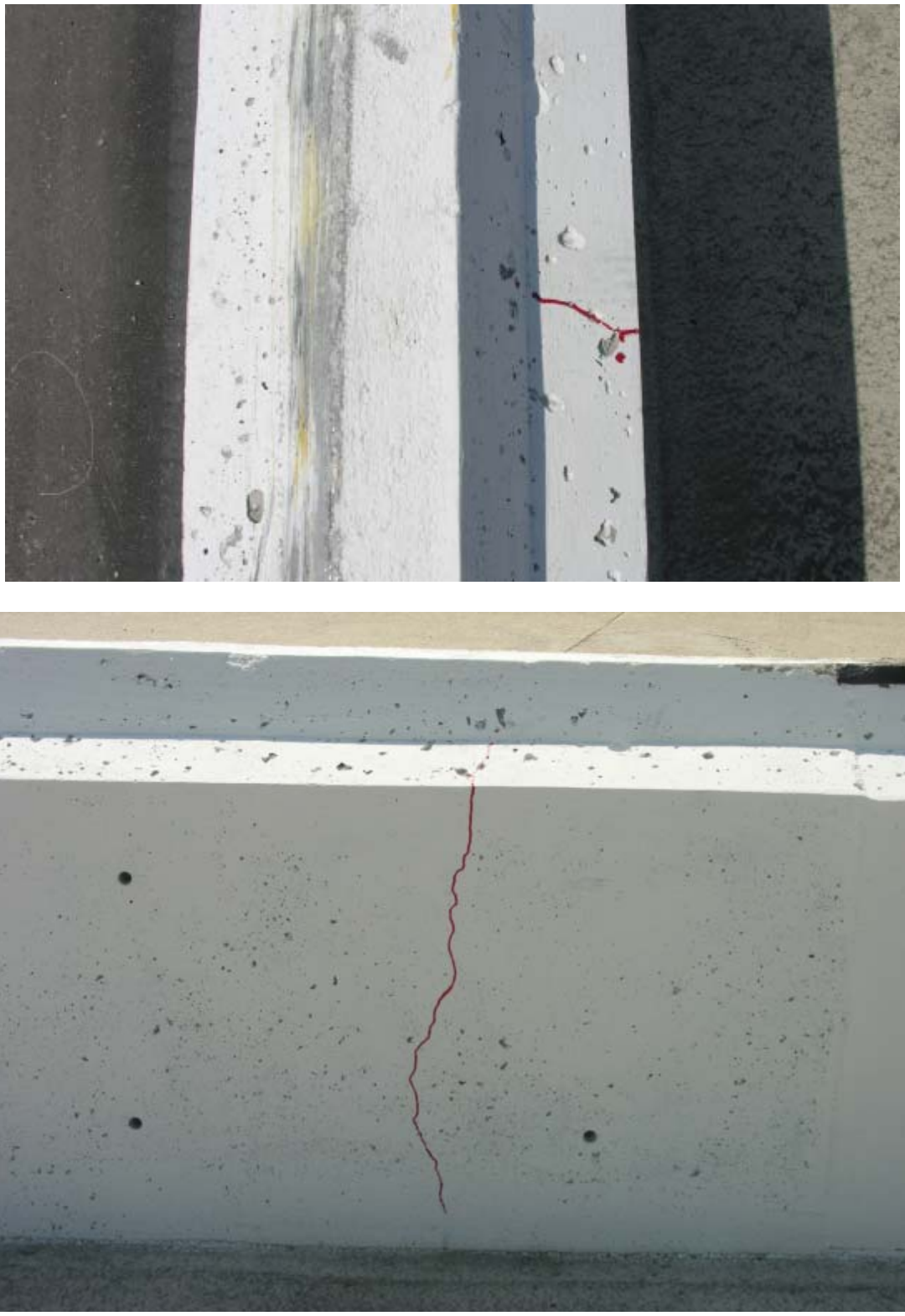

Figure 78. Barrier Cracks 12.2 m (40 ft) from Upstream End, Test TL5CMB-2

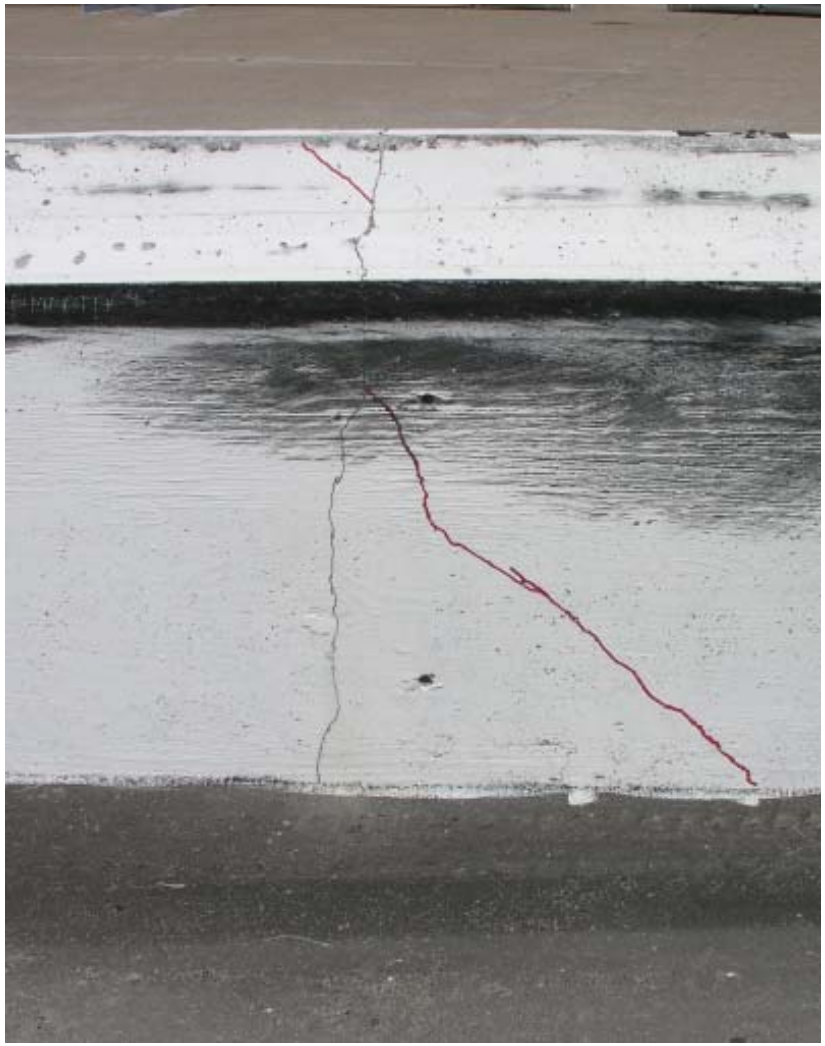

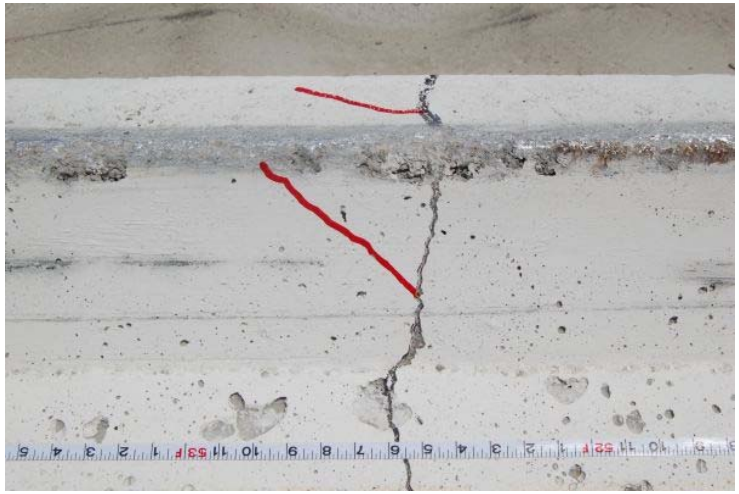

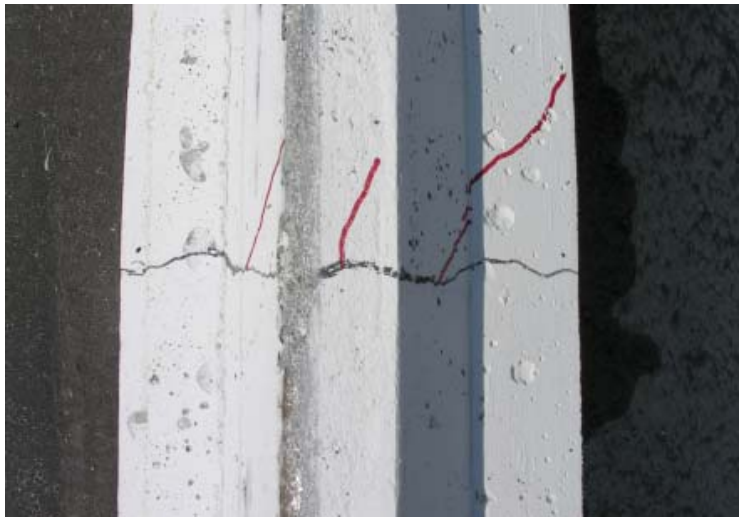

Figure 79. Barrier Cracks 15.8 m (52.5 ft) from Upstream End, Test TL5CMB-2

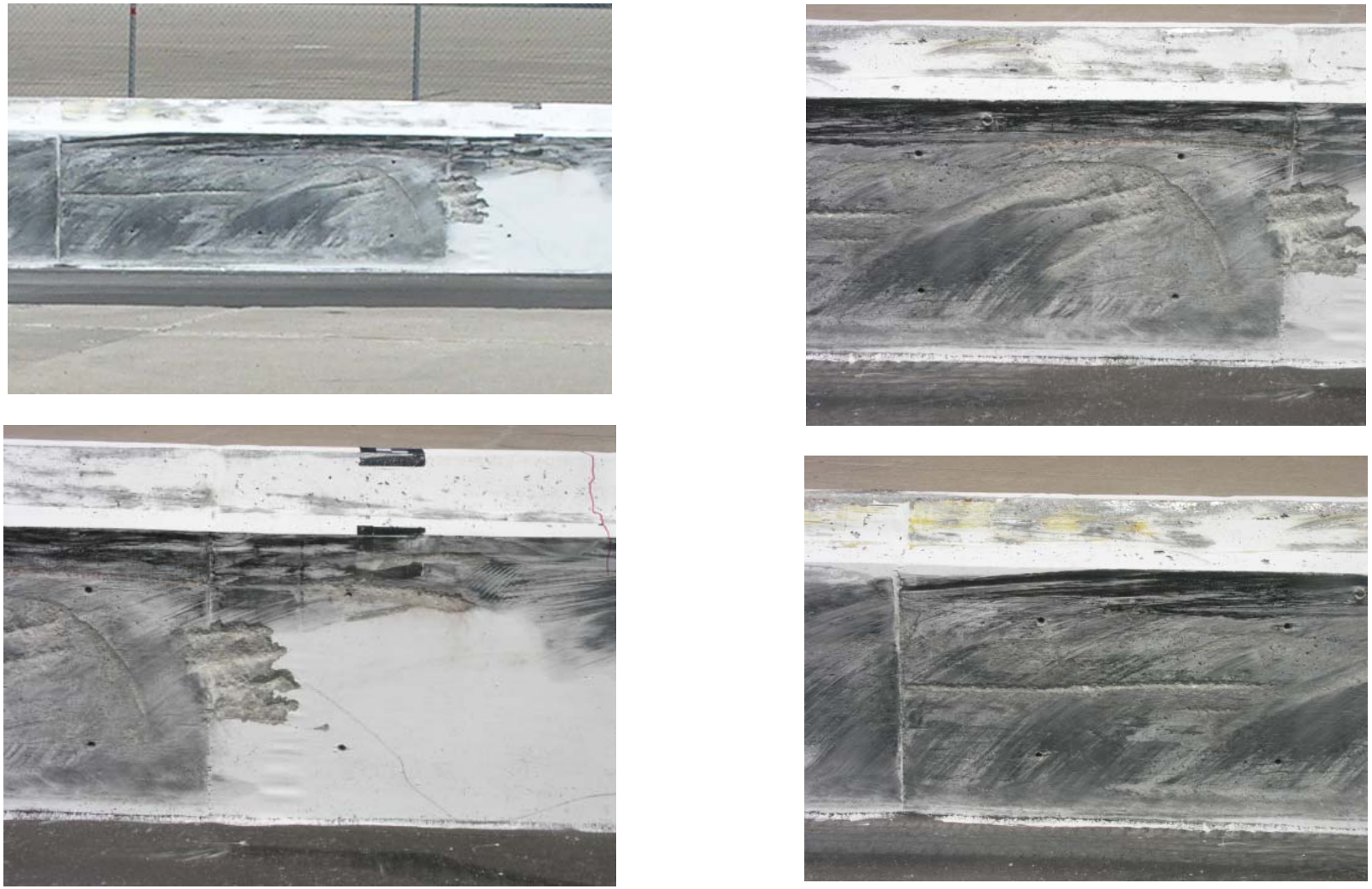

Figure 80. Barrier Damage, Gouges 9.1 - 11.0 m (30 - 36 ft) from Upstream End, Test TL5CMB-2

Figure 81. Barrier Damage to Top Protrusion, Test TL5CMB-2

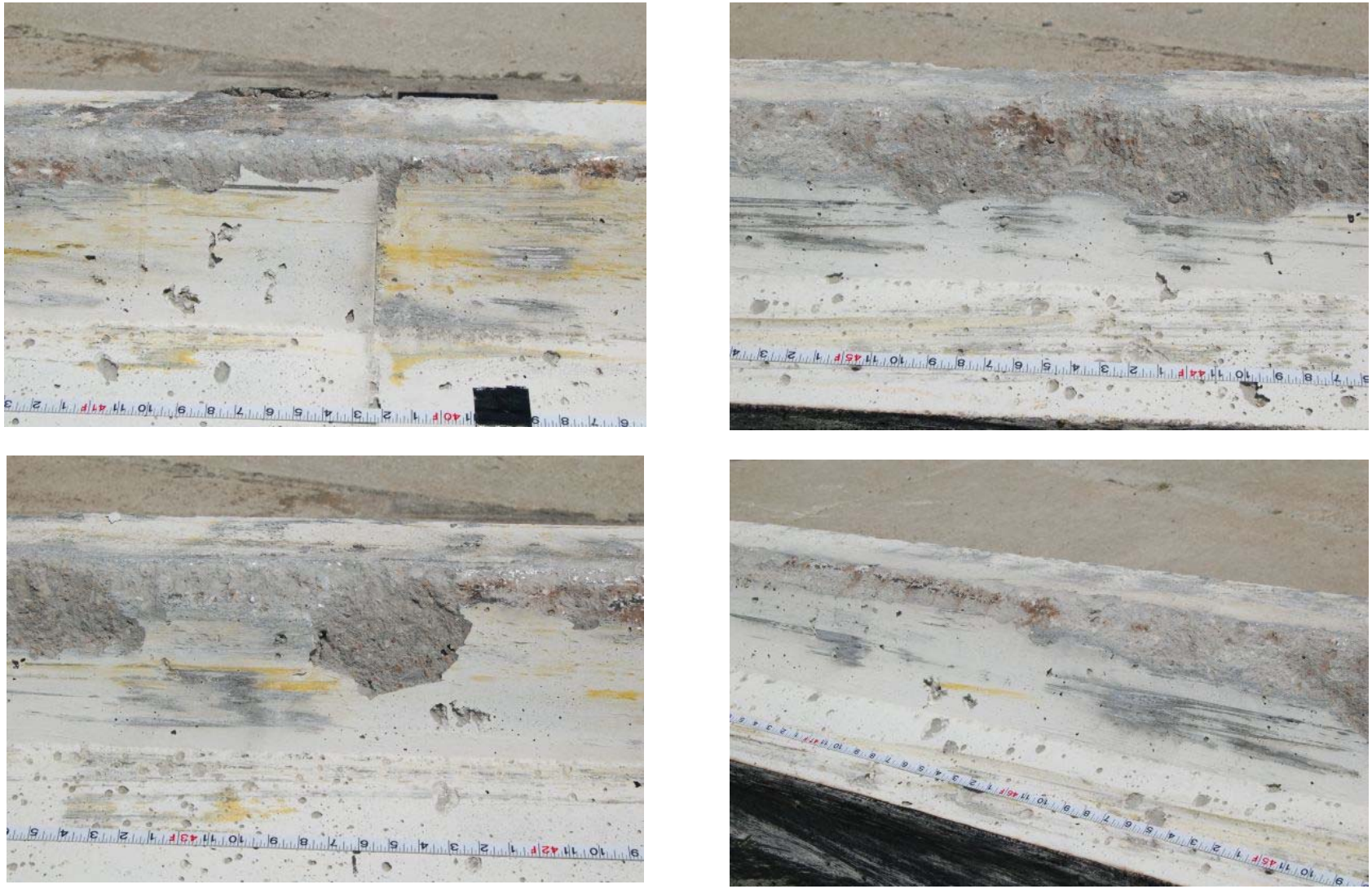

Figure 82. Barrier Damage to Top Protrusion 12.2 – 14.3 m (40 – 47 ft) from Upstream End, Test TL5CMB-2

Figure 83. Tire Marks from Middle to Downstream End, Test TL5CMB-2

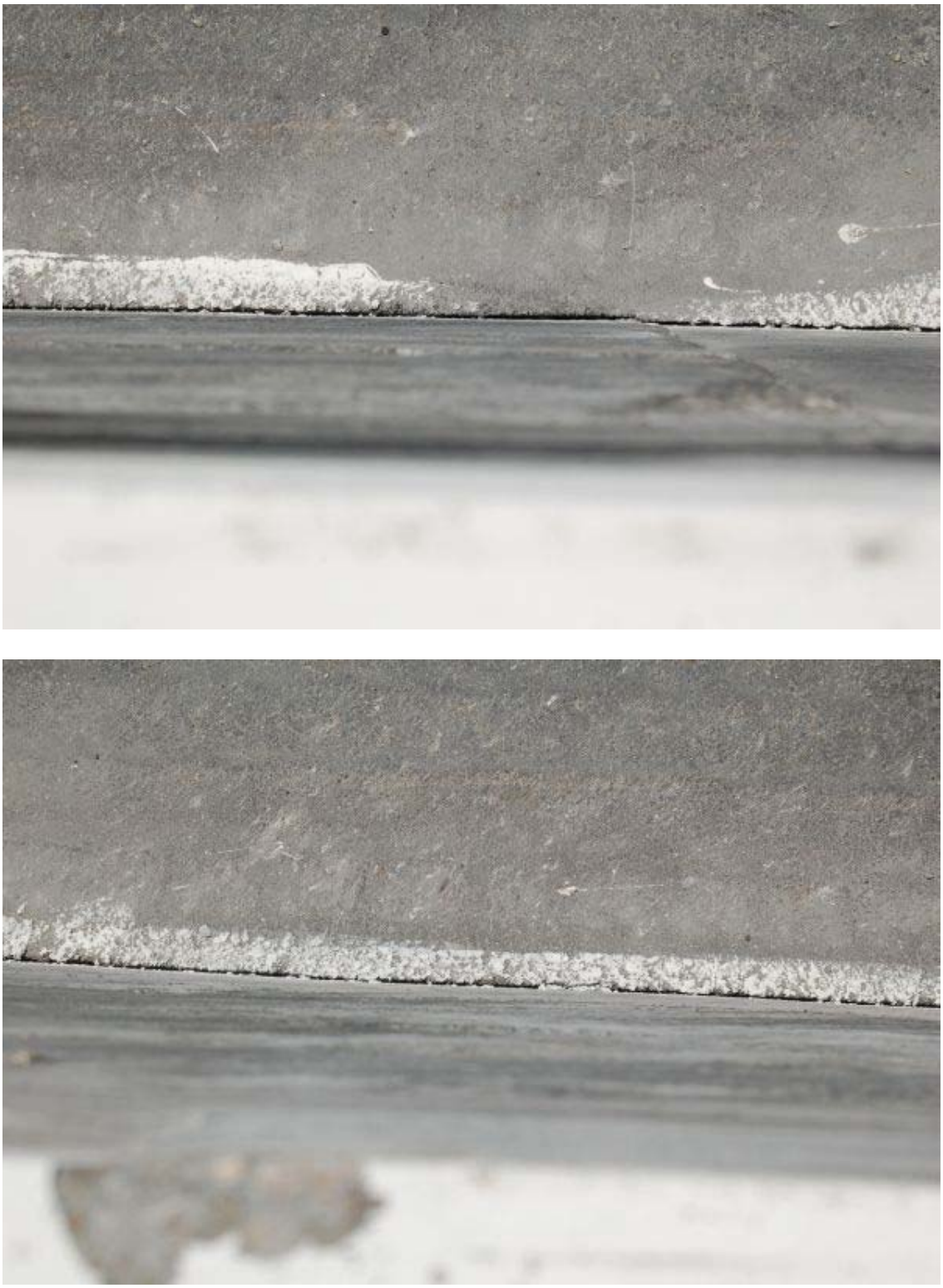

Figure 84. Front-Side Barrier Asphalt Gaps Near Impact, Test TL5CMB-2

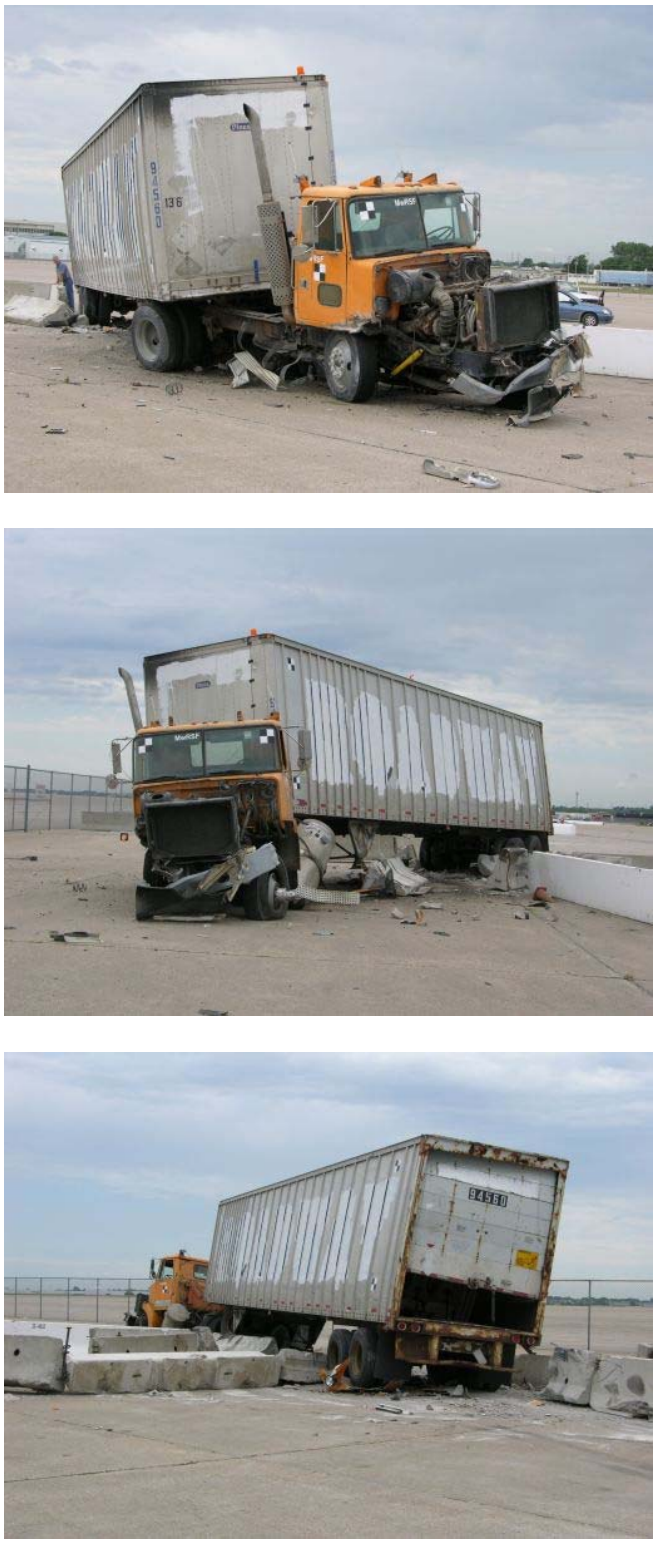

Figure 85. Vehicle Damage, Test, TL5CMB-2

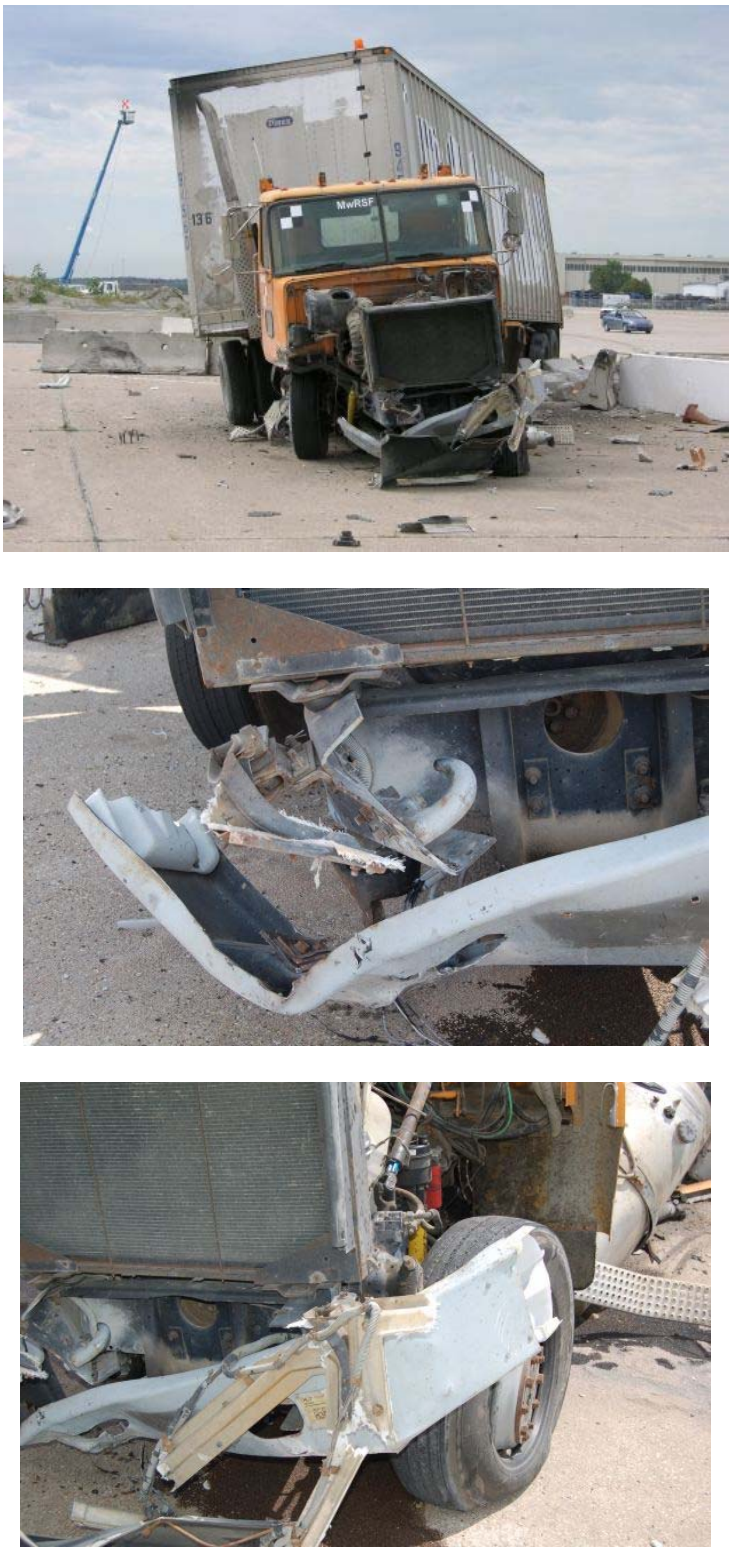

Figure 86. Front Bumper Damage, Test TL5CMB-2

Figure 87. Front Right Tractor Damage, Test TL5CMB-2

Figure 88. Right Side Tractor Damage, Test TL5CMB-2

Figure 89. Left Side Tractor Damage, Test TL5CMB-2

Figure 90. Vehicle Damage to Front Tandems, Test TL5CMB-2

Figure 91. Right Side Trailer Damage, Test TL5CMB-2

Figure 92. Damage to Rear of Vehicle, Test TL5CMB-2

9 ALTERNATIVE ANCHORAGE DESIGNS

As discussed in Section 7.2.3, there are multiple ways to anchor a concrete median barrier. The anchorage system consisting of dowel bars and an asphalt keyway was used for the full-scale crash test, as described in the previous chapter, because it is believed to be the weakest of the common anchorage systems. Since the test was successful, using either this method of anchorage or casting the stirrups directly into a rigid substructure would be acceptable. The rigid substructure can be either a reinforced concrete slab or a longitudinal footing. The following sections provide brief explanations and examples of conservative designs for both the slab and footing anchorage options. The design philosophies for these anchorage options are conservative since these anchorages were not field tested.

9.1 Anchoring with a Reinforced Concrete Footing

Previously, the subsurface footing which anchored the barrier end sections was designed to carry a torsion load equivalent to the calculated overturning moment, M_c, of the barrier (see Section 7.8 and Appendix C for details). The design steps used to configure the end section footings were also used to create a footing for the interior barrier section. However, the only difference was that the torsion observed in the interior footing has two load paths, upstream and downstream. Thus, the interior footing must only carry half of the total torsion load. Appendix G contains calculations demonstrating the necessary design steps using the test barrier configuration, Design A from Chapter 7. If a different barrier configuration is selected for use, the corresponding cantilever moment and critical length, M_c and L_{CR} found in Appendix A, must be use to find the correct torsion load. The result of these design calculations is the footing

shown in Figure 93. Please note that several other footing designs would provide adequate anchorage for the TL-5 median barrier system but have not been included herein.

9.2 Anchoring to a Reinforced Concrete Slab

Similar to the footing design, the reinforced concrete anchor slab should also be designed to carry and transfer the cantilever moment of the barrier, M_c. As long as the anchor slab is tied to the surrounding roadway slabs, it is only required to transfer and disperse the barrier cantilever moment (the shear force in the slab is negligible). Table 44 lists the cantilever moment for the three most efficient designs discussed in Chapter 7. Notice that all three barrier designs have similar overturning capacities. Thus, a single reinforced concrete anchor slab can be designed to accommodate all three of these stirrup configurations.

Table 44. Cantilever Moments of the Three Most Efficient Designs

Design	Base Width		Stirrup Bar Size	Stirrup Spacing		M_c	
	(mm)	(in.)		(mm)	(in.)	(kN-m / m)	(k-ft / ft)
A	613	24.125	#5	457	18	102.84	23.11
B	613	24.125	#6	610	24	109.38	24.58
C	664	26.125	#4	305	12	108.67	24.42

The design of the anchor slab only consists of finding a reinforcement and slab thickness configuration to match the maximum value for the cantilever moment, 109.4 kN-m/m (24.6 k-ft/ft). Calculations were made for a slab thickness of 305 mm (12 in.) and a clear cover of 51 mm (2 in.). The necessary steel reinforcement was found to be two #6 bars spaced every 254 mm (10 in.), as shown in Figure 94. This steel must be positioned transverse to the barrier in

order to resist overturning. Two #3 bars spaced at 305 mm (10 in.) were added to the slab longitudinally to meet shrinkage and temperature steel requirements. Although not shown herein, other reinforced concrete slab designs would also provide adequate anchorage.

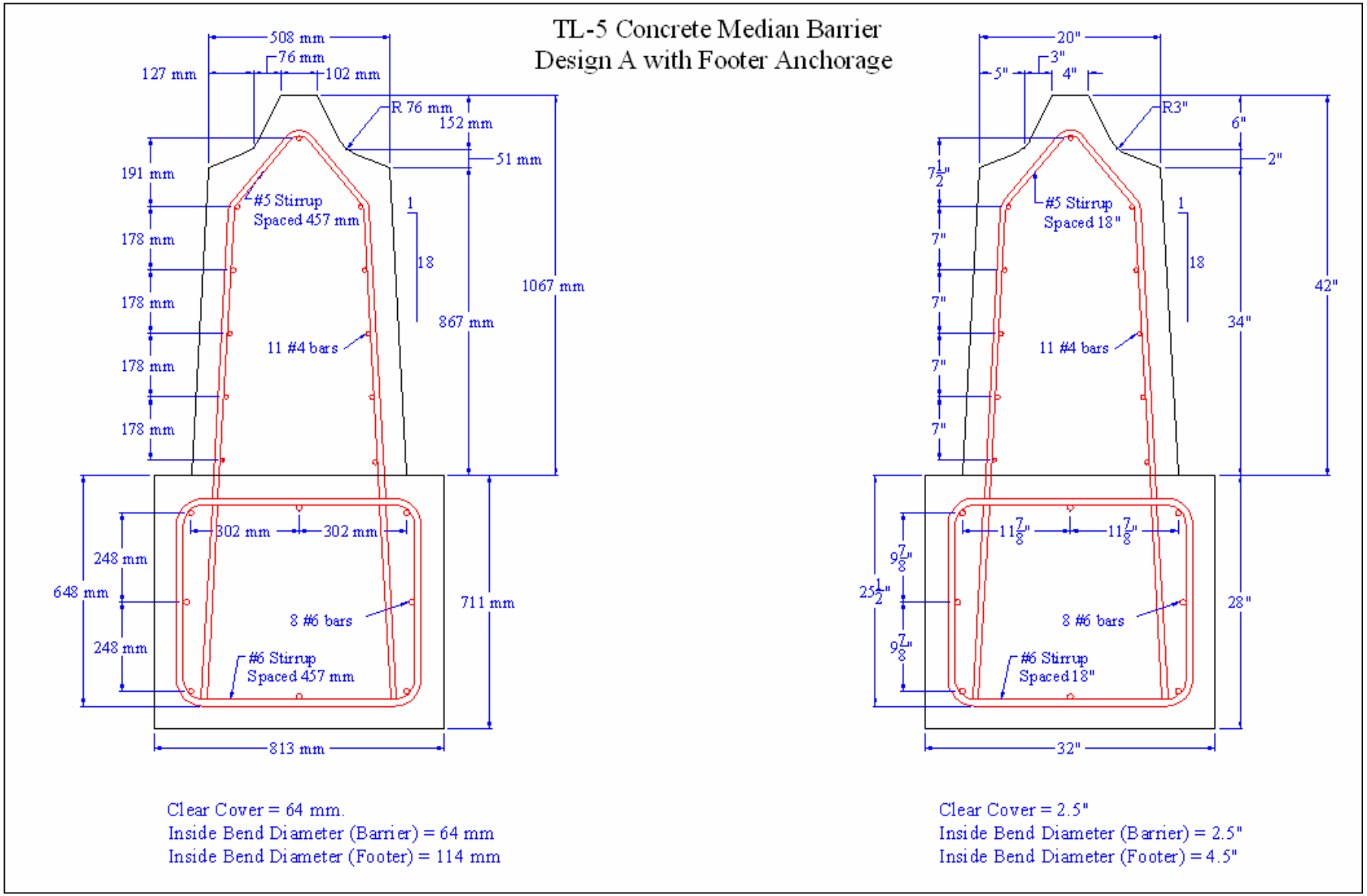

Figure 93. TL-5 Concrete Median Barrier Anchored to a Longitudinal Reinforced Concrete Footer

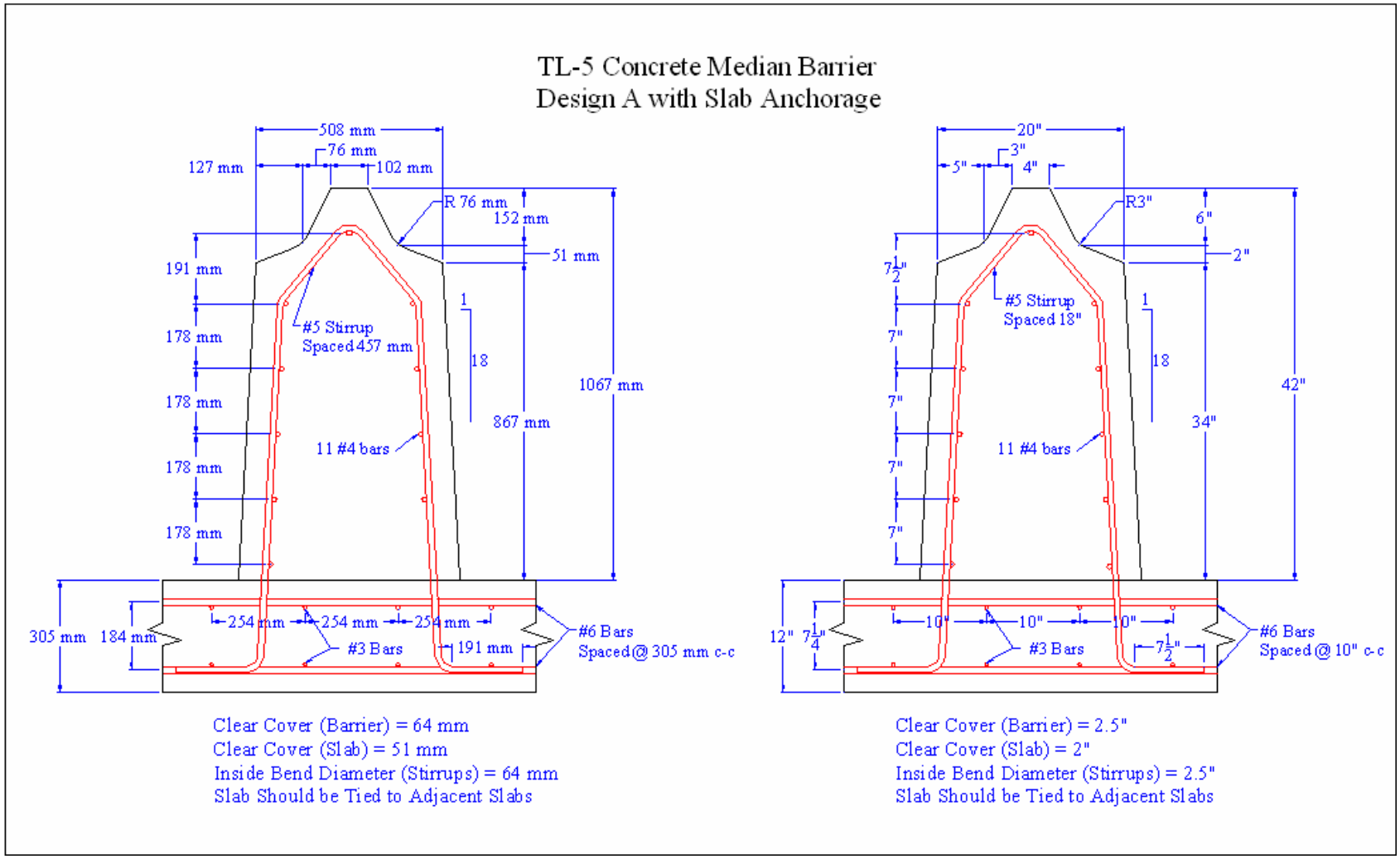

Figure 94. TL-5 Concrete Median Barrier Anchored to Slab

10 COMPARISON OF TL-5 CONCRETE MEDIAN BARRIERS

Following the development and crash testing of the new TL-5 concrete median barrier discussed in the previous chapters, a comparison was made between the new barrier and the three TL-5 barriers recommended for use in the 2006 Edition of the Roadside Design Guide [18]. These barriers include the tall, reinforced concrete safety shape, the tall, non-reinforced concrete safety shape, and the single-slope concrete barrier.

The tall, reinforced concrete safety shape barrier is a New Jersey shaped barrier, as shown in Figure 95. The top of the barrier is 1,070 mm (42 in.) above the roadway surface, while its base is embedded in a 75 mm (3 in.) asphalt keyway on both sides of the barrier. Although the barrier was successfully crash tested in 1983 [19], it has some negative aspects. First, as described Chapter 4, New Jersey shaped barriers can cause increased vehicle climb and roll, which can lead to rollovers, during impacts involving passenger vehicles. Thus, even though the barrier redirects large trucks, the safety of passengers in both small cars and pickup trucks can be compromised. Second, the internal reinforcement is excessive. Using the yield line analysis procedures described in Section 7.4, the barrier capacity was calculated to be 1,913 kN (430 kips). As noted in Section 7.5, a TL-5 barrier has been successfully tested with structural capacities of 943 kN (212 kips). Therefore, this barrier is twice as strong as necessary. The internal steel reinforcement of this barrier is over designed and leads to unnecessary additional cost.

The tall, non-reinforced concrete safety shape barrier has the same dimensions as the previous barrier, although it contains no internal steel. This concrete barrier was successfully tested in 1990 [20] by utilizing only a 75 mm (3 in.) asphalt keyway, as illustrated in Figure 96.

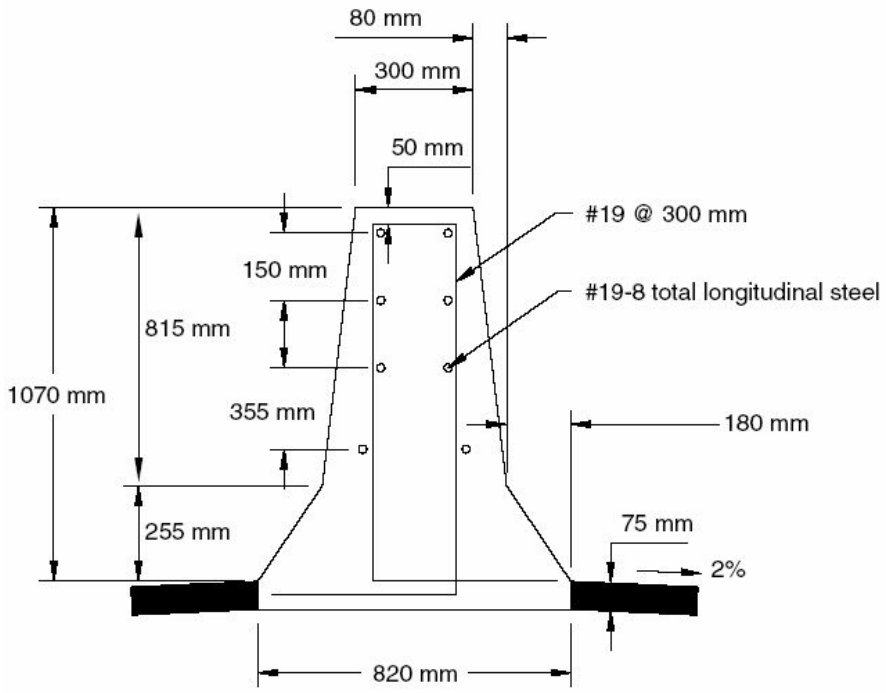

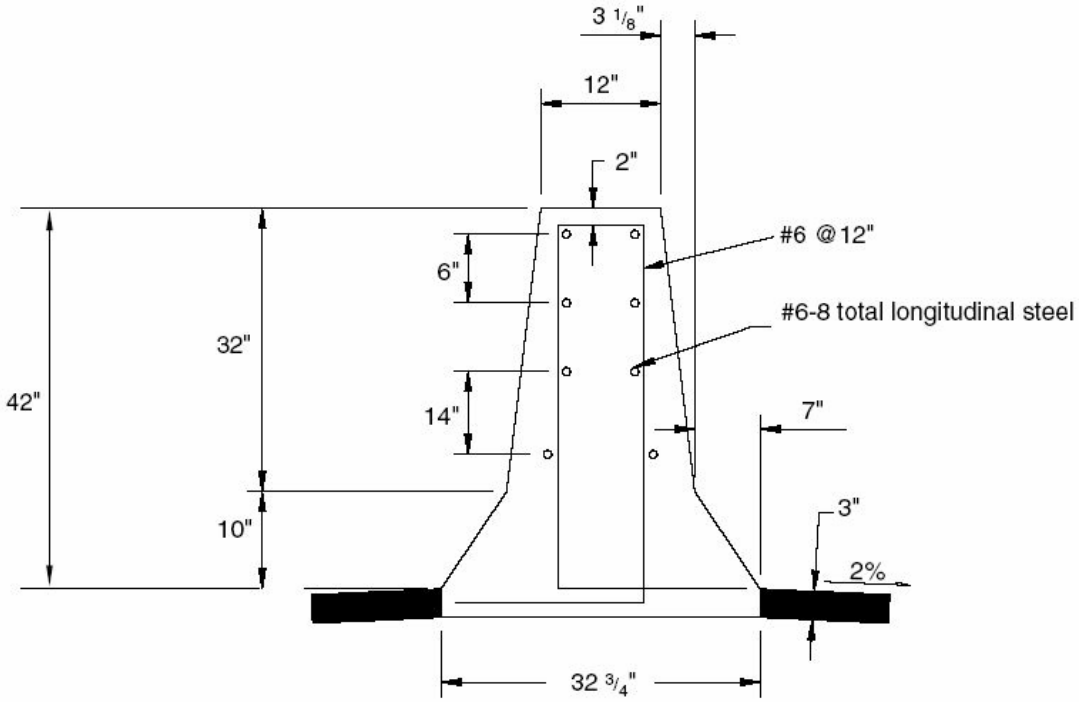

Figure 95. Reinforced Concrete Tall Wall Safety Shaped Barrier [18, 19]

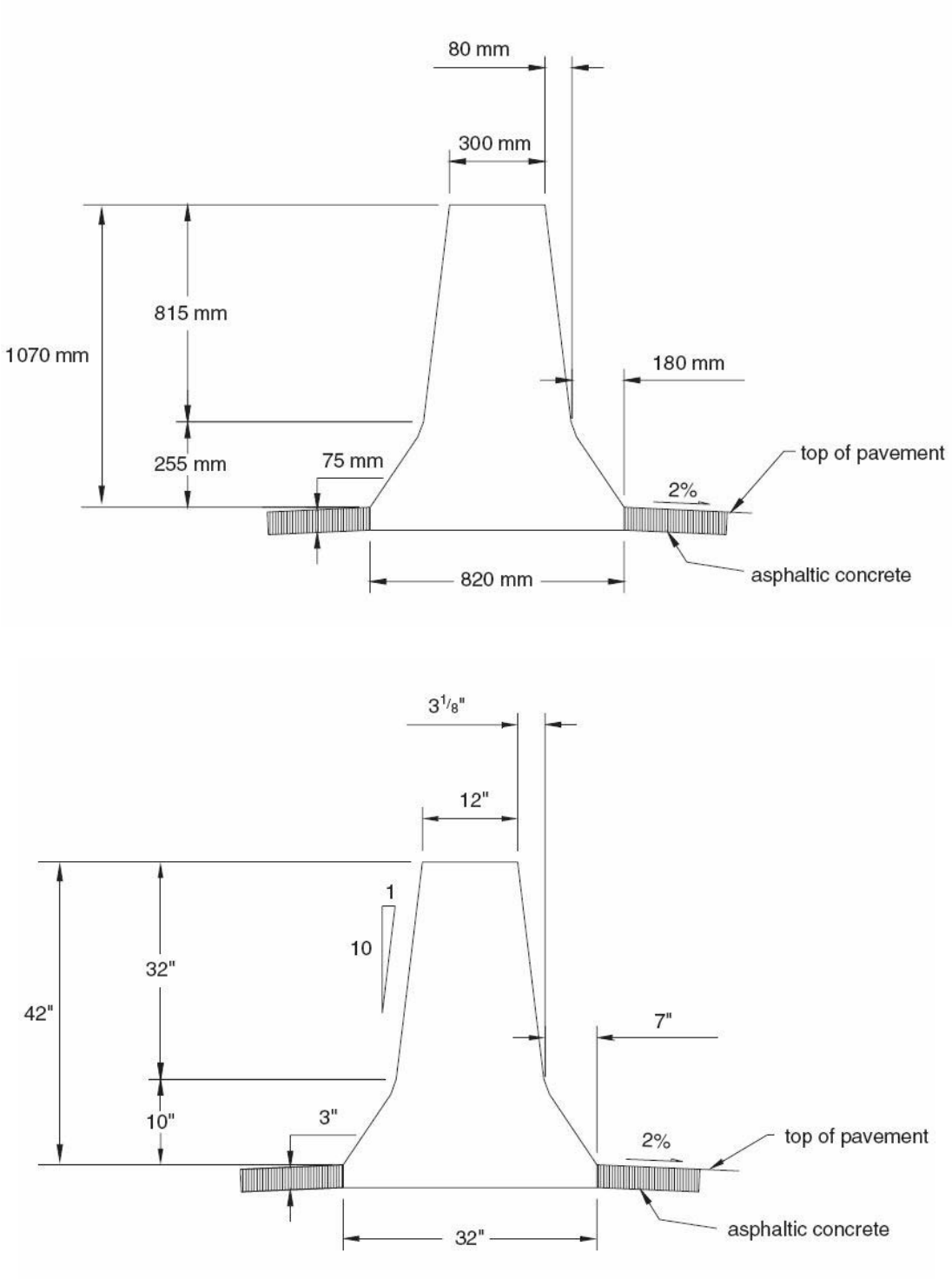

Figure 96. Non-Reinforced Concrete Tall Wall Safety Shaped Barrier [18, 20]

Even with a successful test, the lack of any internal steel is a major concern. Without the minimum temperature and shrinkage steel, cracking and rapid deterioration is expected to occur, especially in geographic regions which experience a regular freeze – thaw climate cycle. Continual cracking not only results in a poor looking barrier, but it could also drastically affect the barrier strength. If the barrier were tested several years after being constructed, the results may be expected to be much different.

The single-slope concrete barrier, shown in Figure 97, contains a more desirable amount of internal reinforcement than the previous two barriers. Minimum temperature and shrinkage steel is provided, and using yield line analysis, the structural capacity of the single-slope barrier is calculated to be 916 kN (206 kips). This is just below the proven adequate strength of 943 kN (212 kips). A TL-5 crash test has not been conducted on the single-slope barrier to verify its design or strength. However, it is believed that this barrier would meet the TL-5 impact criteria found in NCHRP Report 350.

All three of these barriers, as well as the new TL-5 barrier, are able to be constructed using the cost efficient method of slipforming. Also, all of the barriers utilize the same 76 mm (3 in.) asphalt keyway as anchorage (no anchorage is shown in the Roadside Design Guide for the single slope, but it is predicted to have the same anchorage system as the rest). However, the new TL-5 barrier also provides anchorage options for fully embedding the stirrups in either a reinforced concrete slab or footing. The project engineer can select the most desirable anchorage for a specific installation.

The new TL-5 barrier improves from the current barriers for a two additional reasons. First, passenger vehicle safety is optimized by the new barrier geometry. As demonstrated in

Chapter 4, the risk of vehicle rollover is reduced as the barrier face is configured to be closer to vertical. Thus, the new barrier is preferred over the two New Jersey shapes and the single slope barrier. Also, the new barrier is the only barrier designed to prevent head slap. Although head slap is not a problem for the New Jersey shape barriers, it poses to be a potential problem for the tall single slope barrier.

The second main advantage of the new TL-5 barrier is the reduction in construction costs. Compared to the other reinforced barriers, the new barrier is calculated as the least expensive when using the cost and labor estimates found in Chapter 7. The non-reinforced New Jersey barrier was estimated as the cheapest of all the barriers, but the lack of temperature and shrinkage steel may lead to premature deterioration, as discussed previously. Table 45 and Table 46 directly compare the four barriers in SI and English units, respectively.

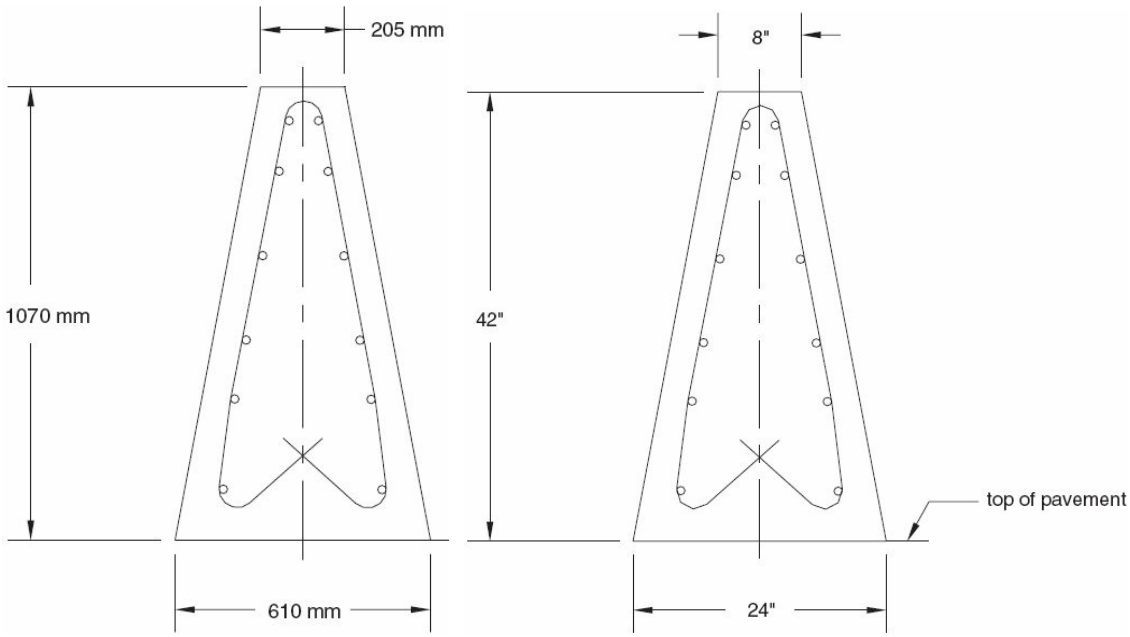

Figure 97. Single Slope Concrete Barrier [18]

Table 45. Comparison of TL-5 Concrete Median Barriers (SI)

Items	Non-Reinforced New Jersey	Reinforced New Jersey	Single Slope	New TL-5 Median Barrier
Ultimate Strength	NA	1910 kN	916 kN	956 kN
Crash Tested	Yes	Yes	No	Yes
Base Attachment	76 mm Asphalt Keyway	76 mm Asphalt Keyway	76 mm Asphalt Keyway	3 Options
Top Width	300 mm	300 mm	205 mm	100 mm
Base Width	820 mm	820 mm	610 mm	615 mm (605 mm)
Cross Section Area	0.540 m^2	0.540 m^2	0.481 m^2	0.573 m^2
Longitudinal Steel	NA	8 #6 bars	12 #5 bars	11 #4 bars
		17.89 kg/m	18.53 kg/m	10.94 kg/m
Transverse Steel	NA	#6 stirrup 12" c-c	#4 stirrup 12" c-c	#5 stirrup 18" c-c
		L = 3048 mm	L = 2184 mm	L = 2832 mm
		22.35 kg/m	7.11 kg/m	9.61 kg/m
Total Steel	NA	40.24 kg/m	25.75 kg/m	20.55 kg/m
Cost Steel	NA	$90.49 /m	$57.91 /m	$46.23 /m
Total Concrete per Foot	0.540 m^3/m	0.540 m^3/m	0.481 m^3/m	0.573 m^3/m
Cost Concrete	$58.10 / m	$58.10 / m	$51.18 / m	$60.89 / m
Total Cost	$58.10 / m	$148.59 / m	$109.09 / m	$107.12 / m

Table 46. Comparison of TL-5 Concrete Median Barriers (English – Units)

Items	Non-Reinforced New Jersey	Reinforced New Jersey	Single Slope	New TL-5 Median Barrier
Ultimate Strength	NA	430 (kips)	206 (kips)	215 (kips)
Crash Tested	Yes	Yes	No	Yes
Base Attachment	3" Asphalt Keyway	3" Asphalt Keyway	3" Asphalt Keyway	3 Options
Top Width	12 in.	12 in.	8 in.	4 in.
Base Width	32 in.	32 in.	24 in.	24.125 in. (32.75 in.)
Cross Section Area	837 in^3	837 in^3	746 in^3	888 in^3
Longitudinal Steel	NA	8 #6 bars	12 #5 bars	11 #4 bars
		12.02 lb/ft	12.52 lb/ft	7.35 lb/ft
Transverse Steel	NA	#6 stirrup 12" c-c	#4 stirrup 12" c-c	#5 stirrup 18" c-c
		L = 120 in.	L = 86 in.	L =112 in.
		15.02 lb/ft	4.78 lb/ft	6.46 lb/ft
Total Steel	NA	27.04 lb/ft	17.30 lb/ft	13.81 lb/ft
Cost Steel	NA	$27.58 /ft	$17.65 /ft	$14.09 /ft
Total Concrete per Foot	0.215 yd^3/ft	0.215 yd^3/ft	0.192 yd^3/ft	0.228 yd^3/ft
Cost Concrete	$17.71 / ft	$17.71 / ft	$15.60 / ft	$18.56 / ft
Total Cost	$17.71 / ft	$45.29 / ft	$33.25 / ft	$32.65 / ft

11 SUMMARY, CONCLUSIONS, AND RECCOMENDATIONS

A new concrete median barrier has been designed to optimize stability and safety for passenger vehicle impacts and to contain and redirect fully-loaded tractor trailers. Implementation of this barrier should improve safety for all vehicles on heavily traveled highways.

The study began with an investigation of the optimum barrier shape for passenger vehicles. Previously conducted full-scale crash tests were used to analyze vehicle responses to the most common concrete barrier shapes used on today's roadways including New Jersey shape, F-Shape, single slope, vertical, and open concrete rail. It was concluded that vertical faced barriers produced the lowest amount of vehicle climb and roll for small cars, sedans, and pickup trucks, while impact forces and deceleration rates remained within the safety limits of NCHRP Report 350. Therefore, vertical faced barriers were identified as the optimum barrier shape, and a vertical barrier was selected as the base shape for the new barrier.

The propensity for head slap during impacts with tall vertical barriers was identified by analyzing results from full-scale crash testing. An envelope was created to encompass the extent of the head ejection data from available historical crash test videos. This head ejection envelope was created to be a shape template for rigid barriers in order to eliminate the risk of head slap. The new barrier design incorporates a setback on the top to keep the barrier out of the head ejection envelope.

The barrier incorporates a height of 1,067 mm (42 in.). This height has been previously tested and proven effective in redirecting tractor trailers under TL-5 impact conditions from NCHRP Report 350. Through discussions with contractors in the roadway industry, adjustments

were made to this shape in order to make slipforming the barrier possible. These changes included giving the barrier face a slight slope, or batter, of 1/18 and rounding the interior angle near the top of the barrier to a 76 mm (3 in.) radius.

Both transverse and longitudinal steel were deemed necessary to hold the barrier shape during curing and to provide enough strength to redirect a tractor trailer. The internal steel was optimized by identifying the configurations which met shrinkage and temperature steel requirements, minimum structural capacity, and exhibited the lowest construction cost. The structural capacity of each configuration was calculated using yield line theory, and the strength requirement was taken as the minimum calculated strength from previous successful TL-5 crash tests. The construction cost of each barrier configuration was calculated from material and installation estimates for concrete and steel provided by roadway barrier contractors. In all, 2,000 different barrier configurations were evaluated, and the top design configurations were identified.

Barrier end sections were also designed for the barrier using similar methods to the interior section design. The only difference was the assumed failure shape of the end section had one yield surface instead of two, so the corresponding yield line analysis equations were updated. All 2,000 barrier reinforcement configurations were evaluated for the end section requirements, and the acceptable designs were identified.

A full-scale crash test was conducted on the top interior barrier configuration with the lowest estimated strength. The barrier was anchored using an asphalt keyway and dowel bars because this anchorage system was identified as having a lower strength than fully anchoring the stirrups in a reinforced slab or footer. A barrier end section design was selected to match the

interior reinforcement, thus providing some continuity between the sections. The concrete median barrier successfully redirected a tractor trailer with minimal barrier damage. Previous crash tests have shown that both full size pickups and small cars can be safely redirected by vertical and single-slope concrete barriers, so the new barrier was deemed acceptable for these passenger vehicles without full-scale crash testing. Thus, the barrier was determined to be acceptable according to the TL-5 safety performance criteria presented in NHCRP Report 350 (the test would also have been deemed a success under the performance criteria found in the Update to NCHRP Report 350). All barrier configurations with equal or greater structural capacity were thereby deemed as appropriate for use as well. Thus, designers can select the most desirable barrier design from those configurations which met all structural requirements, as shown in Appendices A and B.

12 REFERENCES

1. *Toolbox of Highway Safety Strategies*, Iowa Safety Management System, Prepared by the Center for Transportation Research and Education – Iowa State University, August, 2004.

2. Buth, C.E., Campise, W.L., and Marquis, E.L, *Development of a High Performance Median Barrier*, Texas Transportation Institute, April 1983.

3. Lundstrom, L.C., Skeels, P.C., Englund, B.R., and Rogers, R.A., *A Bridge Pararpet Designed For Safety*, General Motors Proving Ground, presented at 44th Annual Highway Research Board Meeting, January 1965.

4. Hellriegel, E.J., *Development of the Narrow Median Concrete Barrier in New Jersey*, Presented at the 38th Annual Meeting of Institute of Traffic Engineers, August, 1968

5. Nordlin, E.F., Field, R.N., Stoker, J.R., Pelkey, R.A., and Halterman, J.A., *Dynamic Tests of Concrete Median Barrier Series XVI*, State of California Transportation Agency, Division of Highways, August 1967.

6. Strashny, A., *An analysis of Motor Vehicle Rollover Crashes and Injury Outcomes*, National Center For Statistics and Analysis (NCSA), National Highway Traffic Safety Administration (NHTSA), March 2007.

7. Bronstad, M.E., Calcote L.R., and Kimbar, Jr, C.E., *Concrete Median Barrier Research*, Final Report to Federal Highway Administration, Southwest Research Institute, June 1976.

8. Mak, K.K., Sicking, D.L., *Rollover Caused by Concrete Safety Shaped Barier*, Transportation Research Record, No. 1258, Transportation Research Board, National Research Council, Washington, D.C., 1990.

9. Jewell, J.R.., *Vehicle crash tests of a slip-formed, single slope, concrete median barrier with integral concrete glare screen*, [Sacramento]: California Dept. of Transportation, Division of New Technology, Materials and Research, 1997.

10. Beason, W.L., Ross, H.E., Perera, H.S., and Marek, M., *Single-Slope Concrete Median Barrier*, Transportation Research Record No. 1302, Transportation Research Board, National Research Council, Washington, D.C., 1991.

11. Viner, J.G, *Risk of Rollover in Ran-Off-Road Crashes*, Transportation Research Record No. 1500, Transportation Research Board, National Research Council, Washington, D.C., 1995.

12. Giavotto, V., *Compatibility of Vehicles with Safety Barriers: Head Ejection Through Side Windows*, Transportation Research Record No. 1890, Transportation Research Board, National Research Council, Washington, D.C., 2004.

13. Polivka, K.A., Faller, R.K., Holloway, J.C., Rohde, J.R., and Sicking, D.L., *Development, Testing, and Evaluation of NDOR's TL-5 Aesthetic Open Concrete Bridge Rail*, Final Report to the Nebraska Department of Roads, Transportation Research Report No. TRP-03-148-05, Midwest Roadside Safety Facility, University of Nebraska-Lincoln, December 1, 2005.

14. "Tentative Service Requirements for Bridge Rail Systems," National Cooperative Highway Research Program (NCHRP) Report 86, Washington, D.C., 1970

15. Beason, W.L., Hirsch, T.J., and Campise, W.L., *Measurement of Heavy Vehicle Impact Forces and Inertia Properties,* Final Report to Federal Highway Administration, Texas Transportation Institute, May 1989.

16. Hirsch, T.J., *Analytical Evaluation of Texas Bridge Rails to Contain Buses and Trucks*, Report No. FHWA TX 78-230-2, Performed for the Texas State Department of Highways and Public Transportation, Performed by Texas Transportation Institute, Texas A&M University, College Station, Texas, August 1978.

17. Ross, H.E., Sicking, D.L., Zimmer, R.A., and Michie, J.D., *Recommended Procedures for the Safety Performance Evaluation of Highway Features*, National Cooperative Research Program (NCHRP) Report 350, Transportation Research Board, Washington, D.C., 1993.

18. *Roadside Design Guide*, 3rd Edition 2006, American Association of State Highway and Transportation Officials (AASHTO), Washington, D.C., 2006.

19. Buth, C.E., Campise, W.L., Griffin III, L.I., Love, M.L., and Sicking, D.L., *Performance Limits of Longitudinal Barrier Systems*, Report to Federal Highway Administration, Report No. FHWA-RD-86/153, Texas Transportation Institute, May 1986.

20. Mak, K.K., Campise, W.L., *Test and Evaluation of Ontario "Tall Wall" Barrier with an 80,000–pound Tractor-Trailer*, Report to Ontario Ministry of Transportation, Texas Transportation Institute, September 1990.

21. Alberson, D.C., Zimmer, R.A., Menges, W.L., *NCHRP Report 350 Compliance Test 5-12 of the 1.07 m Vertical Wall Bridge Railing,* Report to Federal Highway Administration, Texas Transportation Institute, February 1996.

22. Hirsch, T.J., Fairbanks, W.L., and Buth, C.E., *Concrete Safety Shape with Metal Rail on Top to Redirect 80,000-lb Trucks*, Texas Transportation Institute, Transportation Research Record No. 1065, pp. 79-87, 1986.

23. Hirsch, T.J., and Arnold, A., *Bridge Rail to Restrain and Redirect 80,000-lb Trucks*, Texas Transportation Institute and Texas Department of Highways and Public Transportation, Transportation Research Record No. 942, pp. 10-16, 1983.

24. Laker, I.B., *High Containment Safety Barriers: Steel and Concrete,* Presented at the 65th Annual Meeting of the Transportation Research Board, Transport and Road Research Laboratory, Research Report 75, January 1986.

25. Hirsch, T.J., and Bullard, L., *Testing and Evaluation of IBC MK-7 Barrier (with Stabilized Fill) with an 80,000-Pound Tractor Van-Trailer*, Final Report, prepared for ATA foundation, Alexandria Virginia, July 1989.

26. Snyder, R.R., *International Barrier Corporation's IBC Mark-7 Highway Barrier System*, Final Report, Pennsylvania Department of Transportation, October 1992.

27. Roadway CAD Standards, *Single Slope Concrete Barrier, Type 1*, Texas Department of Transportation (TxDOT), http://www.dot.state.tx.us/insdtdot/orgchart/cmd/cserve/standard/rdwylse.htm, accessed July, 2007.

28. 2006 Standard Plans Book, Concrete Barrier Type 60, California Department of Transportation (Caltrans), http://www.dot.ca.gov/hq/esc/oe/project_plans/HTM/06_plans_disclaim_US.htm, accessed July, 2007.

29. Michie, J.D., *Recommended Procedures for the Safety Performance Evaluation of Highway Appurtenances*, National Cooperative Highway Research Program (NCHRP) Report 230, Transportation Research Board, Washington, D.C., March 1981.

30. *Guide Specifications for Bridge Railings*, American Association of State Highway and Transportation Officials (AASHTO), Washington, D.C., 1989.

31. Jehu, V.J. and L.C. Pearson. "Impacts of European cars and a passenger coach against shaped concrete barriers." Transport and Road Research Laboratory Report 801 (1977).

32. Ross, Jr., H.E., Perera, H.S., Sicking, D.L., and Bligh, R.P., *Roadside Safety Design for Small Vehicles,* Final Report to National Cooperative Highway Research Program, Transportation Research Board, National Research Council, RF Project 7043, Texas Transportation Institute, November 1988.

33. Magdaleno, J.A., Faller, R.K., and Post, E.R., *Full-Scale Vehicle Crash Test on Nebraska Bridge Rail Barrier with a Modified New Jersey Shape*, Final Report to Nebraska Department of Roads, Transportation Research Report No. TRP-03-16-89, Project RES1 (0099) P426, Civil Engineering Department, University of Nebraska-Lincoln, March 1989.

34. Bronstad, M.E., Michie, J.D., Calcote, L.R., Hancock, K.L., and Mayer, Jr., J.B., *Bridge Rail Designs and Performance Standards, Volume I: Research Report*, Final Report to Federal Highway Administration, Report No. FHWA/RD-87/049, Southwest Research Institute, February 1987.

35. Davis, S., Baczynski, R., and Garn, R., *Test and Evaluation of Concrete Median Barriers with Light and Heavy Vehicles, Volume I - Technical Report*, Final Report to Federal Highway Administration, Report No. FHWA/RD-81/134, Dynamic Science, Inc., July 1981.

36. Holloway, J.C., Faller, R.K., Pfeifer, B.G., and Post, E.R., *Performance Level 2 Tests on the Missouri 30-in. New Jersey Safety Shape Bridge Rail*, Final Report to the Missouri Highway and Transportation Department, Transportation Research Report No. TRP-03-27-91, Civil Engineering Department, University of Nebraska-Lincoln, November 1991.

37. Buth, C.E., Hirsch, T.J., and Menges, W.L., *Testing of the New Bridge Rail and Transition Designs,* Technical Report, FHWA Contract No. DTFH61-86-C-00071, Report No. FHWA-RD-93-058, Federal Highway Administration, Washington D.C., September 1993.

38. White, M., Jewell, J., and Peter, R., *Crash Testing of Various Textured Barriers,* Final Report to Federal Highway Administration, Report No. FHWA/CA/TL-2002/03, Materials Engineering and Testing Services, California Department of Transportation, September 2002.

39. Beason, W.L., Ross, Jr., H.E., Perera, H.S., and Marek, M., *A Single-Slope Concrete Median Barrier*, Paper submitted to Transportation Research Board, Texas Transportation Institute, Texas Department of Transportation, December, 1990.

40. Jewell, J., Payam, R., Meline, R., and Peter, R., *Vehicle Crash Tests of the Type 70 Bridge Rail,* Final Report to Federal Highway Administration, Report No. FHWA/CA/ESC-98/06, Material Engineering and Testing Services, California Department of Transportation, January 1998.

41. Pfeifer, B.G., Holloway J.C., Faller, R.K., and Rosson, B.T., *Test Level 4 Evaluation of the Minnesota Combination Bridge Rail*, Report No. MN/RC - 96/08, Final Report to the Minnesota Department of Transportation, Project SPR-3(017), Transportation Report No. TRP-03-53-96, Midwest Roadside Safety Facility, University of Nebraska-Lincoln, March 1996.

42. Faller, R.K., Magdaleno, J.A., and Post, E.R., *Full-Scale Vehicle Crash Tests on the Iowa Retrofit Concrete Barrier Rail*, Final Report to Iowa Department of Transportation, Transportation Research Report No. TRP-03-15-88, Civil Engineering Department, University of Nebraska-Lincoln, January 1989.

43. Stout, D., Hinch, J., *Test and Evaluation of Traffic Barriers,* Final Report to Federal Highway Administration, Report No. FHWA-RD-89-119, ENSCO INC., April 1989.

44. Buth, C.E., Williams, W.F., Bligh, R.P., Menges, W.L., and Butler, B.G., *Tests 4,5, & 6: NCHRP Report 350 Testing of the Texas Type T202 Bridge Rail,* Report to Federal Highway Administration, Report No. FHWA/TX-99/1804-3, Texas Transportation Institute, Texas Department of Transportation, December 1998.

45. ENSCO, Inc., *Crash Tests of R4 Retrofit and Open Parapet Bridge Rails – Final Report,* Final Report to Federal Highway Administration, Report No. FHWA-MI-RD-92-01, ENSCO, Inc. and Michigan Department of Transportation, February 1992.

46. Hirsch, T.J. and Romere, P., *Crash Tests of Modified Texas C202 Bridge Rail,* Paper submitted to Transportation Research Board, Texas Transportation Institute, Texas Department of Transportation, July 1989.

47. Bligh, R.P., Mak, K.K., and Hirsch, T.J., *Evaluation of Tennessee Bridge Rail Designs*, Research Report No. RF 7199-1, Texas Transportation Institute, Texas Department of Transportation, May 1994.

48. Alberson, D.C., Williams, W.F., Menges, W.L., and Haug, R.R., *Testing and Evaluation of the Florida Jersey Safety Shaped Bridge Rail,* Research Report No. 9-8132-1, Report to Federal Highway Administration, Report No. FHWA/TX-04/9-8132-1, Texas Transportation Institute, Texas Department of Transportation, February, 2004.

49. Mak, K.K., Menges, W.L., NCHRP Report 350 Compliance Test of the New Jersey Safety Shaped Barrier, Report to Federal Highway Administration, Report No. FHWA-RD-96-201, Texas Transportation Institute, Texas Department of Transportation, March 1997.

50. Bullard, Jr., D.L., Buth, C.E., William, W.F., Menges, W.L., and Schoeneman, S.K., *NCHRP Report 350 Evaluation of the T501 Bridge Rail with Soundwall,* Research Report to Texas Department of Transportation, Report No. FHWA/TX-01/408460-F, Texas Transportation Institute, January 2001.

51. Polivka, K.A., Faller, R.K., Keller, E.A., Sicking, D.L., Rohde, J.R., and Holloway, J.C., *Design and Evaluation of the TL-4 Minnesota Combination Traffic/Bicycle Bridge Rail*, Final Report to the Midwest State's Regional Pooled Fund Program, Transportation Research Report No. TRP-03-74-98, Project No. SPR-3(017)-Year 6, Midwest Roadside Safety Facility, University of Nebraska-Lincoln, November 30, 1998.

52. Polivka, K.A., Hascall, J.A., Faller, R.K., Rohde, J.R., Holloway, J.C., Sicking, D.L., and Kurz, K., *Design and Evaluation of CYRO's Paraglas Soundstop TL-4 Noise Barrier System*, Final Report to CYRO Industries, Inc., Transportation Research Report No. TRP-03-160-05, Midwest Roadside Safety Facility, University of Nebraska-Lincoln, April 22, 2005.

53. White, M., Jewell, J., and Peter, R., *Compliance Crash Testing of a Steel Version of the Type 732 Bridge Rail*, Research Report to California Department of Transportation, Report No. FHWA/CA/TL-2001/41, California Department of Transportation, January 2002.

54. Mak, K.K., Bligh, R.P., Menges, W.L., *Volume I: Technical Report Testing of State Roadside Safety Systems*, Report to Federal Highway Administration, Research Study No. RF 471470, Texas Transportation Institute, September 1996.

55. Jewell, J. and Peter, R., *Compliance Crash Testing of the Type 60K Concrete Barrier Used in Semi-Permanent Installations,* Final Report to Federal Highway Administration, Report No. FHWA/CA/TL-2001/08, Office of Materials Engineering and Testing Services, California Department of Transportation, August 9, 2001.

56. Bullard, Jr., D.L., Williams, W.F., Menges, W.L., and Haug, R.R., *Design and Evaluation of the TXDOT F411 and T77 Aesthetic Bridge Rails,* Research Report No. 4288-1, to Federal Highway Administration, Report No. FHWA/TX-03/4288-1, Texas Transportation Institute, Texas Department of Transportation, October 2002.

57. Buth, C.E., Williams, W.F., Bligh, R.P., and Menges, W.L., *NCHRP Report 350 Test of the Texas Type T411 Bridge Rail,* Report to Federal Highway Administration, Report No. FHWA/TX-98/1804-3, Texas Transportation Institute, Texas Department of Transportation, May 1998.

58. Alberson, D.C., Zimmer, R.A., and Menges, W.L., *NCHRP Report 350 Compliance Test 3-11 of the 1.07-Meter Vertical Wall Bridge Railing,* Final Report to Federal Highway Administration, Report No. FHWA-RD-96-174, Project 405511-1, Texas Transportation Institute, September 1996.

59. Meline, R., Jewell, J., and Peter, R., *Vehicle Crash Tests of the Type 80 Bridge Rail,* Final Report to Federal Highway Administration, Report No. FHWA/CA/ESC-98/06 Part 3, Office of Materials and Foundations, California Department of Transportation, March 1999.

60. Buth, C.E., Williams, W.F., Bligh, R.P., Menges, W.L., and Haug, R.R., *Performance of the TXDOT T202 (MOD) Bridge Rail Reinforced with Fiber Reinforced Polymer Bars,* Research Report No. 0-4138-3, to Federal Highway Administration, Report No. FHWA/TX-03/0-4138-3, Texas Transportation Institute, Texas Department of Transportation, October 2002.

61. Polivka, K.A., Faller, R.K., Rohde, J.R., Reid, J.D., Sicking, D.L., and Holloway, J.C., *Safety Performance Evaluation of the Nebraska Open Concrete Bridge Rail on an Inverted Tee Bridge Deck*, Final Report to the Nebraska Department of Roads, Transportation Research Report No. TRP-03-133-04, Midwest Roadside Safety Facility, University of Nebraska-Lincoln, January 21, 2004.

62. Holloway, J.C., Faller, R.K., Wolford, D.L., and Sicking, D.L., *Performance Level 2 Tests on a 29-in. Open Concrete Bridge Rail*, Final Report to the Nebraska Department of Roads, Project SPR-3(017), Transportation Report No. TRP-03-51-95, Midwest Roadside Safety Facility, University of Nebraska-Lincoln, June 1996.

63. Post, E.R., Hirsch, T.J., Hayes, G.G., and Nixon, J.F., *Vehicle Crash Test and Evaluation of Median Barriers for Texas Highways,* Texas Transportation Institute and Texas Highway Department, Highway Research Record No. 460, pp. 97-113, 1973.

64. Rowhani, P., Hawatky, S.M., Glauz, D.L., and Stoughton, R.L., *Vehicle Crash Tests of a Concrete Median Barrier Retrofitted with a Slipformed Concrete Glare Screen,* Final Report to Federal Highway Administration, Report No. FHWA/CA/TL-92/05, Division of New Technology, Materials and Research, California Department of Transportation, May 1992.

65. Nordlin, E.F., Juergens, W.R., Stoker, J.R., Stoughton, R.L., Doty, R.N., Tye, E.J., Pelkey, R.A., and Crozier, W.F., *Dynamic Tests of a Prestressed Concrete Median Barrier Type 50, Series XXVI,* Final Report to Federal Highway Administration, Report No. CA-HY-MR-6588-1-73-06, Materials and Research Department, California Division of Highways, March 1973.

66. Pfeifer, B.G., Faller, R.K., Ataullah, S., Holloway, J.C., and Post, E.R., *Full-Scale 4,500-lb Vehicle Crash Test on the Permanent Precast Concrete Median Barrier*, Final Report to the Kansas Department of Transportation, Report No. TRP-03-24-90, Project RES1 (0099) P451, Midwest Roadside Safety Facility, Civil Engineering Department, University of Nebraska-Lincoln, March 1991.

67. Bronstad, M.E., Calcote, L.R., and Kimball, Jr., C.E., *Concrete Median Barrier Research – Volume 2 Research Report,* Final Report to Federal Highway Administration, Report No. FHWA-RD-77-4, Southwest Research Institute, March 1976.

68. Hirsch, T.J., Marquis, E.L., Nixon, J.F., and Hustace, D., *Crash Test and Evaluation of a Precast Concrete Median Barrier,* Texas Transportation Institute and Texas Department of Highways and Public Transportation, Transportation Research Record No. 594, pp. 21-25, 1976.

69. Parks, D.M., Stoughton, R.L., Stoker, J.R., and Nordlin, E.F., *Vehicular Crash Test of a Continuous Concrete Median Barrier Without a Footing,* Final Report to Federal Highway Administration, Report No. FHWA-CA-TL-6883-77-22, Office of Transportation Laboratory, California Department of Transportation, August, 1977.

70. Nordlin, E.F., Field, R.N., Stoker, J.R., Pelkey, R.A., and Halterman, J.A., *Dynamic Tests of Concrete Median Barrier Series XVI,* Research Report, M&R No. 636392-2, HRR-222, Materials and Research Department, California Division of Highways, August 1967.

71. Nordlin, E.F., Woodstrom, J.H., Hackett, R.P., and Folsom, J.J., *Dynamic Tests of the California Type 20 Bridge Barrier Rail,* California Division of Highways, Highway Research Record No. 343, pp. 57-74, 1971.

72. Nordlin, E.F., Juergens, W.R., Tye, E.J., Stoker, J.R., Stoughton, R.L., Parks, D.M., *Dynamic Test of a Slipformed Concrete Barrier Type 50 Placed Over Lowered Existing Cable Barrier*, Organization Report No. CA-DOT-TL-6696-1-74-36, California Department of Transportation, December 1974.

73. Hirsch, T.J., Buth, C.E., Campise, W.L., and Kaderka, D., *Crash Test of Texas T202 Bridge Rail,* Research Report No. 1179-2F submitted to Federal Highway Administration, Report No. FHWA/TX-88/89/1179-2F, Texas Transportation Institute, Texas State Department of Highways and Public Transportation, May 1989.

74. Buth, C.E., Williams, W.F., Menges, W.L. and Schoeneman, S.K., *NCHRP Report 350 Test 4-10 of the Alaska Multi-State Bridge Rail*, Report for the Alaska Department of Transportation and Public Facilities, Report No. FHWA-RD-98, Texas Transportation Institute, December 1998.

75. Sicking, D.L., Mak, K.K., Rohde, J.R., Reid, J.D., *Recommended Procedures for the Safety Performance Evaluation of Highway Features, Draft Final Report*, Report submitted to the National Cooperative Highway Research Program (NCHRP), February 2007

76. Menges, W.L., Buth, C.E., Williams, W.F., and Schoeneman, S.K., *NCHRP Report 350 Test 4-11 of the Oregon 3-Tube Bridge Rail*, Report to Federal Highway Administration, Report No. FHWA-RD-00, Texas Transportation Institute, May 2000.

77. Buth, C.E., Menges, W.L., and Butler, B.G., *NCHRP Report 350 Test 3-21 of the Vertical Flared Back Transition*, Report to Federal Highway Administration, Report No. FHWA-RD-98, Texas Transportation Institute, October 1998.

78. Alberson, D.C., Menges, W.L., and Schoeneman, S.K., *NCHRP Report 350 Test 3-21 of the Ohio Transition at Non-Symmetrical Type 2 Transition Section,* Report to Federal Highway Administration, Texas Transportation Institute, October 2000.

79. Bullard, D.L., Sheikh, N.M., Bligh, R.P., Haug, R.R., Schutt, J.R., Storey, B.J., *Aesthetic Barrier Design,* National Cooperative Highway Research Program (NCHRP) Report 554, Transportation Research Board, Washington D.C., 2006.

80. *Building Code Requirements for Structural Concrete (ACI 318-05) and Commentary (ACI 318R-05): An ACI Standard*, Reported by ACI Committee 318, American Concrete Institute, Farmington Hills, MI, August 2005.

81. Faller, R.K., et al., *Development of a Stand-Alone Concrete Bridge Pier Protection System*, Draft Report in Progress, Transportation Report No. TRP-03-190-07, Midwest Roadside Safety Facility, University of Nebraska-Lincoln, 2007.

82. Hinch, J., Yang, T.L., and Owings, R., *Guidance Systems for Vehicle Testing*, ENSCO, Inc., Springfield, VA, 1986.

13 APPENDICES

Appendix A. Interior Section Barrier Configurations and Calculations

Table A-1. Interior Section Strength and Cost Calculations for All Configurations

Table A-1. Interior Section Strength and Cost Calculations - All Configurations

Top Width (in)	Base Width (in)	Concrete Volume (yd^3 / ft)	Stirrups					Longitudinal Steel				Weight of Steel (lb / ft)	Cost of Steel ($ / ft)	Cost of Concrete ($ / ft)	Yield Line Calculations		Total Cost ($ / ft)
			Bar #	Spacing (in)	Length (in)	Length / ft (ft / ft)	M_C (k-ft / ft)	Bar #	Quantity	A_s (in^2)	M_w (k-ft / ft)				L_{CR} (ft)	ΦR_w (kips)	
4	24.125	0.23	3	12	109.34	9.11	12.50	3	5	0.55	8.06	5.31	$5.41	$18.56	11.58	***91.9***	$23.97
4	24.125	0.23	3	12	109.34	9.11	12.50	3	7	0.77	12.03	6.06	$6.18	$18.56	12.82	***101.8***	$24.74
4	24.125	0.23	3	12	109.34	9.11	12.50	3	9	0.99	15.94	6.81	$6.95	$18.56	13.89	***110.3***	$25.50
4	24.125	0.23	3	12	109.34	9.11	12.50	3	11	1.21	19.82	7.56	$7.71	$18.56	14.86	***118.0***	$26.27
4	24.125	0.23	3	12	109.34	9.11	12.50	3	13	1.43	23.65	8.31	$8.48	$18.56	15.73	***124.9***	$27.04
4	24.125	0.23	3	12	109.34	9.11	12.50	4	5	1.00	14.53	6.77	$6.90	$18.56	13.52	***107.4***	$25.46
4	24.125	0.23	3	12	109.34	9.11	12.50	4	7	1.40	21.59	8.10	$8.26	$18.56	15.27	***121.2***	$26.82
4	24.125	0.23	3	12	109.34	9.11	12.50	4	9	1.80	28.47	9.44	$9.63	$18.56	16.74	***132.9***	$28.18
4	24.125	0.23	3	12	109.34	9.11	12.50	4	11	2.20	35.24	10.77	$10.99	$18.56	18.04	***143.2***	$29.55
4	24.125	0.23	3	12	109.34	9.11	12.50	4	13	2.60	41.82	12.11	$12.35	$18.56	19.19	***152.4***	$30.91
4	24.125	0.23	3	12	109.34	9.11	12.50	5	5	1.55	22.26	8.64	$8.81	$18.56	15.42	***122.4***	$27.37
4	24.125	0.23	3	12	109.34	9.11	12.50	5	7	2.17	32.88	10.73	$10.94	$18.56	17.60	***139.8***	$29.50
4	24.125	0.23	3	12	109.34	9.11	12.50	5	9	2.79	43.15	12.81	$13.07	$18.56	19.42	***154.2***	$31.63
4	24.125	0.23	3	12	109.34	9.11	12.50	5	11	3.41	53.00	14.90	$15.20	$18.56	20.98	***166.6***	$33.76
4	24.125	0.23	3	12	109.34	9.11	12.50	5	13	4.03	62.00	16.98	$17.32	$18.56	22.29	***177.0***	$35.88
4	24.125	0.23	3	12	109.34	9.11	12.50	6	5	2.20	31.21	10.94	$11.15	$18.56	17.28	***137.2***	$29.71
4	24.125	0.23	3	12	109.34	9.11	12.50	6	7	3.08	45.74	13.94	$14.22	$18.56	19.84	***157.6***	$32.78
4	24.125	0.23	3	12	109.34	9.11	12.50	6	9	3.96	59.18	16.94	$17.28	$18.56	21.89	***173.8***	$35.84
4	24.125	0.23	3	12	109.34	9.11	12.50	6	11	4.84	71.24	19.95	$20.35	$18.56	23.54	***187.0***	$38.91
4	24.125	0.23	3	12	109.34	9.11	12.50	6	13	5.72	82.91	22.95	$23.41	$18.56	25.02	***198.7***	$41.97
4	24.125	0.23	3	18	109.34	6.07	8.33	3	5	0.55	8.06	4.16	$4.25	$18.56	12.84	***68.0***	$22.81
4	24.125	0.23	3	18	109.34	6.07	8.33	3	7	0.77	12.03	4.92	$5.01	$18.56	14.43	***76.4***	$23.57
4	24.125	0.23	3	18	109.34	6.07	8.33	3	9	0.99	15.94	5.67	$5.78	$18.56	15.78	***83.6***	$24.34
4	24.125	0.23	3	18	109.34	6.07	8.33	3	11	1.21	19.82	6.42	$6.55	$18.56	16.99	***90.0***	$25.11
4	24.125	0.23	3	18	109.34	6.07	8.33	3	13	1.43	23.65	7.17	$7.32	$18.56	18.08	***95.7***	$25.87
4	24.125	0.23	3	18	109.34	6.07	8.33	4	5	1.00	14.53	5.62	$5.74	$18.56	15.31	***81.1***	$24.29
4	24.125	0.23	3	18	109.34	6.07	8.33	4	7	1.40	21.59	6.96	$7.10	$18.56	17.50	***92.7***	$25.66
4	24.125	0.23	3	18	109.34	6.07	8.33	4	9	1.80	28.47	8.30	$8.46	$18.56	19.34	***102.4***	$27.02
4	24.125	0.23	3	18	109.34	6.07	8.33	4	11	2.20	35.24	9.63	$9.82	$18.56	20.96	***110.9***	$28.38
4	24.125	0.23	3	18	109.34	6.07	8.33	4	13	2.60	41.82	10.97	$11.19	$18.56	22.39	***118.6***	$29.75
4	24.125	0.23	3	18	109.34	6.07	8.33	5	5	1.55	22.26	7.50	$7.65	$18.56	17.70	***93.7***	$26.21
4	24.125	0.23	3	18	109.34	6.07	8.33	5	7	2.17	32.88	9.58	$9.78	$18.56	20.41	***108.1***	$28.33
4	24.125	0.23	3	18	109.34	6.07	8.33	5	9	2.79	43.15	11.67	$11.90	$18.56	22.67	***120.0***	$30.46
4	24.125	0.23	3	18	109.34	6.07	8.33	5	11	3.41	53.00	13.76	$14.03	$18.56	24.60	***130.2***	$32.59
4	24.125	0.23	3	18	109.34	6.07	8.33	5	13	4.03	62.00	15.84	$16.16	$18.56	26.22	***138.8***	$34.72
4	24.125	0.23	3	18	109.34	6.07	8.33	6	5	2.20	31.21	9.79	$9.99	$18.56	20.02	***106.0***	$28.55
4	24.125	0.23	3	18	109.34	6.07	8.33	6	7	3.08	45.74	12.80	$13.05	$18.56	23.20	***122.8***	$31.61
4	24.125	0.23	3	18	109.34	6.07	8.33	6	9	3.96	59.18	15.80	$16.12	$18.56	25.73	***136.2***	$34.68
4	24.125	0.23	3	18	109.34	6.07	8.33	6	11	4.84	71.24	18.81	$19.18	$18.56	27.77	***147.0***	$37.74
4	24.125	0.23	3	18	109.34	6.07	8.33	6	13	5.72	82.91	21.81	$22.25	$18.56	29.59	***156.7***	$40.80

White Text - inadequate temperature and shrinkage steel
Italic Text - inadequate structural capacity
Highlighted Row - good design – valid for use

1 in. = 25.4 mm
1 ft = 0.3048 m
1 kip = 4.448 kN

Table A-1 (continued). Interior Section Strength and Cost Calculations for All Configurations

Top Width (in)	Base Width (in)	Concrete Volume (yd^3 / ft)	Stirrups					Longitudinal Steel				Weight of Steel (lb / ft)	Cost of Steel ($ / ft)	Cost of Concrete ($ / ft)	Yield Line Calculations		Total Cost ($ / ft)
			Bar #	Spacing (in)	Length (in)	Length / ft (ft / ft)	M_C (k-ft / ft)	Bar #	Quantity	A_s (in^2)	M_w (k-ft / ft)				L_{CR} (ft)	ΦR_w (kips)	
4	24.125	0.23	3	24	109.34	4.56	6.29	3	5	0.55	8.06	3.59	$3.66	$18.56	13.91	***55.6***	$22.22
4	24.125	0.23	3	24	109.34	4.56	6.29	3	7	0.77	12.03	4.34	$4.43	$18.56	15.78	***63.1***	$22.99
4	24.125	0.23	3	24	109.34	4.56	6.29	3	9	0.99	15.94	5.10	$5.20	$18.56	17.37	***69.4***	$23.76
4	24.125	0.23	3	24	109.34	4.56	6.29	3	11	1.21	19.82	5.85	$5.97	$18.56	18.78	***75.1***	$24.52
4	24.125	0.23	3	24	109.34	4.56	6.29	3	13	1.43	23.65	6.60	$6.73	$18.56	20.04	***80.1***	$25.29
4	24.125	0.23	3	24	109.34	4.56	6.29	4	5	1.00	14.53	5.05	$5.15	$18.56	16.82	***67.2***	$23.71
4	24.125	0.23	3	24	109.34	4.56	6.29	4	7	1.40	21.59	6.39	$6.52	$18.56	19.37	***77.4***	$25.07
4	24.125	0.23	3	24	109.34	4.56	6.29	4	9	1.80	28.47	7.72	$7.88	$18.56	21.51	***86.0***	$26.44
4	24.125	0.23	3	24	109.34	4.56	6.29	4	11	2.20	35.24	9.06	$9.24	$18.56	23.38	***93.5***	$27.80
4	24.125	0.23	3	24	109.34	4.56	6.29	4	13	2.60	41.82	10.40	$10.60	$18.56	25.05	***100.1***	$29.16
4	24.125	0.23	3	24	109.34	4.56	6.29	5	5	1.55	22.26	6.93	$7.07	$18.56	19.60	***78.3***	$25.62
4	24.125	0.23	3	24	109.34	4.56	6.29	5	7	2.17	32.88	9.01	$9.19	$18.56	22.75	***90.9***	$27.75
4	24.125	0.23	3	24	109.34	4.56	6.29	5	9	2.79	43.15	11.10	$11.32	$18.56	25.36	***101.4***	$29.88
4	24.125	0.23	3	24	109.34	4.56	6.29	5	11	3.41	53.00	13.19	$13.45	$18.56	27.60	***110.3***	$32.01
4	24.125	0.23	3	24	109.34	4.56	6.29	5	13	4.03	62.00	15.27	$15.58	$18.56	29.47	***117.8***	$34.14
4	24.125	0.23	3	24	109.34	4.56	6.29	6	5	2.20	31.21	9.22	$9.41	$18.56	22.29	***89.1***	$27.97
4	24.125	0.23	3	24	109.34	4.56	6.29	6	7	3.08	45.74	12.23	$12.47	$18.56	25.97	***103.8***	$31.03
4	24.125	0.23	3	24	109.34	4.56	6.29	6	9	3.96	59.18	15.23	$15.54	$18.56	28.90	***115.5***	$34.09
4	24.125	0.23	3	24	109.34	4.56	6.29	6	11	4.84	71.24	18.23	$18.60	$18.56	31.26	***125.0***	$37.16
4	24.125	0.23	3	24	109.34	4.56	6.29	6	13	5.72	82.91	21.24	$21.66	$18.56	33.37	***133.4***	$40.22
4	24.125	0.23	3	30	109.34	3.64	5.03	3	5	0.55	8.06	3.25	$3.32	$18.56	14.90	***47.6***	$21.87
4	24.125	0.23	3	30	109.34	3.64	5.03	3	7	0.77	12.03	4.00	$4.08	$18.56	17.02	***54.4***	$22.64
4	24.125	0.23	3	30	109.34	3.64	5.03	3	9	0.99	15.94	4.75	$4.85	$18.56	18.81	***60.2***	$23.41
4	24.125	0.23	3	30	109.34	3.64	5.03	3	11	1.21	19.82	5.51	$5.62	$18.56	20.40	***65.2***	$24.17
4	24.125	0.23	3	30	109.34	3.64	5.03	3	13	1.43	23.65	6.26	$6.38	$18.56	21.82	***69.8***	$24.94
4	24.125	0.23	3	30	109.34	3.64	5.03	4	5	1.00	14.53	4.71	$4.80	$18.56	18.19	***58.2***	$23.36
4	24.125	0.23	3	30	109.34	3.64	5.03	4	7	1.40	21.59	6.05	$6.17	$18.56	21.07	***67.4***	$24.73
4	24.125	0.23	3	30	109.34	3.64	5.03	4	9	1.80	28.47	7.38	$7.53	$18.56	23.47	***75.1***	$26.09
4	24.125	0.23	3	30	109.34	3.64	5.03	4	11	2.20	35.24	8.72	$8.89	$18.56	25.58	***81.8***	$27.45
4	24.125	0.23	3	30	109.34	3.64	5.03	4	13	2.60	41.82	10.05	$10.26	$18.56	27.44	***87.8***	$28.81
4	24.125	0.23	3	30	109.34	3.64	5.03	5	5	1.55	22.26	6.59	$6.72	$18.56	21.32	***68.2***	$25.28
4	24.125	0.23	3	30	109.34	3.64	5.03	5	7	2.17	32.88	8.67	$8.84	$18.56	24.87	***79.5***	$27.40
4	24.125	0.23	3	30	109.34	3.64	5.03	5	9	2.79	43.15	10.76	$10.97	$18.56	27.80	***88.9***	$29.53
4	24.125	0.23	3	30	109.34	3.64	5.03	5	11	3.41	53.00	12.84	$13.10	$18.56	30.31	***96.9***	$31.66
4	24.125	0.23	3	30	109.34	3.64	5.03	5	13	4.03	62.00	14.93	$15.23	$18.56	32.41	***103.6***	$33.79
4	24.125	0.23	3	30	109.34	3.64	5.03	6	5	2.20	31.21	8.88	$9.06	$18.56	24.35	***77.9***	$27.62
4	24.125	0.23	3	30	109.34	3.64	5.03	6	7	3.08	45.74	11.88	$12.12	$18.56	28.49	***91.1***	$30.68
4	24.125	0.23	3	30	109.34	3.64	5.03	6	9	3.96	59.18	14.89	$15.19	$18.56	31.77	***101.6***	$33.74
4	24.125	0.23	3	30	109.34	3.64	5.03	6	11	4.84	71.24	17.89	$18.25	$18.56	34.41	***110.0***	$36.81
4	24.125	0.23	3	30	109.34	3.64	5.03	6	13	5.72	82.91	20.90	$21.31	$18.56	36.77	***117.6***	$39.87

White Text - inadequate temperature and shrinkage steel
Italic Text - inadequate structural capacity
Highlighted Row - good design – valid for use

1 in. = 25.4 mm
1 ft = 0.3048 m
1 kip = 4.448 kN

Table A-1 (continued). Interior Section Strength and Cost Calculations for All Configurations

Top Width (in)	Base Width (in)	Concrete Volume (yd^3 / ft)	Stirrups					Longitudinal Steel				Weight of Steel (lb / ft)	Cost of Steel ($ / ft)	Cost of Concrete ($ / ft)	Yield Line Calculations		Total Cost ($ / ft)
			Bar #	Spacing (in)	Length (in)	Length / ft (ft / ft)	M_C (k-ft / ft)	Bar #	Quantity	A_s (in^2)	M_w (k-ft / ft)				L_{CR} (ft)	ΦR_w (kips)	
4	24.125	0.23	3	36	109.34	3.04	4.19	3	5	0.55	8.06	3.02	$3.08	$18.56	15.81	***42.1***	$21.64
4	24.125	0.23	3	36	109.34	3.04	4.19	3	7	0.77	12.03	3.77	$3.85	$18.56	18.15	***48.4***	$22.41
4	24.125	0.23	3	36	109.34	3.04	4.19	3	9	0.99	15.94	4.53	$4.62	$18.56	20.13	***53.6***	$23.17
4	24.125	0.23	3	36	109.34	3.04	4.19	3	11	1.21	19.82	5.28	$5.38	$18.56	21.88	***58.3***	$23.94
4	24.125	0.23	3	36	109.34	3.04	4.19	3	13	1.43	23.65	6.03	$6.15	$18.56	23.44	***62.5***	$24.71
4	24.125	0.23	3	36	109.34	3.04	4.19	4	5	1.00	14.53	4.48	$4.57	$18.56	19.44	***51.8***	$23.13
4	24.125	0.23	3	36	109.34	3.04	4.19	4	7	1.40	21.59	5.82	$5.93	$18.56	22.62	***60.3***	$24.49
4	24.125	0.23	3	36	109.34	3.04	4.19	4	9	1.80	28.47	7.15	$7.30	$18.56	25.26	***67.3***	$25.86
4	24.125	0.23	3	36	109.34	3.04	4.19	4	11	2.20	35.24	8.49	$8.66	$18.56	27.57	***73.5***	$27.22
4	24.125	0.23	3	36	109.34	3.04	4.19	4	13	2.60	41.82	9.83	$10.02	$18.56	29.62	***78.9***	$28.58
4	24.125	0.23	3	36	109.34	3.04	4.19	5	5	1.55	22.26	6.36	$6.48	$18.56	22.89	***61.0***	$25.04
4	24.125	0.23	3	36	109.34	3.04	4.19	5	7	2.17	32.88	8.44	$8.61	$18.56	26.79	***71.4***	$27.17
4	24.125	0.23	3	36	109.34	3.04	4.19	5	9	2.79	43.15	10.53	$10.74	$18.56	30.01	***80.0***	$29.30
4	24.125	0.23	3	36	109.34	3.04	4.19	5	11	3.41	53.00	12.61	$12.87	$18.56	32.77	***87.3***	$31.43
4	24.125	0.23	3	36	109.34	3.04	4.19	5	13	4.03	62.00	14.70	$14.99	$18.56	35.07	***93.4***	$33.55
4	24.125	0.23	3	36	109.34	3.04	4.19	6	5	2.20	31.21	8.65	$8.82	$18.56	26.22	***69.9***	$27.38
4	24.125	0.23	3	36	109.34	3.04	4.19	6	7	3.08	45.74	11.66	$11.89	$18.56	30.76	***82.0***	$30.45
4	24.125	0.23	3	36	109.34	3.04	4.19	6	9	3.96	59.18	14.66	$14.95	$18.56	34.37	***91.6***	$33.51
4	24.125	0.23	3	36	109.34	3.04	4.19	6	11	4.84	71.24	17.66	$18.02	$18.56	37.27	***99.3***	$36.58
4	24.125	0.23	3	36	109.34	3.04	4.19	6	13	5.72	82.91	20.67	$21.08	$18.56	39.85	***106.2***	$39.64
4	24.125	0.23	4	12	110.91	9.24	22.42	3	5	0.55	8.06	8.05	$8.21	$18.56	10.25	***146.0***	$26.77
4	24.125	0.23	4	12	110.91	9.24	22.42	3	7	0.77	12.03	8.81	$8.98	$18.56	11.10	***158.1***	$27.54
4	24.125	0.23	4	12	110.91	9.24	22.42	3	9	0.99	15.94	9.56	$9.75	$18.56	11.85	***168.8***	$28.31
4	24.125	0.23	4	12	110.91	9.24	22.42	3	11	1.21	19.82	10.31	$10.52	$18.56	12.53	***178.5***	$29.07
4	24.125	0.23	4	12	110.91	9.24	22.42	3	13	1.43	23.65	11.06	$11.28	$18.56	13.15	***187.3***	$29.84
4	24.125	0.23	4	12	110.91	9.24	22.42	4	5	1.00	14.53	9.51	$9.70	$18.56	11.59	***165.1***	$28.26
4	24.125	0.23	4	12	110.91	9.24	22.42	4	7	1.40	21.59	10.85	$11.07	$18.56	12.82	***182.6***	$29.63
4	24.125	0.23	4	12	110.91	9.24	22.42	4	9	1.80	28.47	12.19	$12.43	$18.56	13.88	***197.6***	$30.99
4	24.125	0.23	4	12	110.91	9.24	22.42	4	11	2.20	35.24	13.52	$13.79	$18.56	14.81	***211.0***	$32.35
4	24.125	0.23	4	12	110.91	9.24	22.42	4	13	2.60	41.82	14.86	$15.15	$18.56	15.65	222.9	$33.71
4	24.125	0.23	4	12	110.91	9.24	22.42	5	5	1.55	22.26	11.39	$11.62	$18.56	12.93	***184.2***	$30.17
4	24.125	0.23	4	12	110.91	9.24	22.42	5	7	2.17	32.88	13.47	$13.74	$18.56	14.50	***206.5***	$32.30
4	24.125	0.23	4	12	110.91	9.24	22.42	5	9	2.79	43.15	15.56	$15.87	$18.56	15.82	225.2	$34.43
4	24.125	0.23	4	12	110.91	9.24	22.42	5	11	3.41	53.00	17.65	$18.00	$18.56	16.96	241.5	$36.56
4	24.125	0.23	4	12	110.91	9.24	22.42	5	13	4.03	62.00	19.73	$20.13	$18.56	17.91	255.1	$38.69
4	24.125	0.23	4	12	110.91	9.24	22.42	6	5	2.20	31.21	13.68	$13.96	$18.56	14.27	***203.2***	$32.52
4	24.125	0.23	4	12	110.91	9.24	22.42	6	7	3.08	45.74	16.69	$17.02	$18.56	16.13	229.6	$35.58
4	24.125	0.23	4	12	110.91	9.24	22.42	6	9	3.96	59.18	19.69	$20.09	$18.56	17.62	250.9	$38.64
4	24.125	0.23	4	12	110.91	9.24	22.42	6	11	4.84	71.24	22.70	$23.15	$18.56	18.84	268.2	$41.71
4	24.125	0.23	4	12	110.91	9.24	22.42	6	13	5.72	82.91	25.70	$26.21	$18.56	19.92	283.7	$44.77

White Text - inadequate temperature and shrinkage steel
Italic Text - inadequate structural capacity
Highlighted Row - good design – valid for use

1 in. = 25.4 mm
1 ft = 0.3048 m
1 kip = 4.448 kN

Table A-1 (continued). Interior Section Strength and Cost Calculations for All Configurations

Top Width (in)	Base Width (in)	Concrete Volume (yd^3 / ft)	Stirrups					Longitudinal Steel				Weight of Steel (lb / ft)	Cost of Steel ($ / ft)	Cost of Concrete ($ / ft)	Yield Line Calculations		Total Cost ($ / ft)
			Bar #	Spacing (in)	Length (in)	Length / ft (ft / ft)	M_C (k-ft / ft)	Bar #	Quantity	A_s (in^2)	M_w (k-ft / ft)				L_{CR} (ft)	ΦR_w (kips)	
4	24.125	0.23	4	18	110.91	6.16	15.06	3	5	0.55	8.06	6.00	$6.12	$18.56	11.10	***106.1***	$24.67
4	24.125	0.23	4	18	110.91	6.16	15.06	3	7	0.77	12.03	6.75	$6.88	$18.56	12.20	***116.7***	$25.44
4	24.125	0.23	4	18	110.91	6.16	15.06	3	9	0.99	15.94	7.50	$7.65	$18.56	13.17	***125.9***	$26.21
4	24.125	0.23	4	18	110.91	6.16	15.06	3	11	1.21	19.82	8.25	$8.42	$18.56	14.03	***134.2***	$26.98
4	24.125	0.23	4	18	110.91	6.16	15.06	3	13	1.43	23.65	9.00	$9.18	$18.56	14.81	***141.7***	$27.74
4	24.125	0.23	4	18	110.91	6.16	15.06	4	5	1.00	14.53	7.46	$7.60	$18.56	12.83	***122.7***	$26.16
4	24.125	0.23	4	18	110.91	6.16	15.06	4	7	1.40	21.59	8.79	$8.97	$18.56	14.40	***137.7***	$27.53
4	24.125	0.23	4	18	110.91	6.16	15.06	4	9	1.80	28.47	10.13	$10.33	$18.56	15.72	***150.4***	$28.89
4	24.125	0.23	4	18	110.91	6.16	15.06	4	11	2.20	35.24	11.46	$11.69	$18.56	16.90	***161.6***	$30.25
4	24.125	0.23	4	18	110.91	6.16	15.06	4	13	2.60	41.82	12.80	$13.06	$18.56	17.94	***171.6***	$31.61
4	24.125	0.23	4	18	110.91	6.16	15.06	5	5	1.55	22.26	9.33	$9.52	$18.56	14.53	***139.0***	$28.08
4	24.125	0.23	4	18	110.91	6.16	15.06	5	7	2.17	32.88	11.42	$11.65	$18.56	16.50	***157.8***	$30.20
4	24.125	0.23	4	18	110.91	6.16	15.06	5	9	2.79	43.15	13.50	$13.77	$18.56	18.14	***173.5***	$32.33
4	24.125	0.23	4	18	110.91	6.16	15.06	5	11	3.41	53.00	15.59	$15.90	$18.56	19.56	***187.1***	$34.46
4	24.125	0.23	4	18	110.91	6.16	15.06	5	13	4.03	62.00	17.67	$18.03	$18.56	20.75	***198.4***	$36.59
4	24.125	0.23	4	18	110.91	6.16	15.06	6	5	2.20	31.21	11.63	$11.86	$18.56	16.21	***155.1***	$30.42
4	24.125	0.23	4	18	110.91	6.16	15.06	6	7	3.08	45.74	14.63	$14.92	$18.56	18.53	***177.2***	$33.48
4	24.125	0.23	4	18	110.91	6.16	15.06	6	9	3.96	59.18	17.63	$17.99	$18.56	20.38	***195.0***	$36.54
4	24.125	0.23	4	18	110.91	6.16	15.06	6	11	4.84	71.24	20.64	$21.05	$18.56	21.88	***209.3***	$39.61
4	24.125	0.23	4	18	110.91	6.16	15.06	6	13	5.72	82.91	23.64	$24.11	$18.56	23.23	222.2	$42.67
4	24.125	0.23	4	24	110.91	4.62	11.33	3	5	0.55	8.06	4.97	$5.07	$18.56	11.85	***85.3***	$23.62
4	24.125	0.23	4	24	110.91	4.62	11.33	3	7	0.77	12.03	5.72	$5.83	$18.56	13.17	***94.9***	$24.39
4	24.125	0.23	4	24	110.91	4.62	11.33	3	9	0.99	15.94	6.47	$6.60	$18.56	14.31	***103.0***	$25.16
4	24.125	0.23	4	24	110.91	4.62	11.33	3	11	1.21	19.82	7.22	$7.37	$18.56	15.33	***110.4***	$25.93
4	24.125	0.23	4	24	110.91	4.62	11.33	3	13	1.43	23.65	7.97	$8.13	$18.56	16.25	***117.0***	$26.69
4	24.125	0.23	4	24	110.91	4.62	11.33	4	5	1.00	14.53	6.43	$6.56	$18.56	13.92	***100.2***	$25.11
4	24.125	0.23	4	24	110.91	4.62	11.33	4	7	1.40	21.59	7.76	$7.92	$18.56	15.76	***113.5***	$26.48
4	24.125	0.23	4	24	110.91	4.62	11.33	4	9	1.80	28.47	9.10	$9.28	$18.56	17.32	***124.7***	$27.84
4	24.125	0.23	4	24	110.91	4.62	11.33	4	11	2.20	35.24	10.43	$10.64	$18.56	18.69	***134.5***	$29.20
4	24.125	0.23	4	24	110.91	4.62	11.33	4	13	2.60	41.82	11.77	$12.01	$18.56	19.91	***143.3***	$30.56
4	24.125	0.23	4	24	110.91	4.62	11.33	5	5	1.55	22.26	8.30	$8.47	$18.56	15.92	***114.6***	$27.03
4	24.125	0.23	4	24	110.91	4.62	11.33	5	7	2.17	32.88	10.39	$10.60	$18.56	18.22	***131.2***	$29.15
4	24.125	0.23	4	24	110.91	4.62	11.33	5	9	2.79	43.15	12.47	$12.72	$18.56	20.14	***145.0***	$31.28
4	24.125	0.23	4	24	110.91	4.62	11.33	5	11	3.41	53.00	14.56	$14.85	$18.56	21.79	***156.9***	$33.41
4	24.125	0.23	4	24	110.91	4.62	11.33	5	13	4.03	62.00	16.65	$16.98	$18.56	23.17	***166.8***	$35.54
4	24.125	0.23	4	24	110.91	4.62	11.33	6	5	2.20	31.21	10.60	$10.81	$18.56	17.89	***128.8***	$29.37
4	24.125	0.23	4	24	110.91	4.62	11.33	6	7	3.08	45.74	13.60	$13.87	$18.56	20.59	***148.2***	$32.43
4	24.125	0.23	4	24	110.91	4.62	11.33	6	9	3.96	59.18	16.60	$16.94	$18.56	22.74	***163.8***	$35.50
4	24.125	0.23	4	24	110.91	4.62	11.33	6	11	4.84	71.24	19.61	$20.00	$18.56	24.49	***176.3***	$38.56
4	24.125	0.23	4	24	110.91	4.62	11.33	6	13	5.72	82.91	22.61	$23.07	$18.56	26.04	***187.5***	$41.62

White Text - inadequate temperature and shrinkage steel
Italic Text - inadequate structural capacity
Highlighted Row - good design – valid for use

1 in. = 25.4 mm
1 ft = 0.3048 m
1 kip = 4.448 kN

Table A-1 (continued). Interior Section Strength and Cost Calculations for All Configurations

Top Width (in)	Base Width (in)	Concrete Volume (yd^3 / ft)	Stirrups					Longitudinal Steel				Weight of Steel (lb / ft)	Cost of Steel ($ / ft)	Cost of Concrete ($ / ft)	Yield Line Calculations		Total Cost ($ / ft)
			Bar #	Spacing (in)	Length (in)	Length / ft (ft / ft)	M_C (k-ft / ft)	Bar #	Quantity	A_s (in^2)	M_w (k-ft / ft)				L_{CR} (ft)	ΦR_w (kips)	
4	24.125	0.23	4	30	110.91	3.70	9.10	3	5	0.55	8.06	4.35	$4.44	$18.56	12.54	***72.5***	$22.99
4	24.125	0.23	4	30	110.91	3.70	9.10	3	7	0.77	12.03	5.10	$5.20	$18.56	14.04	***81.2***	$23.76
4	24.125	0.23	4	30	110.91	3.70	9.10	3	9	0.99	15.94	5.85	$5.97	$18.56	15.34	***88.7***	$24.53
4	24.125	0.23	4	30	110.91	3.70	9.10	3	11	1.21	19.82	6.61	$6.74	$18.56	16.49	***95.3***	$25.30
4	24.125	0.23	4	30	110.91	3.70	9.10	3	13	1.43	23.65	7.36	$7.50	$18.56	17.52	***101.3***	$26.06
4	24.125	0.23	4	30	110.91	3.70	9.10	4	5	1.00	14.53	5.81	$5.93	$18.56	14.89	***86.1***	$24.48
4	24.125	0.23	4	30	110.91	3.70	9.10	4	7	1.40	21.59	7.15	$7.29	$18.56	16.98	***98.1***	$25.85
4	24.125	0.23	4	30	110.91	3.70	9.10	4	9	1.80	28.47	8.48	$8.65	$18.56	18.73	***108.3***	$27.21
4	24.125	0.23	4	30	110.91	3.70	9.10	4	11	2.20	35.24	9.82	$10.01	$18.56	20.27	***117.2***	$28.57
4	24.125	0.23	4	30	110.91	3.70	9.10	4	13	2.60	41.82	11.15	$11.38	$18.56	21.64	***125.1***	$29.93
4	24.125	0.23	4	30	110.91	3.70	9.10	5	5	1.55	22.26	7.68	$7.84	$18.56	17.16	***99.2***	$26.40
4	24.125	0.23	4	30	110.91	3.70	9.10	5	7	2.17	32.88	9.77	$9.97	$18.56	19.75	***114.2***	$28.52
4	24.125	0.23	4	30	110.91	3.70	9.10	5	9	2.79	43.15	11.86	$12.09	$18.56	21.90	***126.6***	$30.65
4	24.125	0.23	4	30	110.91	3.70	9.10	5	11	3.41	53.00	13.94	$14.22	$18.56	23.75	***137.3***	$32.78
4	24.125	0.23	4	30	110.91	3.70	9.10	5	13	4.03	62.00	16.03	$16.35	$18.56	25.30	***146.2***	$34.91
4	24.125	0.23	4	30	110.91	3.70	9.10	6	5	2.20	31.21	9.98	$10.18	$18.56	19.37	***112.0***	$28.74
4	24.125	0.23	4	30	110.91	3.70	9.10	6	7	3.08	45.74	12.98	$13.24	$18.56	22.41	***129.5***	$31.80
4	24.125	0.23	4	30	110.91	3.70	9.10	6	9	3.96	59.18	15.99	$16.31	$18.56	24.82	***143.5***	$34.87
4	24.125	0.23	4	30	110.91	3.70	9.10	6	11	4.84	71.24	18.99	$19.37	$18.56	26.78	***154.8***	$37.93
4	24.125	0.23	4	30	110.91	3.70	9.10	6	13	5.72	82.91	22.00	$22.44	$18.56	28.52	***164.9***	$40.99
4	24.125	0.23	4	36	110.91	3.08	7.61	3	5	0.55	8.06	3.94	$4.02	$18.56	13.17	***63.7***	$22.57
4	24.125	0.23	4	36	110.91	3.08	7.61	3	7	0.77	12.03	4.69	$4.78	$18.56	14.84	***71.8***	$23.34
4	24.125	0.23	4	36	110.91	3.08	7.61	3	9	0.99	15.94	5.44	$5.55	$18.56	16.27	***78.7***	$24.11
4	24.125	0.23	4	36	110.91	3.08	7.61	3	11	1.21	19.82	6.19	$6.32	$18.56	17.54	***84.8***	$24.88
4	24.125	0.23	4	36	110.91	3.08	7.61	3	13	1.43	23.65	6.95	$7.08	$18.56	18.68	***90.3***	$25.64
4	24.125	0.23	4	36	110.91	3.08	7.61	4	5	1.00	14.53	5.40	$5.51	$18.56	15.77	***76.3***	$24.06
4	24.125	0.23	4	36	110.91	3.08	7.61	4	7	1.40	21.59	6.73	$6.87	$18.56	18.08	***87.4***	$25.43
4	24.125	0.23	4	36	110.91	3.08	7.61	4	9	1.80	28.47	8.07	$8.23	$18.56	20.01	***96.7***	$26.79
4	24.125	0.23	4	36	110.91	3.08	7.61	4	11	2.20	35.24	9.41	$9.59	$18.56	21.70	***104.9***	$28.15
4	24.125	0.23	4	36	110.91	3.08	7.61	4	13	2.60	41.82	10.74	$10.96	$18.56	23.21	***112.2***	$29.52
4	24.125	0.23	4	36	110.91	3.08	7.61	5	5	1.55	22.26	7.27	$7.42	$18.56	18.28	***88.4***	$25.98
4	24.125	0.23	4	36	110.91	3.08	7.61	5	7	2.17	32.88	9.36	$9.55	$18.56	21.13	***102.2***	$28.10
4	24.125	0.23	4	36	110.91	3.08	7.61	5	9	2.79	43.15	11.44	$11.67	$18.56	23.50	***113.6***	$30.23
4	24.125	0.23	4	36	110.91	3.08	7.61	5	11	3.41	53.00	13.53	$13.80	$18.56	25.52	***123.4***	$32.36
4	24.125	0.23	4	36	110.91	3.08	7.61	5	13	4.03	62.00	15.62	$15.93	$18.56	27.22	***131.6***	$34.49
4	24.125	0.23	4	36	110.91	3.08	7.61	6	5	2.20	31.21	9.57	$9.76	$18.56	20.71	***100.2***	$28.32
4	24.125	0.23	4	36	110.91	3.08	7.61	6	7	3.08	45.74	12.57	$12.82	$18.56	24.05	***116.3***	$31.38
4	24.125	0.23	4	36	110.91	3.08	7.61	6	9	3.96	59.18	15.58	$15.89	$18.56	26.70	***129.1***	$34.45
4	24.125	0.23	4	36	110.91	3.08	7.61	6	11	4.84	71.24	18.58	$18.95	$18.56	28.84	***139.5***	$37.51
4	24.125	0.23	4	36	110.91	3.08	7.61	6	13	5.72	82.91	21.58	$22.02	$18.56	30.75	***148.7***	$40.57

White Text - inadequate temperature and shrinkage steel
Italic Text - inadequate structural capacity
Highlighted Row - good design – valid for use

1 in. = 25.4 mm
1 ft = 0.3048 m
1 kip = 4.448 kN

Table A-1 (continued). Interior Section Strength and Cost Calculations for All Configurations

Top Width (in)	Base Width (in)	Concrete Volume (yd^3 / ft)	Stirrups					Longitudinal Steel				Weight of Steel (lb / ft)	Cost of Steel ($ / ft)	Cost of Concrete ($ / ft)	Yield Line Calculations		Total Cost ($ / ft)
			Bar #	Spacing (in)	Length (in)	Length / ft (ft / ft)	M_C (k-ft / ft)	Bar #	Quantity	A_s (in^2)	M_w (k-ft / ft)				L_{CR} (ft)	ΦR_w (kips)	
4	24.125	0.23	5	12	111.60	9.30	34.25	3	5	0.55	8.06	11.58	$11.81	$18.56	9.58	***208.4***	$30.37
4	24.125	0.23	5	12	111.60	9.30	34.25	3	7	0.77	12.03	12.33	$12.58	$18.56	10.21	222.1	$31.14
4	24.125	0.23	5	12	111.60	9.30	34.25	3	9	0.99	15.94	13.08	$13.35	$18.56	10.77	234.4	$31.90
4	24.125	0.23	5	12	111.60	9.30	34.25	3	11	1.21	19.82	13.84	$14.11	$18.56	11.29	245.7	$32.67
4	24.125	0.23	5	12	111.60	9.30	34.25	3	13	1.43	23.65	14.59	$14.88	$18.56	11.77	256.1	$33.44
4	24.125	0.23	5	12	111.60	9.30	34.25	4	5	1.00	14.53	13.04	$13.30	$18.56	10.58	230.1	$31.86
4	24.125	0.23	5	12	111.60	9.30	34.25	4	7	1.40	21.59	14.38	$14.66	$18.56	11.52	250.6	$33.22
4	24.125	0.23	5	12	111.60	9.30	34.25	4	9	1.80	28.47	15.71	$16.03	$18.56	12.33	268.3	$34.58
4	24.125	0.23	5	12	111.60	9.30	34.25	4	11	2.20	35.24	17.05	$17.39	$18.56	13.06	284.2	$35.95
4	24.125	0.23	5	12	111.60	9.30	34.25	4	13	2.60	41.82	18.38	$18.75	$18.56	13.72	298.5	$37.31
4	24.125	0.23	5	12	111.60	9.30	34.25	5	5	1.55	22.26	14.92	$15.21	$18.56	11.60	252.4	$33.77
4	24.125	0.23	5	12	111.60	9.30	34.25	5	7	2.17	32.88	17.00	$17.34	$18.56	12.81	278.8	$35.90
4	24.125	0.23	5	12	111.60	9.30	34.25	5	9	2.79	43.15	19.09	$19.47	$18.56	13.84	301.2	$38.03
4	24.125	0.23	5	12	111.60	9.30	34.25	5	11	3.41	53.00	21.17	$21.60	$18.56	14.74	320.8	$40.15
4	24.125	0.23	5	12	111.60	9.30	34.25	5	13	4.03	62.00	23.26	$23.72	$18.56	15.50	337.3	$42.28
4	24.125	0.23	5	12	111.60	9.30	34.25	6	5	2.20	31.21	17.21	$17.55	$18.56	12.63	274.9	$36.11
4	24.125	0.23	5	12	111.60	9.30	34.25	6	7	3.08	45.74	20.21	$20.62	$18.56	14.09	306.5	$39.18
4	24.125	0.23	5	12	111.60	9.30	34.25	6	9	3.96	59.18	23.22	$23.68	$18.56	15.27	332.2	$42.24
4	24.125	0.23	5	12	111.60	9.30	34.25	6	11	4.84	71.24	26.22	$26.75	$18.56	16.23	353.1	$45.30
4	24.125	0.23	5	12	111.60	9.30	34.25	6	13	5.72	82.91	29.23	$29.81	$18.56	17.09	372.0	$48.37
4	24.125	0.23	5	18	111.60	6.20	23.11	3	5	0.55	8.06	8.35	$8.51	$18.56	10.20	***149.7***	$27.07
4	24.125	0.23	5	18	111.60	6.20	23.11	3	7	0.77	12.03	9.10	$9.28	$18.56	11.03	***162.0***	$27.84
4	24.125	0.23	5	18	111.60	6.20	23.11	3	9	0.99	15.94	9.85	$10.05	$18.56	11.77	***172.7***	$28.61
4	24.125	0.23	5	18	111.60	6.20	23.11	3	11	1.21	19.82	10.60	$10.81	$18.56	12.43	***182.5***	$29.37
4	24.125	0.23	5	18	111.60	6.20	23.11	3	13	1.43	23.65	11.35	$11.58	$18.56	13.04	***191.4***	$30.14
4	24.125	0.23	5	18	111.60	6.20	23.11	4	5	1.00	14.53	9.81	$10.00	$18.56	11.51	***169.0***	$28.56
4	24.125	0.23	5	18	111.60	6.20	23.11	4	7	1.40	21.59	11.14	$11.37	$18.56	12.72	***186.7***	$29.92
4	24.125	0.23	5	18	111.60	6.20	23.11	4	9	1.80	28.47	12.48	$12.73	$18.56	13.75	***201.9***	$31.29
4	24.125	0.23	5	18	111.60	6.20	23.11	4	11	2.20	35.24	13.81	$14.09	$18.56	14.67	215.4	$32.65
4	24.125	0.23	5	18	111.60	6.20	23.11	4	13	2.60	41.82	15.15	$15.45	$18.56	15.50	227.6	$34.01
4	24.125	0.23	5	18	111.60	6.20	23.11	5	5	1.55	22.26	11.68	$11.92	$18.56	12.82	***188.3***	$30.47
4	24.125	0.23	5	18	111.60	6.20	23.11	5	7	2.17	32.88	13.77	$14.04	$18.56	14.36	***210.9***	$32.60
4	24.125	0.23	5	18	111.60	6.20	23.11	5	9	2.79	43.15	15.85	$16.17	$18.56	15.66	229.9	$34.73
4	24.125	0.23	5	18	111.60	6.20	23.11	5	11	3.41	53.00	17.94	$18.30	$18.56	16.78	246.3	$36.86
4	24.125	0.23	5	18	111.60	6.20	23.11	5	13	4.03	62.00	20.03	$20.43	$18.56	17.72	260.2	$38.98
4	24.125	0.23	5	18	111.60	6.20	23.11	6	5	2.20	31.21	13.98	$14.26	$18.56	14.13	***207.5***	$32.81
4	24.125	0.23	5	18	111.60	6.20	23.11	6	7	3.08	45.74	16.98	$17.32	$18.56	15.96	234.4	$35.88
4	24.125	0.23	5	18	111.60	6.20	23.11	6	9	3.96	59.18	19.98	$20.38	$18.56	17.43	256.0	$38.94
4	24.125	0.23	5	18	111.60	6.20	23.11	6	11	4.84	71.24	22.99	$23.45	$18.56	18.63	273.5	$42.01
4	24.125	0.23	5	18	111.60	6.20	23.11	6	13	5.72	82.91	25.99	$26.51	$18.56	19.70	289.2	$45.07

White Text - inadequate temperature and shrinkage steel
Italic Text - inadequate structural capacity
Highlighted Row - good design – valid for use

1 in. = 25.4 mm
1 ft = 0.3048 m
1 kip = 4.448 kN

Table A-1 (continued). Interior Section Strength and Cost Calculations for All Configurations

Top Width (in)	Base Width (in)	Concrete Volume (yd^3 / ft)	Stirrups					Longitudinal Steel				Weight of Steel (lb / ft)	Cost of Steel ($ / ft)	Cost of Concrete ($ / ft)	Yield Line Calculations		Total Cost ($ / ft)
			Bar #	Spacing (in)	Length (in)	Length / ft (ft / ft)	M_C (k-ft / ft)	Bar #	Quantity	A_s (in^2)	M_w (k-ft / ft)				L_{CR} (ft)	ΦR_w (kips)	
4	24.125	0.23	5	24	111.60	4.65	17.46	3	5	0.55	8.06	6.73	$6.86	$18.56	10.76	***119.3***	$25.42
4	24.125	0.23	5	24	111.60	4.65	17.46	3	7	0.77	12.03	7.48	$7.63	$18.56	11.76	***130.5***	$26.19
4	24.125	0.23	5	24	111.60	4.65	17.46	3	9	0.99	15.94	8.23	$8.40	$18.56	12.64	***140.2***	$26.96
4	24.125	0.23	5	24	111.60	4.65	17.46	3	11	1.21	19.82	8.99	$9.17	$18.56	13.43	***149.0***	$27.72
4	24.125	0.23	5	24	111.60	4.65	17.46	3	13	1.43	23.65	9.74	$9.93	$18.56	14.15	***156.9***	$28.49
4	24.125	0.23	5	24	111.60	4.65	17.46	4	5	1.00	14.53	8.19	$8.35	$18.56	12.33	***136.8***	$26.91
4	24.125	0.23	5	24	111.60	4.65	17.46	4	7	1.40	21.59	9.53	$9.72	$18.56	13.77	***152.7***	$28.27
4	24.125	0.23	5	24	111.60	4.65	17.46	4	9	1.80	28.47	10.86	$11.08	$18.56	14.99	***166.2***	$29.64
4	24.125	0.23	5	24	111.60	4.65	17.46	4	11	2.20	35.24	12.20	$12.44	$18.56	16.07	***178.2***	$31.00
4	24.125	0.23	5	24	111.60	4.65	17.46	4	13	2.60	41.82	13.53	$13.80	$18.56	17.03	***188.9***	$32.36
4	24.125	0.23	5	24	111.60	4.65	17.46	5	5	1.55	22.26	10.07	$10.27	$18.56	13.89	***154.1***	$28.82
4	24.125	0.23	5	24	111.60	4.65	17.46	5	7	2.17	32.88	12.15	$12.39	$18.56	15.70	***174.2***	$30.95
4	24.125	0.23	5	24	111.60	4.65	17.46	5	9	2.79	43.15	14.24	$14.52	$18.56	17.22	***191.0***	$33.08
4	24.125	0.23	5	24	111.60	4.65	17.46	5	11	3.41	53.00	16.32	$16.65	$18.56	18.52	***205.5***	$35.21
4	24.125	0.23	5	24	111.60	4.65	17.46	5	13	4.03	62.00	18.41	$18.78	$18.56	19.62	217.6	$37.34
4	24.125	0.23	5	24	111.60	4.65	17.46	6	5	2.20	31.21	12.36	$12.61	$18.56	15.44	***171.2***	$31.17
4	24.125	0.23	5	24	111.60	4.65	17.46	6	7	3.08	45.74	15.36	$15.67	$18.56	17.57	***194.9***	$34.23
4	24.125	0.23	5	24	111.60	4.65	17.46	6	9	3.96	59.18	18.37	$18.74	$18.56	19.29	***213.9***	$37.29
4	24.125	0.23	5	24	111.60	4.65	17.46	6	11	4.84	71.24	21.37	$21.80	$18.56	20.67	229.3	$40.36
4	24.125	0.23	5	24	111.60	4.65	17.46	6	13	5.72	82.91	24.38	$24.86	$18.56	21.92	243.1	$43.42
4	24.125	0.23	5	30	111.60	3.72	14.03	3	5	0.55	8.06	5.76	$5.88	$18.56	11.27	***100.5***	$24.43
4	24.125	0.23	5	30	111.60	3.72	14.03	3	7	0.77	12.03	6.51	$6.64	$18.56	12.43	***110.8***	$25.20
4	24.125	0.23	5	30	111.60	3.72	14.03	3	9	0.99	15.94	7.26	$7.41	$18.56	13.43	***119.7***	$25.97
4	24.125	0.23	5	30	111.60	3.72	14.03	3	11	1.21	19.82	8.02	$8.18	$18.56	14.33	***127.8***	$26.73
4	24.125	0.23	5	30	111.60	3.72	14.03	3	13	1.43	23.65	8.77	$8.94	$18.56	15.15	***135.0***	$27.50
4	24.125	0.23	5	30	111.60	3.72	14.03	4	5	1.00	14.53	7.22	$7.36	$18.56	13.08	***116.6***	$25.92
4	24.125	0.23	5	30	111.60	3.72	14.03	4	7	1.40	21.59	8.56	$8.73	$18.56	14.71	***131.2***	$27.29
4	24.125	0.23	5	30	111.60	3.72	14.03	4	9	1.80	28.47	9.89	$10.09	$18.56	16.10	***143.5***	$28.65
4	24.125	0.23	5	30	111.60	3.72	14.03	4	11	2.20	35.24	11.23	$11.45	$18.56	17.31	***154.4***	$30.01
4	24.125	0.23	5	30	111.60	3.72	14.03	4	13	2.60	41.82	12.56	$12.82	$18.56	18.40	***164.1***	$31.37
4	24.125	0.23	5	30	111.60	3.72	14.03	5	5	1.55	22.26	9.10	$9.28	$18.56	14.86	***132.5***	$27.84
4	24.125	0.23	5	30	111.60	3.72	14.03	5	7	2.17	32.88	11.18	$11.40	$18.56	16.90	***150.7***	$29.96
4	24.125	0.23	5	30	111.60	3.72	14.03	5	9	2.79	43.15	13.27	$13.53	$18.56	18.61	***165.9***	$32.09
4	24.125	0.23	5	30	111.60	3.72	14.03	5	11	3.41	53.00	15.35	$15.66	$18.56	20.08	***179.0***	$34.22
4	24.125	0.23	5	30	111.60	3.72	14.03	5	13	4.03	62.00	17.44	$17.79	$18.56	21.31	***190.0***	$36.35
4	24.125	0.23	5	30	111.60	3.72	14.03	6	5	2.20	31.21	11.39	$11.62	$18.56	16.60	***148.0***	$30.18
4	24.125	0.23	5	30	111.60	3.72	14.03	6	7	3.08	45.74	14.39	$14.68	$18.56	19.01	***169.5***	$33.24
4	24.125	0.23	5	30	111.60	3.72	14.03	6	9	3.96	59.18	17.40	$17.75	$18.56	20.94	***186.6***	$36.30
4	24.125	0.23	5	30	111.60	3.72	14.03	6	11	4.84	71.24	20.40	$20.81	$18.56	22.49	***200.5***	$39.37
4	24.125	0.23	5	30	111.60	3.72	14.03	6	13	5.72	82.91	23.41	$23.87	$18.56	23.89	***212.9***	$42.43

White Text - inadequate temperature and shrinkage steel
Italic Text - inadequate structural capacity
Highlighted Row - good design – valid for use

1 in. = 25.4 mm
1 ft = 0.3048 m
1 kip = 4.448 kN

Table A-1 (continued). Interior Section Strength and Cost Calculations for All Configurations

Top Width (in)	Base Width (in)	Concrete Volume (yd^3 / ft)	Stirrups					Longitudinal Steel				Weight of Steel (lb / ft)	Cost of Steel ($ / ft)	Cost of Concrete ($ / ft)	Yield Line Calculations		Total Cost ($ / ft)
			Bar #	Spacing (in)	Length (in)	Length / ft (ft / ft)	M_C (k-ft / ft)	Bar #	Quantity	A_s (in^2)	M_w (k-ft / ft)				L_{CR} (ft)	ΦR_w (kips)	
4	24.125	0.23	5	36	111.60	3.10	11.72	3	5	0.55	8.06	5.11	$5.22	$18.56	11.76	***87.5***	$23.77
4	24.125	0.23	5	36	111.60	3.10	11.72	3	7	0.77	12.03	5.87	$5.98	$18.56	13.05	***97.2***	$24.54
4	24.125	0.23	5	36	111.60	3.10	11.72	3	9	0.99	15.94	6.62	$6.75	$18.56	14.17	***105.5***	$25.31
4	24.125	0.23	5	36	111.60	3.10	11.72	3	11	1.21	19.82	7.37	$7.52	$18.56	15.16	***112.9***	$26.07
4	24.125	0.23	5	36	111.60	3.10	11.72	3	13	1.43	23.65	8.12	$8.28	$18.56	16.06	***119.6***	$26.84
4	24.125	0.23	5	36	111.60	3.10	11.72	4	5	1.00	14.53	6.57	$6.70	$18.56	13.78	***102.6***	$25.26
4	24.125	0.23	5	36	111.60	3.10	11.72	4	7	1.40	21.59	7.91	$8.07	$18.56	15.59	***116.1***	$26.63
4	24.125	0.23	5	36	111.60	3.10	11.72	4	9	1.80	28.47	9.25	$9.43	$18.56	17.11	***127.5***	$27.99
4	24.125	0.23	5	36	111.60	3.10	11.72	4	11	2.20	35.24	10.58	$10.79	$18.56	18.46	***137.5***	$29.35
4	24.125	0.23	5	36	111.60	3.10	11.72	4	13	2.60	41.82	11.92	$12.16	$18.56	19.66	***146.4***	$30.71
4	24.125	0.23	5	36	111.60	3.10	11.72	5	5	1.55	22.26	8.45	$8.62	$18.56	15.75	***117.3***	$27.18
4	24.125	0.23	5	36	111.60	3.10	11.72	5	7	2.17	32.88	10.53	$10.75	$18.56	18.01	***134.1***	$29.30
4	24.125	0.23	5	36	111.60	3.10	11.72	5	9	2.79	43.15	12.62	$12.87	$18.56	19.89	***148.1***	$31.43
4	24.125	0.23	5	36	111.60	3.10	11.72	5	11	3.41	53.00	14.71	$15.00	$18.56	21.50	***160.1***	$33.56
4	24.125	0.23	5	36	111.60	3.10	11.72	5	13	4.03	62.00	16.79	$17.13	$18.56	22.86	***170.2***	$35.69
4	24.125	0.23	5	36	111.60	3.10	11.72	6	5	2.20	31.21	10.74	$10.96	$18.56	17.67	***131.6***	$29.52
4	24.125	0.23	5	36	111.60	3.10	11.72	6	7	3.08	45.74	13.75	$14.02	$18.56	20.33	***151.4***	$32.58
4	24.125	0.23	5	36	111.60	3.10	11.72	6	9	3.96	59.18	16.75	$17.09	$18.56	22.44	***167.1***	$35.64
4	24.125	0.23	5	36	111.60	3.10	11.72	6	11	4.84	71.24	19.76	$20.15	$18.56	24.16	***179.9***	$38.71
4	24.125	0.23	5	36	111.60	3.10	11.72	6	13	5.72	82.91	22.76	$23.21	$18.56	25.69	***191.3***	$41.77
4	24.125	0.23	6	12	122.74	10.23	47.75	3	5	0.55	8.06	17.24	$17.59	$18.56	9.18	278.5	$36.15
4	24.125	0.23	6	12	122.74	10.23	47.75	3	7	0.77	12.03	17.99	$18.35	$18.56	9.67	293.4	$36.91
4	24.125	0.23	6	12	122.74	10.23	47.75	3	9	0.99	15.94	18.75	$19.12	$18.56	10.12	307.0	$37.68
4	24.125	0.23	6	12	122.74	10.23	47.75	3	11	1.21	19.82	19.50	$19.89	$18.56	10.53	319.5	$38.45
4	24.125	0.23	6	12	122.74	10.23	47.75	3	13	1.43	23.65	20.25	$20.66	$18.56	10.91	331.1	$39.21
4	24.125	0.23	6	12	122.74	10.23	47.75	4	5	1.00	14.53	18.70	$19.08	$18.56	9.96	302.2	$37.64
4	24.125	0.23	6	12	122.74	10.23	47.75	4	7	1.40	21.59	20.04	$20.44	$18.56	10.71	324.9	$39.00
4	24.125	0.23	6	12	122.74	10.23	47.75	4	9	1.80	28.47	21.37	$21.80	$18.56	11.37	344.9	$40.36
4	24.125	0.23	6	12	122.74	10.23	47.75	4	11	2.20	35.24	22.71	$23.17	$18.56	11.96	362.9	$41.72
4	24.125	0.23	6	12	122.74	10.23	47.75	4	13	2.60	41.82	24.05	$24.53	$18.56	12.50	379.2	$43.09
4	24.125	0.23	6	12	122.74	10.23	47.75	5	5	1.55	22.26	20.58	$20.99	$18.56	10.78	327.0	$39.55
4	24.125	0.23	6	12	122.74	10.23	47.75	5	7	2.17	32.88	22.66	$23.12	$18.56	11.76	356.8	$41.68
4	24.125	0.23	6	12	122.74	10.23	47.75	5	9	2.79	43.15	24.75	$25.24	$18.56	12.60	382.4	$43.80
4	24.125	0.23	6	12	122.74	10.23	47.75	5	11	3.41	53.00	26.84	$27.37	$18.56	13.34	404.8	$45.93
4	24.125	0.23	6	12	122.74	10.23	47.75	5	13	4.03	62.00	28.92	$29.50	$18.56	13.97	423.8	$48.06
4	24.125	0.23	6	12	122.74	10.23	47.75	6	5	2.20	31.21	22.87	$23.33	$18.56	11.61	352.3	$41.89
4	24.125	0.23	6	12	122.74	10.23	47.75	6	7	3.08	45.74	25.88	$26.39	$18.56	12.80	388.4	$44.95
4	24.125	0.23	6	12	122.74	10.23	47.75	6	9	3.96	59.18	28.88	$29.46	$18.56	13.78	417.9	$48.02
4	24.125	0.23	6	12	122.74	10.23	47.75	6	11	4.84	71.24	31.88	$32.52	$18.56	14.57	442.1	$51.08
4	24.125	0.23	6	12	122.74	10.23	47.75	6	13	5.72	82.91	34.89	$35.59	$18.56	15.29	463.9	$54.15

White Text - inadequate temperature and shrinkage steel
Italic Text - inadequate structural capacity
Highlighted Row - good design – valid for use

1 in. = 25.4 mm
1 ft = 0.3048 m
1 kip = 4.448 kN

Table A-1 (continued). Interior Section Strength and Cost Calculations for All Configurations

Top Width (in)	Base Width (in)	Concrete Volume (yd^3 / ft)	Stirrups					Longitudinal Steel				Weight of Steel (lb / ft)	Cost of Steel ($ / ft)	Cost of Concrete ($ / ft)	Yield Line Calculations		Total Cost ($ / ft)
			Bar #	Spacing (in)	Length (in)	Length / ft (ft / ft)	M_C (k-ft / ft)	Bar #	Quantity	A_s (in^2)	M_w (k-ft / ft)				L_{CR} (ft)	ΦR_w (kips)	
4	24.125	0.23	6	18	122.74	6.82	32.44	3	5	0.55	8.06	12.12	$12.36	$18.56	9.65	***199.0***	$30.92
4	24.125	0.23	6	18	122.74	6.82	32.44	3	7	0.77	12.03	12.87	$13.13	$18.56	10.31	***212.5***	$31.69
4	24.125	0.23	6	18	122.74	6.82	32.44	3	9	0.99	15.94	13.63	$13.90	$18.56	10.90	224.6	$32.46
4	24.125	0.23	6	18	122.74	6.82	32.44	3	11	1.21	19.82	14.38	$14.67	$18.56	11.43	235.6	$33.22
4	24.125	0.23	6	18	122.74	6.82	32.44	3	13	1.43	23.65	15.13	$15.43	$18.56	11.93	245.8	$33.99
4	24.125	0.23	6	18	122.74	6.82	32.44	4	5	1.00	14.53	13.58	$13.85	$18.56	10.69	220.3	$32.41
4	24.125	0.23	6	18	122.74	6.82	32.44	4	7	1.40	21.59	14.92	$15.22	$18.56	11.66	240.4	$33.77
4	24.125	0.23	6	18	122.74	6.82	32.44	4	9	1.80	28.47	16.25	$16.58	$18.56	12.51	257.8	$35.14
4	24.125	0.23	6	18	122.74	6.82	32.44	4	11	2.20	35.24	17.59	$17.94	$18.56	13.26	273.3	$36.50
4	24.125	0.23	6	18	122.74	6.82	32.44	4	13	2.60	41.82	18.93	$19.30	$18.56	13.94	287.3	$37.86
4	24.125	0.23	6	18	122.74	6.82	32.44	5	5	1.55	22.26	15.46	$15.77	$18.56	11.75	242.2	$34.32
4	24.125	0.23	6	18	122.74	6.82	32.44	5	7	2.17	32.88	17.54	$17.89	$18.56	13.00	268.1	$36.45
4	24.125	0.23	6	18	122.74	6.82	32.44	5	9	2.79	43.15	19.63	$20.02	$18.56	14.07	290.0	$38.58
4	24.125	0.23	6	18	122.74	6.82	32.44	5	11	3.41	53.00	21.71	$22.15	$18.56	15.00	309.1	$40.71
4	24.125	0.23	6	18	122.74	6.82	32.44	5	13	4.03	62.00	23.80	$24.28	$18.56	15.78	325.2	$42.84
4	24.125	0.23	6	18	122.74	6.82	32.44	6	5	2.20	31.21	17.75	$18.11	$18.56	12.82	264.2	$36.67
4	24.125	0.23	6	18	122.74	6.82	32.44	6	7	3.08	45.74	20.76	$21.17	$18.56	14.32	295.2	$39.73
4	24.125	0.23	6	18	122.74	6.82	32.44	6	9	3.96	59.18	23.76	$24.24	$18.56	15.54	320.3	$42.79
4	24.125	0.23	6	18	122.74	6.82	32.44	6	11	4.84	71.24	26.76	$27.30	$18.56	16.53	340.7	$45.86
4	24.125	0.23	6	18	122.74	6.82	32.44	6	13	5.72	82.91	29.77	$30.36	$18.56	17.42	359.1	$48.92
4	24.125	0.23	6	24	122.74	5.11	24.58	3	5	0.55	8.06	9.56	$9.75	$18.56	10.09	***157.5***	$28.31
4	24.125	0.23	6	24	122.74	5.11	24.58	3	7	0.77	12.03	10.31	$10.52	$18.56	10.89	***170.0***	$29.08
4	24.125	0.23	6	24	122.74	5.11	24.58	3	9	0.99	15.94	11.07	$11.29	$18.56	11.59	***181.0***	$29.85
4	24.125	0.23	6	24	122.74	5.11	24.58	3	11	1.21	19.82	11.82	$12.05	$18.56	12.23	***191.1***	$30.61
4	24.125	0.23	6	24	122.74	5.11	24.58	3	13	1.43	23.65	12.57	$12.82	$18.56	12.82	***200.2***	$31.38
4	24.125	0.23	6	24	122.74	5.11	24.58	4	5	1.00	14.53	11.02	$11.24	$18.56	11.35	***177.2***	$29.80
4	24.125	0.23	6	24	122.74	5.11	24.58	4	7	1.40	21.59	12.36	$12.60	$18.56	12.51	***195.4***	$31.16
4	24.125	0.23	6	24	122.74	5.11	24.58	4	9	1.80	28.47	13.69	$13.97	$18.56	13.51	***210.9***	$32.53
4	24.125	0.23	6	24	122.74	5.11	24.58	4	11	2.20	35.24	15.03	$15.33	$18.56	14.39	224.8	$33.89
4	24.125	0.23	6	24	122.74	5.11	24.58	4	13	2.60	41.82	16.37	$16.69	$18.56	15.19	237.3	$35.25
4	24.125	0.23	6	24	122.74	5.11	24.58	5	5	1.55	22.26	12.90	$13.15	$18.56	12.61	***197.0***	$31.71
4	24.125	0.23	6	24	122.74	5.11	24.58	5	7	2.17	32.88	14.98	$15.28	$18.56	14.09	220.1	$33.84
4	24.125	0.23	6	24	122.74	5.11	24.58	5	9	2.79	43.15	17.07	$17.41	$18.56	15.35	239.7	$35.97
4	24.125	0.23	6	24	122.74	5.11	24.58	5	11	3.41	53.00	19.15	$19.54	$18.56	16.43	256.6	$38.10
4	24.125	0.23	6	24	122.74	5.11	24.58	5	13	4.03	62.00	21.24	$21.67	$18.56	17.34	270.8	$40.22
4	24.125	0.23	6	24	122.74	5.11	24.58	6	5	2.20	31.21	15.19	$15.50	$18.56	13.88	216.7	$34.05
4	24.125	0.23	6	24	122.74	5.11	24.58	6	7	3.08	45.74	18.20	$18.56	$18.56	15.64	244.3	$37.12
4	24.125	0.23	6	24	122.74	5.11	24.58	6	9	3.96	59.18	21.20	$21.62	$18.56	17.06	266.5	$40.18
4	24.125	0.23	6	24	122.74	5.11	24.58	6	11	4.84	71.24	24.20	$24.69	$18.56	18.22	284.5	$43.25
4	24.125	0.23	6	24	122.74	5.11	24.58	6	13	5.72	82.91	27.21	$27.75	$18.56	19.25	300.7	$46.31

White Text - inadequate temperature and shrinkage steel
Italic Text - inadequate structural capacity
Highlighted Row - good design – valid for use

1 in. = 25.4 mm
1 ft = 0.3048 m
1 kip = 4.448 kN

Table A-1 (continued). Interior Section Strength and Cost Calculations for All Configurations

Top Width (in)	Base Width (in)	Concrete Volume (yd^3 / ft)	Stirrups					Longitudinal Steel				Weight of Steel (lb / ft)	Cost of Steel ($ / ft)	Cost of Concrete ($ / ft)	Yield Line Calculations		Total Cost ($ / ft)
			Bar #	Spacing (in)	Length (in)	Length / ft (ft / ft)	M_C (k-ft / ft)	Bar #	Quantity	A_s (in^2)	M_w (k-ft / ft)				L_{CR} (ft)	ΦR_w (kips)	
4	24.125	0.23	6	30	122.74	4.09	19.80	3	5	0.55	8.06	8.03	$8.19	$18.56	10.49	***132.0***	$26.74
4	24.125	0.23	6	30	122.74	4.09	19.80	3	7	0.77	12.03	8.78	$8.95	$18.56	11.42	***143.6***	$27.51
4	24.125	0.23	6	30	122.74	4.09	19.80	3	9	0.99	15.94	9.53	$9.72	$18.56	12.23	***153.8***	$28.28
4	24.125	0.23	6	30	122.74	4.09	19.80	3	11	1.21	19.82	10.28	$10.49	$18.56	12.96	***163.0***	$29.05
4	24.125	0.23	6	30	122.74	4.09	19.80	3	13	1.43	23.65	11.03	$11.25	$18.56	13.63	***171.4***	$29.81
4	24.125	0.23	6	30	122.74	4.09	19.80	4	5	1.00	14.53	9.49	$9.67	$18.56	11.95	***150.3***	$28.23
4	24.125	0.23	6	30	122.74	4.09	19.80	4	7	1.40	21.59	10.82	$11.04	$18.56	13.27	***167.0***	$29.60
4	24.125	0.23	6	30	122.74	4.09	19.80	4	9	1.80	28.47	12.16	$12.40	$18.56	14.41	***181.2***	$30.96
4	24.125	0.23	6	30	122.74	4.09	19.80	4	11	2.20	35.24	13.49	$13.76	$18.56	15.41	***193.9***	$32.32
4	24.125	0.23	6	30	122.74	4.09	19.80	4	13	2.60	41.82	14.83	$15.13	$18.56	16.31	***205.2***	$33.68
4	24.125	0.23	6	30	122.74	4.09	19.80	5	5	1.55	22.26	11.36	$11.59	$18.56	13.39	***168.5***	$30.15
4	24.125	0.23	6	30	122.74	4.09	19.80	5	7	2.17	32.88	13.45	$13.72	$18.56	15.07	***189.6***	$32.27
4	24.125	0.23	6	30	122.74	4.09	19.80	5	9	2.79	43.15	15.53	$15.84	$18.56	16.49	***207.4***	$34.40
4	24.125	0.23	6	30	122.74	4.09	19.80	5	11	3.41	53.00	17.62	$17.97	$18.56	17.71	222.7	$36.53
4	24.125	0.23	6	30	122.74	4.09	19.80	5	13	4.03	62.00	19.70	$20.10	$18.56	18.73	235.7	$38.66
4	24.125	0.23	6	30	122.74	4.09	19.80	6	5	2.20	31.21	13.66	$13.93	$18.56	14.83	***186.5***	$32.49
4	24.125	0.23	6	30	122.74	4.09	19.80	6	7	3.08	45.74	16.66	$16.99	$18.56	16.82	***211.6***	$35.55
4	24.125	0.23	6	30	122.74	4.09	19.80	6	9	3.96	59.18	19.66	$20.06	$18.56	18.42	231.7	$38.61
4	24.125	0.23	6	30	122.74	4.09	19.80	6	11	4.84	71.24	22.67	$23.12	$18.56	19.72	248.0	$41.68
4	24.125	0.23	6	30	122.74	4.09	19.80	6	13	5.72	82.91	25.67	$26.18	$18.56	20.88	262.6	$44.74
4	24.125	0.23	6	36	122.74	3.41	16.56	3	5	0.55	8.06	7.00	$7.14	$18.56	10.87	***114.4***	$25.70
4	24.125	0.23	6	36	122.74	3.41	16.56	3	7	0.77	12.03	7.75	$7.91	$18.56	11.92	***125.3***	$26.47
4	24.125	0.23	6	36	122.74	3.41	16.56	3	9	0.99	15.94	8.50	$8.68	$18.56	12.82	***134.9***	$27.23
4	24.125	0.23	6	36	122.74	3.41	16.56	3	11	1.21	19.82	9.26	$9.44	$18.56	13.64	***143.4***	$28.00
4	24.125	0.23	6	36	122.74	3.41	16.56	3	13	1.43	23.65	10.01	$10.21	$18.56	14.38	***151.2***	$28.77
4	24.125	0.23	6	36	122.74	3.41	16.56	4	5	1.00	14.53	8.46	$8.63	$18.56	12.51	***131.5***	$27.19
4	24.125	0.23	6	36	122.74	3.41	16.56	4	7	1.40	21.59	9.80	$9.99	$18.56	13.99	***147.1***	$28.55
4	24.125	0.23	6	36	122.74	3.41	16.56	4	9	1.80	28.47	11.13	$11.36	$18.56	15.24	***160.3***	$29.91
4	24.125	0.23	6	36	122.74	3.41	16.56	4	11	2.20	35.24	12.47	$12.72	$18.56	16.36	***172.0***	$31.28
4	24.125	0.23	6	36	122.74	3.41	16.56	4	13	2.60	41.82	13.80	$14.08	$18.56	17.35	***182.5***	$32.64
4	24.125	0.23	6	36	122.74	3.41	16.56	5	5	1.55	22.26	10.34	$10.54	$18.56	14.12	***148.5***	$29.10
4	24.125	0.23	6	36	122.74	3.41	16.56	5	7	2.17	32.88	12.42	$12.67	$18.56	15.98	***168.1***	$31.23
4	24.125	0.23	6	36	122.74	3.41	16.56	5	9	2.79	43.15	14.51	$14.80	$18.56	17.54	***184.5***	$33.36
4	24.125	0.23	6	36	122.74	3.41	16.56	5	11	3.41	53.00	16.59	$16.93	$18.56	18.89	***198.6***	$35.48
4	24.125	0.23	6	36	122.74	3.41	16.56	5	13	4.03	62.00	18.68	$19.05	$18.56	20.02	***210.5***	$37.61
4	24.125	0.23	6	36	122.74	3.41	16.56	6	5	2.20	31.21	12.63	$12.88	$18.56	15.71	***165.2***	$31.44
4	24.125	0.23	6	36	122.74	3.41	16.56	6	7	3.08	45.74	15.63	$15.95	$18.56	17.91	***188.3***	$34.51
4	24.125	0.23	6	36	122.74	3.41	16.56	6	9	3.96	59.18	18.64	$19.01	$18.56	19.67	***206.9***	$37.57
4	24.125	0.23	6	36	122.74	3.41	16.56	6	11	4.84	71.24	21.64	$22.08	$18.56	21.10	221.9	$40.63
4	24.125	0.23	6	36	122.74	3.41	16.56	6	13	5.72	82.91	24.65	$25.14	$18.56	22.37	235.3	$43.70

White Text - inadequate temperature and shrinkage steel
Italic Text - inadequate structural capacity
Highlighted Row - good design – valid for use

1 in. = 25.4 mm
1 ft = 0.3048 m
1 kip = 4.448 kN

Table A-1 (continued). Interior Section Strength and Cost Calculations for All Configurations

Top Width (in)	Base Width (in)	Concrete Volume (yd^3 / ft)	Stirrups					Longitudinal Steel				Weight of Steel (lb / ft)	Cost of Steel ($ / ft)	Cost of Concrete ($ / ft)	Yield Line Calculations		Total Cost ($ / ft)
			Bar #	Spacing (in)	Length (in)	Length / ft (ft / ft)	M_C (k-ft / ft)	Bar #	Quantity	A_s (in^2)	M_w (k-ft / ft)				L_{CR} (ft)	ΦR_w (kips)	
5	25.125	0.24	3	12	112.34	9.36	13.00	3	5	0.55	8.44	5.40	$5.51	$19.50	11.60	***95.8***	$25.01
5	25.125	0.24	3	12	112.34	9.36	13.00	3	7	0.77	12.62	6.15	$6.27	$19.50	12.85	***106.1***	$25.77
5	25.125	0.24	3	12	112.34	9.36	13.00	3	9	0.99	16.74	6.90	$7.04	$19.50	13.93	***115.1***	$26.54
5	25.125	0.24	3	12	112.34	9.36	13.00	3	11	1.21	20.79	7.66	$7.81	$19.50	14.90	***123.0***	$27.31
5	25.125	0.24	3	12	112.34	9.36	13.00	3	13	1.43	24.82	8.41	$8.58	$19.50	15.77	***130.3***	$28.07
5	25.125	0.24	3	12	112.34	9.36	13.00	4	5	1.00	15.24	6.86	$7.00	$19.50	13.55	***111.9***	$26.50
5	25.125	0.24	3	12	112.34	9.36	13.00	4	7	1.40	22.65	8.20	$8.36	$19.50	15.31	***126.4***	$27.86
5	25.125	0.24	3	12	112.34	9.36	13.00	4	9	1.80	29.88	9.53	$9.72	$19.50	16.79	***138.7***	$29.22
5	25.125	0.24	3	12	112.34	9.36	13.00	4	11	2.20	37.00	10.87	$11.09	$19.50	18.10	***149.5***	$30.58
5	25.125	0.24	3	12	112.34	9.36	13.00	4	13	2.60	43.94	12.20	$12.45	$19.50	19.27	***159.1***	$31.95
5	25.125	0.24	3	12	112.34	9.36	13.00	5	5	1.55	23.35	8.73	$8.91	$19.50	15.46	***127.7***	$28.41
5	25.125	0.24	3	12	112.34	9.36	13.00	5	7	2.17	34.53	10.82	$11.04	$19.50	17.66	***145.8***	$30.54
5	25.125	0.24	3	12	112.34	9.36	13.00	5	9	2.79	45.32	12.91	$13.16	$19.50	19.49	***161.0***	$32.66
5	25.125	0.24	3	12	112.34	9.36	13.00	5	11	3.41	55.74	14.99	$15.29	$19.50	21.07	***174.0***	$34.79
5	25.125	0.24	3	12	112.34	9.36	13.00	5	13	4.03	65.26	17.08	$17.42	$19.50	22.40	***185.0***	$36.92
5	25.125	0.24	3	12	112.34	9.36	13.00	6	5	2.20	32.74	11.03	$11.25	$19.50	17.33	***143.1***	$30.75
5	25.125	0.24	3	12	112.34	9.36	13.00	6	7	3.08	48.06	14.03	$14.31	$19.50	19.92	***164.5***	$33.81
5	25.125	0.24	3	12	112.34	9.36	13.00	6	9	3.96	62.29	17.04	$17.38	$19.50	21.99	***181.6***	$36.88
5	25.125	0.24	3	12	112.34	9.36	13.00	6	11	4.84	75.12	20.04	$20.44	$19.50	23.67	***195.5***	$39.94
5	25.125	0.24	3	12	112.34	9.36	13.00	6	13	5.72	87.59	23.05	$23.51	$19.50	25.18	***208.0***	$43.01
5	25.125	0.24	3	18	112.34	6.24	8.72	3	5	0.55	8.44	4.23	$4.31	$19.50	12.84	***71.2***	$23.81
5	25.125	0.24	3	18	112.34	6.24	8.72	3	7	0.77	12.62	4.98	$5.08	$19.50	14.44	***80.0***	$24.58
5	25.125	0.24	3	18	112.34	6.24	8.72	3	9	0.99	16.74	5.73	$5.85	$19.50	15.80	***87.5***	$25.34
5	25.125	0.24	3	18	112.34	6.24	8.72	3	11	1.21	20.79	6.48	$6.61	$19.50	17.00	***94.2***	$26.11
5	25.125	0.24	3	18	112.34	6.24	8.72	3	13	1.43	24.82	7.23	$7.38	$19.50	18.10	***100.3***	$26.88
5	25.125	0.24	3	18	112.34	6.24	8.72	4	5	1.00	15.24	5.69	$5.80	$19.50	15.32	***84.9***	$25.30
5	25.125	0.24	3	18	112.34	6.24	8.72	4	7	1.40	22.65	7.02	$7.16	$19.50	17.52	***97.1***	$26.66
5	25.125	0.24	3	18	112.34	6.24	8.72	4	9	1.80	29.88	8.36	$8.53	$19.50	19.36	***107.3***	$28.02
5	25.125	0.24	3	18	112.34	6.24	8.72	4	11	2.20	37.00	9.69	$9.89	$19.50	20.98	***116.3***	$29.39
5	25.125	0.24	3	18	112.34	6.24	8.72	4	13	2.60	43.94	11.03	$11.25	$19.50	22.43	***124.3***	$30.75
5	25.125	0.24	3	18	112.34	6.24	8.72	5	5	1.55	23.35	7.56	$7.71	$19.50	17.71	***98.1***	$27.21
5	25.125	0.24	3	18	112.34	6.24	8.72	5	7	2.17	34.53	9.65	$9.84	$19.50	20.44	***113.3***	$29.34
5	25.125	0.24	3	18	112.34	6.24	8.72	5	9	2.79	45.32	11.73	$11.97	$19.50	22.70	***125.8***	$31.47
5	25.125	0.24	3	18	112.34	6.24	8.72	5	11	3.41	55.74	13.82	$14.10	$19.50	24.65	***136.6***	$33.59
5	25.125	0.24	3	18	112.34	6.24	8.72	5	13	4.03	65.26	15.91	$16.22	$19.50	26.28	***145.6***	$35.72
5	25.125	0.24	3	18	112.34	6.24	8.72	6	5	2.20	32.74	9.86	$10.05	$19.50	20.03	***111.0***	$29.55
5	25.125	0.24	3	18	112.34	6.24	8.72	6	7	3.08	48.06	12.86	$13.12	$19.50	23.23	***128.7***	$32.62
5	25.125	0.24	3	18	112.34	6.24	8.72	6	9	3.96	62.29	15.86	$16.18	$19.50	25.79	***142.9***	$35.68
5	25.125	0.24	3	18	112.34	6.24	8.72	6	11	4.84	75.12	18.87	$19.25	$19.50	27.86	***154.4***	$38.74
5	25.125	0.24	3	18	112.34	6.24	8.72	6	13	5.72	87.59	21.87	$22.31	$19.50	29.71	***164.6***	$41.81

White Text - inadequate temperature and shrinkage steel
Italic Text - inadequate structural capacity
Highlighted Row - good design – valid for use

1 in. = 25.4 mm
1 ft = 0.3048 m
1 kip = 4.448 kN

Table A-1 (continued). Interior Section Strength and Cost Calculations for All Configurations

Top Width (in)	Base Width (in)	Concrete Volume (yd^3 / ft)	Stirrups					Longitudinal Steel				Weight of Steel (lb / ft)	Cost of Steel ($ / ft)	Cost of Concrete ($ / ft)	Yield Line Calculations		Total Cost ($ / ft)
			Bar #	Spacing (in)	Length (in)	Length / ft (ft / ft)	M_C (k-ft / ft)	Bar #	Quantity	A_s (in^2)	M_w (k-ft / ft)				L_{CR} (ft)	ΦR_w (kips)	
5	25.125	0.24	3	24	112.34	4.68	6.54	3	5	0.55	8.44	3.64	$3.71	$19.50	13.94	***57.9***	$23.21
5	25.125	0.24	3	24	112.34	4.68	6.54	3	7	0.77	12.62	4.39	$4.48	$19.50	15.83	***65.8***	$23.98
5	25.125	0.24	3	24	112.34	4.68	6.54	3	9	0.99	16.74	5.14	$5.25	$19.50	17.43	***72.4***	$24.75
5	25.125	0.24	3	24	112.34	4.68	6.54	3	11	1.21	20.79	5.90	$6.01	$19.50	18.84	***78.3***	$25.51
5	25.125	0.24	3	24	112.34	4.68	6.54	3	13	1.43	24.82	6.65	$6.78	$19.50	20.12	***83.6***	$26.28
5	25.125	0.24	3	24	112.34	4.68	6.54	4	5	1.00	15.24	5.10	$5.20	$19.50	16.87	***70.1***	$24.70
5	25.125	0.24	3	24	112.34	4.68	6.54	4	7	1.40	22.65	6.44	$6.56	$19.50	19.44	***80.8***	$26.06
5	25.125	0.24	3	24	112.34	4.68	6.54	4	9	1.80	29.88	7.77	$7.93	$19.50	21.59	***89.7***	$27.43
5	25.125	0.24	3	24	112.34	4.68	6.54	4	11	2.20	37.00	9.11	$9.29	$19.50	23.47	***97.6***	$28.79
5	25.125	0.24	3	24	112.34	4.68	6.54	4	13	2.60	43.94	10.44	$10.65	$19.50	25.15	***104.5***	$30.15
5	25.125	0.24	3	24	112.34	4.68	6.54	5	5	1.55	23.35	6.97	$7.11	$19.50	19.66	***81.7***	$26.61
5	25.125	0.24	3	24	112.34	4.68	6.54	5	7	2.17	34.53	9.06	$9.24	$19.50	22.84	***94.9***	$28.74
5	25.125	0.24	3	24	112.34	4.68	6.54	5	9	2.79	45.32	11.15	$11.37	$19.50	25.47	***105.9***	$30.87
5	25.125	0.24	3	24	112.34	4.68	6.54	5	11	3.41	55.74	13.23	$13.50	$19.50	27.73	***115.2***	$33.00
5	25.125	0.24	3	24	112.34	4.68	6.54	5	13	4.03	65.26	15.32	$15.63	$19.50	29.63	***123.1***	$35.12
5	25.125	0.24	3	24	112.34	4.68	6.54	6	5	2.20	32.74	9.27	$9.46	$19.50	22.37	***93.0***	$28.95
5	25.125	0.24	3	24	112.34	4.68	6.54	6	7	3.08	48.06	12.27	$12.52	$19.50	26.09	***108.4***	$32.02
5	25.125	0.24	3	24	112.34	4.68	6.54	6	9	3.96	62.29	15.28	$15.58	$19.50	29.05	***120.7***	$35.08
5	25.125	0.24	3	24	112.34	4.68	6.54	6	11	4.84	75.12	18.28	$18.65	$19.50	31.45	***130.7***	$38.15
5	25.125	0.24	3	24	112.34	4.68	6.54	6	13	5.72	87.59	21.29	$21.71	$19.50	33.60	***139.6***	$41.21
5	25.125	0.24	3	30	112.34	3.74	5.27	3	5	0.55	8.44	3.29	$3.35	$19.50	14.91	***49.9***	$22.85
5	25.125	0.24	3	30	112.34	3.74	5.27	3	7	0.77	12.62	4.04	$4.12	$19.50	17.03	***57.0***	$23.62
5	25.125	0.24	3	30	112.34	3.74	5.27	3	9	0.99	16.74	4.79	$4.89	$19.50	18.83	***63.0***	$24.39
5	25.125	0.24	3	30	112.34	3.74	5.27	3	11	1.21	20.79	5.54	$5.65	$19.50	20.42	***68.3***	$25.15
5	25.125	0.24	3	30	112.34	3.74	5.27	3	13	1.43	24.82	6.30	$6.42	$19.50	21.85	***73.1***	$25.92
5	25.125	0.24	3	30	112.34	3.74	5.27	4	5	1.00	15.24	4.75	$4.84	$19.50	18.20	***60.9***	$24.34
5	25.125	0.24	3	30	112.34	3.74	5.27	4	7	1.40	22.65	6.08	$6.21	$19.50	21.09	***70.6***	$25.70
5	25.125	0.24	3	30	112.34	3.74	5.27	4	9	1.80	29.88	7.42	$7.57	$19.50	23.50	***78.6***	$27.07
5	25.125	0.24	3	30	112.34	3.74	5.27	4	11	2.20	37.00	8.76	$8.93	$19.50	25.61	***85.7***	$28.43
5	25.125	0.24	3	30	112.34	3.74	5.27	4	13	2.60	43.94	10.09	$10.29	$19.50	27.49	***92.0***	$29.79
5	25.125	0.24	3	30	112.34	3.74	5.27	5	5	1.55	23.35	6.62	$6.76	$19.50	21.34	***71.4***	$26.25
5	25.125	0.24	3	30	112.34	3.74	5.27	5	7	2.17	34.53	8.71	$8.88	$19.50	24.91	***83.3***	$28.38
5	25.125	0.24	3	30	112.34	3.74	5.27	5	9	2.79	45.32	10.79	$11.01	$19.50	27.85	***93.2***	$30.51
5	25.125	0.24	3	30	112.34	3.74	5.27	5	11	3.41	55.74	12.88	$13.14	$19.50	30.38	***101.6***	$32.64
5	25.125	0.24	3	30	112.34	3.74	5.27	5	13	4.03	65.26	14.97	$15.27	$19.50	32.49	***108.7***	$34.76
5	25.125	0.24	3	30	112.34	3.74	5.27	6	5	2.20	32.74	8.92	$9.10	$19.50	24.38	***81.6***	$28.59
5	25.125	0.24	3	30	112.34	3.74	5.27	6	7	3.08	48.06	11.92	$12.16	$19.50	28.54	***95.5***	$31.66
5	25.125	0.24	3	30	112.34	3.74	5.27	6	9	3.96	62.29	14.93	$15.22	$19.50	31.85	***106.6***	$34.72
5	25.125	0.24	3	30	112.34	3.74	5.27	6	11	4.84	75.12	17.93	$18.29	$19.50	34.53	***115.5***	$37.79
5	25.125	0.24	3	30	112.34	3.74	5.27	6	13	5.72	87.59	20.93	$21.35	$19.50	36.93	***123.5***	$40.85

White Text - inadequate temperature and shrinkage steel
Italic Text - inadequate structural capacity
Highlighted Row - good design – valid for use

1 in. = 25.4 mm
1 ft = 0.3048 m
1 kip = 4.448 kN

Table A-1 (continued). Interior Section Strength and Cost Calculations for All Configurations

Top Width (in)	Base Width (in)	Concrete Volume (yd^3 / ft)	Stirrups					Longitudinal Steel				Weight of Steel (lb / ft)	Cost of Steel ($ / ft)	Cost of Concrete ($ / ft)	Yield Line Calculations		Total Cost ($ / ft)
			Bar #	Spacing (in)	Length (in)	Length / ft (ft / ft)	M_C (k-ft / ft)	Bar #	Quantity	A_s (in^2)	M_w (k-ft / ft)				L_{CR} (ft)	ΦR_w (kips)	
5	25.125	0.24	3	36	112.34	3.12	4.39	3	5	0.55	8.44	3.05	$3.11	$19.50	15.81	***44.1***	$22.61
5	25.125	0.24	3	36	112.34	3.12	4.39	3	7	0.77	12.62	3.81	$3.88	$19.50	18.16	***50.6***	$23.38
5	25.125	0.24	3	36	112.34	3.12	4.39	3	9	0.99	16.74	4.56	$4.65	$19.50	20.15	***56.2***	$24.15
5	25.125	0.24	3	36	112.34	3.12	4.39	3	11	1.21	20.79	5.31	$5.42	$19.50	21.90	***61.1***	$24.91
5	25.125	0.24	3	36	112.34	3.12	4.39	3	13	1.43	24.82	6.06	$6.18	$19.50	23.47	***65.5***	$25.68
5	25.125	0.24	3	36	112.34	3.12	4.39	4	5	1.00	15.24	4.51	$4.60	$19.50	19.46	***54.3***	$24.10
5	25.125	0.24	3	36	112.34	3.12	4.39	4	7	1.40	22.65	5.85	$5.97	$19.50	22.64	***63.1***	$25.46
5	25.125	0.24	3	36	112.34	3.12	4.39	4	9	1.80	29.88	7.19	$7.33	$19.50	25.29	***70.5***	$26.83
5	25.125	0.24	3	36	112.34	3.12	4.39	4	11	2.20	37.00	8.52	$8.69	$19.50	27.61	***77.0***	$28.19
5	25.125	0.24	3	36	112.34	3.12	4.39	4	13	2.60	43.94	9.86	$10.05	$19.50	29.67	***82.7***	$29.55
5	25.125	0.24	3	36	112.34	3.12	4.39	5	5	1.55	23.35	6.39	$6.52	$19.50	22.91	***63.9***	$26.01
5	25.125	0.24	3	36	112.34	3.12	4.39	5	7	2.17	34.53	8.47	$8.64	$19.50	26.83	***74.8***	$28.14
5	25.125	0.24	3	36	112.34	3.12	4.39	5	9	2.79	45.32	10.56	$10.77	$19.50	30.06	***83.8***	$30.27
5	25.125	0.24	3	36	112.34	3.12	4.39	5	11	3.41	55.74	12.65	$12.90	$19.50	32.84	***91.6***	$32.40
5	25.125	0.24	3	36	112.34	3.12	4.39	5	13	4.03	65.26	14.73	$15.03	$19.50	35.16	***98.0***	$34.53
5	25.125	0.24	3	36	112.34	3.12	4.39	6	5	2.20	32.74	8.68	$8.86	$19.50	26.25	***73.2***	$28.36
5	25.125	0.24	3	36	112.34	3.12	4.39	6	7	3.08	48.06	11.69	$11.92	$19.50	30.82	***85.9***	$31.42
5	25.125	0.24	3	36	112.34	3.12	4.39	6	9	3.96	62.29	14.69	$14.99	$19.50	34.46	***96.1***	$34.48
5	25.125	0.24	3	36	112.34	3.12	4.39	6	11	4.84	75.12	17.70	$18.05	$19.50	37.39	***104.3***	$37.55
5	25.125	0.24	3	36	112.34	3.12	4.39	6	13	5.72	87.59	20.70	$21.11	$19.50	40.02	***111.6***	$40.61
5	25.125	0.24	4	12	113.66	9.47	23.42	3	5	0.55	8.44	8.21	$8.37	$19.50	10.26	***152.6***	$27.87
5	25.125	0.24	4	12	113.66	9.47	23.42	3	7	0.77	12.62	8.96	$9.14	$19.50	11.11	***165.3***	$28.64
5	25.125	0.24	4	12	113.66	9.47	23.42	3	9	0.99	16.74	9.71	$9.91	$19.50	11.87	***176.5***	$29.40
5	25.125	0.24	4	12	113.66	9.47	23.42	3	11	1.21	20.79	10.46	$10.67	$19.50	12.55	***186.6***	$30.17
5	25.125	0.24	4	12	113.66	9.47	23.42	3	13	1.43	24.82	11.21	$11.44	$19.50	13.17	***195.9***	$30.94
5	25.125	0.24	4	12	113.66	9.47	23.42	4	5	1.00	15.24	9.67	$9.86	$19.50	11.60	***172.6***	$29.36
5	25.125	0.24	4	12	113.66	9.47	23.42	4	7	1.40	22.65	11.00	$11.22	$19.50	12.84	***191.0***	$30.72
5	25.125	0.24	4	12	113.66	9.47	23.42	4	9	1.80	29.88	12.34	$12.59	$19.50	13.90	***206.7***	$32.08
5	25.125	0.24	4	12	113.66	9.47	23.42	4	11	2.20	37.00	13.67	$13.95	$19.50	14.84	220.7	$33.45
5	25.125	0.24	4	12	113.66	9.47	23.42	4	13	2.60	43.94	15.01	$15.31	$19.50	15.68	233.3	$34.81
5	25.125	0.24	4	12	113.66	9.47	23.42	5	5	1.55	23.35	11.54	$11.77	$19.50	12.95	***192.6***	$31.27
5	25.125	0.24	4	12	113.66	9.47	23.42	5	7	2.17	34.53	13.63	$13.90	$19.50	14.52	216.0	$33.40
5	25.125	0.24	4	12	113.66	9.47	23.42	5	9	2.79	45.32	15.71	$16.03	$19.50	15.84	235.7	$35.53
5	25.125	0.24	4	12	113.66	9.47	23.42	5	11	3.41	55.74	17.80	$18.16	$19.50	16.99	252.8	$37.65
5	25.125	0.24	4	12	113.66	9.47	23.42	5	13	4.03	65.26	19.89	$20.28	$19.50	17.96	267.2	$39.78
5	25.125	0.24	4	12	113.66	9.47	23.42	6	5	2.20	32.74	13.84	$14.11	$19.50	14.28	***212.5***	$33.61
5	25.125	0.24	4	12	113.66	9.47	23.42	6	7	3.08	48.06	16.84	$17.18	$19.50	16.16	240.4	$36.68
5	25.125	0.24	4	12	113.66	9.47	23.42	6	9	3.96	62.29	19.84	$20.24	$19.50	17.67	262.9	$39.74
5	25.125	0.24	4	12	113.66	9.47	23.42	6	11	4.84	75.12	22.85	$23.31	$19.50	18.90	281.2	$42.80
5	25.125	0.24	4	12	113.66	9.47	23.42	6	13	5.72	87.59	25.85	$26.37	$19.50	20.01	297.6	$45.87

White Text - inadequate temperature and shrinkage steel
Italic Text - inadequate structural capacity
Highlighted Row - good design – valid for use

1 in. = 25.4 mm
1 ft = 0.3048 m
1 kip = 4.448 kN

Table A-1 (continued). Interior Section Strength and Cost Calculations for All Configurations

Top Width (in)	Base Width (in)	Concrete Volume (yd^3 / ft)	Stirrups					Longitudinal Steel				Weight of Steel (lb / ft)	Cost of Steel ($ / ft)	Cost of Concrete ($ / ft)	Yield Line Calculations		Total Cost ($ / ft)
			Bar #	Spacing (in)	Length (in)	Length / ft (ft / ft)	M_C (k-ft / ft)	Bar #	Quantity	A_s (in^2)	M_w (k-ft / ft)				L_{CR} (ft)	ΦR_w (kips)	
5	25.125	0.24	4	18	113.66	6.31	15.72	3	5	0.55	8.44	6.10	$6.22	$19.50	11.10	***110.9***	$25.72
5	25.125	0.24	4	18	113.66	6.31	15.72	3	7	0.77	12.62	6.85	$6.99	$19.50	12.22	***122.0***	$26.49
5	25.125	0.24	4	18	113.66	6.31	15.72	3	9	0.99	16.74	7.60	$7.75	$19.50	13.18	***131.7***	$27.25
5	25.125	0.24	4	18	113.66	6.31	15.72	3	11	1.21	20.79	8.35	$8.52	$19.50	14.05	***140.3***	$28.02
5	25.125	0.24	4	18	113.66	6.31	15.72	3	13	1.43	24.82	9.11	$9.29	$19.50	14.84	***148.2***	$28.79
5	25.125	0.24	4	18	113.66	6.31	15.72	4	5	1.00	15.24	7.56	$7.71	$19.50	12.84	***128.3***	$27.21
5	25.125	0.24	4	18	113.66	6.31	15.72	4	7	1.40	22.65	8.89	$9.07	$19.50	14.42	***144.0***	$28.57
5	25.125	0.24	4	18	113.66	6.31	15.72	4	9	1.80	29.88	10.23	$10.43	$19.50	15.75	***157.3***	$29.93
5	25.125	0.24	4	18	113.66	6.31	15.72	4	11	2.20	37.00	11.57	$11.80	$19.50	16.93	***169.1***	$31.30
5	25.125	0.24	4	18	113.66	6.31	15.72	4	13	2.60	43.94	12.90	$13.16	$19.50	17.98	***179.6***	$32.66
5	25.125	0.24	4	18	113.66	6.31	15.72	5	5	1.55	23.35	9.43	$9.62	$19.50	14.55	***145.4***	$29.12
5	25.125	0.24	4	18	113.66	6.31	15.72	5	7	2.17	34.53	11.52	$11.75	$19.50	16.53	***165.1***	$31.25
5	25.125	0.24	4	18	113.66	6.31	15.72	5	9	2.79	45.32	13.60	$13.88	$19.50	18.18	***181.6***	$33.38
5	25.125	0.24	4	18	113.66	6.31	15.72	5	11	3.41	55.74	15.69	$16.00	$19.50	19.61	***195.9***	$35.50
5	25.125	0.24	4	18	113.66	6.31	15.72	5	13	4.03	65.26	17.78	$18.13	$19.50	20.81	***207.9***	$37.63
5	25.125	0.24	4	18	113.66	6.31	15.72	6	5	2.20	32.74	11.73	$11.96	$19.50	16.24	***162.2***	$31.46
5	25.125	0.24	4	18	113.66	6.31	15.72	6	7	3.08	48.06	14.73	$15.03	$19.50	18.57	***185.5***	$34.53
5	25.125	0.24	4	18	113.66	6.31	15.72	6	9	3.96	62.29	17.74	$18.09	$19.50	20.45	***204.2***	$37.59
5	25.125	0.24	4	18	113.66	6.31	15.72	6	11	4.84	75.12	20.74	$21.15	$19.50	21.97	219.4	$40.65
5	25.125	0.24	4	18	113.66	6.31	15.72	6	13	5.72	87.59	23.74	$24.22	$19.50	23.33	233.1	$43.72
5	25.125	0.24	4	24	113.66	4.74	11.83	3	5	0.55	8.44	5.04	$5.14	$19.50	11.86	***89.2***	$24.64
5	25.125	0.24	4	24	113.66	4.74	11.83	3	7	0.77	12.62	5.80	$5.91	$19.50	13.19	***99.2***	$25.41
5	25.125	0.24	4	24	113.66	4.74	11.83	3	9	0.99	16.74	6.55	$6.68	$19.50	14.34	***107.8***	$26.18
5	25.125	0.24	4	24	113.66	4.74	11.83	3	11	1.21	20.79	7.30	$7.45	$19.50	15.35	***115.4***	$26.94
5	25.125	0.24	4	24	113.66	4.74	11.83	3	13	1.43	24.82	8.05	$8.21	$19.50	16.28	***122.4***	$27.71
5	25.125	0.24	4	24	113.66	4.74	11.83	4	5	1.00	15.24	6.50	$6.63	$19.50	13.93	***104.8***	$26.13
5	25.125	0.24	4	24	113.66	4.74	11.83	4	7	1.40	22.65	7.84	$8.00	$19.50	15.79	***118.7***	$27.49
5	25.125	0.24	4	24	113.66	4.74	11.83	4	9	1.80	29.88	9.18	$9.36	$19.50	17.35	***130.4***	$28.86
5	25.125	0.24	4	24	113.66	4.74	11.83	4	11	2.20	37.00	10.51	$10.72	$19.50	18.72	***140.8***	$30.22
5	25.125	0.24	4	24	113.66	4.74	11.83	4	13	2.60	43.94	11.85	$12.08	$19.50	19.95	***150.0***	$31.58
5	25.125	0.24	4	24	113.66	4.74	11.83	5	5	1.55	23.35	8.38	$8.55	$19.50	15.95	***119.9***	$28.04
5	25.125	0.24	4	24	113.66	4.74	11.83	5	7	2.17	34.53	10.46	$10.67	$19.50	18.26	***137.3***	$30.17
5	25.125	0.24	4	24	113.66	4.74	11.83	5	9	2.79	45.32	12.55	$12.80	$19.50	20.19	***151.7***	$32.30
5	25.125	0.24	4	24	113.66	4.74	11.83	5	11	3.41	55.74	14.64	$14.93	$19.50	21.85	***164.2***	$34.43
5	25.125	0.24	4	24	113.66	4.74	11.83	5	13	4.03	65.26	16.72	$17.06	$19.50	23.24	***174.7***	$36.56
5	25.125	0.24	4	24	113.66	4.74	11.83	6	5	2.20	32.74	10.67	$10.89	$19.50	17.92	***134.7***	$30.39
5	25.125	0.24	4	24	113.66	4.74	11.83	6	7	3.08	48.06	13.68	$13.95	$19.50	20.64	***155.1***	$33.45
5	25.125	0.24	4	24	113.66	4.74	11.83	6	9	3.96	62.29	16.68	$17.02	$19.50	22.82	***171.5***	$36.51
5	25.125	0.24	4	24	113.66	4.74	11.83	6	11	4.84	75.12	19.69	$20.08	$19.50	24.58	***184.8***	$39.58
5	25.125	0.24	4	24	113.66	4.74	11.83	6	13	5.72	87.59	22.69	$23.14	$19.50	26.17	***196.7***	$42.64

White Text - inadequate temperature and shrinkage steel
Italic Text - inadequate structural capacity
Highlighted Row - good design – valid for use

1 in. = 25.4 mm
1 ft = 0.3048 m
1 kip = 4.448 kN

Table A-1 (continued). Interior Section Strength and Cost Calculations for All Configurations

Top Width (in)	Base Width (in)	Concrete Volume (yd^3 / ft)	Stirrups					Longitudinal Steel				Weight of Steel (lb / ft)	Cost of Steel ($ / ft)	Cost of Concrete ($ / ft)	Yield Line Calculations		Total Cost ($ / ft)
			Bar #	Spacing (in)	Length (in)	Length / ft (ft / ft)	M_C (k-ft / ft)	Bar #	Quantity	A_s (in^2)	M_w (k-ft / ft)				L_{CR} (ft)	ΦR_w (kips)	
5	25.125	0.24	4	30	113.66	3.79	9.50	3	5	0.55	8.44	4.41	$4.50	$19.50	12.55	***75.7***	$24.00
5	25.125	0.24	4	30	113.66	3.79	9.50	3	7	0.77	12.62	5.16	$5.27	$19.50	14.06	***84.9***	$24.76
5	25.125	0.24	4	30	113.66	3.79	9.50	3	9	0.99	16.74	5.91	$6.03	$19.50	15.36	***92.7***	$25.53
5	25.125	0.24	4	30	113.66	3.79	9.50	3	11	1.21	20.79	6.67	$6.80	$19.50	16.51	***99.7***	$26.30
5	25.125	0.24	4	30	113.66	3.79	9.50	3	13	1.43	24.82	7.42	$7.57	$19.50	17.56	***106.0***	$27.07
5	25.125	0.24	4	30	113.66	3.79	9.50	4	5	1.00	15.24	5.87	$5.99	$19.50	14.91	***90.0***	$25.49
5	25.125	0.24	4	30	113.66	3.79	9.50	4	7	1.40	22.65	7.21	$7.35	$19.50	17.00	***102.6***	$26.85
5	25.125	0.24	4	30	113.66	3.79	9.50	4	9	1.80	29.88	8.54	$8.71	$19.50	18.77	***113.3***	$28.21
5	25.125	0.24	4	30	113.66	3.79	9.50	4	11	2.20	37.00	9.88	$10.08	$19.50	20.31	***122.6***	$29.57
5	25.125	0.24	4	30	113.66	3.79	9.50	4	13	2.60	43.94	11.21	$11.44	$19.50	21.69	***130.9***	$30.94
5	25.125	0.24	4	30	113.66	3.79	9.50	5	5	1.55	23.35	7.75	$7.90	$19.50	17.19	***103.7***	$27.40
5	25.125	0.24	4	30	113.66	3.79	9.50	5	7	2.17	34.53	9.83	$10.03	$19.50	19.79	***119.5***	$29.53
5	25.125	0.24	4	30	113.66	3.79	9.50	5	9	2.79	45.32	11.92	$12.16	$19.50	21.96	***132.5***	$31.65
5	25.125	0.24	4	30	113.66	3.79	9.50	5	11	3.41	55.74	14.00	$14.28	$19.50	23.82	***143.8***	$33.78
5	25.125	0.24	4	30	113.66	3.79	9.50	5	13	4.03	65.26	16.09	$16.41	$19.50	25.38	***153.2***	$35.91
5	25.125	0.24	4	30	113.66	3.79	9.50	6	5	2.20	32.74	10.04	$10.24	$19.50	19.40	***117.1***	$29.74
5	25.125	0.24	4	30	113.66	3.79	9.50	6	7	3.08	48.06	13.04	$13.31	$19.50	22.46	***135.6***	$32.80
5	25.125	0.24	4	30	113.66	3.79	9.50	6	9	3.96	62.29	16.05	$16.37	$19.50	24.91	***150.3***	$35.87
5	25.125	0.24	4	30	113.66	3.79	9.50	6	11	4.84	75.12	19.05	$19.43	$19.50	26.89	***162.3***	$38.93
5	25.125	0.24	4	30	113.66	3.79	9.50	6	13	5.72	87.59	22.06	$22.50	$19.50	28.66	***173.0***	$42.00
5	25.125	0.24	4	36	113.66	3.16	7.94	3	5	0.55	8.44	3.99	$4.07	$19.50	13.18	***66.5***	$23.57
5	25.125	0.24	4	36	113.66	3.16	7.94	3	7	0.77	12.62	4.74	$4.84	$19.50	14.86	***75.0***	$24.33
5	25.125	0.24	4	36	113.66	3.16	7.94	3	9	0.99	16.74	5.49	$5.60	$19.50	16.30	***82.3***	$25.10
5	25.125	0.24	4	36	113.66	3.16	7.94	3	11	1.21	20.79	6.24	$6.37	$19.50	17.57	***88.7***	$25.87
5	25.125	0.24	4	36	113.66	3.16	7.94	3	13	1.43	24.82	7.00	$7.14	$19.50	18.72	***94.5***	$26.64
5	25.125	0.24	4	36	113.66	3.16	7.94	4	5	1.00	15.24	5.45	$5.56	$19.50	15.80	***79.7***	$25.06
5	25.125	0.24	4	36	113.66	3.16	7.94	4	7	1.40	22.65	6.78	$6.92	$19.50	18.11	***91.4***	$26.42
5	25.125	0.24	4	36	113.66	3.16	7.94	4	9	1.80	29.88	8.12	$8.28	$19.50	20.05	***101.2***	$27.78
5	25.125	0.24	4	36	113.66	3.16	7.94	4	11	2.20	37.00	9.46	$9.65	$19.50	21.75	***109.8***	$29.14
5	25.125	0.24	4	36	113.66	3.16	7.94	4	13	2.60	43.94	10.79	$11.01	$19.50	23.27	***117.4***	$30.51
5	25.125	0.24	4	36	113.66	3.16	7.94	5	5	1.55	23.35	7.32	$7.47	$19.50	18.31	***92.4***	$26.97
5	25.125	0.24	4	36	113.66	3.16	7.94	5	7	2.17	34.53	9.41	$9.60	$19.50	21.18	***106.9***	$29.10
5	25.125	0.24	4	36	113.66	3.16	7.94	5	9	2.79	45.32	11.50	$11.73	$19.50	23.55	***118.9***	$31.22
5	25.125	0.24	4	36	113.66	3.16	7.94	5	11	3.41	55.74	13.58	$13.85	$19.50	25.60	***129.2***	$33.35
5	25.125	0.24	4	36	113.66	3.16	7.94	5	13	4.03	65.26	15.67	$15.98	$19.50	27.32	***137.9***	$35.48
5	25.125	0.24	4	36	113.66	3.16	7.94	6	5	2.20	32.74	9.62	$9.81	$19.50	20.75	***104.7***	$29.31
5	25.125	0.24	4	36	113.66	3.16	7.94	6	7	3.08	48.06	12.62	$12.88	$19.50	24.11	***121.7***	$32.37
5	25.125	0.24	4	36	113.66	3.16	7.94	6	9	3.96	62.29	15.63	$15.94	$19.50	26.79	***135.2***	$35.44
5	25.125	0.24	4	36	113.66	3.16	7.94	6	11	4.84	75.12	18.63	$19.00	$19.50	28.96	***146.2***	$38.50
5	25.125	0.24	4	36	113.66	3.16	7.94	6	13	5.72	87.59	21.63	$22.07	$19.50	30.91	***156.0***	$41.57

White Text - inadequate temperature and shrinkage steel
Italic Text - inadequate structural capacity
Highlighted Row - good design – valid for use

1 in. = 25.4 mm
1 ft = 0.3048 m
1 kip = 4.448 kN

Table A-1 (continued). Interior Section Strength and Cost Calculations for All Configurations

Top Width (in)	Base Width (in)	Concrete Volume (yd^3 / ft)	Stirrups					Longitudinal Steel				Weight of Steel (lb / ft)	Cost of Steel ($ / ft)	Cost of Concrete ($ / ft)	Yield Line Calculations		Total Cost ($ / ft)
			Bar #	Spacing (in)	Length (in)	Length / ft (ft / ft)	M_C (k-ft / ft)	Bar #	Quantity	A_s (in^2)	M_w (k-ft / ft)				L_{CR} (ft)	ΦR_w (kips)	
5	25.125	0.24	5	12	114.35	9.53	35.75	3	5	0.55	8.44	11.82	$12.06	$19.50	9.58	217.6	$31.55
5	25.125	0.24	5	12	114.35	9.53	35.75	3	7	0.77	12.62	12.57	$12.82	$19.50	10.22	232.1	$32.32
5	25.125	0.24	5	12	114.35	9.53	35.75	3	9	0.99	16.74	13.32	$13.59	$19.50	10.79	245.0	$33.09
5	25.125	0.24	5	12	114.35	9.53	35.75	3	11	1.21	20.79	14.08	$14.36	$19.50	11.30	256.7	$33.86
5	25.125	0.24	5	12	114.35	9.53	35.75	3	13	1.43	24.82	14.83	$15.12	$19.50	11.78	267.6	$34.62
5	25.125	0.24	5	12	114.35	9.53	35.75	4	5	1.00	15.24	13.28	$13.54	$19.50	10.59	240.4	$33.04
5	25.125	0.24	5	12	114.35	9.53	35.75	4	7	1.40	22.65	14.62	$14.91	$19.50	11.53	261.8	$34.41
5	25.125	0.24	5	12	114.35	9.53	35.75	4	9	1.80	29.88	15.95	$16.27	$19.50	12.35	280.4	$35.77
5	25.125	0.24	5	12	114.35	9.53	35.75	4	11	2.20	37.00	17.29	$17.63	$19.50	13.08	297.1	$37.13
5	25.125	0.24	5	12	114.35	9.53	35.75	4	13	2.60	43.94	18.62	$19.00	$19.50	13.74	312.1	$38.49
5	25.125	0.24	5	12	114.35	9.53	35.75	5	5	1.55	23.35	15.15	$15.46	$19.50	11.61	263.7	$34.96
5	25.125	0.24	5	12	114.35	9.53	35.75	5	7	2.17	34.53	17.24	$17.58	$19.50	12.83	291.5	$37.08
5	25.125	0.24	5	12	114.35	9.53	35.75	5	9	2.79	45.32	19.33	$19.71	$19.50	13.87	315.0	$39.21
5	25.125	0.24	5	12	114.35	9.53	35.75	5	11	3.41	55.74	21.41	$21.84	$19.50	14.78	335.6	$41.34
5	25.125	0.24	5	12	114.35	9.53	35.75	5	13	4.03	65.26	23.50	$23.97	$19.50	15.54	353.0	$43.47
5	25.125	0.24	5	12	114.35	9.53	35.75	6	5	2.20	32.74	17.45	$17.80	$19.50	12.65	287.3	$37.30
5	25.125	0.24	5	12	114.35	9.53	35.75	6	7	3.08	48.06	20.45	$20.86	$19.50	14.12	320.6	$40.36
5	25.125	0.24	5	12	114.35	9.53	35.75	6	9	3.96	62.29	23.46	$23.93	$19.50	15.31	347.7	$43.42
5	25.125	0.24	5	12	114.35	9.53	35.75	6	11	4.84	75.12	26.46	$26.99	$19.50	16.29	369.9	$46.49
5	25.125	0.24	5	12	114.35	9.53	35.75	6	13	5.72	87.59	29.47	$30.05	$19.50	17.17	389.9	$49.55
5	25.125	0.24	5	18	114.35	6.35	24.17	3	5	0.55	8.44	8.51	$8.68	$19.50	10.20	***156.6***	$28.17
5	25.125	0.24	5	18	114.35	6.35	24.17	3	7	0.77	12.62	9.26	$9.44	$19.50	11.04	***169.5***	$28.94
5	25.125	0.24	5	18	114.35	6.35	24.17	3	9	0.99	16.74	10.01	$10.21	$19.50	11.78	***180.8***	$29.71
5	25.125	0.24	5	18	114.35	6.35	24.17	3	11	1.21	20.79	10.76	$10.98	$19.50	12.44	***191.0***	$30.48
5	25.125	0.24	5	18	114.35	6.35	24.17	3	13	1.43	24.82	11.51	$11.74	$19.50	13.05	***200.4***	$31.24
5	25.125	0.24	5	18	114.35	6.35	24.17	4	5	1.00	15.24	9.97	$10.17	$19.50	11.52	***176.8***	$29.66
5	25.125	0.24	5	18	114.35	6.35	24.17	4	7	1.40	22.65	11.30	$11.53	$19.50	12.73	***195.4***	$31.03
5	25.125	0.24	5	18	114.35	6.35	24.17	4	9	1.80	29.88	12.64	$12.89	$19.50	13.77	***211.4***	$32.39
5	25.125	0.24	5	18	114.35	6.35	24.17	4	11	2.20	37.00	13.97	$14.25	$19.50	14.69	225.6	$33.75
5	25.125	0.24	5	18	114.35	6.35	24.17	4	13	2.60	43.94	15.31	$15.62	$19.50	15.52	238.3	$35.11
5	25.125	0.24	5	18	114.35	6.35	24.17	5	5	1.55	23.35	11.84	$12.08	$19.50	12.84	***197.1***	$31.58
5	25.125	0.24	5	18	114.35	6.35	24.17	5	7	2.17	34.53	13.93	$14.21	$19.50	14.38	220.8	$33.70
5	25.125	0.24	5	18	114.35	6.35	24.17	5	9	2.79	45.32	16.01	$16.33	$19.50	15.68	240.7	$35.83
5	25.125	0.24	5	18	114.35	6.35	24.17	5	11	3.41	55.74	18.10	$18.46	$19.50	16.81	258.1	$37.96
5	25.125	0.24	5	18	114.35	6.35	24.17	5	13	4.03	65.26	20.19	$20.59	$19.50	17.76	272.7	$40.09
5	25.125	0.24	5	18	114.35	6.35	24.17	6	5	2.20	32.74	14.14	$14.42	$19.50	14.15	217.2	$33.92
5	25.125	0.24	5	18	114.35	6.35	24.17	6	7	3.08	48.06	17.14	$17.48	$19.50	15.99	245.5	$36.98
5	25.125	0.24	5	18	114.35	6.35	24.17	6	9	3.96	62.29	20.14	$20.55	$19.50	17.47	268.3	$40.05
5	25.125	0.24	5	18	114.35	6.35	24.17	6	11	4.84	75.12	23.15	$23.61	$19.50	18.68	286.9	$43.11
5	25.125	0.24	5	18	114.35	6.35	24.17	6	13	5.72	87.59	26.15	$26.68	$19.50	19.77	303.6	$46.17

White Text - inadequate temperature and shrinkage steel
Italic Text - inadequate structural capacity
Highlighted Row - good design – valid for use

1 in. = 25.4 mm
1 ft = 0.3048 m
1 kip = 4.448 kN

Table A-1 (continued). Interior Section Strength and Cost Calculations for All Configurations

Top Width (in)	Base Width (in)	Concrete Volume (yd^3 / ft)	Stirrups					Longitudinal Steel				Weight of Steel (lb / ft)	Cost of Steel ($ / ft)	Cost of Concrete ($ / ft)	Yield Line Calculations		Total Cost ($ / ft)
			Bar #	Spacing (in)	Length (in)	Length / ft (ft / ft)	M_C (k-ft / ft)	Bar #	Quantity	A_s (in^2)	M_w (k-ft / ft)				L_{CR} (ft)	ΦR_w (kips)	
5	25.125	0.24	5	24	114.35	4.76	18.25	3	5	0.55	8.44	6.85	$6.99	$19.50	10.76	***124.8***	$26.49
5	25.125	0.24	5	24	114.35	4.76	18.25	3	7	0.77	12.62	7.60	$7.75	$19.50	11.77	***136.5***	$27.25
5	25.125	0.24	5	24	114.35	4.76	18.25	3	9	0.99	16.74	8.35	$8.52	$19.50	12.65	***146.7***	$28.02
5	25.125	0.24	5	24	114.35	4.76	18.25	3	11	1.21	20.79	9.11	$9.29	$19.50	13.44	***155.9***	$28.79
5	25.125	0.24	5	24	114.35	4.76	18.25	3	13	1.43	24.82	9.86	$10.05	$19.50	14.17	***164.2***	$29.55
5	25.125	0.24	5	24	114.35	4.76	18.25	4	5	1.00	15.24	8.31	$8.48	$19.50	12.34	***143.1***	$27.97
5	25.125	0.24	5	24	114.35	4.76	18.25	4	7	1.40	22.65	9.65	$9.84	$19.50	13.78	***159.8***	$29.34
5	25.125	0.24	5	24	114.35	4.76	18.25	4	9	1.80	29.88	10.98	$11.20	$19.50	15.01	***174.0***	$30.70
5	25.125	0.24	5	24	114.35	4.76	18.25	4	11	2.20	37.00	12.32	$12.56	$19.50	16.09	***186.6***	$32.06
5	25.125	0.24	5	24	114.35	4.76	18.25	4	13	2.60	43.94	13.65	$13.93	$19.50	17.06	***197.8***	$33.43
5	25.125	0.24	5	24	114.35	4.76	18.25	5	5	1.55	23.35	10.18	$10.39	$19.50	13.91	***161.3***	$29.89
5	25.125	0.24	5	24	114.35	4.76	18.25	5	7	2.17	34.53	12.27	$12.52	$19.50	15.73	***182.3***	$32.01
5	25.125	0.24	5	24	114.35	4.76	18.25	5	9	2.79	45.32	14.36	$14.64	$19.50	17.25	***200.0***	$34.14
5	25.125	0.24	5	24	114.35	4.76	18.25	5	11	3.41	55.74	16.44	$16.77	$19.50	18.56	215.2	$36.27
5	25.125	0.24	5	24	114.35	4.76	18.25	5	13	4.03	65.26	18.53	$18.90	$19.50	19.67	228.1	$38.40
5	25.125	0.24	5	24	114.35	4.76	18.25	6	5	2.20	32.74	12.48	$12.73	$19.50	15.45	***179.2***	$32.23
5	25.125	0.24	5	24	114.35	4.76	18.25	6	7	3.08	48.06	15.48	$15.79	$19.50	17.61	***204.1***	$35.29
5	25.125	0.24	5	24	114.35	4.76	18.25	6	9	3.96	62.29	18.49	$18.86	$19.50	19.34	224.2	$38.36
5	25.125	0.24	5	24	114.35	4.76	18.25	6	11	4.84	75.12	21.49	$21.92	$19.50	20.74	240.5	$41.42
5	25.125	0.24	5	24	114.35	4.76	18.25	6	13	5.72	87.59	24.50	$24.99	$19.50	22.01	255.1	$44.48
5	25.125	0.24	5	30	114.35	3.81	14.67	3	5	0.55	8.44	5.86	$5.97	$19.50	11.28	***105.1***	$25.47
5	25.125	0.24	5	30	114.35	3.81	14.67	3	7	0.77	12.62	6.61	$6.74	$19.50	12.44	***115.9***	$26.24
5	25.125	0.24	5	30	114.35	3.81	14.67	3	9	0.99	16.74	7.36	$7.51	$19.50	13.45	***125.3***	$27.01
5	25.125	0.24	5	30	114.35	3.81	14.67	3	11	1.21	20.79	8.11	$8.27	$19.50	14.35	***133.7***	$27.77
5	25.125	0.24	5	30	114.35	3.81	14.67	3	13	1.43	24.82	8.86	$9.04	$19.50	15.17	***141.3***	$28.54
5	25.125	0.24	5	30	114.35	3.81	14.67	4	5	1.00	15.24	7.32	$7.46	$19.50	13.09	***122.0***	$26.96
5	25.125	0.24	5	30	114.35	3.81	14.67	4	7	1.40	22.65	8.65	$8.82	$19.50	14.73	***137.3***	$28.32
5	25.125	0.24	5	30	114.35	3.81	14.67	4	9	1.80	29.88	9.99	$10.19	$19.50	16.12	***150.2***	$29.69
5	25.125	0.24	5	30	114.35	3.81	14.67	4	11	2.20	37.00	11.32	$11.55	$19.50	17.34	***161.6***	$31.05
5	25.125	0.24	5	30	114.35	3.81	14.67	4	13	2.60	43.94	12.66	$12.91	$19.50	18.44	***171.8***	$32.41
5	25.125	0.24	5	30	114.35	3.81	14.67	5	5	1.55	23.35	9.19	$9.37	$19.50	14.87	***138.6***	$28.87
5	25.125	0.24	5	30	114.35	3.81	14.67	5	7	2.17	34.53	11.28	$11.50	$19.50	16.93	***157.8***	$31.00
5	25.125	0.24	5	30	114.35	3.81	14.67	5	9	2.79	45.32	13.36	$13.63	$19.50	18.64	***173.7***	$33.13
5	25.125	0.24	5	30	114.35	3.81	14.67	5	11	3.41	55.74	15.45	$15.76	$19.50	20.13	***187.5***	$35.26
5	25.125	0.24	5	30	114.35	3.81	14.67	5	13	4.03	65.26	17.53	$17.89	$19.50	21.37	***199.1***	$37.38
5	25.125	0.24	5	30	114.35	3.81	14.67	6	5	2.20	32.74	11.49	$11.72	$19.50	16.62	***154.9***	$31.21
5	25.125	0.24	5	30	114.35	3.81	14.67	6	7	3.08	48.06	14.49	$14.78	$19.50	19.05	***177.5***	$34.28
5	25.125	0.24	5	30	114.35	3.81	14.67	6	9	3.96	62.29	17.49	$17.84	$19.50	20.99	***195.6***	$37.34
5	25.125	0.24	5	30	114.35	3.81	14.67	6	11	4.84	75.12	20.50	$20.91	$19.50	22.57	***210.3***	$40.41
5	25.125	0.24	5	30	114.35	3.81	14.67	6	13	5.72	87.59	23.50	$23.97	$19.50	23.99	223.5	$43.47

White Text - inadequate temperature and shrinkage steel
Italic Text - inadequate structural capacity
Highlighted Row - good design – valid for use

1 in. = 25.4 mm
1 ft = 0.3048 m
1 kip = 4.448 kN

Table A-1 (continued). Interior Section Strength and Cost Calculations for All Configurations

Top Width (in)	Base Width (in)	Concrete Volume (yd^3 / ft)	Stirrups					Longitudinal Steel				Weight of Steel (lb / ft)	Cost of Steel ($ / ft)	Cost of Concrete ($ / ft)	Yield Line Calculations		Total Cost ($ / ft)
			Bar #	Spacing (in)	Length (in)	Length / ft (ft / ft)	M_C (k-ft / ft)	Bar #	Quantity	A_s (in^2)	M_w (k-ft / ft)				L_{CR} (ft)	ΦR_w (kips)	
5	25.125	0.24	5	36	114.35	3.18	12.25	3	5	0.55	8.44	5.19	$5.30	$19.50	11.76	***91.5***	$24.80
5	25.125	0.24	5	36	114.35	3.18	12.25	3	7	0.77	12.62	5.95	$6.06	$19.50	13.06	***101.7***	$25.56
5	25.125	0.24	5	36	114.35	3.18	12.25	3	9	0.99	16.74	6.70	$6.83	$19.50	14.19	***110.4***	$26.33
5	25.125	0.24	5	36	114.35	3.18	12.25	3	11	1.21	20.79	7.45	$7.60	$19.50	15.18	***118.1***	$27.10
5	25.125	0.24	5	36	114.35	3.18	12.25	3	13	1.43	24.82	8.20	$8.37	$19.50	16.09	***125.2***	$27.86
5	25.125	0.24	5	36	114.35	3.18	12.25	4	5	1.00	15.24	6.65	$6.79	$19.50	13.79	***107.3***	$26.28
5	25.125	0.24	5	36	114.35	3.18	12.25	4	7	1.40	22.65	7.99	$8.15	$19.50	15.61	***121.5***	$27.65
5	25.125	0.24	5	36	114.35	3.18	12.25	4	9	1.80	29.88	9.33	$9.51	$19.50	17.14	***133.4***	$29.01
5	25.125	0.24	5	36	114.35	3.18	12.25	4	11	2.20	37.00	10.66	$10.87	$19.50	18.49	***143.9***	$30.37
5	25.125	0.24	5	36	114.35	3.18	12.25	4	13	2.60	43.94	12.00	$12.24	$19.50	19.70	***153.3***	$31.74
5	25.125	0.24	5	36	114.35	3.18	12.25	5	5	1.55	23.35	8.53	$8.70	$19.50	15.77	***122.7***	$28.20
5	25.125	0.24	5	36	114.35	3.18	12.25	5	7	2.17	34.53	10.61	$10.83	$19.50	18.04	***140.4***	$30.32
5	25.125	0.24	5	36	114.35	3.18	12.25	5	9	2.79	45.32	12.70	$12.95	$19.50	19.93	***155.1***	$32.45
5	25.125	0.24	5	36	114.35	3.18	12.25	5	11	3.41	55.74	14.79	$15.08	$19.50	21.56	***167.8***	$34.58
5	25.125	0.24	5	36	114.35	3.18	12.25	5	13	4.03	65.26	16.87	$17.21	$19.50	22.93	***178.4***	$36.71
5	25.125	0.24	5	36	114.35	3.18	12.25	6	5	2.20	32.74	10.82	$11.04	$19.50	17.70	***137.7***	$30.54
5	25.125	0.24	5	36	114.35	3.18	12.25	6	7	3.08	48.06	13.83	$14.10	$19.50	20.37	***158.5***	$33.60
5	25.125	0.24	5	36	114.35	3.18	12.25	6	9	3.96	62.29	16.83	$17.17	$19.50	22.51	***175.2***	$36.67
5	25.125	0.24	5	36	114.35	3.18	12.25	6	11	4.84	75.12	19.84	$20.23	$19.50	24.24	***188.7***	$39.73
5	25.125	0.24	5	36	114.35	3.18	12.25	6	13	5.72	87.59	22.84	$23.30	$19.50	25.80	***200.8***	$42.79
5	25.125	0.24	6	12	128.99	10.75	49.92	3	5	0.55	8.44	18.03	$18.39	$19.50	9.18	291.2	$37.88
5	25.125	0.24	6	12	128.99	10.75	49.92	3	7	0.77	12.62	18.78	$19.15	$19.50	9.68	306.9	$38.65
5	25.125	0.24	6	12	128.99	10.75	49.92	3	9	0.99	16.74	19.53	$19.92	$19.50	10.13	321.1	$39.42
5	25.125	0.24	6	12	128.99	10.75	49.92	3	11	1.21	20.79	20.28	$20.69	$19.50	10.54	334.2	$40.19
5	25.125	0.24	6	12	128.99	10.75	49.92	3	13	1.43	24.82	21.03	$21.45	$19.50	10.92	346.4	$40.95
5	25.125	0.24	6	12	128.99	10.75	49.92	4	5	1.00	15.24	19.49	$19.87	$19.50	9.97	316.1	$39.37
5	25.125	0.24	6	12	128.99	10.75	49.92	4	7	1.40	22.65	20.82	$21.24	$19.50	10.72	339.9	$40.74
5	25.125	0.24	6	12	128.99	10.75	49.92	4	9	1.80	29.88	22.16	$22.60	$19.50	11.38	360.8	$42.10
5	25.125	0.24	6	12	128.99	10.75	49.92	4	11	2.20	37.00	23.49	$23.96	$19.50	11.98	379.8	$43.46
5	25.125	0.24	6	12	128.99	10.75	49.92	4	13	2.60	43.94	24.83	$25.33	$19.50	12.52	396.9	$44.82
5	25.125	0.24	6	12	128.99	10.75	49.92	5	5	1.55	23.35	21.36	$21.79	$19.50	10.79	342.0	$41.29
5	25.125	0.24	6	12	128.99	10.75	49.92	5	7	2.17	34.53	23.45	$23.92	$19.50	11.77	373.4	$43.41
5	25.125	0.24	6	12	128.99	10.75	49.92	5	9	2.79	45.32	25.53	$26.04	$19.50	12.62	400.2	$45.54
5	25.125	0.24	6	12	128.99	10.75	49.92	5	11	3.41	55.74	27.62	$28.17	$19.50	13.37	423.8	$47.67
5	25.125	0.24	6	12	128.99	10.75	49.92	5	13	4.03	65.26	29.70	$30.30	$19.50	14.00	443.9	$49.80
5	25.125	0.24	6	12	128.99	10.75	49.92	6	5	2.20	32.74	23.66	$24.13	$19.50	11.62	368.6	$43.63
5	25.125	0.24	6	12	128.99	10.75	49.92	6	7	3.08	48.06	26.66	$27.19	$19.50	12.82	406.6	$46.69
5	25.125	0.24	6	12	128.99	10.75	49.92	6	9	3.96	62.29	29.66	$30.26	$19.50	13.81	437.8	$49.76
5	25.125	0.24	6	12	128.99	10.75	49.92	6	11	4.84	75.12	32.67	$33.32	$19.50	14.61	463.4	$52.82
5	25.125	0.24	6	12	128.99	10.75	49.92	6	13	5.72	87.59	35.67	$36.38	$19.50	15.34	486.6	$55.88

White Text - inadequate temperature and shrinkage steel
Italic Text - inadequate structural capacity
Highlighted Row - good design – valid for use

1 in. = 25.4 mm
1 ft = 0.3048 m
1 kip = 4.448 kN

Table A-1 (continued). Interior Section Strength and Cost Calculations for All Configurations

Top Width (in)	Base Width (in)	Concrete Volume (yd^3 / ft)	Stirrups					Longitudinal Steel				Weight of Steel (lb / ft)	Cost of Steel ($ / ft)	Cost of Concrete ($ / ft)	Yield Line Calculations		Total Cost ($ / ft)
			Bar #	Spacing (in)	Length (in)	Length / ft (ft / ft)	M_C (k-ft / ft)	Bar #	Quantity	A_s (in^2)	M_w (k-ft / ft)				L_{CR} (ft)	ΦR_w (kips)	
5	25.125	0.24	6	18	128.99	7.17	33.94	3	5	0.55	8.44	12.64	$12.90	$19.50	9.65	***208.2***	$32.40
5	25.125	0.24	6	18	128.99	7.17	33.94	3	7	0.77	12.62	13.40	$13.66	$19.50	10.31	222.4	$33.16
5	25.125	0.24	6	18	128.99	7.17	33.94	3	9	0.99	16.74	14.15	$14.43	$19.50	10.90	235.1	$33.93
5	25.125	0.24	6	18	128.99	7.17	33.94	3	11	1.21	20.79	14.90	$15.20	$19.50	11.44	246.7	$34.70
5	25.125	0.24	6	18	128.99	7.17	33.94	3	13	1.43	24.82	15.65	$15.96	$19.50	11.94	257.4	$35.46
5	25.125	0.24	6	18	128.99	7.17	33.94	4	5	1.00	15.24	14.10	$14.39	$19.50	10.70	230.6	$33.88
5	25.125	0.24	6	18	128.99	7.17	33.94	4	7	1.40	22.65	15.44	$15.75	$19.50	11.67	251.7	$35.25
5	25.125	0.24	6	18	128.99	7.17	33.94	4	9	1.80	29.88	16.78	$17.11	$19.50	12.52	269.9	$36.61
5	25.125	0.24	6	18	128.99	7.17	33.94	4	11	2.20	37.00	18.11	$18.47	$19.50	13.27	286.2	$37.97
5	25.125	0.24	6	18	128.99	7.17	33.94	4	13	2.60	43.94	19.45	$19.84	$19.50	13.96	301.0	$39.34
5	25.125	0.24	6	18	128.99	7.17	33.94	5	5	1.55	23.35	15.98	$16.30	$19.50	11.76	253.6	$35.80
5	25.125	0.24	6	18	128.99	7.17	33.94	5	7	2.17	34.53	18.06	$18.43	$19.50	13.02	280.7	$37.92
5	25.125	0.24	6	18	128.99	7.17	33.94	5	9	2.79	45.32	20.15	$20.55	$19.50	14.09	303.8	$40.05
5	25.125	0.24	6	18	128.99	7.17	33.94	5	11	3.41	55.74	22.24	$22.68	$19.50	15.02	323.9	$42.18
5	25.125	0.24	6	18	128.99	7.17	33.94	5	13	4.03	65.26	24.32	$24.81	$19.50	15.81	340.9	$44.31
5	25.125	0.24	6	18	128.99	7.17	33.94	6	5	2.20	32.74	18.27	$18.64	$19.50	12.83	276.6	$38.14
5	25.125	0.24	6	18	128.99	7.17	33.94	6	7	3.08	48.06	21.28	$21.70	$19.50	14.34	309.2	$41.20
5	25.125	0.24	6	18	128.99	7.17	33.94	6	9	3.96	62.29	24.28	$24.77	$19.50	15.57	335.8	$44.27
5	25.125	0.24	6	18	128.99	7.17	33.94	6	11	4.84	75.12	27.29	$27.83	$19.50	16.57	357.4	$47.33
5	25.125	0.24	6	18	128.99	7.17	33.94	6	13	5.72	87.59	30.29	$30.90	$19.50	17.48	377.0	$50.39
5	25.125	0.24	6	24	128.99	5.37	25.71	3	5	0.55	8.44	9.95	$10.15	$19.50	10.09	***164.8***	$29.65
5	25.125	0.24	6	24	128.99	5.37	25.71	3	7	0.77	12.62	10.70	$10.92	$19.50	10.89	***177.9***	$30.42
5	25.125	0.24	6	24	128.99	5.37	25.71	3	9	0.99	16.74	11.46	$11.69	$19.50	11.60	***189.5***	$31.18
5	25.125	0.24	6	24	128.99	5.37	25.71	3	11	1.21	20.79	12.21	$12.45	$19.50	12.24	***200.0***	$31.95
5	25.125	0.24	6	24	128.99	5.37	25.71	3	13	1.43	24.82	12.96	$13.22	$19.50	12.83	***209.6***	$32.72
5	25.125	0.24	6	24	128.99	5.37	25.71	4	5	1.00	15.24	11.41	$11.64	$19.50	11.35	***185.4***	$31.14
5	25.125	0.24	6	24	128.99	5.37	25.71	4	7	1.40	22.65	12.75	$13.00	$19.50	12.52	***204.5***	$32.50
5	25.125	0.24	6	24	128.99	5.37	25.71	4	9	1.80	29.88	14.08	$14.37	$19.50	13.52	220.8	$33.86
5	25.125	0.24	6	24	128.99	5.37	25.71	4	11	2.20	37.00	15.42	$15.73	$19.50	14.41	235.4	$35.23
5	25.125	0.24	6	24	128.99	5.37	25.71	4	13	2.60	43.94	16.76	$17.09	$19.50	15.21	248.5	$36.59
5	25.125	0.24	6	24	128.99	5.37	25.71	5	5	1.55	23.35	13.29	$13.55	$19.50	12.62	***206.1***	$33.05
5	25.125	0.24	6	24	128.99	5.37	25.71	5	7	2.17	34.53	15.37	$15.68	$19.50	14.11	230.5	$35.18
5	25.125	0.24	6	24	128.99	5.37	25.71	5	9	2.79	45.32	17.46	$17.81	$19.50	15.37	251.0	$37.31
5	25.125	0.24	6	24	128.99	5.37	25.71	5	11	3.41	55.74	19.55	$19.94	$19.50	16.46	268.8	$39.44
5	25.125	0.24	6	24	128.99	5.37	25.71	5	13	4.03	65.26	21.63	$22.06	$19.50	17.38	283.9	$41.56
5	25.125	0.24	6	24	128.99	5.37	25.71	6	5	2.20	32.74	15.58	$15.89	$19.50	13.89	226.8	$35.39
5	25.125	0.24	6	24	128.99	5.37	25.71	6	7	3.08	48.06	18.59	$18.96	$19.50	15.66	255.8	$38.46
5	25.125	0.24	6	24	128.99	5.37	25.71	6	9	3.96	62.29	21.59	$22.02	$19.50	17.10	279.3	$41.52
5	25.125	0.24	6	24	128.99	5.37	25.71	6	11	4.84	75.12	24.59	$25.09	$19.50	18.27	298.4	$44.59
5	25.125	0.24	6	24	128.99	5.37	25.71	6	13	5.72	87.59	27.60	$28.15	$19.50	19.32	315.6	$47.65

White Text - inadequate temperature and shrinkage steel
Italic Text - inadequate structural capacity
Highlighted Row - good design – valid for use

1 in. = 25.4 mm
1 ft = 0.3048 m
1 kip = 4.448 kN

Table A-1 (continued). Interior Section Strength and Cost Calculations for All Configurations

Top Width (in)	Base Width (in)	Concrete Volume (yd^3 / ft)	Stirrups					Longitudinal Steel				Weight of Steel (lb / ft)	Cost of Steel ($ / ft)	Cost of Concrete ($ / ft)	Yield Line Calculations		Total Cost ($ / ft)
			Bar #	Spacing (in)	Length (in)	Length / ft (ft / ft)	M_C (k-ft / ft)	Bar #	Quantity	A_s (in^2)	M_w (k-ft / ft)				L_{CR} (ft)	ΦR_w (kips)	
5	25.125	0.24	6	30	128.99	4.30	20.67	3	5	0.55	8.44	8.34	$8.50	$19.50	10.50	***137.8***	$28.00
5	25.125	0.24	6	30	128.99	4.30	20.67	3	7	0.77	12.62	9.09	$9.27	$19.50	11.43	***150.1***	$28.77
5	25.125	0.24	6	30	128.99	4.30	20.67	3	9	0.99	16.74	9.84	$10.04	$19.50	12.25	***160.8***	$29.54
5	25.125	0.24	6	30	128.99	4.30	20.67	3	11	1.21	20.79	10.59	$10.81	$19.50	12.98	***170.4***	$30.30
5	25.125	0.24	6	30	128.99	4.30	20.67	3	13	1.43	24.82	11.35	$11.57	$19.50	13.65	***179.2***	$31.07
5	25.125	0.24	6	30	128.99	4.30	20.67	4	5	1.00	15.24	9.80	$9.99	$19.50	11.96	***157.0***	$29.49
5	25.125	0.24	6	30	128.99	4.30	20.67	4	7	1.40	22.65	11.13	$11.36	$19.50	13.29	***174.5***	$30.86
5	25.125	0.24	6	30	128.99	4.30	20.67	4	9	1.80	29.88	12.47	$12.72	$19.50	14.43	***189.5***	$32.22
5	25.125	0.24	6	30	128.99	4.30	20.67	4	11	2.20	37.00	13.81	$14.08	$19.50	15.44	***202.8***	$33.58
5	25.125	0.24	6	30	128.99	4.30	20.67	4	13	2.60	43.94	15.14	$15.44	$19.50	16.35	214.7	$34.94
5	25.125	0.24	6	30	128.99	4.30	20.67	5	5	1.55	23.35	11.67	$11.91	$19.50	13.41	***176.1***	$31.41
5	25.125	0.24	6	30	128.99	4.30	20.67	5	7	2.17	34.53	13.76	$14.03	$19.50	15.10	***198.3***	$33.53
5	25.125	0.24	6	30	128.99	4.30	20.67	5	9	2.79	45.32	15.85	$16.16	$19.50	16.52	216.9	$35.66
5	25.125	0.24	6	30	128.99	4.30	20.67	5	11	3.41	55.74	17.93	$18.29	$19.50	17.75	233.1	$37.79
5	25.125	0.24	6	30	128.99	4.30	20.67	5	13	4.03	65.26	20.02	$20.42	$19.50	18.79	246.7	$39.92
5	25.125	0.24	6	30	128.99	4.30	20.67	6	5	2.20	32.74	13.97	$14.25	$19.50	14.85	***195.0***	$33.75
5	25.125	0.24	6	30	128.99	4.30	20.67	6	7	3.08	48.06	16.97	$17.31	$19.50	16.86	221.3	$36.81
5	25.125	0.24	6	30	128.99	4.30	20.67	6	9	3.96	62.29	19.98	$20.38	$19.50	18.48	242.6	$39.87
5	25.125	0.24	6	30	128.99	4.30	20.67	6	11	4.84	75.12	22.98	$23.44	$19.50	19.79	259.9	$42.94
5	25.125	0.24	6	30	128.99	4.30	20.67	6	13	5.72	87.59	25.98	$26.50	$19.50	20.98	275.4	$46.00
5	25.125	0.24	6	36	128.99	3.58	17.28	3	5	0.55	8.44	7.26	$7.41	$19.50	10.88	***119.5***	$26.91
5	25.125	0.24	6	36	128.99	3.58	17.28	3	7	0.77	12.62	8.01	$8.17	$19.50	11.93	***131.0***	$27.67
5	25.125	0.24	6	36	128.99	3.58	17.28	3	9	0.99	16.74	8.77	$8.94	$19.50	12.84	***141.0***	$28.44
5	25.125	0.24	6	36	128.99	3.58	17.28	3	11	1.21	20.79	9.52	$9.71	$19.50	13.66	***149.9***	$29.21
5	25.125	0.24	6	36	128.99	3.58	17.28	3	13	1.43	24.82	10.27	$10.48	$19.50	14.41	***158.1***	$29.97
5	25.125	0.24	6	36	128.99	3.58	17.28	4	5	1.00	15.24	8.72	$8.90	$19.50	12.52	***137.5***	$28.39
5	25.125	0.24	6	36	128.99	3.58	17.28	4	7	1.40	22.65	10.06	$10.26	$19.50	14.01	***153.8***	$29.76
5	25.125	0.24	6	36	128.99	3.58	17.28	4	9	1.80	29.88	11.39	$11.62	$19.50	15.27	***167.6***	$31.12
5	25.125	0.24	6	36	128.99	3.58	17.28	4	11	2.20	37.00	12.73	$12.98	$19.50	16.39	***179.9***	$32.48
5	25.125	0.24	6	36	128.99	3.58	17.28	4	13	2.60	43.94	14.07	$14.35	$19.50	17.39	***190.9***	$33.85
5	25.125	0.24	6	36	128.99	3.58	17.28	5	5	1.55	23.35	10.60	$10.81	$19.50	14.14	***155.2***	$30.31
5	25.125	0.24	6	36	128.99	3.58	17.28	5	7	2.17	34.53	12.68	$12.94	$19.50	16.01	***175.8***	$32.44
5	25.125	0.24	6	36	128.99	3.58	17.28	5	9	2.79	45.32	14.77	$15.06	$19.50	17.58	***193.0***	$34.56
5	25.125	0.24	6	36	128.99	3.58	17.28	5	11	3.41	55.74	16.85	$17.19	$19.50	18.94	***207.9***	$36.69
5	25.125	0.24	6	36	128.99	3.58	17.28	5	13	4.03	65.26	18.94	$19.32	$19.50	20.08	220.4	$38.82
5	25.125	0.24	6	36	128.99	3.58	17.28	6	5	2.20	32.74	12.89	$13.15	$19.50	15.73	***172.7***	$32.65
5	25.125	0.24	6	36	128.99	3.58	17.28	6	7	3.08	48.06	15.90	$16.21	$19.50	17.95	***197.0***	$35.71
5	25.125	0.24	6	36	128.99	3.58	17.28	6	9	3.96	62.29	18.90	$19.28	$19.50	19.73	216.6	$38.78
5	25.125	0.24	6	36	128.99	3.58	17.28	6	11	4.84	75.12	21.90	$22.34	$19.50	21.18	232.5	$41.84
5	25.125	0.24	6	36	128.99	3.58	17.28	6	13	5.72	87.59	24.91	$25.41	$19.50	22.48	246.8	$44.90

White Text - inadequate temperature and shrinkage steel
Italic Text - inadequate structural capacity
Highlighted Row - good design – valid for use

1 in. = 25.4 mm
1 ft = 0.3048 m
1 kip = 4.448 kN

Table A-1 (continued). Interior Section Strength and Cost Calculations for All Configurations

Top Width (in)	Base Width (in)	Concrete Volume (yd^3 / ft)	Stirrups					Longitudinal Steel				Weight of Steel (lb / ft)	Cost of Steel ($ / ft)	Cost of Concrete ($ / ft)	Yield Line Calculations		Total Cost ($ / ft)
			Bar #	Spacing (in)	Length (in)	Length / ft (ft / ft)	M_C (k-ft / ft)	Bar #	Quantity	A_s (in^2)	M_w (k-ft / ft)				L_{CR} (ft)	ΦR_w (kips)	
6	26.125	0.25	3	12	114.59	9.55	13.58	3	5	0.55	8.85	5.47	$5.58	$20.44	11.61	***100.2***	$26.02
6	26.125	0.25	3	12	114.59	9.55	13.58	3	7	0.77	13.21	6.22	$6.35	$20.44	12.86	***110.9***	$26.79
6	26.125	0.25	3	12	114.59	9.55	13.58	3	9	0.99	17.50	6.97	$7.11	$20.44	13.94	***120.3***	$27.55
6	26.125	0.25	3	12	114.59	9.55	13.58	3	11	1.21	21.76	7.73	$7.88	$20.44	14.90	***128.6***	$28.32
6	26.125	0.25	3	12	114.59	9.55	13.58	3	13	1.43	26.00	8.48	$8.65	$20.44	15.79	***136.2***	$29.09
6	26.125	0.25	3	12	114.59	9.55	13.58	4	5	1.00	15.94	6.93	$7.07	$20.44	13.56	***117.0***	$27.51
6	26.125	0.25	3	12	114.59	9.55	13.58	4	7	1.40	23.71	8.27	$8.43	$20.44	15.32	***132.2***	$28.87
6	26.125	0.25	3	12	114.59	9.55	13.58	4	9	1.80	31.29	9.60	$9.79	$20.44	16.80	***145.0***	$30.23
6	26.125	0.25	3	12	114.59	9.55	13.58	4	11	2.20	38.76	10.94	$11.16	$20.44	18.12	***156.3***	$31.60
6	26.125	0.25	3	12	114.59	9.55	13.58	4	13	2.60	46.06	12.27	$12.52	$20.44	19.29	***166.5***	$32.96
6	26.125	0.25	3	12	114.59	9.55	13.58	5	5	1.55	24.47	8.81	$8.98	$20.44	15.48	***133.5***	$29.42
6	26.125	0.25	3	12	114.59	9.55	13.58	5	7	2.17	36.18	10.89	$11.11	$20.44	17.68	***152.5***	$31.55
6	26.125	0.25	3	12	114.59	9.55	13.58	5	9	2.79	47.50	12.98	$13.24	$20.44	19.51	***168.4***	$33.68
6	26.125	0.25	3	12	114.59	9.55	13.58	5	11	3.41	58.47	15.06	$15.36	$20.44	21.10	***182.1***	$35.80
6	26.125	0.25	3	12	114.59	9.55	13.58	5	13	4.03	68.56	17.15	$17.49	$20.44	22.44	***193.7***	$37.93
6	26.125	0.25	3	12	114.59	9.55	13.58	6	5	2.20	34.29	11.10	$11.32	$20.44	17.35	***149.7***	$31.76
6	26.125	0.25	3	12	114.59	9.55	13.58	6	7	3.08	50.38	14.10	$14.39	$20.44	19.94	***172.1***	$34.83
6	26.125	0.25	3	12	114.59	9.55	13.58	6	9	3.96	65.38	17.11	$17.45	$20.44	22.03	***190.1***	$37.89
6	26.125	0.25	3	12	114.59	9.55	13.58	6	11	4.84	79.00	20.11	$20.51	$20.44	23.74	***204.8***	$40.95
6	26.125	0.25	3	12	114.59	9.55	13.58	6	13	5.72	92.24	23.12	$23.58	$20.44	25.26	218.0	$44.02
6	26.125	0.25	3	18	114.59	6.37	9.11	3	5	0.55	8.85	4.27	$4.36	$20.44	12.85	***74.4***	$24.80
6	26.125	0.25	3	18	114.59	6.37	9.11	3	7	0.77	13.21	5.03	$5.13	$20.44	14.44	***83.6***	$25.57
6	26.125	0.25	3	18	114.59	6.37	9.11	3	9	0.99	17.50	5.78	$5.89	$20.44	15.80	***91.5***	$26.33
6	26.125	0.25	3	18	114.59	6.37	9.11	3	11	1.21	21.76	6.53	$6.66	$20.44	17.02	***98.5***	$27.10
6	26.125	0.25	3	18	114.59	6.37	9.11	3	13	1.43	26.00	7.28	$7.43	$20.44	18.12	***104.9***	$27.87
6	26.125	0.25	3	18	114.59	6.37	9.11	4	5	1.00	15.94	5.73	$5.85	$20.44	15.33	***88.7***	$26.29
6	26.125	0.25	3	18	114.59	6.37	9.11	4	7	1.40	23.71	7.07	$7.21	$20.44	17.53	***101.5***	$27.65
6	26.125	0.25	3	18	114.59	6.37	9.11	4	9	1.80	31.29	8.41	$8.57	$20.44	19.38	***112.2***	$29.01
6	26.125	0.25	3	18	114.59	6.37	9.11	4	11	2.20	38.76	9.74	$9.94	$20.44	21.01	***121.6***	$30.38
6	26.125	0.25	3	18	114.59	6.37	9.11	4	13	2.60	46.06	11.08	$11.30	$20.44	22.46	***130.0***	$31.74
6	26.125	0.25	3	18	114.59	6.37	9.11	5	5	1.55	24.47	7.61	$7.76	$20.44	17.73	***102.6***	$28.20
6	26.125	0.25	3	18	114.59	6.37	9.11	5	7	2.17	36.18	9.69	$9.89	$20.44	20.46	***118.4***	$30.33
6	26.125	0.25	3	18	114.59	6.37	9.11	5	9	2.79	47.50	11.78	$12.02	$20.44	22.73	***131.6***	$32.46
6	26.125	0.25	3	18	114.59	6.37	9.11	5	11	3.41	58.47	13.87	$14.14	$20.44	24.69	***142.9***	$34.58
6	26.125	0.25	3	18	114.59	6.37	9.11	5	13	4.03	68.56	15.95	$16.27	$20.44	26.34	***152.5***	$36.71
6	26.125	0.25	3	18	114.59	6.37	9.11	6	5	2.20	34.29	9.90	$10.10	$20.44	20.05	***116.1***	$30.54
6	26.125	0.25	3	18	114.59	6.37	9.11	6	7	3.08	50.38	12.91	$13.17	$20.44	23.26	***134.7***	$33.60
6	26.125	0.25	3	18	114.59	6.37	9.11	6	9	3.96	65.38	15.91	$16.23	$20.44	25.84	***149.6***	$36.67
6	26.125	0.25	3	18	114.59	6.37	9.11	6	11	4.84	79.00	18.92	$19.29	$20.44	27.93	***161.7***	$39.73
6	26.125	0.25	3	18	114.59	6.37	9.11	6	13	5.72	92.24	21.92	$22.36	$20.44	29.81	***172.5***	$42.80

White Text - inadequate temperature and shrinkage steel
Italic Text - inadequate structural capacity
Highlighted Row - good design – valid for use

1 in. = 25.4 mm
1 ft = 0.3048 m
1 kip = 4.448 kN

Table A-1 (continued). Interior Section Strength and Cost Calculations for All Configurations

Top Width (in)	Base Width (in)	Concrete Volume (yd^3 / ft)	Stirrups					Longitudinal Steel				Weight of Steel (lb / ft)	Cost of Steel ($ / ft)	Cost of Concrete ($ / ft)	Yield Line Calculations		Total Cost ($ / ft)
			Bar #	Spacing (in)	Length (in)	Length / ft (ft / ft)	M_C (k-ft / ft)	Bar #	Quantity	A_s (in^2)	M_w (k-ft / ft)				L_{CR} (ft)	ΦR_w (kips)	
6	26.125	0.25	3	24	114.59	4.77	6.83	3	5	0.55	8.85	3.68	$3.75	$20.44	13.96	***60.6***	$24.19
6	26.125	0.25	3	24	114.59	4.77	6.83	3	7	0.77	13.21	4.43	$4.52	$20.44	15.84	***68.8***	$24.95
6	26.125	0.25	3	24	114.59	4.77	6.83	3	9	0.99	17.50	5.18	$5.28	$20.44	17.43	***75.7***	$25.72
6	26.125	0.25	3	24	114.59	4.77	6.83	3	11	1.21	21.76	5.93	$6.05	$20.44	18.85	***81.8***	$26.49
6	26.125	0.25	3	24	114.59	4.77	6.83	3	13	1.43	26.00	6.68	$6.82	$20.44	20.14	***87.4***	$27.26
6	26.125	0.25	3	24	114.59	4.77	6.83	4	5	1.00	15.94	5.14	$5.24	$20.44	16.88	***73.3***	$25.68
6	26.125	0.25	3	24	114.59	4.77	6.83	4	7	1.40	23.71	6.47	$6.60	$20.44	19.45	***84.4***	$27.04
6	26.125	0.25	3	24	114.59	4.77	6.83	4	9	1.80	31.29	7.81	$7.96	$20.44	21.61	***93.8***	$28.40
6	26.125	0.25	3	24	114.59	4.77	6.83	4	11	2.20	38.76	9.14	$9.33	$20.44	23.50	***102.0***	$29.77
6	26.125	0.25	3	24	114.59	4.77	6.83	4	13	2.60	46.06	10.48	$10.69	$20.44	25.19	***109.3***	$31.13
6	26.125	0.25	3	24	114.59	4.77	6.83	5	5	1.55	24.47	7.01	$7.15	$20.44	19.68	***85.5***	$27.59
6	26.125	0.25	3	24	114.59	4.77	6.83	5	7	2.17	36.18	9.10	$9.28	$20.44	22.87	***99.3***	$29.72
6	26.125	0.25	3	24	114.59	4.77	6.83	5	9	2.79	47.50	11.18	$11.41	$20.44	25.50	***110.7***	$31.84
6	26.125	0.25	3	24	114.59	4.77	6.83	5	11	3.41	58.47	13.27	$13.53	$20.44	27.78	***120.6***	$33.97
6	26.125	0.25	3	24	114.59	4.77	6.83	5	13	4.03	68.56	15.35	$15.66	$20.44	29.70	***128.9***	$36.10
6	26.125	0.25	3	24	114.59	4.77	6.83	6	5	2.20	34.29	9.31	$9.49	$20.44	22.39	***97.2***	$29.93
6	26.125	0.25	3	24	114.59	4.77	6.83	6	7	3.08	50.38	12.31	$12.56	$20.44	26.12	***113.4***	$32.99
6	26.125	0.25	3	24	114.59	4.77	6.83	6	9	3.96	65.38	15.31	$15.62	$20.44	29.11	***126.4***	$36.06
6	26.125	0.25	3	24	114.59	4.77	6.83	6	11	4.84	79.00	18.32	$18.68	$20.44	31.54	***136.9***	$39.12
6	26.125	0.25	3	24	114.59	4.77	6.83	6	13	5.72	92.24	21.32	$21.75	$20.44	33.71	***146.4***	$42.19
6	26.125	0.25	3	30	114.59	3.82	5.47	3	5	0.55	8.85	3.32	$3.38	$20.44	14.95	***51.9***	$23.82
6	26.125	0.25	3	30	114.59	3.82	5.47	3	7	0.77	13.21	4.07	$4.15	$20.44	17.08	***59.3***	$24.59
6	26.125	0.25	3	30	114.59	3.82	5.47	3	9	0.99	17.50	4.82	$4.92	$20.44	18.89	***65.6***	$25.36
6	26.125	0.25	3	30	114.59	3.82	5.47	3	11	1.21	21.76	5.57	$5.68	$20.44	20.48	***71.1***	$26.12
6	26.125	0.25	3	30	114.59	3.82	5.47	3	13	1.43	26.00	6.32	$6.45	$20.44	21.93	***76.2***	$26.89
6	26.125	0.25	3	30	114.59	3.82	5.47	4	5	1.00	15.94	4.78	$4.87	$20.44	18.26	***63.4***	$25.31
6	26.125	0.25	3	30	114.59	3.82	5.47	4	7	1.40	23.71	6.11	$6.23	$20.44	21.16	***73.5***	$26.67
6	26.125	0.25	3	30	114.59	3.82	5.47	4	9	1.80	31.29	7.45	$7.60	$20.44	23.59	***81.9***	$28.04
6	26.125	0.25	3	30	114.59	3.82	5.47	4	11	2.20	38.76	8.78	$8.96	$20.44	25.71	***89.3***	$29.40
6	26.125	0.25	3	30	114.59	3.82	5.47	4	13	2.60	46.06	10.12	$10.32	$20.44	27.60	***95.9***	$30.76
6	26.125	0.25	3	30	114.59	3.82	5.47	5	5	1.55	24.47	6.65	$6.78	$20.44	21.42	***74.4***	$27.22
6	26.125	0.25	3	30	114.59	3.82	5.47	5	7	2.17	36.18	8.74	$8.91	$20.44	25.00	***86.8***	$29.35
6	26.125	0.25	3	30	114.59	3.82	5.47	5	9	2.79	47.50	10.82	$11.04	$20.44	27.96	***97.1***	$31.48
6	26.125	0.25	3	30	114.59	3.82	5.47	5	11	3.41	58.47	12.91	$13.17	$20.44	30.51	***106.0***	$33.61
6	26.125	0.25	3	30	114.59	3.82	5.47	5	13	4.03	68.56	15.00	$15.30	$20.44	32.66	***113.4***	$35.73
6	26.125	0.25	3	30	114.59	3.82	5.47	6	5	2.20	34.29	8.95	$9.13	$20.44	24.47	***85.0***	$29.56
6	26.125	0.25	3	30	114.59	3.82	5.47	6	7	3.08	50.38	11.95	$12.19	$20.44	28.66	***99.5***	$32.63
6	26.125	0.25	3	30	114.59	3.82	5.47	6	9	3.96	65.38	14.95	$15.25	$20.44	32.00	***111.1***	$35.69
6	26.125	0.25	3	30	114.59	3.82	5.47	6	11	4.84	79.00	17.96	$18.32	$20.44	34.73	***120.6***	$38.76
6	26.125	0.25	3	30	114.59	3.82	5.47	6	13	5.72	92.24	20.96	$21.38	$20.44	37.16	***129.1***	$41.82

White Text - inadequate temperature and shrinkage steel
Italic Text - inadequate structural capacity
Highlighted Row - good design – valid for use

1 in. = 25.4 mm
1 ft = 0.3048 m
1 kip = 4.448 kN

Table A-1 (continued). Interior Section Strength and Cost Calculations for All Configurations

Top Width (in)	Base Width (in)	Concrete Volume (yd^3 / ft)	Stirrups					Longitudinal Steel				Weight of Steel (lb / ft)	Cost of Steel ($ / ft)	Cost of Concrete ($ / ft)	Yield Line Calculations		Total Cost ($ / ft)
			Bar #	Spacing (in)	Length (in)	Length / ft (ft / ft)	M_C (k-ft / ft)	Bar #	Quantity	A_s (in^2)	M_w (k-ft / ft)				L_{CR} (ft)	ΦR_w (kips)	
6	26.125	0.25	3	36	114.59	3.18	4.56	3	5	0.55	8.85	3.08	$3.14	$20.44	15.87	***45.9***	$23.58
6	26.125	0.25	3	36	114.59	3.18	4.56	3	7	0.77	13.21	3.83	$3.91	$20.44	18.22	***52.7***	$24.34
6	26.125	0.25	3	36	114.59	3.18	4.56	3	9	0.99	17.50	4.58	$4.67	$20.44	20.21	***58.5***	$25.11
6	26.125	0.25	3	36	114.59	3.18	4.56	3	11	1.21	21.76	5.33	$5.44	$20.44	21.97	***63.6***	$25.88
6	26.125	0.25	3	36	114.59	3.18	4.56	3	13	1.43	26.00	6.08	$6.21	$20.44	23.56	***68.2***	$26.65
6	26.125	0.25	3	36	114.59	3.18	4.56	4	5	1.00	15.94	4.54	$4.63	$20.44	19.52	***56.5***	$25.07
6	26.125	0.25	3	36	114.59	3.18	4.56	4	7	1.40	23.71	5.87	$5.99	$20.44	22.71	***65.7***	$26.43
6	26.125	0.25	3	36	114.59	3.18	4.56	4	9	1.80	31.29	7.21	$7.35	$20.44	25.38	***73.5***	$27.79
6	26.125	0.25	3	36	114.59	3.18	4.56	4	11	2.20	38.76	8.54	$8.72	$20.44	27.72	***80.2***	$29.15
6	26.125	0.25	3	36	114.59	3.18	4.56	4	13	2.60	46.06	9.88	$10.08	$20.44	29.79	***86.2***	$30.52
6	26.125	0.25	3	36	114.59	3.18	4.56	5	5	1.55	24.47	6.41	$6.54	$20.44	23.00	***66.6***	$26.98
6	26.125	0.25	3	36	114.59	3.18	4.56	5	7	2.17	36.18	8.50	$8.67	$20.44	26.93	***78.0***	$29.11
6	26.125	0.25	3	36	114.59	3.18	4.56	5	9	2.79	47.50	10.58	$10.80	$20.44	30.18	***87.4***	$31.23
6	26.125	0.25	3	36	114.59	3.18	4.56	5	11	3.41	58.47	12.67	$12.92	$20.44	32.99	***95.5***	$33.36
6	26.125	0.25	3	36	114.59	3.18	4.56	5	13	4.03	68.56	14.76	$15.05	$20.44	35.35	***102.3***	$35.49
6	26.125	0.25	3	36	114.59	3.18	4.56	6	5	2.20	34.29	8.71	$8.88	$20.44	26.35	***76.3***	$29.32
6	26.125	0.25	3	36	114.59	3.18	4.56	6	7	3.08	50.38	11.71	$11.94	$20.44	30.95	***89.6***	$32.38
6	26.125	0.25	3	36	114.59	3.18	4.56	6	9	3.96	65.38	14.71	$15.01	$20.44	34.62	***100.2***	$35.45
6	26.125	0.25	3	36	114.59	3.18	4.56	6	11	4.84	79.00	17.72	$18.07	$20.44	37.61	***108.9***	$38.51
6	26.125	0.25	3	36	114.59	3.18	4.56	6	13	5.72	92.24	20.72	$21.14	$20.44	40.28	***116.6***	$41.58
6	26.125	0.25	4	12	115.66	9.64	24.42	3	5	0.55	8.85	8.32	$8.48	$20.44	10.27	***159.3***	$28.92
6	26.125	0.25	4	12	115.66	9.64	24.42	3	7	0.77	13.21	9.07	$9.25	$20.44	11.12	***172.5***	$29.69
6	26.125	0.25	4	12	115.66	9.64	24.42	3	9	0.99	17.50	9.82	$10.02	$20.44	11.88	***184.2***	$30.46
6	26.125	0.25	4	12	115.66	9.64	24.42	3	11	1.21	21.76	10.57	$10.79	$20.44	12.56	***194.8***	$31.22
6	26.125	0.25	4	12	115.66	9.64	24.42	3	13	1.43	26.00	11.33	$11.55	$20.44	13.19	***204.5***	$31.99
6	26.125	0.25	4	12	115.66	9.64	24.42	4	5	1.00	15.94	9.78	$9.97	$20.44	11.61	***180.1***	$30.41
6	26.125	0.25	4	12	115.66	9.64	24.42	4	7	1.40	23.71	11.11	$11.34	$20.44	12.85	***199.4***	$31.78
6	26.125	0.25	4	12	115.66	9.64	24.42	4	9	1.80	31.29	12.45	$12.70	$20.44	13.92	215.8	$33.14
6	26.125	0.25	4	12	115.66	9.64	24.42	4	11	2.20	38.76	13.79	$14.06	$20.44	14.86	230.5	$34.50
6	26.125	0.25	4	12	115.66	9.64	24.42	4	13	2.60	46.06	15.12	$15.42	$20.44	15.71	243.7	$35.86
6	26.125	0.25	4	12	115.66	9.64	24.42	5	5	1.55	24.47	11.65	$11.89	$20.44	12.96	***201.1***	$32.33
6	26.125	0.25	4	12	115.66	9.64	24.42	5	7	2.17	36.18	13.74	$14.01	$20.44	14.54	225.6	$34.45
6	26.125	0.25	4	12	115.66	9.64	24.42	5	9	2.79	47.50	15.83	$16.14	$20.44	15.87	246.2	$36.58
6	26.125	0.25	4	12	115.66	9.64	24.42	5	11	3.41	58.47	17.91	$18.27	$20.44	17.03	264.2	$38.71
6	26.125	0.25	4	12	115.66	9.64	24.42	5	13	4.03	68.56	20.00	$20.40	$20.44	18.01	279.4	$40.84
6	26.125	0.25	4	12	115.66	9.64	24.42	6	5	2.20	34.29	13.95	$14.23	$20.44	14.31	221.9	$34.67
6	26.125	0.25	4	12	115.66	9.64	24.42	6	7	3.08	50.38	16.95	$17.29	$20.44	16.19	251.1	$37.73
6	26.125	0.25	4	12	115.66	9.64	24.42	6	9	3.96	65.38	19.96	$20.36	$20.44	17.71	274.7	$40.79
6	26.125	0.25	4	12	115.66	9.64	24.42	6	11	4.84	79.00	22.96	$23.42	$20.44	18.96	294.1	$43.86
6	26.125	0.25	4	12	115.66	9.64	24.42	6	13	5.72	92.24	25.96	$26.48	$20.44	20.08	311.5	$46.92

White Text - inadequate temperature and shrinkage steel
Italic Text - inadequate structural capacity
Highlighted Row - good design – valid for use

1 in. = 25.4 mm
1 ft = 0.3048 m
1 kip = 4.448 kN

Table A-1 (continued). Interior Section Strength and Cost Calculations for All Configurations

Top Width (in)	Base Width (in)	Concrete Volume (yd^3 / ft)	Stirrups					Longitudinal Steel				Weight of Steel (lb / ft)	Cost of Steel ($ / ft)	Cost of Concrete ($ / ft)	Yield Line Calculations		Total Cost ($ / ft)
			Bar #	Spacing (in)	Length (in)	Length / ft (ft / ft)	M_C (k-ft / ft)	Bar #	Quantity	A_s (in^2)	M_w (k-ft / ft)				L_{CR} (ft)	ΦR_w (kips)	
6	26.125	0.25	4	18	115.66	6.43	16.39	3	5	0.55	8.85	6.17	$6.30	$20.44	11.12	***115.8***	$26.73
6	26.125	0.25	4	18	115.66	6.43	16.39	3	7	0.77	13.21	6.92	$7.06	$20.44	12.23	***127.3***	$27.50
6	26.125	0.25	4	18	115.66	6.43	16.39	3	9	0.99	17.50	7.68	$7.83	$20.44	13.20	***137.4***	$28.27
6	26.125	0.25	4	18	115.66	6.43	16.39	3	11	1.21	21.76	8.43	$8.60	$20.44	14.06	***146.4***	$29.04
6	26.125	0.25	4	18	115.66	6.43	16.39	3	13	1.43	26.00	9.18	$9.36	$20.44	14.86	***154.7***	$29.80
6	26.125	0.25	4	18	115.66	6.43	16.39	4	5	1.00	15.94	7.63	$7.78	$20.44	12.86	***133.9***	$28.22
6	26.125	0.25	4	18	115.66	6.43	16.39	4	7	1.40	23.71	8.97	$9.15	$20.44	14.44	***150.3***	$29.59
6	26.125	0.25	4	18	115.66	6.43	16.39	4	9	1.80	31.29	10.30	$10.51	$20.44	15.77	***164.2***	$30.95
6	26.125	0.25	4	18	115.66	6.43	16.39	4	11	2.20	38.76	11.64	$11.87	$20.44	16.96	***176.6***	$32.31
6	26.125	0.25	4	18	115.66	6.43	16.39	4	13	2.60	46.06	12.98	$13.24	$20.44	18.02	***187.6***	$33.67
6	26.125	0.25	4	18	115.66	6.43	16.39	5	5	1.55	24.47	9.51	$9.70	$20.44	14.58	***151.8***	$30.14
6	26.125	0.25	4	18	115.66	6.43	16.39	5	7	2.17	36.18	11.59	$11.82	$20.44	16.56	***172.4***	$32.26
6	26.125	0.25	4	18	115.66	6.43	16.39	5	9	2.79	47.50	13.68	$13.95	$20.44	18.22	***189.7***	$34.39
6	26.125	0.25	4	18	115.66	6.43	16.39	5	11	3.41	58.47	15.77	$16.08	$20.44	19.66	***204.7***	$36.52
6	26.125	0.25	4	18	115.66	6.43	16.39	5	13	4.03	68.56	17.85	$18.21	$20.44	20.87	217.3	$38.65
6	26.125	0.25	4	18	115.66	6.43	16.39	6	5	2.20	34.29	11.80	$12.04	$20.44	16.26	***169.3***	$32.48
6	26.125	0.25	4	18	115.66	6.43	16.39	6	7	3.08	50.38	14.81	$15.10	$20.44	18.61	***193.8***	$35.54
6	26.125	0.25	4	18	115.66	6.43	16.39	6	9	3.96	65.38	17.81	$18.17	$20.44	20.50	***213.4***	$38.61
6	26.125	0.25	4	18	115.66	6.43	16.39	6	11	4.84	79.00	20.81	$21.23	$20.44	22.04	229.5	$41.67
6	26.125	0.25	4	18	115.66	6.43	16.39	6	13	5.72	92.24	23.82	$24.29	$20.44	23.43	243.9	$44.73
6	26.125	0.25	4	24	115.66	4.82	12.33	3	5	0.55	8.85	5.10	$5.20	$20.44	11.88	***93.1***	$25.64
6	26.125	0.25	4	24	115.66	4.82	12.33	3	7	0.77	13.21	5.85	$5.97	$20.44	13.21	***103.5***	$26.41
6	26.125	0.25	4	24	115.66	4.82	12.33	3	9	0.99	17.50	6.60	$6.74	$20.44	14.35	***112.4***	$27.17
6	26.125	0.25	4	24	115.66	4.82	12.33	3	11	1.21	21.76	7.36	$7.50	$20.44	15.37	***120.4***	$27.94
6	26.125	0.25	4	24	115.66	4.82	12.33	3	13	1.43	26.00	8.11	$8.27	$20.44	16.30	***127.7***	$28.71
6	26.125	0.25	4	24	115.66	4.82	12.33	4	5	1.00	15.94	6.56	$6.69	$20.44	13.95	***109.3***	$27.13
6	26.125	0.25	4	24	115.66	4.82	12.33	4	7	1.40	23.71	7.90	$8.05	$20.44	15.81	***123.9***	$28.49
6	26.125	0.25	4	24	115.66	4.82	12.33	4	9	1.80	31.29	9.23	$9.42	$20.44	17.38	***136.2***	$29.85
6	26.125	0.25	4	24	115.66	4.82	12.33	4	11	2.20	38.76	10.57	$10.78	$20.44	18.76	***147.0***	$31.22
6	26.125	0.25	4	24	115.66	4.82	12.33	4	13	2.60	46.06	11.90	$12.14	$20.44	19.99	***156.7***	$32.58
6	26.125	0.25	4	24	115.66	4.82	12.33	5	5	1.55	24.47	8.43	$8.60	$20.44	15.98	***125.2***	$29.04
6	26.125	0.25	4	24	115.66	4.82	12.33	5	7	2.17	36.18	10.52	$10.73	$20.44	18.30	***143.4***	$31.17
6	26.125	0.25	4	24	115.66	4.82	12.33	5	9	2.79	47.50	12.61	$12.86	$20.44	20.23	***158.5***	$33.30
6	26.125	0.25	4	24	115.66	4.82	12.33	5	11	3.41	58.47	14.69	$14.99	$20.44	21.90	***171.6***	$35.42
6	26.125	0.25	4	24	115.66	4.82	12.33	5	13	4.03	68.56	16.78	$17.11	$20.44	23.31	***182.7***	$37.55
6	26.125	0.25	4	24	115.66	4.82	12.33	6	5	2.20	34.29	10.73	$10.94	$20.44	17.95	***140.6***	$31.38
6	26.125	0.25	4	24	115.66	4.82	12.33	6	7	3.08	50.38	13.73	$14.01	$20.44	20.68	***162.1***	$34.45
6	26.125	0.25	4	24	115.66	4.82	12.33	6	9	3.96	65.38	16.74	$17.07	$20.44	22.88	***179.3***	$37.51
6	26.125	0.25	4	24	115.66	4.82	12.33	6	11	4.84	79.00	19.74	$20.14	$20.44	24.67	***193.3***	$40.57
6	26.125	0.25	4	24	115.66	4.82	12.33	6	13	5.72	92.24	22.75	$23.20	$20.44	26.28	***205.9***	$43.64

White Text - inadequate temperature and shrinkage steel
Italic Text - inadequate structural capacity
Highlighted Row - good design – valid for use

1 in. = 25.4 mm
1 ft = 0.3048 m
1 kip = 4.448 kN

Table A-1 (continued). Interior Section Strength and Cost Calculations for All Configurations

Top Width (in)	Base Width (in)	Concrete Volume (yd^3 / ft)	Stirrups					Longitudinal Steel				Weight of Steel (lb / ft)	Cost of Steel ($ / ft)	Cost of Concrete ($ / ft)	Yield Line Calculations		Total Cost ($ / ft)
			Bar #	Spacing (in)	Length (in)	Length / ft (ft / ft)	M_C (k-ft / ft)	Bar #	Quantity	A_s (in^2)	M_w (k-ft / ft)				L_{CR} (ft)	ΦR_w (kips)	
6	26.125	0.25	4	30	115.66	3.86	9.90	3	5	0.55	8.85	4.46	$4.54	$20.44	12.57	***79.1***	$24.98
6	26.125	0.25	4	30	115.66	3.86	9.90	3	7	0.77	13.21	5.21	$5.31	$20.44	14.08	***88.6***	$25.75
6	26.125	0.25	4	30	115.66	3.86	9.90	3	9	0.99	17.50	5.96	$6.08	$20.44	15.38	***96.7***	$26.52
6	26.125	0.25	4	30	115.66	3.86	9.90	3	11	1.21	21.76	6.71	$6.85	$20.44	16.54	***104.0***	$27.28
6	26.125	0.25	4	30	115.66	3.86	9.90	3	13	1.43	26.00	7.46	$7.61	$20.44	17.59	***110.6***	$28.05
6	26.125	0.25	4	30	115.66	3.86	9.90	4	5	1.00	15.94	5.92	$6.03	$20.44	14.93	***93.9***	$26.47
6	26.125	0.25	4	30	115.66	3.86	9.90	4	7	1.40	23.71	7.25	$7.40	$20.44	17.03	***107.1***	$27.84
6	26.125	0.25	4	30	115.66	3.86	9.90	4	9	1.80	31.29	8.59	$8.76	$20.44	18.80	***118.2***	$29.20
6	26.125	0.25	4	30	115.66	3.86	9.90	4	11	2.20	38.76	9.92	$10.12	$20.44	20.35	***128.0***	$30.56
6	26.125	0.25	4	30	115.66	3.86	9.90	4	13	2.60	46.06	11.26	$11.48	$20.44	21.74	***136.7***	$31.92
6	26.125	0.25	4	30	115.66	3.86	9.90	5	5	1.55	24.47	7.79	$7.95	$20.44	17.22	***108.3***	$28.39
6	26.125	0.25	4	30	115.66	3.86	9.90	5	7	2.17	36.18	9.88	$10.07	$20.44	19.83	***124.7***	$30.51
6	26.125	0.25	4	30	115.66	3.86	9.90	5	9	2.79	47.50	11.96	$12.20	$20.44	22.00	***138.4***	$32.64
6	26.125	0.25	4	30	115.66	3.86	9.90	5	11	3.41	58.47	14.05	$14.33	$20.44	23.88	***150.2***	$34.77
6	26.125	0.25	4	30	115.66	3.86	9.90	5	13	4.03	68.56	16.13	$16.46	$20.44	25.47	***160.2***	$36.90
6	26.125	0.25	4	30	115.66	3.86	9.90	6	5	2.20	34.29	10.09	$10.29	$20.44	19.44	***122.3***	$30.73
6	26.125	0.25	4	30	115.66	3.86	9.90	6	7	3.08	50.38	13.09	$13.35	$20.44	22.52	***141.6***	$33.79
6	26.125	0.25	4	30	115.66	3.86	9.90	6	9	3.96	65.38	16.09	$16.42	$20.44	24.98	***157.1***	$36.85
6	26.125	0.25	4	30	115.66	3.86	9.90	6	11	4.84	79.00	19.10	$19.48	$20.44	26.99	***169.7***	$39.92
6	26.125	0.25	4	30	115.66	3.86	9.90	6	13	5.72	92.24	22.10	$22.54	$20.44	28.79	***181.0***	$42.98
6	26.125	0.25	4	36	115.66	3.21	8.28	3	5	0.55	8.85	4.03	$4.11	$20.44	13.20	***69.4***	$24.55
6	26.125	0.25	4	36	115.66	3.21	8.28	3	7	0.77	13.21	4.78	$4.87	$20.44	14.88	***78.3***	$25.31
6	26.125	0.25	4	36	115.66	3.21	8.28	3	9	0.99	17.50	5.53	$5.64	$20.44	16.32	***85.8***	$26.08
6	26.125	0.25	4	36	115.66	3.21	8.28	3	11	1.21	21.76	6.28	$6.41	$20.44	17.60	***92.5***	$26.85
6	26.125	0.25	4	36	115.66	3.21	8.28	3	13	1.43	26.00	7.03	$7.17	$20.44	18.76	***98.6***	$27.61
6	26.125	0.25	4	36	115.66	3.21	8.28	4	5	1.00	15.94	5.49	$5.60	$20.44	15.82	***83.2***	$26.03
6	26.125	0.25	4	36	115.66	3.21	8.28	4	7	1.40	23.71	6.82	$6.96	$20.44	18.14	***95.4***	$27.40
6	26.125	0.25	4	36	115.66	3.21	8.28	4	9	1.80	31.29	8.16	$8.32	$20.44	20.09	***105.6***	$28.76
6	26.125	0.25	4	36	115.66	3.21	8.28	4	11	2.20	38.76	9.49	$9.68	$20.44	21.80	***114.6***	$30.12
6	26.125	0.25	4	36	115.66	3.21	8.28	4	13	2.60	46.06	10.83	$11.05	$20.44	23.32	***122.6***	$31.49
6	26.125	0.25	4	36	115.66	3.21	8.28	5	5	1.55	24.47	7.36	$7.51	$20.44	18.35	***96.5***	$27.95
6	26.125	0.25	4	36	115.66	3.21	8.28	5	7	2.17	36.18	9.45	$9.64	$20.44	21.22	***111.6***	$30.08
6	26.125	0.25	4	36	115.66	3.21	8.28	5	9	2.79	47.50	11.53	$11.76	$20.44	23.61	***124.2***	$32.20
6	26.125	0.25	4	36	115.66	3.21	8.28	5	11	3.41	58.47	13.62	$13.89	$20.44	25.67	***135.0***	$34.33
6	26.125	0.25	4	36	115.66	3.21	8.28	5	13	4.03	68.56	15.71	$16.02	$20.44	27.41	***144.1***	$36.46
6	26.125	0.25	4	36	115.66	3.21	8.28	6	5	2.20	34.29	9.66	$9.85	$20.44	20.79	***109.4***	$30.29
6	26.125	0.25	4	36	115.66	3.21	8.28	6	7	3.08	50.38	12.66	$12.91	$20.44	24.17	***127.1***	$33.35
6	26.125	0.25	4	36	115.66	3.21	8.28	6	9	3.96	65.38	15.66	$15.98	$20.44	26.87	***141.3***	$36.42
6	26.125	0.25	4	36	115.66	3.21	8.28	6	11	4.84	79.00	18.67	$19.04	$20.44	29.08	***152.9***	$39.48
6	26.125	0.25	4	36	115.66	3.21	8.28	6	13	5.72	92.24	21.67	$22.11	$20.44	31.05	***163.3***	$42.54

White Text - inadequate temperature and shrinkage steel
Italic Text - inadequate structural capacity
Highlighted Row - good design – valid for use

1 in. = 25.4 mm
1 ft = 0.3048 m
1 kip = 4.448 kN

Table A-1 (continued). Interior Section Strength and Cost Calculations for All Configurations

Top Width (in)	Base Width (in)	Concrete Volume (yd^3 / ft)	Stirrups					Longitudinal Steel				Weight of Steel (lb / ft)	Cost of Steel ($ / ft)	Cost of Concrete ($ / ft)	Yield Line Calculations		Total Cost ($ / ft)
			Bar #	Spacing (in)	Length (in)	Length / ft (ft / ft)	M_C (k-ft / ft)	Bar #	Quantity	A_s (in^2)	M_w (k-ft / ft)				L_{CR} (ft)	ΦR_w (kips)	
6	26.125	0.25	5	12	117.10	9.76	37.33	3	5	0.55	8.85	12.06	$12.30	$20.44	9.59	227.4	$32.74
6	26.125	0.25	5	12	117.10	9.76	37.33	3	7	0.77	13.21	12.81	$13.07	$20.44	10.22	242.4	$33.51
6	26.125	0.25	5	12	117.10	9.76	37.33	3	9	0.99	17.50	13.56	$13.83	$20.44	10.79	255.9	$34.27
6	26.125	0.25	5	12	117.10	9.76	37.33	3	11	1.21	21.76	14.31	$14.60	$20.44	11.31	268.3	$35.04
6	26.125	0.25	5	12	117.10	9.76	37.33	3	13	1.43	26.00	15.07	$15.37	$20.44	11.79	279.7	$35.81
6	26.125	0.25	5	12	117.10	9.76	37.33	4	5	1.00	15.94	13.52	$13.79	$20.44	10.59	251.2	$34.23
6	26.125	0.25	5	12	117.10	9.76	37.33	4	7	1.40	23.71	14.85	$15.15	$20.44	11.54	273.6	$35.59
6	26.125	0.25	5	12	117.10	9.76	37.33	4	9	1.80	31.29	16.19	$16.51	$20.44	12.36	293.1	$36.95
6	26.125	0.25	5	12	117.10	9.76	37.33	4	11	2.20	38.76	17.53	$17.88	$20.44	13.09	310.5	$38.32
6	26.125	0.25	5	12	117.10	9.76	37.33	4	13	2.60	46.06	18.86	$19.24	$20.44	13.76	326.3	$39.68
6	26.125	0.25	5	12	117.10	9.76	37.33	5	5	1.55	24.47	15.39	$15.70	$20.44	11.62	275.6	$36.14
6	26.125	0.25	5	12	117.10	9.76	37.33	5	7	2.17	36.18	17.48	$17.83	$20.44	12.84	304.7	$38.27
6	26.125	0.25	5	12	117.10	9.76	37.33	5	9	2.79	47.50	19.57	$19.96	$20.44	13.88	329.3	$40.40
6	26.125	0.25	5	12	117.10	9.76	37.33	5	11	3.41	58.47	21.65	$22.08	$20.44	14.80	351.0	$42.52
6	26.125	0.25	5	12	117.10	9.76	37.33	5	13	4.03	68.56	23.74	$24.21	$20.44	15.57	369.4	$44.65
6	26.125	0.25	5	12	117.10	9.76	37.33	6	5	2.20	34.29	17.69	$18.04	$20.44	12.66	300.3	$38.48
6	26.125	0.25	5	12	117.10	9.76	37.33	6	7	3.08	50.38	20.69	$21.11	$20.44	14.13	335.2	$41.54
6	26.125	0.25	5	12	117.10	9.76	37.33	6	9	3.96	65.38	23.70	$24.17	$20.44	15.33	363.7	$44.61
6	26.125	0.25	5	12	117.10	9.76	37.33	6	11	4.84	79.00	26.70	$27.23	$20.44	16.32	387.2	$47.67
6	26.125	0.25	5	12	117.10	9.76	37.33	6	13	5.72	92.24	29.70	$30.30	$20.44	17.22	408.3	$50.74
6	26.125	0.25	5	18	117.10	6.51	25.22	3	5	0.55	8.85	8.67	$8.84	$20.44	10.21	***163.6***	$29.28
6	26.125	0.25	5	18	117.10	6.51	25.22	3	7	0.77	13.21	9.42	$9.61	$20.44	11.04	***177.0***	$30.04
6	26.125	0.25	5	18	117.10	6.51	25.22	3	9	0.99	17.50	10.17	$10.37	$20.44	11.78	***188.8***	$30.81
6	26.125	0.25	5	18	117.10	6.51	25.22	3	11	1.21	21.76	10.92	$11.14	$20.44	12.45	***199.5***	$31.58
6	26.125	0.25	5	18	117.10	6.51	25.22	3	13	1.43	26.00	11.67	$11.91	$20.44	13.07	***209.4***	$32.35
6	26.125	0.25	5	18	117.10	6.51	25.22	4	5	1.00	15.94	10.13	$10.33	$20.44	11.52	***184.6***	$30.77
6	26.125	0.25	5	18	117.10	6.51	25.22	4	7	1.40	23.71	11.46	$11.69	$20.44	12.74	***204.1***	$32.13
6	26.125	0.25	5	18	117.10	6.51	25.22	4	9	1.80	31.29	12.80	$13.05	$20.44	13.78	220.8	$33.49
6	26.125	0.25	5	18	117.10	6.51	25.22	4	11	2.20	38.76	14.13	$14.42	$20.44	14.71	235.7	$34.86
6	26.125	0.25	5	18	117.10	6.51	25.22	4	13	2.60	46.06	15.47	$15.78	$20.44	15.54	249.1	$36.22
6	26.125	0.25	5	18	117.10	6.51	25.22	5	5	1.55	24.47	12.00	$12.24	$20.44	12.85	***205.9***	$32.68
6	26.125	0.25	5	18	117.10	6.51	25.22	5	7	2.17	36.18	14.09	$14.37	$20.44	14.40	230.7	$34.81
6	26.125	0.25	5	18	117.10	6.51	25.22	5	9	2.79	47.50	16.17	$16.50	$20.44	15.70	251.6	$36.93
6	26.125	0.25	5	18	117.10	6.51	25.22	5	11	3.41	58.47	18.26	$18.62	$20.44	16.84	269.8	$39.06
6	26.125	0.25	5	18	117.10	6.51	25.22	5	13	4.03	68.56	20.34	$20.75	$20.44	17.80	285.3	$41.19
6	26.125	0.25	5	18	117.10	6.51	25.22	6	5	2.20	34.29	14.30	$14.58	$20.44	14.16	227.0	$35.02
6	26.125	0.25	5	18	117.10	6.51	25.22	6	7	3.08	50.38	17.30	$17.65	$20.44	16.01	256.6	$38.08
6	26.125	0.25	5	18	117.10	6.51	25.22	6	9	3.96	65.38	20.30	$20.71	$20.44	17.51	280.5	$41.15
6	26.125	0.25	5	18	117.10	6.51	25.22	6	11	4.84	79.00	23.31	$23.77	$20.44	18.74	300.2	$44.21
6	26.125	0.25	5	18	117.10	6.51	25.22	6	13	5.72	92.24	26.31	$26.84	$20.44	19.84	317.9	$47.28

White Text - inadequate temperature and shrinkage steel
Italic Text - inadequate structural capacity
Highlighted Row - good design – valid for use

1 in. = 25.4 mm
1 ft = 0.3048 m
1 kip = 4.448 kN

Table A-1 (continued). Interior Section Strength and Cost Calculations for All Configurations

Top Width (in)	Base Width (in)	Concrete Volume (yd^3 / ft)	Stirrups					Longitudinal Steel				Weight of Steel (lb / ft)	Cost of Steel ($ / ft)	Cost of Concrete ($ / ft)	Yield Line Calculations		Total Cost ($ / ft)
			Bar #	Spacing (in)	Length (in)	Length / ft (ft / ft)	M_C (k-ft / ft)	Bar #	Quantity	A_s (in^2)	M_w (k-ft / ft)				L_{CR} (ft)	ΦR_w (kips)	
6	26.125	0.25	5	24	117.10	4.88	19.04	3	5	0.55	8.85	6.97	$7.11	$20.44	10.77	***130.3***	$27.55
6	26.125	0.25	5	24	117.10	4.88	19.04	3	7	0.77	13.21	7.72	$7.88	$20.44	11.78	***142.5***	$28.31
6	26.125	0.25	5	24	117.10	4.88	19.04	3	9	0.99	17.50	8.47	$8.64	$20.44	12.66	***153.2***	$29.08
6	26.125	0.25	5	24	117.10	4.88	19.04	3	11	1.21	21.76	9.23	$9.41	$20.44	13.46	***162.8***	$29.85
6	26.125	0.25	5	24	117.10	4.88	19.04	3	13	1.43	26.00	9.98	$10.18	$20.44	14.18	***171.6***	$30.62
6	26.125	0.25	5	24	117.10	4.88	19.04	4	5	1.00	15.94	8.43	$8.60	$20.44	12.35	***149.4***	$29.04
6	26.125	0.25	5	24	117.10	4.88	19.04	4	7	1.40	23.71	9.77	$9.96	$20.44	13.80	***166.9***	$30.40
6	26.125	0.25	5	24	117.10	4.88	19.04	4	9	1.80	31.29	11.10	$11.32	$20.44	15.02	***181.8***	$31.76
6	26.125	0.25	5	24	117.10	4.88	19.04	4	11	2.20	38.76	12.44	$12.69	$20.44	16.11	***194.9***	$33.12
6	26.125	0.25	5	24	117.10	4.88	19.04	4	13	2.60	46.06	13.77	$14.05	$20.44	17.09	***206.7***	$34.49
6	26.125	0.25	5	24	117.10	4.88	19.04	5	5	1.55	24.47	10.30	$10.51	$20.44	13.93	***168.5***	$30.95
6	26.125	0.25	5	24	117.10	4.88	19.04	5	7	2.17	36.18	12.39	$12.64	$20.44	15.75	***190.5***	$33.08
6	26.125	0.25	5	24	117.10	4.88	19.04	5	9	2.79	47.50	14.48	$14.77	$20.44	17.27	***209.0***	$35.20
6	26.125	0.25	5	24	117.10	4.88	19.04	5	11	3.41	58.47	16.56	$16.89	$20.44	18.60	225.0	$37.33
6	26.125	0.25	5	24	117.10	4.88	19.04	5	13	4.03	68.56	18.65	$19.02	$20.44	19.72	238.6	$39.46
6	26.125	0.25	5	24	117.10	4.88	19.04	6	5	2.20	34.29	12.60	$12.85	$20.44	15.47	***187.2***	$33.29
6	26.125	0.25	5	24	117.10	4.88	19.04	6	7	3.08	50.38	15.60	$15.92	$20.44	17.64	***213.3***	$36.35
6	26.125	0.25	5	24	117.10	4.88	19.04	6	9	3.96	65.38	18.61	$18.98	$20.44	19.38	234.4	$39.42
6	26.125	0.25	5	24	117.10	4.88	19.04	6	11	4.84	79.00	21.61	$22.04	$20.44	20.81	251.7	$42.48
6	26.125	0.25	5	24	117.10	4.88	19.04	6	13	5.72	92.24	24.62	$25.11	$20.44	22.09	267.2	$45.55
6	26.125	0.25	5	30	117.10	3.90	15.27	3	5	0.55	8.85	5.95	$6.07	$20.44	11.30	***109.6***	$26.51
6	26.125	0.25	5	30	117.10	3.90	15.27	3	7	0.77	13.21	6.70	$6.84	$20.44	12.46	***120.8***	$27.28
6	26.125	0.25	5	30	117.10	3.90	15.27	3	9	0.99	17.50	7.46	$7.60	$20.44	13.47	***130.6***	$28.04
6	26.125	0.25	5	30	117.10	3.90	15.27	3	11	1.21	21.76	8.21	$8.37	$20.44	14.37	***139.4***	$28.81
6	26.125	0.25	5	30	117.10	3.90	15.27	3	13	1.43	26.00	8.96	$9.14	$20.44	15.20	***147.4***	$29.58
6	26.125	0.25	5	30	117.10	3.90	15.27	4	5	1.00	15.94	7.41	$7.56	$20.44	13.11	***127.2***	$28.00
6	26.125	0.25	5	30	117.10	3.90	15.27	4	7	1.40	23.71	8.75	$8.92	$20.44	14.76	***143.1***	$29.36
6	26.125	0.25	5	30	117.10	3.90	15.27	4	9	1.80	31.29	10.08	$10.28	$20.44	16.15	***156.6***	$30.72
6	26.125	0.25	5	30	117.10	3.90	15.27	4	11	2.20	38.76	11.42	$11.65	$20.44	17.38	***168.6***	$32.09
6	26.125	0.25	5	30	117.10	3.90	15.27	4	13	2.60	46.06	12.76	$13.01	$20.44	18.48	***179.3***	$33.45
6	26.125	0.25	5	30	117.10	3.90	15.27	5	5	1.55	24.47	9.29	$9.47	$20.44	14.91	***144.6***	$29.91
6	26.125	0.25	5	30	117.10	3.90	15.27	5	7	2.17	36.18	11.37	$11.60	$20.44	16.97	***164.6***	$32.04
6	26.125	0.25	5	30	117.10	3.90	15.27	5	9	2.79	47.50	13.46	$13.73	$20.44	18.69	***181.3***	$34.17
6	26.125	0.25	5	30	117.10	3.90	15.27	5	11	3.41	58.47	15.54	$15.86	$20.44	20.19	***195.8***	$36.29
6	26.125	0.25	5	30	117.10	3.90	15.27	5	13	4.03	68.56	17.63	$17.98	$20.44	21.45	***208.0***	$38.42
6	26.125	0.25	5	30	117.10	3.90	15.27	6	5	2.20	34.29	11.58	$11.81	$20.44	16.66	***161.6***	$32.25
6	26.125	0.25	5	30	117.10	3.90	15.27	6	7	3.08	50.38	14.59	$14.88	$20.44	19.10	***185.2***	$35.32
6	26.125	0.25	5	30	117.10	3.90	15.27	6	9	3.96	65.38	17.59	$17.94	$20.44	21.06	***204.3***	$38.38
6	26.125	0.25	5	30	117.10	3.90	15.27	6	11	4.84	79.00	20.59	$21.01	$20.44	22.66	219.8	$41.44
6	26.125	0.25	5	30	117.10	3.90	15.27	6	13	5.72	92.24	23.60	$24.07	$20.44	24.10	233.7	$44.51

White Text - inadequate temperature and shrinkage steel
Italic Text - inadequate structural capacity
Highlighted Row - good design – valid for use

1 in. = 25.4 mm
1 ft = 0.3048 m
1 kip = 4.448 kN

Table A-1 (continued). Interior Section Strength and Cost Calculations for All Configurations

Top Width (in)	Base Width (in)	Concrete Volume (yd^3 / ft)	Stirrups					Longitudinal Steel				Weight of Steel (lb / ft)	Cost of Steel ($ / ft)	Cost of Concrete ($ / ft)	Yield Line Calculations		Total Cost ($ / ft)
			Bar #	Spacing (in)	Length (in)	Length / ft (ft / ft)	M_C (k-ft / ft)	Bar #	Quantity	A_s (in^2)	M_w (k-ft / ft)				L_{CR} (ft)	ΦR_w (kips)	
6	26.125	0.25	5	36	117.10	3.25	12.75	3	5	0.55	8.85	5.27	$5.38	$20.44	11.78	***95.5***	$25.82
6	26.125	0.25	5	36	117.10	3.25	12.75	3	7	0.77	13.21	6.02	$6.15	$20.44	13.08	***106.0***	$26.58
6	26.125	0.25	5	36	117.10	3.25	12.75	3	9	0.99	17.50	6.78	$6.91	$20.44	14.21	***115.1***	$27.35
6	26.125	0.25	5	36	117.10	3.25	12.75	3	11	1.21	21.76	7.53	$7.68	$20.44	15.21	***123.2***	$28.12
6	26.125	0.25	5	36	117.10	3.25	12.75	3	13	1.43	26.00	8.28	$8.45	$20.44	16.12	***130.6***	$28.89
6	26.125	0.25	5	36	117.10	3.25	12.75	4	5	1.00	15.94	6.73	$6.87	$20.44	13.81	***111.9***	$27.31
6	26.125	0.25	5	36	117.10	3.25	12.75	4	7	1.40	23.71	8.07	$8.23	$20.44	15.64	***126.7***	$28.67
6	26.125	0.25	5	36	117.10	3.25	12.75	4	9	1.80	31.29	9.40	$9.59	$20.44	17.18	***139.1***	$30.03
6	26.125	0.25	5	36	117.10	3.25	12.75	4	11	2.20	38.76	10.74	$10.96	$20.44	18.53	***150.1***	$31.39
6	26.125	0.25	5	36	117.10	3.25	12.75	4	13	2.60	46.06	12.08	$12.32	$20.44	19.75	***160.0***	$32.76
6	26.125	0.25	5	36	117.10	3.25	12.75	5	5	1.55	24.47	8.61	$8.78	$20.44	15.80	***128.0***	$29.22
6	26.125	0.25	5	36	117.10	3.25	12.75	5	7	2.17	36.18	10.69	$10.91	$20.44	18.08	***146.4***	$31.35
6	26.125	0.25	5	36	117.10	3.25	12.75	5	9	2.79	47.50	12.78	$13.04	$20.44	19.98	***161.8***	$33.47
6	26.125	0.25	5	36	117.10	3.25	12.75	5	11	3.41	58.47	14.87	$15.16	$20.44	21.62	***175.1***	$35.60
6	26.125	0.25	5	36	117.10	3.25	12.75	5	13	4.03	68.56	16.95	$17.29	$20.44	23.01	***186.4***	$37.73
6	26.125	0.25	5	36	117.10	3.25	12.75	6	5	2.20	34.29	10.90	$11.12	$20.44	17.74	***143.7***	$31.56
6	26.125	0.25	5	36	117.10	3.25	12.75	6	7	3.08	50.38	13.91	$14.18	$20.44	20.42	***165.4***	$34.62
6	26.125	0.25	5	36	117.10	3.25	12.75	6	9	3.96	65.38	16.91	$17.25	$20.44	22.58	***182.9***	$37.69
6	26.125	0.25	5	36	117.10	3.25	12.75	6	11	4.84	79.00	19.91	$20.31	$20.44	24.35	***197.2***	$40.75
6	26.125	0.25	5	36	117.10	3.25	12.75	6	13	5.72	92.24	22.92	$23.38	$20.44	25.92	***210.0***	$43.82
6	26.125	0.25	6	12	131.74	10.98	52.17	3	5	0.55	8.85	18.37	$18.74	$20.44	9.19	304.4	$39.18
6	26.125	0.25	6	12	131.74	10.98	52.17	3	7	0.77	13.21	19.12	$19.50	$20.44	9.68	320.8	$39.94
6	26.125	0.25	6	12	131.74	10.98	52.17	3	9	0.99	17.50	19.87	$20.27	$20.44	10.13	335.6	$40.71
6	26.125	0.25	6	12	131.74	10.98	52.17	3	11	1.21	21.76	20.63	$21.04	$20.44	10.54	349.4	$41.48
6	26.125	0.25	6	12	131.74	10.98	52.17	3	13	1.43	26.00	21.38	$21.81	$20.44	10.93	362.2	$42.24
6	26.125	0.25	6	12	131.74	10.98	52.17	4	5	1.00	15.94	19.83	$20.23	$20.44	9.97	330.4	$40.67
6	26.125	0.25	6	12	131.74	10.98	52.17	4	7	1.40	23.71	21.17	$21.59	$20.44	10.72	355.3	$42.03
6	26.125	0.25	6	12	131.74	10.98	52.17	4	9	1.80	31.29	22.50	$22.95	$20.44	11.38	377.3	$43.39
6	26.125	0.25	6	12	131.74	10.98	52.17	4	11	2.20	38.76	23.84	$24.31	$20.44	11.98	397.1	$44.75
6	26.125	0.25	6	12	131.74	10.98	52.17	4	13	2.60	46.06	25.17	$25.68	$20.44	12.53	415.1	$46.12
6	26.125	0.25	6	12	131.74	10.98	52.17	5	5	1.55	24.47	21.70	$22.14	$20.44	10.79	357.6	$42.58
6	26.125	0.25	6	12	131.74	10.98	52.17	5	7	2.17	36.18	23.79	$24.27	$20.44	11.78	390.4	$44.71
6	26.125	0.25	6	12	131.74	10.98	52.17	5	9	2.79	47.50	25.88	$26.39	$20.44	12.63	418.6	$46.83
6	26.125	0.25	6	12	131.74	10.98	52.17	5	11	3.41	58.47	27.96	$28.52	$20.44	13.38	443.4	$48.96
6	26.125	0.25	6	12	131.74	10.98	52.17	5	13	4.03	68.56	30.05	$30.65	$20.44	14.02	464.6	$51.09
6	26.125	0.25	6	12	131.74	10.98	52.17	6	5	2.20	34.29	24.00	$24.48	$20.44	11.63	385.4	$44.92
6	26.125	0.25	6	12	131.74	10.98	52.17	6	7	3.08	50.38	27.00	$27.54	$20.44	12.83	425.3	$47.98
6	26.125	0.25	6	12	131.74	10.98	52.17	6	9	3.96	65.38	30.01	$30.61	$20.44	13.82	458.1	$51.05
6	26.125	0.25	6	12	131.74	10.98	52.17	6	11	4.84	79.00	33.01	$33.67	$20.44	14.64	485.3	$54.11
6	26.125	0.25	6	12	131.74	10.98	52.17	6	13	5.72	92.24	36.02	$36.74	$20.44	15.38	509.8	$57.17

White Text - inadequate temperature and shrinkage steel
Italic Text - inadequate structural capacity
Highlighted Row - good design – valid for use

1 in. = 25.4 mm
1 ft = 0.3048 m
1 kip = 4.448 kN

Table A-1 (continued). Interior Section Strength and Cost Calculations for All Configurations

Top Width (in)	Base Width (in)	Concrete Volume (yd^3 / ft)	Stirrups					Longitudinal Steel				Weight of Steel (lb / ft)	Cost of Steel ($ / ft)	Cost of Concrete ($ / ft)	Yield Line Calculations		Total Cost ($ / ft)
			Bar #	Spacing (in)	Length (in)	Length / ft (ft / ft)	M_C (k-ft / ft)	Bar #	Quantity	A_s (in^2)	M_w (k-ft / ft)				L_{CR} (ft)	ΦR_w (kips)	
6	26.125	0.25	6	18	131.74	7.32	35.39	3	5	0.55	8.85	12.87	$13.13	$20.44	9.66	217.2	$33.57
6	26.125	0.25	6	18	131.74	7.32	35.39	3	7	0.77	13.21	13.62	$13.90	$20.44	10.32	232.1	$34.34
6	26.125	0.25	6	18	131.74	7.32	35.39	3	9	0.99	17.50	14.38	$14.66	$20.44	10.91	245.3	$35.10
6	26.125	0.25	6	18	131.74	7.32	35.39	3	11	1.21	21.76	15.13	$15.43	$20.44	11.45	257.4	$35.87
6	26.125	0.25	6	18	131.74	7.32	35.39	3	13	1.43	26.00	15.88	$16.20	$20.44	11.95	268.6	$36.64
6	26.125	0.25	6	18	131.74	7.32	35.39	4	5	1.00	15.94	14.33	$14.62	$20.44	10.70	240.6	$35.06
6	26.125	0.25	6	18	131.74	7.32	35.39	4	7	1.40	23.71	15.67	$15.98	$20.44	11.68	262.6	$36.42
6	26.125	0.25	6	18	131.74	7.32	35.39	4	9	1.80	31.29	17.00	$17.35	$20.44	12.53	281.7	$37.78
6	26.125	0.25	6	18	131.74	7.32	35.39	4	11	2.20	38.76	18.34	$18.71	$20.44	13.29	298.8	$39.15
6	26.125	0.25	6	18	131.74	7.32	35.39	4	13	2.60	46.06	19.68	$20.07	$20.44	13.98	314.3	$40.51
6	26.125	0.25	6	18	131.74	7.32	35.39	5	5	1.55	24.47	16.21	$16.53	$20.44	11.77	264.7	$36.97
6	26.125	0.25	6	18	131.74	7.32	35.39	5	7	2.17	36.18	18.29	$18.66	$20.44	13.04	293.1	$39.10
6	26.125	0.25	6	18	131.74	7.32	35.39	5	9	2.79	47.50	20.38	$20.79	$20.44	14.11	317.2	$41.23
6	26.125	0.25	6	18	131.74	7.32	35.39	5	11	3.41	58.47	22.47	$22.92	$20.44	15.05	338.4	$43.35
6	26.125	0.25	6	18	131.74	7.32	35.39	5	13	4.03	68.56	24.55	$25.04	$20.44	15.85	356.3	$45.48
6	26.125	0.25	6	18	131.74	7.32	35.39	6	5	2.20	34.29	18.50	$18.87	$20.44	12.85	288.8	$39.31
6	26.125	0.25	6	18	131.74	7.32	35.39	6	7	3.08	50.38	21.51	$21.94	$20.44	14.36	323.0	$42.38
6	26.125	0.25	6	18	131.74	7.32	35.39	6	9	3.96	65.38	24.51	$25.00	$20.44	15.60	350.8	$45.44
6	26.125	0.25	6	18	131.74	7.32	35.39	6	11	4.84	79.00	27.51	$28.07	$20.44	16.62	373.7	$48.50
6	26.125	0.25	6	18	131.74	7.32	35.39	6	13	5.72	92.24	30.52	$31.13	$20.44	17.54	394.4	$51.57
6	26.125	0.25	6	24	131.74	5.49	26.79	3	5	0.55	8.85	10.12	$10.33	$20.44	10.10	***171.9***	$30.77
6	26.125	0.25	6	24	131.74	5.49	26.79	3	7	0.77	13.21	10.88	$11.09	$20.44	10.90	***185.6***	$31.53
6	26.125	0.25	6	24	131.74	5.49	26.79	3	9	0.99	17.50	11.63	$11.86	$20.44	11.61	***197.7***	$32.30
6	26.125	0.25	6	24	131.74	5.49	26.79	3	11	1.21	21.76	12.38	$12.63	$20.44	12.26	***208.6***	$33.07
6	26.125	0.25	6	24	131.74	5.49	26.79	3	13	1.43	26.00	13.13	$13.40	$20.44	12.85	218.7	$33.83
6	26.125	0.25	6	24	131.74	5.49	26.79	4	5	1.00	15.94	11.58	$11.82	$20.44	11.36	***193.4***	$32.26
6	26.125	0.25	6	24	131.74	5.49	26.79	4	7	1.40	23.71	12.92	$13.18	$20.44	12.53	***213.3***	$33.62
6	26.125	0.25	6	24	131.74	5.49	26.79	4	9	1.80	31.29	14.26	$14.54	$20.44	13.54	230.5	$34.98
6	26.125	0.25	6	24	131.74	5.49	26.79	4	11	2.20	38.76	15.59	$15.90	$20.44	14.44	245.7	$36.34
6	26.125	0.25	6	24	131.74	5.49	26.79	4	13	2.60	46.06	16.93	$17.27	$20.44	15.24	259.4	$37.71
6	26.125	0.25	6	24	131.74	5.49	26.79	5	5	1.55	24.47	13.46	$13.73	$20.44	12.64	215.1	$34.17
6	26.125	0.25	6	24	131.74	5.49	26.79	5	7	2.17	36.18	15.55	$15.86	$20.44	14.14	240.6	$36.30
6	26.125	0.25	6	24	131.74	5.49	26.79	5	9	2.79	47.50	17.63	$17.98	$20.44	15.40	262.0	$38.42
6	26.125	0.25	6	24	131.74	5.49	26.79	5	11	3.41	58.47	19.72	$20.11	$20.44	16.50	280.8	$40.55
6	26.125	0.25	6	24	131.74	5.49	26.79	5	13	4.03	68.56	21.80	$22.24	$20.44	17.43	296.7	$42.68
6	26.125	0.25	6	24	131.74	5.49	26.79	6	5	2.20	34.29	15.75	$16.07	$20.44	13.91	236.8	$36.51
6	26.125	0.25	6	24	131.74	5.49	26.79	6	7	3.08	50.38	18.76	$19.13	$20.44	15.69	267.1	$39.57
6	26.125	0.25	6	24	131.74	5.49	26.79	6	9	3.96	65.38	21.76	$22.20	$20.44	17.14	291.8	$42.64
6	26.125	0.25	6	24	131.74	5.49	26.79	6	11	4.84	79.00	24.77	$25.26	$20.44	18.33	312.0	$45.70
6	26.125	0.25	6	24	131.74	5.49	26.79	6	13	5.72	92.24	27.77	$28.33	$20.44	19.40	330.2	$48.77

White Text - inadequate temperature and shrinkage steel
Italic Text - inadequate structural capacity
Highlighted Row - good design – valid for use

1 in. = 25.4 mm
1 ft = 0.3048 m
1 kip = 4.448 kN

Table A-1 (continued). Interior Section Strength and Cost Calculations for All Configurations

Top Width (in)	Base Width (in)	Concrete Volume (yd^3 / ft)	Stirrups					Longitudinal Steel				Weight of Steel (lb / ft)	Cost of Steel ($ / ft)	Cost of Concrete ($ / ft)	Yield Line Calculations		Total Cost ($ / ft)
			Bar #	Spacing (in)	Length (in)	Length / ft (ft / ft)	M_C (k-ft / ft)	Bar #	Quantity	A_s (in^2)	M_w (k-ft / ft)				L_{CR} (ft)	ΦR_w (kips)	
6	26.125	0.25	6	30	131.74	4.39	21.53	3	5	0.55	8.85	8.48	$8.65	$20.44	10.51	***143.8***	$29.08
6	26.125	0.25	6	30	131.74	4.39	21.53	3	7	0.77	13.21	9.23	$9.41	$20.44	11.44	***156.5***	$29.85
6	26.125	0.25	6	30	131.74	4.39	21.53	3	9	0.99	17.50	9.98	$10.18	$20.44	12.26	***167.7***	$30.62
6	26.125	0.25	6	30	131.74	4.39	21.53	3	11	1.21	21.76	10.73	$10.95	$20.44	13.00	***177.8***	$31.39
6	26.125	0.25	6	30	131.74	4.39	21.53	3	13	1.43	26.00	11.48	$11.71	$20.44	13.67	***187.0***	$32.15
6	26.125	0.25	6	30	131.74	4.39	21.53	4	5	1.00	15.94	9.94	$10.13	$20.44	11.97	***163.8***	$30.57
6	26.125	0.25	6	30	131.74	4.39	21.53	4	7	1.40	23.71	11.27	$11.50	$20.44	13.31	***182.1***	$31.94
6	26.125	0.25	6	30	131.74	4.39	21.53	4	9	1.80	31.29	12.61	$12.86	$20.44	14.46	***197.8***	$33.30
6	26.125	0.25	6	30	131.74	4.39	21.53	4	11	2.20	38.76	13.94	$14.22	$20.44	15.47	***211.7***	$34.66
6	26.125	0.25	6	30	131.74	4.39	21.53	4	13	2.60	46.06	15.28	$15.59	$20.44	16.38	224.1	$36.02
6	26.125	0.25	6	30	131.74	4.39	21.53	5	5	1.55	24.47	11.81	$12.05	$20.44	13.43	***183.8***	$32.49
6	26.125	0.25	6	30	131.74	4.39	21.53	5	7	2.17	36.18	13.90	$14.17	$20.44	15.13	***207.0***	$34.61
6	26.125	0.25	6	30	131.74	4.39	21.53	5	9	2.79	47.50	15.98	$16.30	$20.44	16.56	226.5	$36.74
6	26.125	0.25	6	30	131.74	4.39	21.53	5	11	3.41	58.47	18.07	$18.43	$20.44	17.80	243.5	$38.87
6	26.125	0.25	6	30	131.74	4.39	21.53	5	13	4.03	68.56	20.15	$20.56	$20.44	18.85	257.8	$41.00
6	26.125	0.25	6	30	131.74	4.39	21.53	6	5	2.20	34.29	14.11	$14.39	$20.44	14.88	***203.5***	$34.83
6	26.125	0.25	6	30	131.74	4.39	21.53	6	7	3.08	50.38	17.11	$17.45	$20.44	16.89	231.1	$37.89
6	26.125	0.25	6	30	131.74	4.39	21.53	6	9	3.96	65.38	20.11	$20.52	$20.44	18.53	253.4	$40.96
6	26.125	0.25	6	30	131.74	4.39	21.53	6	11	4.84	79.00	23.12	$23.58	$20.44	19.86	271.7	$44.02
6	26.125	0.25	6	30	131.74	4.39	21.53	6	13	5.72	92.24	26.12	$26.64	$20.44	21.06	288.1	$47.08
6	26.125	0.25	6	36	131.74	3.66	18.03	3	5	0.55	8.85	7.38	$7.52	$20.44	10.89	***124.8***	$27.96
6	26.125	0.25	6	36	131.74	3.66	18.03	3	7	0.77	13.21	8.13	$8.29	$20.44	11.94	***136.7***	$28.73
6	26.125	0.25	6	36	131.74	3.66	18.03	3	9	0.99	17.50	8.88	$9.06	$20.44	12.85	***147.2***	$29.50
6	26.125	0.25	6	36	131.74	3.66	18.03	3	11	1.21	21.76	9.63	$9.83	$20.44	13.67	***156.6***	$30.26
6	26.125	0.25	6	36	131.74	3.66	18.03	3	13	1.43	26.00	10.38	$10.59	$20.44	14.42	***165.2***	$31.03
6	26.125	0.25	6	36	131.74	3.66	18.03	4	5	1.00	15.94	8.84	$9.01	$20.44	12.53	***143.5***	$29.45
6	26.125	0.25	6	36	131.74	3.66	18.03	4	7	1.40	23.71	10.17	$10.38	$20.44	14.02	***160.6***	$30.81
6	26.125	0.25	6	36	131.74	3.66	18.03	4	9	1.80	31.29	11.51	$11.74	$20.44	15.29	***175.1***	$32.18
6	26.125	0.25	6	36	131.74	3.66	18.03	4	11	2.20	38.76	12.84	$13.10	$20.44	16.41	***188.0***	$33.54
6	26.125	0.25	6	36	131.74	3.66	18.03	4	13	2.60	46.06	14.18	$14.46	$20.44	17.42	***199.5***	$34.90
6	26.125	0.25	6	36	131.74	3.66	18.03	5	5	1.55	24.47	10.71	$10.93	$20.44	14.16	***162.1***	$31.36
6	26.125	0.25	6	36	131.74	3.66	18.03	5	7	2.17	36.18	12.80	$13.05	$20.44	16.04	***183.7***	$33.49
6	26.125	0.25	6	36	131.74	3.66	18.03	5	9	2.79	47.50	14.88	$15.18	$20.44	17.61	***201.7***	$35.62
6	26.125	0.25	6	36	131.74	3.66	18.03	5	11	3.41	58.47	16.97	$17.31	$20.44	18.98	217.3	$37.75
6	26.125	0.25	6	36	131.74	3.66	18.03	5	13	4.03	68.56	19.06	$19.44	$20.44	20.13	230.6	$39.88
6	26.125	0.25	6	36	131.74	3.66	18.03	6	5	2.20	34.29	13.01	$13.27	$20.44	15.75	***180.4***	$33.71
6	26.125	0.25	6	36	131.74	3.66	18.03	6	7	3.08	50.38	16.01	$16.33	$20.44	17.98	***205.9***	$36.77
6	26.125	0.25	6	36	131.74	3.66	18.03	6	9	3.96	65.38	19.01	$19.39	$20.44	19.78	226.5	$39.83
6	26.125	0.25	6	36	131.74	3.66	18.03	6	11	4.84	79.00	22.02	$22.46	$20.44	21.25	243.3	$42.90
6	26.125	0.25	6	36	131.74	3.66	18.03	6	13	5.72	92.24	25.02	$25.52	$20.44	22.56	258.4	$45.96

White Text - inadequate temperature and shrinkage steel
Italic Text - inadequate structural capacity
Highlighted Row - good design – valid for use

1 in. = 25.4 mm
1 ft = 0.3048 m
1 kip = 4.448 kN

Table A-1 (continued). Interior Section Strength and Cost Calculations for All Configurations

Top Width (in)	Base Width (in)	Concrete Volume (yd^3 / ft)	Stirrups					Longitudinal Steel				Weight of Steel (lb / ft)	Cost of Steel ($ / ft)	Cost of Concrete ($ / ft)	Yield Line Calculations		Total Cost ($ / ft)
			Bar #	Spacing (in)	Length (in)	Length / ft (ft / ft)	M_C (k-ft / ft)	Bar #	Quantity	A_s (in^2)	M_w (k-ft / ft)				L_{CR} (ft)	ΦR_w (kips)	
7	27.125	0.26	3	12	116.59	9.72	14.08	3	5	0.55	9.24	5.53	$5.64	$21.38	11.62	***104.0***	$27.02
7	27.125	0.26	3	12	116.59	9.72	14.08	3	7	0.77	13.76	6.29	$6.41	$21.38	12.88	***115.2***	$27.79
7	27.125	0.26	3	12	116.59	9.72	14.08	3	9	0.99	18.29	7.04	$7.18	$21.38	13.97	***125.0***	$28.56
7	27.125	0.26	3	12	116.59	9.72	14.08	3	11	1.21	22.74	7.79	$7.94	$21.38	14.94	***133.7***	$29.32
7	27.125	0.26	3	12	116.59	9.72	14.08	3	13	1.43	27.15	8.54	$8.71	$21.38	15.82	***141.6***	$30.09
7	27.125	0.26	3	12	116.59	9.72	14.08	4	5	1.00	16.65	6.99	$7.13	$21.38	13.59	***121.6***	$28.51
7	27.125	0.26	3	12	116.59	9.72	14.08	4	7	1.40	24.76	8.33	$8.50	$21.38	15.35	***137.4***	$29.88
7	27.125	0.26	3	12	116.59	9.72	14.08	4	9	1.80	32.71	9.67	$9.86	$21.38	16.85	***150.8***	$31.24
7	27.125	0.26	3	12	116.59	9.72	14.08	4	11	2.20	40.53	11.00	$11.22	$21.38	18.17	***162.6***	$32.60
7	27.125	0.26	3	12	116.59	9.72	14.08	4	13	2.60	48.18	12.34	$12.58	$21.38	19.35	***173.1***	$33.96
7	27.125	0.26	3	12	116.59	9.72	14.08	5	5	1.55	25.56	8.87	$9.05	$21.38	15.51	***138.8***	$30.42
7	27.125	0.26	3	12	116.59	9.72	14.08	5	7	2.17	37.79	10.95	$11.17	$21.38	17.72	***158.6***	$32.55
7	27.125	0.26	3	12	116.59	9.72	14.08	5	9	2.79	49.71	13.04	$13.30	$21.38	19.58	***175.2***	$34.68
7	27.125	0.26	3	12	116.59	9.72	14.08	5	11	3.41	61.21	15.13	$15.43	$21.38	21.18	***189.5***	$36.81
7	27.125	0.26	3	12	116.59	9.72	14.08	5	13	4.03	71.82	17.21	$17.56	$21.38	22.53	***201.6***	$38.94
7	27.125	0.26	3	12	116.59	9.72	14.08	6	5	2.20	35.85	11.16	$11.39	$21.38	17.40	***155.7***	$32.77
7	27.125	0.26	3	12	116.59	9.72	14.08	6	7	3.08	52.71	14.17	$14.45	$21.38	20.01	***179.0***	$35.83
7	27.125	0.26	3	12	116.59	9.72	14.08	6	9	3.96	68.50	17.17	$17.51	$21.38	22.12	***197.9***	$38.89
7	27.125	0.26	3	12	116.59	9.72	14.08	6	11	4.84	82.88	20.18	$20.58	$21.38	23.85	***213.4***	$41.96
7	27.125	0.26	3	12	116.59	9.72	14.08	6	13	5.72	96.88	23.18	$23.64	$21.38	25.40	227.2	$45.02
7	27.125	0.26	3	18	116.59	6.48	9.44	3	5	0.55	9.24	4.32	$4.40	$21.38	12.88	***77.3***	$25.78
7	27.125	0.26	3	18	116.59	6.48	9.44	3	7	0.77	13.76	5.07	$5.17	$21.38	14.47	***86.8***	$26.55
7	27.125	0.26	3	18	116.59	6.48	9.44	3	9	0.99	18.29	5.82	$5.94	$21.38	15.85	***95.1***	$27.32
7	27.125	0.26	3	18	116.59	6.48	9.44	3	11	1.21	22.74	6.57	$6.70	$21.38	17.06	***102.4***	$28.08
7	27.125	0.26	3	18	116.59	6.48	9.44	3	13	1.43	27.15	7.32	$7.47	$21.38	18.16	***109.0***	$28.85
7	27.125	0.26	3	18	116.59	6.48	9.44	4	5	1.00	16.65	5.78	$5.89	$21.38	15.37	***92.2***	$27.27
7	27.125	0.26	3	18	116.59	6.48	9.44	4	7	1.40	24.76	7.11	$7.25	$21.38	17.58	***105.5***	$28.63
7	27.125	0.26	3	18	116.59	6.48	9.44	4	9	1.80	32.71	8.45	$8.62	$21.38	19.44	***116.6***	$30.00
7	27.125	0.26	3	18	116.59	6.48	9.44	4	11	2.20	40.53	9.78	$9.98	$21.38	21.08	***126.5***	$31.36
7	27.125	0.26	3	18	116.59	6.48	9.44	4	13	2.60	48.18	11.12	$11.34	$21.38	22.54	***135.2***	$32.72
7	27.125	0.26	3	18	116.59	6.48	9.44	5	5	1.55	25.56	7.65	$7.80	$21.38	17.78	***106.7***	$29.18
7	27.125	0.26	3	18	116.59	6.48	9.44	5	7	2.17	37.79	9.74	$9.93	$21.38	20.52	***123.1***	$31.31
7	27.125	0.26	3	18	116.59	6.48	9.44	5	9	2.79	49.71	11.82	$12.06	$21.38	22.81	***136.9***	$33.44
7	27.125	0.26	3	18	116.59	6.48	9.44	5	11	3.41	61.21	13.91	$14.19	$21.38	24.79	***148.7***	$35.57
7	27.125	0.26	3	18	116.59	6.48	9.44	5	13	4.03	71.82	15.99	$16.31	$21.38	26.46	***158.8***	$37.69
7	27.125	0.26	3	18	116.59	6.48	9.44	6	5	2.20	35.85	9.95	$10.14	$21.38	20.12	***120.7***	$31.52
7	27.125	0.26	3	18	116.59	6.48	9.44	6	7	3.08	52.71	12.95	$13.21	$21.38	23.35	***140.1***	$34.59
7	27.125	0.26	3	18	116.59	6.48	9.44	6	9	3.96	68.50	15.95	$16.27	$21.38	25.95	***155.7***	$37.65
7	27.125	0.26	3	18	116.59	6.48	9.44	6	11	4.84	82.88	18.96	$19.34	$21.38	28.07	***168.4***	$40.72
7	27.125	0.26	3	18	116.59	6.48	9.44	6	13	5.72	96.88	21.96	$22.40	$21.38	29.98	***179.9***	$43.78

White Text - inadequate temperature and shrinkage steel
Italic Text - inadequate structural capacity
Highlighted Row - good design – valid for use

1 in. = 25.4 mm
1 ft = 0.3048 m
1 kip = 4.448 kN

Table A-1 (continued). Interior Section Strength and Cost Calculations for All Configurations

Top Width (in)	Base Width (in)	Concrete Volume (yd^3 / ft)	Stirrups					Longitudinal Steel				Weight of Steel (lb / ft)	Cost of Steel ($ / ft)	Cost of Concrete ($ / ft)	Yield Line Calculations		Total Cost ($ / ft)
			Bar #	Spacing (in)	Length (in)	Length / ft (ft / ft)	M_C (k-ft / ft)	Bar #	Quantity	A_s (in^2)	M_w (k-ft / ft)				L_{CR} (ft)	ΦR_w (kips)	
7	27.125	0.26	3	24	116.59	4.86	7.13	3	5	0.55	9.24	3.71	$3.78	$21.38	13.96	***63.2***	$25.16
7	27.125	0.26	3	24	116.59	4.86	7.13	3	7	0.77	13.76	4.46	$4.55	$21.38	15.84	***71.7***	$25.93
7	27.125	0.26	3	24	116.59	4.86	7.13	3	9	0.99	18.29	5.21	$5.31	$21.38	17.45	***79.0***	$26.69
7	27.125	0.26	3	24	116.59	4.86	7.13	3	11	1.21	22.74	5.96	$6.08	$21.38	18.86	***85.4***	$27.46
7	27.125	0.26	3	24	116.59	4.86	7.13	3	13	1.43	27.15	6.71	$6.85	$21.38	20.15	***91.2***	$28.23
7	27.125	0.26	3	24	116.59	4.86	7.13	4	5	1.00	16.65	5.17	$5.27	$21.38	16.89	***76.4***	$26.65
7	27.125	0.26	3	24	116.59	4.86	7.13	4	7	1.40	24.76	6.50	$6.63	$21.38	19.47	***88.1***	$28.01
7	27.125	0.26	3	24	116.59	4.86	7.13	4	9	1.80	32.71	7.84	$8.00	$21.38	21.63	***97.9***	$29.37
7	27.125	0.26	3	24	116.59	4.86	7.13	4	11	2.20	40.53	9.17	$9.36	$21.38	23.53	***106.5***	$30.74
7	27.125	0.26	3	24	116.59	4.86	7.13	4	13	2.60	48.18	10.51	$10.72	$21.38	25.22	***114.2***	$32.10
7	27.125	0.26	3	24	116.59	4.86	7.13	5	5	1.55	25.56	7.04	$7.18	$21.38	19.70	***89.2***	$28.56
7	27.125	0.26	3	24	116.59	4.86	7.13	5	7	2.17	37.79	9.13	$9.31	$21.38	22.89	***103.6***	$30.69
7	27.125	0.26	3	24	116.59	4.86	7.13	5	9	2.79	49.71	11.21	$11.44	$21.38	25.54	***115.6***	$32.82
7	27.125	0.26	3	24	116.59	4.86	7.13	5	11	3.41	61.21	13.30	$13.57	$21.38	27.83	***126.0***	$34.94
7	27.125	0.26	3	24	116.59	4.86	7.13	5	13	4.03	71.82	15.39	$15.69	$21.38	29.76	***134.7***	$37.07
7	27.125	0.26	3	24	116.59	4.86	7.13	6	5	2.20	35.85	9.34	$9.52	$21.38	22.42	***101.5***	$30.90
7	27.125	0.26	3	24	116.59	4.86	7.13	6	7	3.08	52.71	12.34	$12.59	$21.38	26.16	***118.4***	$33.97
7	27.125	0.26	3	24	116.59	4.86	7.13	6	9	3.96	68.50	15.34	$15.65	$21.38	29.17	***132.0***	$37.03
7	27.125	0.26	3	24	116.59	4.86	7.13	6	11	4.84	82.88	18.35	$18.72	$21.38	31.62	***143.1***	$40.09
7	27.125	0.26	3	24	116.59	4.86	7.13	6	13	5.72	96.88	21.35	$21.78	$21.38	33.82	***153.1***	$43.16
7	27.125	0.26	3	30	116.59	3.89	5.70	3	5	0.55	9.24	3.34	$3.41	$21.38	14.96	***54.2***	$24.79
7	27.125	0.26	3	30	116.59	3.89	5.70	3	7	0.77	13.76	4.09	$4.18	$21.38	17.08	***61.8***	$25.55
7	27.125	0.26	3	30	116.59	3.89	5.70	3	9	0.99	18.29	4.85	$4.94	$21.38	18.90	***68.5***	$26.32
7	27.125	0.26	3	30	116.59	3.89	5.70	3	11	1.21	22.74	5.60	$5.71	$21.38	20.50	***74.2***	$27.09
7	27.125	0.26	3	30	116.59	3.89	5.70	3	13	1.43	27.15	6.35	$6.48	$21.38	21.94	***79.5***	$27.86
7	27.125	0.26	3	30	116.59	3.89	5.70	4	5	1.00	16.65	4.80	$4.90	$21.38	18.27	***66.2***	$26.28
7	27.125	0.26	3	30	116.59	3.89	5.70	4	7	1.40	24.76	6.14	$6.26	$21.38	21.18	***76.7***	$27.64
7	27.125	0.26	3	30	116.59	3.89	5.70	4	9	1.80	32.71	7.47	$7.62	$21.38	23.61	***85.5***	$29.00
7	27.125	0.26	3	30	116.59	3.89	5.70	4	11	2.20	40.53	8.81	$8.99	$21.38	25.74	***93.2***	$30.36
7	27.125	0.26	3	30	116.59	3.89	5.70	4	13	2.60	48.18	10.15	$10.35	$21.38	27.64	***100.1***	$31.73
7	27.125	0.26	3	30	116.59	3.89	5.70	5	5	1.55	25.56	6.68	$6.81	$21.38	21.43	***77.6***	$28.19
7	27.125	0.26	3	30	116.59	3.89	5.70	5	7	2.17	37.79	8.76	$8.94	$21.38	25.02	***90.6***	$30.32
7	27.125	0.26	3	30	116.59	3.89	5.70	5	9	2.79	49.71	10.85	$11.07	$21.38	28.00	***101.4***	$32.44
7	27.125	0.26	3	30	116.59	3.89	5.70	5	11	3.41	61.21	12.93	$13.19	$21.38	30.56	***110.7***	$34.57
7	27.125	0.26	3	30	116.59	3.89	5.70	5	13	4.03	71.82	15.02	$15.32	$21.38	32.73	***118.5***	$36.70
7	27.125	0.26	3	30	116.59	3.89	5.70	6	5	2.20	35.85	8.97	$9.15	$21.38	24.49	***88.7***	$30.53
7	27.125	0.26	3	30	116.59	3.89	5.70	6	7	3.08	52.71	11.98	$12.21	$21.38	28.69	***103.9***	$33.59
7	27.125	0.26	3	30	116.59	3.89	5.70	6	9	3.96	68.50	14.98	$15.28	$21.38	32.07	***116.1***	$36.66
7	27.125	0.26	3	30	116.59	3.89	5.70	6	11	4.84	82.88	17.98	$18.34	$21.38	34.82	***126.1***	$39.72
7	27.125	0.26	3	30	116.59	3.89	5.70	6	13	5.72	96.88	20.99	$21.41	$21.38	37.28	***135.0***	$42.79

White Text - inadequate temperature and shrinkage steel
Italic Text - inadequate structural capacity
Highlighted Row - good design – valid for use

1 in. = 25.4 mm
1 ft = 0.3048 m
1 kip = 4.448 kN

Table A-1 (continued). Interior Section Strength and Cost Calculations for All Configurations

Top Width (in)	Base Width (in)	Concrete Volume (yd^3 / ft)	Stirrups					Longitudinal Steel				Weight of Steel (lb / ft)	Cost of Steel ($ / ft)	Cost of Concrete ($ / ft)	Yield Line Calculations		Total Cost ($ / ft)
			Bar #	Spacing (in)	Length (in)	Length / ft (ft / ft)	M_C (k-ft / ft)	Bar #	Quantity	A_s (in^2)	M_w (k-ft / ft)				L_{CR} (ft)	ΦR_w (kips)	
7	27.125	0.26	3	36	116.59	3.24	4.75	3	5	0.55	9.24	3.10	$3.16	$21.38	15.87	***47.9***	$24.54
7	27.125	0.26	3	36	116.59	3.24	4.75	3	7	0.77	13.76	3.85	$3.93	$21.38	18.22	***55.0***	$25.31
7	27.125	0.26	3	36	116.59	3.24	4.75	3	9	0.99	18.29	4.60	$4.69	$21.38	20.23	***61.0***	$26.07
7	27.125	0.26	3	36	116.59	3.24	4.75	3	11	1.21	22.74	5.35	$5.46	$21.38	21.98	***66.3***	$26.84
7	27.125	0.26	3	36	116.59	3.24	4.75	3	13	1.43	27.15	6.11	$6.23	$21.38	23.57	***71.1***	$27.61
7	27.125	0.26	3	36	116.59	3.24	4.75	4	5	1.00	16.65	4.56	$4.65	$21.38	19.53	***58.9***	$26.03
7	27.125	0.26	3	36	116.59	3.24	4.75	4	7	1.40	24.76	5.89	$6.01	$21.38	22.73	***68.6***	$27.39
7	27.125	0.26	3	36	116.59	3.24	4.75	4	9	1.80	32.71	7.23	$7.37	$21.38	25.41	***76.7***	$28.75
7	27.125	0.26	3	36	116.59	3.24	4.75	4	11	2.20	40.53	8.57	$8.74	$21.38	27.75	***83.7***	$30.12
7	27.125	0.26	3	36	116.59	3.24	4.75	4	13	2.60	48.18	9.90	$10.10	$21.38	29.83	***90.0***	$31.48
7	27.125	0.26	3	36	116.59	3.24	4.75	5	5	1.55	25.56	6.43	$6.56	$21.38	23.01	***69.5***	$27.94
7	27.125	0.26	3	36	116.59	3.24	4.75	5	7	2.17	37.79	8.52	$8.69	$21.38	26.96	***81.3***	$30.07
7	27.125	0.26	3	36	116.59	3.24	4.75	5	9	2.79	49.71	10.60	$10.82	$21.38	30.23	***91.2***	$32.20
7	27.125	0.26	3	36	116.59	3.24	4.75	5	11	3.41	61.21	12.69	$12.94	$21.38	33.04	***99.7***	$34.32
7	27.125	0.26	3	36	116.59	3.24	4.75	5	13	4.03	71.82	14.78	$15.07	$21.38	35.42	***106.9***	$36.45
7	27.125	0.26	3	36	116.59	3.24	4.75	6	5	2.20	35.85	8.73	$8.90	$21.38	26.38	***79.6***	$30.28
7	27.125	0.26	3	36	116.59	3.24	4.75	6	7	3.08	52.71	11.73	$11.97	$21.38	30.99	***93.5***	$33.35
7	27.125	0.26	3	36	116.59	3.24	4.75	6	9	3.96	68.50	14.74	$15.03	$21.38	34.69	***104.7***	$36.41
7	27.125	0.26	3	36	116.59	3.24	4.75	6	11	4.84	82.88	17.74	$18.09	$21.38	37.71	***113.8***	$39.47
7	27.125	0.26	3	36	116.59	3.24	4.75	6	13	5.72	96.88	20.74	$21.16	$21.38	40.41	***122.0***	$42.54
7	27.125	0.26	4	12	117.66	9.80	25.42	3	5	0.55	9.24	8.43	$8.60	$21.38	10.27	***165.9***	$29.98
7	27.125	0.26	4	12	117.66	9.80	25.42	3	7	0.77	13.76	9.18	$9.37	$21.38	11.13	***179.7***	$30.74
7	27.125	0.26	4	12	117.66	9.80	25.42	3	9	0.99	18.29	9.93	$10.13	$21.38	11.89	***192.0***	$31.51
7	27.125	0.26	4	12	117.66	9.80	25.42	3	11	1.21	22.74	10.69	$10.90	$21.38	12.57	***203.0***	$32.28
7	27.125	0.26	4	12	117.66	9.80	25.42	3	13	1.43	27.15	11.44	$11.67	$21.38	13.20	***213.1***	$33.05
7	27.125	0.26	4	12	117.66	9.80	25.42	4	5	1.00	16.65	9.89	$10.09	$21.38	11.62	***187.6***	$31.47
7	27.125	0.26	4	12	117.66	9.80	25.42	4	7	1.40	24.76	11.23	$11.45	$21.38	12.86	***207.7***	$32.83
7	27.125	0.26	4	12	117.66	9.80	25.42	4	9	1.80	32.71	12.56	$12.81	$21.38	13.93	225.0	$34.19
7	27.125	0.26	4	12	117.66	9.80	25.42	4	11	2.20	40.53	13.90	$14.18	$21.38	14.88	240.3	$35.55
7	27.125	0.26	4	12	117.66	9.80	25.42	4	13	2.60	48.18	15.23	$15.54	$21.38	15.74	254.1	$36.92
7	27.125	0.26	4	12	117.66	9.80	25.42	5	5	1.55	25.56	11.76	$12.00	$21.38	12.98	***209.5***	$33.38
7	27.125	0.26	4	12	117.66	9.80	25.42	5	7	2.17	37.79	13.85	$14.13	$21.38	14.56	235.1	$35.51
7	27.125	0.26	4	12	117.66	9.80	25.42	5	9	2.79	49.71	15.94	$16.26	$21.38	15.90	256.7	$37.63
7	27.125	0.26	4	12	117.66	9.80	25.42	5	11	3.41	61.21	18.02	$18.38	$21.38	17.06	275.5	$39.76
7	27.125	0.26	4	12	117.66	9.80	25.42	5	13	4.03	71.82	20.11	$20.51	$21.38	18.05	291.5	$41.89
7	27.125	0.26	4	12	117.66	9.80	25.42	6	5	2.20	35.85	14.06	$14.34	$21.38	14.32	231.3	$35.72
7	27.125	0.26	4	12	117.66	9.80	25.42	6	7	3.08	52.71	17.06	$17.40	$21.38	16.21	261.8	$38.78
7	27.125	0.26	4	12	117.66	9.80	25.42	6	9	3.96	68.50	20.07	$20.47	$21.38	17.75	286.6	$41.85
7	27.125	0.26	4	12	117.66	9.80	25.42	6	11	4.84	82.88	23.07	$23.53	$21.38	19.01	307.0	$44.91
7	27.125	0.26	4	12	117.66	9.80	25.42	6	13	5.72	96.88	26.08	$26.60	$21.38	20.15	325.4	$47.98

White Text - inadequate temperature and shrinkage steel
Italic Text - inadequate structural capacity
Highlighted Row - good design – valid for use

1 in. = 25.4 mm
1 ft = 0.3048 m
1 kip = 4.448 kN

Table A-1 (continued). Interior Section Strength and Cost Calculations for All Configurations

Top Width (in)	Base Width (in)	Concrete Volume (yd^3 / ft)	Stirrups					Longitudinal Steel				Weight of Steel (lb / ft)	Cost of Steel ($ / ft)	Cost of Concrete ($ / ft)	Yield Line Calculations		Total Cost ($ / ft)
			Bar #	Spacing (in)	Length (in)	Length / ft (ft / ft)	M_C (k-ft / ft)	Bar #	Quantity	A_s (in^2)	M_w (k-ft / ft)				L_{CR} (ft)	ΦR_w (kips)	
7	27.125	0.26	4	18	117.66	6.54	17.06	3	5	0.55	9.24	6.25	$6.37	$21.38	11.13	***120.5***	$27.75
7	27.125	0.26	4	18	117.66	6.54	17.06	3	7	0.77	13.76	7.00	$7.14	$21.38	12.24	***132.6***	$28.52
7	27.125	0.26	4	18	117.66	6.54	17.06	3	9	0.99	18.29	7.75	$7.91	$21.38	13.21	***143.2***	$29.28
7	27.125	0.26	4	18	117.66	6.54	17.06	3	11	1.21	22.74	8.50	$8.67	$21.38	14.08	***152.6***	$30.05
7	27.125	0.26	4	18	117.66	6.54	17.06	3	13	1.43	27.15	9.25	$9.44	$21.38	14.87	***161.2***	$30.82
7	27.125	0.26	4	18	117.66	6.54	17.06	4	5	1.00	16.65	7.71	$7.86	$21.38	12.87	***139.5***	$29.24
7	27.125	0.26	4	18	117.66	6.54	17.06	4	7	1.40	24.76	9.04	$9.22	$21.38	14.45	***156.6***	$30.60
7	27.125	0.26	4	18	117.66	6.54	17.06	4	9	1.80	32.71	10.38	$10.59	$21.38	15.80	***171.2***	$31.97
7	27.125	0.26	4	18	117.66	6.54	17.06	4	11	2.20	40.53	11.71	$11.95	$21.38	16.99	***184.0***	$33.33
7	27.125	0.26	4	18	117.66	6.54	17.06	4	13	2.60	48.18	13.05	$13.31	$21.38	18.05	***195.6***	$34.69
7	27.125	0.26	4	18	117.66	6.54	17.06	5	5	1.55	25.56	9.58	$9.77	$21.38	14.59	***158.1***	$31.15
7	27.125	0.26	4	18	117.66	6.54	17.06	5	7	2.17	37.79	11.67	$11.90	$21.38	16.58	***179.7***	$33.28
7	27.125	0.26	4	18	117.66	6.54	17.06	5	9	2.79	49.71	13.75	$14.03	$21.38	18.25	***197.8***	$35.41
7	27.125	0.26	4	18	117.66	6.54	17.06	5	11	3.41	61.21	15.84	$16.16	$21.38	19.70	***213.4***	$37.54
7	27.125	0.26	4	18	117.66	6.54	17.06	5	13	4.03	71.82	17.93	$18.28	$21.38	20.92	226.7	$39.66
7	27.125	0.26	4	18	117.66	6.54	17.06	6	5	2.20	35.85	11.88	$12.11	$21.38	16.29	***176.5***	$33.49
7	27.125	0.26	4	18	117.66	6.54	17.06	6	7	3.08	52.71	14.88	$15.18	$21.38	18.64	***202.0***	$36.56
7	27.125	0.26	4	18	117.66	6.54	17.06	6	9	3.96	68.50	17.88	$18.24	$21.38	20.55	222.7	$39.62
7	27.125	0.26	4	18	117.66	6.54	17.06	6	11	4.84	82.88	20.89	$21.31	$21.38	22.11	239.6	$42.69
7	27.125	0.26	4	18	117.66	6.54	17.06	6	13	5.72	96.88	23.89	$24.37	$21.38	23.51	254.8	$45.75
7	27.125	0.26	4	24	117.66	4.90	12.83	3	5	0.55	9.24	5.15	$5.26	$21.38	11.89	***96.9***	$26.64
7	27.125	0.26	4	24	117.66	4.90	12.83	3	7	0.77	13.76	5.91	$6.02	$21.38	13.21	***107.7***	$27.40
7	27.125	0.26	4	24	117.66	4.90	12.83	3	9	0.99	18.29	6.66	$6.79	$21.38	14.37	***117.2***	$28.17
7	27.125	0.26	4	24	117.66	4.90	12.83	3	11	1.21	22.74	7.41	$7.56	$21.38	15.39	***125.5***	$28.94
7	27.125	0.26	4	24	117.66	4.90	12.83	3	13	1.43	27.15	8.16	$8.33	$21.38	16.32	***133.1***	$29.71
7	27.125	0.26	4	24	117.66	4.90	12.83	4	5	1.00	16.65	6.61	$6.75	$21.38	13.97	***113.9***	$28.13
7	27.125	0.26	4	24	117.66	4.90	12.83	4	7	1.40	24.76	7.95	$8.11	$21.38	15.83	***129.1***	$29.49
7	27.125	0.26	4	24	117.66	4.90	12.83	4	9	1.80	32.71	9.29	$9.47	$21.38	17.40	***141.9***	$30.85
7	27.125	0.26	4	24	117.66	4.90	12.83	4	11	2.20	40.53	10.62	$10.84	$21.38	18.79	***153.2***	$32.21
7	27.125	0.26	4	24	117.66	4.90	12.83	4	13	2.60	48.18	11.96	$12.20	$21.38	20.03	***163.3***	$33.58
7	27.125	0.26	4	24	117.66	4.90	12.83	5	5	1.55	25.56	8.49	$8.66	$21.38	16.00	***130.4***	$30.04
7	27.125	0.26	4	24	117.66	4.90	12.83	5	7	2.17	37.79	10.58	$10.79	$21.38	18.32	***149.4***	$32.17
7	27.125	0.26	4	24	117.66	4.90	12.83	5	9	2.79	49.71	12.66	$12.91	$21.38	20.27	***165.3***	$34.29
7	27.125	0.26	4	24	117.66	4.90	12.83	5	11	3.41	61.21	14.75	$15.04	$21.38	21.95	***179.0***	$36.42
7	27.125	0.26	4	24	117.66	4.90	12.83	5	13	4.03	71.82	16.83	$17.17	$21.38	23.38	***190.6***	$38.55
7	27.125	0.26	4	24	117.66	4.90	12.83	6	5	2.20	35.85	10.78	$11.00	$21.38	17.98	***146.6***	$32.38
7	27.125	0.26	4	24	117.66	4.90	12.83	6	7	3.08	52.71	13.79	$14.06	$21.38	20.73	***169.0***	$35.44
7	27.125	0.26	4	24	117.66	4.90	12.83	6	9	3.96	68.50	16.79	$17.13	$21.38	22.94	***187.0***	$38.51
7	27.125	0.26	4	24	117.66	4.90	12.83	6	11	4.84	82.88	19.80	$20.19	$21.38	24.76	***201.8***	$41.57
7	27.125	0.26	4	24	117.66	4.90	12.83	6	13	5.72	96.88	22.80	$23.26	$21.38	26.38	215.1	$44.64

White Text - inadequate temperature and shrinkage steel
Italic Text - inadequate structural capacity
Highlighted Row - good design – valid for use

1 in. = 25.4 mm
1 ft = 0.3048 m
1 kip = 4.448 kN

Table A-1 (continued). Interior Section Strength and Cost Calculations for All Configurations

Top Width (in)	Base Width (in)	Concrete Volume (yd^3 / ft)	Stirrups					Longitudinal Steel				Weight of Steel (lb / ft)	Cost of Steel ($ / ft)	Cost of Concrete ($ / ft)	Yield Line Calculations		Total Cost ($ / ft)
			Bar #	Spacing (in)	Length (in)	Length / ft (ft / ft)	M_C (k-ft / ft)	Bar #	Quantity	A_s (in^2)	M_w (k-ft / ft)				L_{CR} (ft)	ΦR_w (kips)	
7	27.125	0.26	4	30	117.66	3.92	10.30	3	5	0.55	9.24	4.50	$4.59	$21.38	12.58	***82.3***	$25.97
7	27.125	0.26	4	30	117.66	3.92	10.30	3	7	0.77	13.76	5.25	$5.36	$21.38	14.09	***92.2***	$26.74
7	27.125	0.26	4	30	117.66	3.92	10.30	3	9	0.99	18.29	6.00	$6.12	$21.38	15.40	***100.8***	$27.50
7	27.125	0.26	4	30	117.66	3.92	10.30	3	11	1.21	22.74	6.76	$6.89	$21.38	16.56	***108.4***	$28.27
7	27.125	0.26	4	30	117.66	3.92	10.30	3	13	1.43	27.15	7.51	$7.66	$21.38	17.61	***115.2***	$29.04
7	27.125	0.26	4	30	117.66	3.92	10.30	4	5	1.00	16.65	5.96	$6.08	$21.38	14.95	***97.8***	$27.46
7	27.125	0.26	4	30	117.66	3.92	10.30	4	7	1.40	24.76	7.30	$7.44	$21.38	17.05	***111.6***	$28.82
7	27.125	0.26	4	30	117.66	3.92	10.30	4	9	1.80	32.71	8.63	$8.80	$21.38	18.83	***123.2***	$30.18
7	27.125	0.26	4	30	117.66	3.92	10.30	4	11	2.20	40.53	9.97	$10.17	$21.38	20.39	***133.4***	$31.55
7	27.125	0.26	4	30	117.66	3.92	10.30	4	13	2.60	48.18	11.30	$11.53	$21.38	21.79	***142.6***	$32.91
7	27.125	0.26	4	30	117.66	3.92	10.30	5	5	1.55	25.56	7.83	$7.99	$21.38	17.24	***112.8***	$29.37
7	27.125	0.26	4	30	117.66	3.92	10.30	5	7	2.17	37.79	9.92	$10.12	$21.38	19.86	***130.0***	$31.50
7	27.125	0.26	4	30	117.66	3.92	10.30	5	9	2.79	49.71	12.01	$12.25	$21.38	22.05	***144.3***	$33.63
7	27.125	0.26	4	30	117.66	3.92	10.30	5	11	3.41	61.21	14.09	$14.37	$21.38	23.94	***156.7***	$35.75
7	27.125	0.26	4	30	117.66	3.92	10.30	5	13	4.03	71.82	16.18	$16.50	$21.38	25.54	***167.1***	$37.88
7	27.125	0.26	4	30	117.66	3.92	10.30	6	5	2.20	35.85	10.13	$10.33	$21.38	19.48	***127.5***	$31.71
7	27.125	0.26	4	30	117.66	3.92	10.30	6	7	3.08	52.71	13.13	$13.40	$21.38	22.56	***147.6***	$34.78
7	27.125	0.26	4	30	117.66	3.92	10.30	6	9	3.96	68.50	16.14	$16.46	$21.38	25.05	***163.9***	$37.84
7	27.125	0.26	4	30	117.66	3.92	10.30	6	11	4.84	82.88	19.14	$19.52	$21.38	27.08	***177.2***	$40.90
7	27.125	0.26	4	30	117.66	3.92	10.30	6	13	5.72	96.88	22.15	$22.59	$21.38	28.90	***189.1***	$43.97
7	27.125	0.26	4	36	117.66	3.27	8.61	3	5	0.55	9.24	4.06	$4.14	$21.38	13.21	***72.3***	$25.52
7	27.125	0.26	4	36	117.66	3.27	8.61	3	7	0.77	13.76	4.82	$4.91	$21.38	14.89	***81.5***	$26.29
7	27.125	0.26	4	36	117.66	3.27	8.61	3	9	0.99	18.29	5.57	$5.68	$21.38	16.35	***89.4***	$27.06
7	27.125	0.26	4	36	117.66	3.27	8.61	3	11	1.21	22.74	6.32	$6.45	$21.38	17.62	***96.4***	$27.82
7	27.125	0.26	4	36	117.66	3.27	8.61	3	13	1.43	27.15	7.07	$7.21	$21.38	18.78	***102.7***	$28.59
7	27.125	0.26	4	36	117.66	3.27	8.61	4	5	1.00	16.65	5.52	$5.63	$21.38	15.84	***86.6***	$27.01
7	27.125	0.26	4	36	117.66	3.27	8.61	4	7	1.40	24.76	6.86	$7.00	$21.38	18.17	***99.4***	$28.38
7	27.125	0.26	4	36	117.66	3.27	8.61	4	9	1.80	32.71	8.20	$8.36	$21.38	20.12	***110.1***	$29.74
7	27.125	0.26	4	36	117.66	3.27	8.61	4	11	2.20	40.53	9.53	$9.72	$21.38	21.84	***119.5***	$31.10
7	27.125	0.26	4	36	117.66	3.27	8.61	4	13	2.60	48.18	10.87	$11.08	$21.38	23.37	***127.9***	$32.46
7	27.125	0.26	4	36	117.66	3.27	8.61	5	5	1.55	25.56	7.40	$7.55	$21.38	18.37	***100.5***	$28.93
7	27.125	0.26	4	36	117.66	3.27	8.61	5	7	2.17	37.79	9.48	$9.67	$21.38	21.26	***116.3***	$31.05
7	27.125	0.26	4	36	117.66	3.27	8.61	5	9	2.79	49.71	11.57	$11.80	$21.38	23.66	***129.5***	$33.18
7	27.125	0.26	4	36	117.66	3.27	8.61	5	11	3.41	61.21	13.66	$13.93	$21.38	25.74	***140.8***	$35.31
7	27.125	0.26	4	36	117.66	3.27	8.61	5	13	4.03	71.82	15.74	$16.06	$21.38	27.49	***150.4***	$37.44
7	27.125	0.26	4	36	117.66	3.27	8.61	6	5	2.20	35.85	9.69	$9.89	$21.38	20.83	***114.0***	$31.27
7	27.125	0.26	4	36	117.66	3.27	8.61	6	7	3.08	52.71	12.70	$12.95	$21.38	24.23	***132.5***	$34.33
7	27.125	0.26	4	36	117.66	3.27	8.61	6	9	3.96	68.50	15.70	$16.02	$21.38	26.95	***147.5***	$37.39
7	27.125	0.26	4	36	117.66	3.27	8.61	6	11	4.84	82.88	18.71	$19.08	$21.38	29.18	***159.6***	$40.46
7	27.125	0.26	4	36	117.66	3.27	8.61	6	13	5.72	96.88	21.71	$22.14	$21.38	31.18	***170.6***	$43.52

White Text - inadequate temperature and shrinkage steel
Italic Text - inadequate structural capacity
Highlighted Row - good design – valid for use

1 in. = 25.4 mm
1 ft = 0.3048 m
1 kip = 4.448 kN

Table A-1 (continued). Interior Section Strength and Cost Calculations for All Configurations

Top Width (in)	Base Width (in)	Concrete Volume (yd^3 / ft)	Stirrups					Longitudinal Steel				Weight of Steel (lb / ft)	Cost of Steel ($ / ft)	Cost of Concrete ($ / ft)	Yield Line Calculations		Total Cost ($ / ft)
			Bar #	Spacing (in)	Length (in)	Length / ft (ft / ft)	M_C (k-ft / ft)	Bar #	Quantity	A_s (in^2)	M_w (k-ft / ft)				L_{CR} (ft)	ΦR_w (kips)	
7	27.125	0.26	5	12	118.35	9.86	38.92	3	5	0.55	9.24	12.17	$12.41	$21.38	9.59	237.1	$33.79
7	27.125	0.26	5	12	118.35	9.86	38.92	3	7	0.77	13.76	12.92	$13.18	$21.38	10.22	252.7	$34.56
7	27.125	0.26	5	12	118.35	9.86	38.92	3	9	0.99	18.29	13.67	$13.94	$21.38	10.80	266.9	$35.32
7	27.125	0.26	5	12	118.35	9.86	38.92	3	11	1.21	22.74	14.42	$14.71	$21.38	11.32	279.8	$36.09
7	27.125	0.26	5	12	118.35	9.86	38.92	3	13	1.43	27.15	15.17	$15.48	$21.38	11.80	291.7	$36.86
7	27.125	0.26	5	12	118.35	9.86	38.92	4	5	1.00	16.65	13.63	$13.90	$21.38	10.59	261.9	$35.28
7	27.125	0.26	5	12	118.35	9.86	38.92	4	7	1.40	24.76	14.96	$15.26	$21.38	11.54	285.3	$36.64
7	27.125	0.26	5	12	118.35	9.86	38.92	4	9	1.80	32.71	16.30	$16.62	$21.38	12.36	305.7	$38.00
7	27.125	0.26	5	12	118.35	9.86	38.92	4	11	2.20	40.53	17.63	$17.99	$21.38	13.10	324.0	$39.37
7	27.125	0.26	5	12	118.35	9.86	38.92	4	13	2.60	48.18	18.97	$19.35	$21.38	13.77	340.5	$40.73
7	27.125	0.26	5	12	118.35	9.86	38.92	5	5	1.55	25.56	15.50	$15.81	$21.38	11.63	287.5	$37.19
7	27.125	0.26	5	12	118.35	9.86	38.92	5	7	2.17	37.79	17.59	$17.94	$21.38	12.85	317.8	$39.32
7	27.125	0.26	5	12	118.35	9.86	38.92	5	9	2.79	49.71	19.67	$20.07	$21.38	13.90	343.7	$41.45
7	27.125	0.26	5	12	118.35	9.86	38.92	5	11	3.41	61.21	21.76	$22.19	$21.38	14.82	366.3	$43.57
7	27.125	0.26	5	12	118.35	9.86	38.92	5	13	4.03	71.82	23.85	$24.32	$21.38	15.60	385.7	$45.70
7	27.125	0.26	5	12	118.35	9.86	38.92	6	5	2.20	35.85	17.80	$18.15	$21.38	12.67	313.2	$39.53
7	27.125	0.26	5	12	118.35	9.86	38.92	6	7	3.08	52.71	20.80	$21.22	$21.38	14.15	349.8	$42.60
7	27.125	0.26	5	12	118.35	9.86	38.92	6	9	3.96	68.50	23.80	$24.28	$21.38	15.36	379.7	$45.66
7	27.125	0.26	5	12	118.35	9.86	38.92	6	11	4.84	82.88	26.81	$27.34	$21.38	16.36	404.5	$48.72
7	27.125	0.26	5	12	118.35	9.86	38.92	6	13	5.72	96.88	29.81	$30.41	$21.38	17.26	426.8	$51.79
7	27.125	0.26	5	18	118.35	6.58	26.22	3	5	0.55	9.24	8.74	$8.91	$21.38	10.21	***170.2***	$30.29
7	27.125	0.26	5	18	118.35	6.58	26.22	3	7	0.77	13.76	9.49	$9.68	$21.38	11.05	***184.1***	$31.06
7	27.125	0.26	5	18	118.35	6.58	26.22	3	9	0.99	18.29	10.24	$10.45	$21.38	11.80	***196.5***	$31.83
7	27.125	0.26	5	18	118.35	6.58	26.22	3	11	1.21	22.74	10.99	$11.21	$21.38	12.47	***207.7***	$32.59
7	27.125	0.26	5	18	118.35	6.58	26.22	3	13	1.43	27.15	11.75	$11.98	$21.38	13.08	217.9	$33.36
7	27.125	0.26	5	18	118.35	6.58	26.22	4	5	1.00	16.65	10.20	$10.40	$21.38	11.53	***192.2***	$31.78
7	27.125	0.26	5	18	118.35	6.58	26.22	4	7	1.40	24.76	11.53	$11.76	$21.38	12.76	***212.5***	$33.14
7	27.125	0.26	5	18	118.35	6.58	26.22	4	9	1.80	32.71	12.87	$13.13	$21.38	13.80	229.9	$34.51
7	27.125	0.26	5	18	118.35	6.58	26.22	4	11	2.20	40.53	14.21	$14.49	$21.38	14.74	245.5	$35.87
7	27.125	0.26	5	18	118.35	6.58	26.22	4	13	2.60	48.18	15.54	$15.85	$21.38	15.58	259.5	$37.23
7	27.125	0.26	5	18	118.35	6.58	26.22	5	5	1.55	25.56	12.07	$12.31	$21.38	12.87	***214.3***	$33.69
7	27.125	0.26	5	18	118.35	6.58	26.22	5	7	2.17	37.79	14.16	$14.44	$21.38	14.42	240.2	$35.82
7	27.125	0.26	5	18	118.35	6.58	26.22	5	9	2.79	49.71	16.24	$16.57	$21.38	15.74	262.1	$37.95
7	27.125	0.26	5	18	118.35	6.58	26.22	5	11	3.41	61.21	18.33	$18.70	$21.38	16.88	281.2	$40.08
7	27.125	0.26	5	18	118.35	6.58	26.22	5	13	4.03	71.82	20.42	$20.83	$21.38	17.85	297.4	$42.20
7	27.125	0.26	5	18	118.35	6.58	26.22	6	5	2.20	35.85	14.37	$14.66	$21.38	14.19	236.4	$36.03
7	27.125	0.26	5	18	118.35	6.58	26.22	6	7	3.08	52.71	17.37	$17.72	$21.38	16.05	267.3	$39.10
7	27.125	0.26	5	18	118.35	6.58	26.22	6	9	3.96	68.50	20.38	$20.78	$21.38	17.56	292.5	$42.16
7	27.125	0.26	5	18	118.35	6.58	26.22	6	11	4.84	82.88	23.38	$23.85	$21.38	18.80	313.2	$45.23
7	27.125	0.26	5	18	118.35	6.58	26.22	6	13	5.72	96.88	26.38	$26.91	$21.38	19.91	331.8	$48.29

White Text - inadequate temperature and shrinkage steel
Italic Text - inadequate structural capacity
Highlighted Row - good design – valid for use

1 in. = 25.4 mm
1 ft = 0.3048 m
1 kip = 4.448 kN

Table A-1 (continued). Interior Section Strength and Cost Calculations for All Configurations

Top Width (in)	Base Width (in)	Concrete Volume (yd^3 / ft)	Stirrups					Longitudinal Steel				Weight of Steel (lb / ft)	Cost of Steel ($ / ft)	Cost of Concrete ($ / ft)	Yield Line Calculations		Total Cost ($ / ft)
			Bar #	Spacing (in)	Length (in)	Length / ft (ft / ft)	M_C (k-ft / ft)	Bar #	Quantity	A_s (in^2)	M_w (k-ft / ft)				L_{CR} (ft)	ΦR_w (kips)	
7	27.125	0.26	5	24	118.35	4.93	19.79	3	5	0.55	9.24	7.02	$7.16	$21.38	10.78	***135.5***	$28.54
7	27.125	0.26	5	24	118.35	4.93	19.79	3	7	0.77	13.76	7.78	$7.93	$21.38	11.79	***148.2***	$29.31
7	27.125	0.26	5	24	118.35	4.93	19.79	3	9	0.99	18.29	8.53	$8.70	$21.38	12.68	***159.4***	$30.08
7	27.125	0.26	5	24	118.35	4.93	19.79	3	11	1.21	22.74	9.28	$9.46	$21.38	13.47	***169.4***	$30.84
7	27.125	0.26	5	24	118.35	4.93	19.79	3	13	1.43	27.15	10.03	$10.23	$21.38	14.20	***178.6***	$31.61
7	27.125	0.26	5	24	118.35	4.93	19.79	4	5	1.00	16.65	8.48	$8.65	$21.38	12.37	***155.5***	$30.03
7	27.125	0.26	5	24	118.35	4.93	19.79	4	7	1.40	24.76	9.82	$10.02	$21.38	13.82	***173.7***	$31.40
7	27.125	0.26	5	24	118.35	4.93	19.79	4	9	1.80	32.71	11.16	$11.38	$21.38	15.05	***189.2***	$32.76
7	27.125	0.26	5	24	118.35	4.93	19.79	4	11	2.20	40.53	12.49	$12.74	$21.38	16.15	***203.0***	$34.12
7	27.125	0.26	5	24	118.35	4.93	19.79	4	13	2.60	48.18	13.83	$14.10	$21.38	17.13	215.4	$35.48
7	27.125	0.26	5	24	118.35	4.93	19.79	5	5	1.55	25.56	10.36	$10.57	$21.38	13.95	***175.4***	$31.94
7	27.125	0.26	5	24	118.35	4.93	19.79	5	7	2.17	37.79	12.44	$12.69	$21.38	15.77	***198.3***	$34.07
7	27.125	0.26	5	24	118.35	4.93	19.79	5	9	2.79	49.71	14.53	$14.82	$21.38	17.32	217.7	$36.20
7	27.125	0.26	5	24	118.35	4.93	19.79	5	11	3.41	61.21	16.62	$16.95	$21.38	18.65	234.5	$38.33
7	27.125	0.26	5	24	118.35	4.93	19.79	5	13	4.03	71.82	18.70	$19.08	$21.38	19.78	248.7	$40.46
7	27.125	0.26	5	24	118.35	4.93	19.79	6	5	2.20	35.85	12.65	$12.91	$21.38	15.50	***194.9***	$34.29
7	27.125	0.26	5	24	118.35	4.93	19.79	6	7	3.08	52.71	15.66	$15.97	$21.38	17.68	222.2	$37.35
7	27.125	0.26	5	24	118.35	4.93	19.79	6	9	3.96	68.50	18.66	$19.03	$21.38	19.44	244.4	$40.41
7	27.125	0.26	5	24	118.35	4.93	19.79	6	11	4.84	82.88	21.67	$22.10	$21.38	20.88	262.5	$43.48
7	27.125	0.26	5	24	118.35	4.93	19.79	6	13	5.72	96.88	24.67	$25.16	$21.38	22.18	278.8	$46.54
7	27.125	0.26	5	30	118.35	3.95	15.90	3	5	0.55	9.24	5.99	$6.11	$21.38	11.30	***114.2***	$27.49
7	27.125	0.26	5	30	118.35	3.95	15.90	3	7	0.77	13.76	6.75	$6.88	$21.38	12.46	***125.9***	$28.26
7	27.125	0.26	5	30	118.35	3.95	15.90	3	9	0.99	18.29	7.50	$7.65	$21.38	13.48	***136.2***	$29.03
7	27.125	0.26	5	30	118.35	3.95	15.90	3	11	1.21	22.74	8.25	$8.42	$21.38	14.38	***145.3***	$29.80
7	27.125	0.26	5	30	118.35	3.95	15.90	3	13	1.43	27.15	9.00	$9.18	$21.38	15.21	***153.6***	$30.56
7	27.125	0.26	5	30	118.35	3.95	15.90	4	5	1.00	16.65	7.45	$7.60	$21.38	13.12	***132.6***	$28.98
7	27.125	0.26	5	30	118.35	3.95	15.90	4	7	1.40	24.76	8.79	$8.97	$21.38	14.77	***149.2***	$30.35
7	27.125	0.26	5	30	118.35	3.95	15.90	4	9	1.80	32.71	10.13	$10.33	$21.38	16.17	***163.3***	$31.71
7	27.125	0.26	5	30	118.35	3.95	15.90	4	11	2.20	40.53	11.46	$11.69	$21.38	17.41	***175.8***	$33.07
7	27.125	0.26	5	30	118.35	3.95	15.90	4	13	2.60	48.18	12.80	$13.05	$21.38	18.51	***187.0***	$34.43
7	27.125	0.26	5	30	118.35	3.95	15.90	5	5	1.55	25.56	9.33	$9.52	$21.38	14.92	***150.7***	$30.90
7	27.125	0.26	5	30	118.35	3.95	15.90	5	7	2.17	37.79	11.42	$11.64	$21.38	16.99	***171.6***	$33.02
7	27.125	0.26	5	30	118.35	3.95	15.90	5	9	2.79	49.71	13.50	$13.77	$21.38	18.72	***189.1***	$35.15
7	27.125	0.26	5	30	118.35	3.95	15.90	5	11	3.41	61.21	15.59	$15.90	$21.38	20.22	***204.3***	$37.28
7	27.125	0.26	5	30	118.35	3.95	15.90	5	13	4.03	71.82	17.67	$18.03	$21.38	21.50	217.1	$39.41
7	27.125	0.26	5	30	118.35	3.95	15.90	6	5	2.20	35.85	11.62	$11.86	$21.38	16.68	***168.5***	$33.24
7	27.125	0.26	5	30	118.35	3.95	15.90	6	7	3.08	52.71	14.63	$14.92	$21.38	19.13	***193.2***	$36.30
7	27.125	0.26	5	30	118.35	3.95	15.90	6	9	3.96	68.50	17.63	$17.99	$21.38	21.11	***213.2***	$39.36
7	27.125	0.26	5	30	118.35	3.95	15.90	6	11	4.84	82.88	20.64	$21.05	$21.38	22.73	229.6	$42.43
7	27.125	0.26	5	30	118.35	3.95	15.90	6	13	5.72	96.88	23.64	$24.11	$21.38	24.18	244.3	$45.49

White Text - inadequate temperature and shrinkage steel
Italic Text - inadequate structural capacity
Highlighted Row - good design – valid for use

1 in. = 25.4 mm
1 ft = 0.3048 m
1 kip = 4.448 kN

Table A-1 (continued). Interior Section Strength and Cost Calculations for All Configurations

Top Width (in)	Base Width (in)	Concrete Volume (yd^3 / ft)	Stirrups					Longitudinal Steel				Weight of Steel (lb / ft)	Cost of Steel ($ / ft)	Cost of Concrete ($ / ft)	Yield Line Calculations		Total Cost ($ / ft)
			Bar #	Spacing (in)	Length (in)	Length / ft (ft / ft)	M_C (k-ft / ft)	Bar #	Quantity	A_s (in^2)	M_w (k-ft / ft)				L_{CR} (ft)	ΦR_w (kips)	
7	27.125	0.26	5	36	118.35	3.29	13.28	3	5	0.55	9.24	5.31	$5.42	$21.38	11.79	***99.4***	$26.79
7	27.125	0.26	5	36	118.35	3.29	13.28	3	7	0.77	13.76	6.06	$6.18	$21.38	13.09	***110.4***	$27.56
7	27.125	0.26	5	36	118.35	3.29	13.28	3	9	0.99	18.29	6.81	$6.95	$21.38	14.22	***120.0***	$28.33
7	27.125	0.26	5	36	118.35	3.29	13.28	3	11	1.21	22.74	7.56	$7.72	$21.38	15.22	***128.4***	$29.10
7	27.125	0.26	5	36	118.35	3.29	13.28	3	13	1.43	27.15	8.32	$8.48	$21.38	16.14	***136.1***	$29.86
7	27.125	0.26	5	36	118.35	3.29	13.28	4	5	1.00	16.65	6.77	$6.90	$21.38	13.82	***116.6***	$28.28
7	27.125	0.26	5	36	118.35	3.29	13.28	4	7	1.40	24.76	8.10	$8.27	$21.38	15.65	***132.0***	$29.65
7	27.125	0.26	5	36	118.35	3.29	13.28	4	9	1.80	32.71	9.44	$9.63	$21.38	17.20	***145.1***	$31.01
7	27.125	0.26	5	36	118.35	3.29	13.28	4	11	2.20	40.53	10.78	$10.99	$21.38	18.56	***156.6***	$32.37
7	27.125	0.26	5	36	118.35	3.29	13.28	4	13	2.60	48.18	12.11	$12.36	$21.38	19.78	***166.9***	$33.73
7	27.125	0.26	5	36	118.35	3.29	13.28	5	5	1.55	25.56	8.64	$8.82	$21.38	15.82	***133.4***	$30.20
7	27.125	0.26	5	36	118.35	3.29	13.28	5	7	2.17	37.79	10.73	$10.94	$21.38	18.10	***152.7***	$32.32
7	27.125	0.26	5	36	118.35	3.29	13.28	5	9	2.79	49.71	12.82	$13.07	$21.38	20.01	***168.8***	$34.45
7	27.125	0.26	5	36	118.35	3.29	13.28	5	11	3.41	61.21	14.90	$15.20	$21.38	21.66	***182.7***	$36.58
7	27.125	0.26	5	36	118.35	3.29	13.28	5	13	4.03	71.82	16.99	$17.33	$21.38	23.06	***194.5***	$38.71
7	27.125	0.26	5	36	118.35	3.29	13.28	6	5	2.20	35.85	10.94	$11.16	$21.38	17.76	***149.8***	$32.54
7	27.125	0.26	5	36	118.35	3.29	13.28	6	7	3.08	52.71	13.94	$14.22	$21.38	20.46	***172.6***	$35.60
7	27.125	0.26	5	36	118.35	3.29	13.28	6	9	3.96	68.50	16.95	$17.29	$21.38	22.64	***190.9***	$38.67
7	27.125	0.26	5	36	118.35	3.29	13.28	6	11	4.84	82.88	19.95	$20.35	$21.38	24.42	***206.0***	$41.73
7	27.125	0.26	5	36	118.35	3.29	13.28	6	13	5.72	96.88	22.95	$23.41	$21.38	26.01	219.4	$44.79
7	27.125	0.26	6	12	134.24	11.19	54.33	3	5	0.55	9.24	18.68	$19.06	$21.38	9.19	317.2	$40.44
7	27.125	0.26	6	12	134.24	11.19	54.33	3	7	0.77	13.76	19.43	$19.82	$21.38	9.68	334.2	$41.20
7	27.125	0.26	6	12	134.24	11.19	54.33	3	9	0.99	18.29	20.19	$20.59	$21.38	10.13	349.8	$41.97
7	27.125	0.26	6	12	134.24	11.19	54.33	3	11	1.21	22.74	20.94	$21.36	$21.38	10.55	364.1	$42.74
7	27.125	0.26	6	12	134.24	11.19	54.33	3	13	1.43	27.15	21.69	$22.12	$21.38	10.93	377.4	$43.50
7	27.125	0.26	6	12	134.24	11.19	54.33	4	5	1.00	16.65	20.14	$20.55	$21.38	9.97	344.2	$41.92
7	27.125	0.26	6	12	134.24	11.19	54.33	4	7	1.40	24.76	21.48	$21.91	$21.38	10.73	370.3	$43.29
7	27.125	0.26	6	12	134.24	11.19	54.33	4	9	1.80	32.71	22.81	$23.27	$21.38	11.39	393.3	$44.65
7	27.125	0.26	6	12	134.24	11.19	54.33	4	11	2.20	40.53	24.15	$24.63	$21.38	11.99	414.0	$46.01
7	27.125	0.26	6	12	134.24	11.19	54.33	4	13	2.60	48.18	25.49	$26.00	$21.38	12.54	432.9	$47.38
7	27.125	0.26	6	12	134.24	11.19	54.33	5	5	1.55	25.56	22.02	$22.46	$21.38	10.80	372.7	$43.84
7	27.125	0.26	6	12	134.24	11.19	54.33	5	7	2.17	37.79	24.10	$24.59	$21.38	11.79	406.9	$45.96
7	27.125	0.26	6	12	134.24	11.19	54.33	5	9	2.79	49.71	26.19	$26.71	$21.38	12.65	436.5	$48.09
7	27.125	0.26	6	12	134.24	11.19	54.33	5	11	3.41	61.21	28.28	$28.84	$21.38	13.40	462.5	$50.22
7	27.125	0.26	6	12	134.24	11.19	54.33	5	13	4.03	71.82	30.36	$30.97	$21.38	14.04	484.8	$52.35
7	27.125	0.26	6	12	134.24	11.19	54.33	6	5	2.20	35.85	24.31	$24.80	$21.38	11.64	401.8	$46.18
7	27.125	0.26	6	12	134.24	11.19	54.33	6	7	3.08	52.71	27.32	$27.86	$21.38	12.85	443.5	$49.24
7	27.125	0.26	6	12	134.24	11.19	54.33	6	9	3.96	68.50	30.32	$30.93	$21.38	13.85	478.0	$52.31
7	27.125	0.26	6	12	134.24	11.19	54.33	6	11	4.84	82.88	33.32	$33.99	$21.38	14.68	506.6	$55.37
7	27.125	0.26	6	12	134.24	11.19	54.33	6	13	5.72	96.88	36.33	$37.05	$21.38	15.42	532.4	$58.43

White Text - inadequate temperature and shrinkage steel
Italic Text - inadequate structural capacity
Highlighted Row - good design – valid for use

1 in. = 25.4 mm
1 ft = 0.3048 m
1 kip = 4.448 kN

Table A-1 (continued). Interior Section Strength and Cost Calculations for All Configurations

Top Width (in)	Base Width (in)	Concrete Volume (yd^3 / ft)	Stirrups					Longitudinal Steel				Weight of Steel (lb / ft)	Cost of Steel ($ / ft)	Cost of Concrete ($ / ft)	Yield Line Calculations		Total Cost ($ / ft)
			Bar #	Spacing (in)	Length (in)	Length / ft (ft / ft)	M_C (k-ft / ft)	Bar #	Quantity	A_s (in^2)	M_w (k-ft / ft)				L_{CR} (ft)	ΦR_w (kips)	
7	27.125	0.26	6	18	134.24	7.46	36.89	3	5	0.55	9.24	13.08	$13.34	$21.38	9.66	226.5	$34.72
7	27.125	0.26	6	18	134.24	7.46	36.89	3	7	0.77	13.76	13.83	$14.11	$21.38	10.32	241.9	$35.49
7	27.125	0.26	6	18	134.24	7.46	36.89	3	9	0.99	18.29	14.59	$14.88	$21.38	10.92	255.9	$36.26
7	27.125	0.26	6	18	134.24	7.46	36.89	3	11	1.21	22.74	15.34	$15.64	$21.38	11.46	268.5	$37.02
7	27.125	0.26	6	18	134.24	7.46	36.89	3	13	1.43	27.15	16.09	$16.41	$21.38	11.95	280.1	$37.79
7	27.125	0.26	6	18	134.24	7.46	36.89	4	5	1.00	16.65	14.54	$14.83	$21.38	10.71	250.9	$36.21
7	27.125	0.26	6	18	134.24	7.46	36.89	4	7	1.40	24.76	15.88	$16.20	$21.38	11.69	273.9	$37.57
7	27.125	0.26	6	18	134.24	7.46	36.89	4	9	1.80	32.71	17.21	$17.56	$21.38	12.54	293.9	$38.94
7	27.125	0.26	6	18	134.24	7.46	36.89	4	11	2.20	40.53	18.55	$18.92	$21.38	13.30	311.8	$40.30
7	27.125	0.26	6	18	134.24	7.46	36.89	4	13	2.60	48.18	19.89	$20.28	$21.38	13.99	327.9	$41.66
7	27.125	0.26	6	18	134.24	7.46	36.89	5	5	1.55	25.56	16.42	$16.74	$21.38	11.78	276.0	$38.12
7	27.125	0.26	6	18	134.24	7.46	36.89	5	7	2.17	37.79	18.50	$18.87	$21.38	13.04	305.7	$40.25
7	27.125	0.26	6	18	134.24	7.46	36.89	5	9	2.79	49.71	20.59	$21.00	$21.38	14.13	331.0	$42.38
7	27.125	0.26	6	18	134.24	7.46	36.89	5	11	3.41	61.21	22.67	$23.13	$21.38	15.07	353.2	$44.51
7	27.125	0.26	6	18	134.24	7.46	36.89	5	13	4.03	71.82	24.76	$25.26	$21.38	15.88	372.1	$46.64
7	27.125	0.26	6	18	134.24	7.46	36.89	6	5	2.20	35.85	18.71	$19.09	$21.38	12.86	301.3	$40.47
7	27.125	0.26	6	18	134.24	7.46	36.89	6	7	3.08	52.71	21.72	$22.15	$21.38	14.38	337.0	$43.53
7	27.125	0.26	6	18	134.24	7.46	36.89	6	9	3.96	68.50	24.72	$25.21	$21.38	15.63	366.3	$46.59
7	27.125	0.26	6	18	134.24	7.46	36.89	6	11	4.84	82.88	27.72	$28.28	$21.38	16.66	390.5	$49.66
7	27.125	0.26	6	18	134.24	7.46	36.89	6	13	5.72	96.88	30.73	$31.34	$21.38	17.59	412.2	$52.72
7	27.125	0.26	6	24	134.24	5.59	27.88	3	5	0.55	9.24	10.28	$10.49	$21.38	10.11	***179.0***	$31.87
7	27.125	0.26	6	24	134.24	5.59	27.88	3	7	0.77	13.76	11.03	$11.25	$21.38	10.91	***193.2***	$32.63
7	27.125	0.26	6	24	134.24	5.59	27.88	3	9	0.99	18.29	11.79	$12.02	$21.38	11.63	***205.9***	$33.40
7	27.125	0.26	6	24	134.24	5.59	27.88	3	11	1.21	22.74	12.54	$12.79	$21.38	12.27	217.3	$34.17
7	27.125	0.26	6	24	134.24	5.59	27.88	3	13	1.43	27.15	13.29	$13.55	$21.38	12.86	227.8	$34.93
7	27.125	0.26	6	24	134.24	5.59	27.88	4	5	1.00	16.65	11.74	$11.98	$21.38	11.37	***201.4***	$33.36
7	27.125	0.26	6	24	134.24	5.59	27.88	4	7	1.40	24.76	13.08	$13.34	$21.38	12.55	222.2	$34.72
7	27.125	0.26	6	24	134.24	5.59	27.88	4	9	1.80	32.71	14.41	$14.70	$21.38	13.56	240.1	$36.08
7	27.125	0.26	6	24	134.24	5.59	27.88	4	11	2.20	40.53	15.75	$16.06	$21.38	14.46	256.0	$37.44
7	27.125	0.26	6	24	134.24	5.59	27.88	4	13	2.60	48.18	17.09	$17.43	$21.38	15.27	270.4	$38.81
7	27.125	0.26	6	24	134.24	5.59	27.88	5	5	1.55	25.56	13.62	$13.89	$21.38	12.65	224.1	$35.27
7	27.125	0.26	6	24	134.24	5.59	27.88	5	7	2.17	37.79	15.70	$16.02	$21.38	14.15	250.6	$37.40
7	27.125	0.26	6	24	134.24	5.59	27.88	5	9	2.79	49.71	17.79	$18.14	$21.38	15.42	273.1	$39.52
7	27.125	0.26	6	24	134.24	5.59	27.88	5	11	3.41	61.21	19.87	$20.27	$21.38	16.53	292.7	$41.65
7	27.125	0.26	6	24	134.24	5.59	27.88	5	13	4.03	71.82	21.96	$22.40	$21.38	17.47	309.4	$43.78
7	27.125	0.26	6	24	134.24	5.59	27.88	6	5	2.20	35.85	15.91	$16.23	$21.38	13.93	246.7	$37.61
7	27.125	0.26	6	24	134.24	5.59	27.88	6	7	3.08	52.71	18.92	$19.29	$21.38	15.72	278.4	$40.67
7	27.125	0.26	6	24	134.24	5.59	27.88	6	9	3.96	68.50	21.92	$22.36	$21.38	17.18	304.3	$43.74
7	27.125	0.26	6	24	134.24	5.59	27.88	6	11	4.84	82.88	24.92	$25.42	$21.38	18.39	325.6	$46.80
7	27.125	0.26	6	24	134.24	5.59	27.88	6	13	5.72	96.88	27.93	$28.49	$21.38	19.47	344.7	$49.87

White Text - inadequate temperature and shrinkage steel
Italic Text - inadequate structural capacity
Highlighted Row - good design – valid for use

1 in. = 25.4 mm
1 ft = 0.3048 m
1 kip = 4.448 kN

Table A-1 (continued). Interior Section Strength and Cost Calculations for All Configurations

Top Width (in)	Base Width (in)	Concrete Volume (yd^3 / ft)	Stirrups					Longitudinal Steel				Weight of Steel (lb / ft)	Cost of Steel ($ / ft)	Cost of Concrete ($ / ft)	Yield Line Calculations		Total Cost ($ / ft)
			Bar #	Spacing (in)	Length (in)	Length / ft (ft / ft)	M_C (k-ft / ft)	Bar #	Quantity	A_s (in^2)	M_w (k-ft / ft)				L_{CR} (ft)	ΦR_w (kips)	
7	27.125	0.26	6	30	134.24	4.47	22.43	3	5	0.55	9.24	8.60	$8.77	$21.38	10.51	***149.9***	$30.15
7	27.125	0.26	6	30	134.24	4.47	22.43	3	7	0.77	13.76	9.35	$9.54	$21.38	11.44	***163.1***	$30.92
7	27.125	0.26	6	30	134.24	4.47	22.43	3	9	0.99	18.29	10.10	$10.31	$21.38	12.27	***174.9***	$31.69
7	27.125	0.26	6	30	134.24	4.47	22.43	3	11	1.21	22.74	10.86	$11.07	$21.38	13.00	***185.3***	$32.45
7	27.125	0.26	6	30	134.24	4.47	22.43	3	13	1.43	27.15	11.61	$11.84	$21.38	13.68	***195.0***	$33.22
7	27.125	0.26	6	30	134.24	4.47	22.43	4	5	1.00	16.65	10.06	$10.26	$21.38	11.98	***170.7***	$31.64
7	27.125	0.26	6	30	134.24	4.47	22.43	4	7	1.40	24.76	11.40	$11.62	$21.38	13.32	***189.9***	$33.00
7	27.125	0.26	6	30	134.24	4.47	22.43	4	9	1.80	32.71	12.73	$12.99	$21.38	14.47	***206.2***	$34.37
7	27.125	0.26	6	30	134.24	4.47	22.43	4	11	2.20	40.53	14.07	$14.35	$21.38	15.49	220.8	$35.73
7	27.125	0.26	6	30	134.24	4.47	22.43	4	13	2.60	48.18	15.40	$15.71	$21.38	16.41	233.8	$37.09
7	27.125	0.26	6	30	134.24	4.47	22.43	5	5	1.55	25.56	11.94	$12.17	$21.38	13.44	***191.6***	$33.55
7	27.125	0.26	6	30	134.24	4.47	22.43	5	7	2.17	37.79	14.02	$14.30	$21.38	15.14	215.8	$35.68
7	27.125	0.26	6	30	134.24	4.47	22.43	5	9	2.79	49.71	16.11	$16.43	$21.38	16.58	236.3	$37.81
7	27.125	0.26	6	30	134.24	4.47	22.43	5	11	3.41	61.21	18.19	$18.56	$21.38	17.83	254.1	$39.94
7	27.125	0.26	6	30	134.24	4.47	22.43	5	13	4.03	71.82	20.28	$20.69	$21.38	18.89	269.2	$42.06
7	27.125	0.26	6	30	134.24	4.47	22.43	6	5	2.20	35.85	14.23	$14.52	$21.38	14.89	***212.2***	$35.90
7	27.125	0.26	6	30	134.24	4.47	22.43	6	7	3.08	52.71	17.23	$17.58	$21.38	16.92	241.1	$38.96
7	27.125	0.26	6	30	134.24	4.47	22.43	6	9	3.96	68.50	20.24	$20.64	$21.38	18.56	264.6	$42.02
7	27.125	0.26	6	30	134.24	4.47	22.43	6	11	4.84	82.88	23.24	$23.71	$21.38	19.91	283.8	$45.09
7	27.125	0.26	6	30	134.24	4.47	22.43	6	13	5.72	96.88	26.25	$26.77	$21.38	21.13	301.1	$48.15
7	27.125	0.26	6	36	134.24	3.73	18.75	3	5	0.55	9.24	7.48	$7.63	$21.38	10.90	***129.9***	$29.01
7	27.125	0.26	6	36	134.24	3.73	18.75	3	7	0.77	13.76	8.23	$8.40	$21.38	11.95	***142.3***	$29.78
7	27.125	0.26	6	36	134.24	3.73	18.75	3	9	0.99	18.29	8.98	$9.16	$21.38	12.87	***153.3***	$30.54
7	27.125	0.26	6	36	134.24	3.73	18.75	3	11	1.21	22.74	9.74	$9.93	$21.38	13.69	***163.1***	$31.31
7	27.125	0.26	6	36	134.24	3.73	18.75	3	13	1.43	27.15	10.49	$10.70	$21.38	14.44	***172.0***	$32.08
7	27.125	0.26	6	36	134.24	3.73	18.75	4	5	1.00	16.65	8.94	$9.12	$21.38	12.55	***149.4***	$30.50
7	27.125	0.26	6	36	134.24	3.73	18.75	4	7	1.40	24.76	10.28	$10.48	$21.38	14.04	***167.3***	$31.86
7	27.125	0.26	6	36	134.24	3.73	18.75	4	9	1.80	32.71	11.61	$11.85	$21.38	15.31	***182.4***	$33.22
7	27.125	0.26	6	36	134.24	3.73	18.75	4	11	2.20	40.53	12.95	$13.21	$21.38	16.44	***195.9***	$34.59
7	27.125	0.26	6	36	134.24	3.73	18.75	4	13	2.60	48.18	14.28	$14.57	$21.38	17.45	***207.9***	$35.95
7	27.125	0.26	6	36	134.24	3.73	18.75	5	5	1.55	25.56	10.82	$11.03	$21.38	14.18	***168.9***	$32.41
7	27.125	0.26	6	36	134.24	3.73	18.75	5	7	2.17	37.79	12.90	$13.16	$21.38	16.06	***191.3***	$34.54
7	27.125	0.26	6	36	134.24	3.73	18.75	5	9	2.79	49.71	14.99	$15.29	$21.38	17.65	***210.2***	$36.67
7	27.125	0.26	6	36	134.24	3.73	18.75	5	11	3.41	61.21	17.07	$17.42	$21.38	19.02	226.6	$38.79
7	27.125	0.26	6	36	134.24	3.73	18.75	5	13	4.03	71.82	19.16	$19.54	$21.38	20.19	240.5	$40.92
7	27.125	0.26	6	36	134.24	3.73	18.75	6	5	2.20	35.85	13.11	$13.37	$21.38	15.78	***188.0***	$34.75
7	27.125	0.26	6	36	134.24	3.73	18.75	6	7	3.08	52.71	16.11	$16.44	$21.38	18.02	214.6	$37.82
7	27.125	0.26	6	36	134.24	3.73	18.75	6	9	3.96	68.50	19.12	$19.50	$21.38	19.83	236.2	$40.88
7	27.125	0.26	6	36	134.24	3.73	18.75	6	11	4.84	82.88	22.12	$22.57	$21.38	21.32	253.9	$43.94
7	27.125	0.26	6	36	134.24	3.73	18.75	6	13	5.72	96.88	25.13	$25.63	$21.38	22.65	269.8	$47.01

White Text - inadequate temperature and shrinkage steel
Italic Text - inadequate structural capacity
Highlighted Row - good design – valid for use

1 in. = 25.4 mm
1 ft = 0.3048 m
1 kip = 4.448 kN

Table A-1 (continued). Interior Section Strength and Cost Calculations for All Configurations

Top Width (in)	Base Width (in)	Concrete Volume (yd^3 / ft)	Stirrups					Longitudinal Steel				Weight of Steel (lb / ft)	Cost of Steel ($ / ft)	Cost of Concrete ($ / ft)	Yield Line Calculations		Total Cost ($ / ft)
			Bar #	Spacing (in)	Length (in)	Length / ft (ft / ft)	M_C (k-ft / ft)	Bar #	Quantity	A_s (in^2)	M_w (k-ft / ft)				L_{CR} (ft)	ΦR_w (kips)	
8	28.125	0.27	3	12	118.59	9.88	14.67	3	5	0.55	9.62	5.60	$5.71	$22.32	11.62	***108.3***	$28.03
8	28.125	0.27	3	12	118.59	9.88	14.67	3	7	0.77	14.35	6.35	$6.47	$22.32	12.88	***120.0***	$28.79
8	28.125	0.27	3	12	118.59	9.88	14.67	3	9	0.99	19.06	7.10	$7.24	$22.32	13.97	***130.2***	$29.56
8	28.125	0.27	3	12	118.59	9.88	14.67	3	11	1.21	23.71	7.85	$8.01	$22.32	14.95	***139.3***	$30.33
8	28.125	0.27	3	12	118.59	9.88	14.67	3	13	1.43	28.32	8.60	$8.78	$22.32	15.83	***147.5***	$31.10
8	28.125	0.27	3	12	118.59	9.88	14.67	4	5	1.00	17.35	7.06	$7.20	$22.32	13.59	***126.6***	$29.52
8	28.125	0.27	3	12	118.59	9.88	14.67	4	7	1.40	25.82	8.39	$8.56	$22.32	15.36	***143.1***	$30.88
8	28.125	0.27	3	12	118.59	9.88	14.67	4	9	1.80	34.12	9.73	$9.92	$22.32	16.86	***157.1***	$32.24
8	28.125	0.27	3	12	118.59	9.88	14.67	4	11	2.20	42.29	11.06	$11.28	$22.32	18.18	***169.4***	$33.60
8	28.125	0.27	3	12	118.59	9.88	14.67	4	13	2.60	50.29	12.40	$12.65	$22.32	19.37	***180.5***	$34.97
8	28.125	0.27	3	12	118.59	9.88	14.67	5	5	1.55	26.65	8.93	$9.11	$22.32	15.52	***144.6***	$31.43
8	28.125	0.27	3	12	118.59	9.88	14.67	5	7	2.17	39.44	11.02	$11.24	$22.32	17.74	***165.3***	$33.56
8	28.125	0.27	3	12	118.59	9.88	14.67	5	9	2.79	51.88	13.10	$13.36	$22.32	19.59	***182.6***	$35.68
8	28.125	0.27	3	12	118.59	9.88	14.67	5	11	3.41	63.94	15.19	$15.49	$22.32	21.20	***197.6***	$37.81
8	28.125	0.27	3	12	118.59	9.88	14.67	5	13	4.03	75.12	17.27	$17.62	$22.32	22.57	***210.3***	$39.94
8	28.125	0.27	3	12	118.59	9.88	14.67	6	5	2.20	37.41	11.23	$11.45	$22.32	17.41	***162.2***	$33.77
8	28.125	0.27	3	12	118.59	9.88	14.67	6	7	3.08	55.03	14.23	$14.51	$22.32	20.03	***186.6***	$36.83
8	28.125	0.27	3	12	118.59	9.88	14.67	6	9	3.96	71.62	17.23	$17.58	$22.32	22.15	***206.4***	$39.90
8	28.125	0.27	3	12	118.59	9.88	14.67	6	11	4.84	86.76	20.24	$20.64	$22.32	23.90	222.7	$42.96
8	28.125	0.27	3	12	118.59	9.88	14.67	6	13	5.72	101.56	23.24	$23.71	$22.32	25.46	237.3	$46.03
8	28.125	0.27	3	18	118.59	6.59	9.83	3	5	0.55	9.62	4.36	$4.44	$22.32	12.88	***80.4***	$26.76
8	28.125	0.27	3	18	118.59	6.59	9.83	3	7	0.77	14.35	5.11	$5.21	$22.32	14.48	***90.4***	$27.53
8	28.125	0.27	3	18	118.59	6.59	9.83	3	9	0.99	19.06	5.86	$5.98	$22.32	15.85	***99.0***	$28.30
8	28.125	0.27	3	18	118.59	6.59	9.83	3	11	1.21	23.71	6.61	$6.75	$22.32	17.07	***106.6***	$29.07
8	28.125	0.27	3	18	118.59	6.59	9.83	3	13	1.43	28.32	7.37	$7.51	$22.32	18.18	***113.6***	$29.83
8	28.125	0.27	3	18	118.59	6.59	9.83	4	5	1.00	17.35	5.82	$5.93	$22.32	15.37	***96.0***	$28.25
8	28.125	0.27	3	18	118.59	6.59	9.83	4	7	1.40	25.82	7.15	$7.30	$22.32	17.59	***109.9***	$29.62
8	28.125	0.27	3	18	118.59	6.59	9.83	4	9	1.80	34.12	8.49	$8.66	$22.32	19.45	***121.5***	$30.98
8	28.125	0.27	3	18	118.59	6.59	9.83	4	11	2.20	42.29	9.83	$10.02	$22.32	21.09	***131.8***	$32.34
8	28.125	0.27	3	18	118.59	6.59	9.83	4	13	2.60	50.29	11.16	$11.38	$22.32	22.56	***140.9***	$33.70
8	28.125	0.27	3	18	118.59	6.59	9.83	5	5	1.55	26.65	7.69	$7.85	$22.32	17.79	***111.1***	$30.17
8	28.125	0.27	3	18	118.59	6.59	9.83	5	7	2.17	39.44	9.78	$9.97	$22.32	20.54	***128.3***	$32.29
8	28.125	0.27	3	18	118.59	6.59	9.83	5	9	2.79	51.88	11.86	$12.10	$22.32	22.84	***142.7***	$34.42
8	28.125	0.27	3	18	118.59	6.59	9.83	5	11	3.41	63.94	13.95	$14.23	$22.32	24.82	***155.1***	$36.55
8	28.125	0.27	3	18	118.59	6.59	9.83	5	13	4.03	75.12	16.04	$16.36	$22.32	26.51	***165.6***	$38.68
8	28.125	0.27	3	18	118.59	6.59	9.83	6	5	2.20	37.41	9.99	$10.19	$22.32	20.14	***125.8***	$32.51
8	28.125	0.27	3	18	118.59	6.59	9.83	6	7	3.08	55.03	12.99	$13.25	$22.32	23.38	***146.0***	$35.57
8	28.125	0.27	3	18	118.59	6.59	9.83	6	9	3.96	71.62	16.00	$16.32	$22.32	25.99	***162.4***	$38.63
8	28.125	0.27	3	18	118.59	6.59	9.83	6	11	4.84	86.76	19.00	$19.38	$22.32	28.14	***175.8***	$41.70
8	28.125	0.27	3	18	118.59	6.59	9.83	6	13	5.72	101.56	22.00	$22.44	$22.32	30.06	***187.8***	$44.76

White Text - inadequate temperature and shrinkage steel
Italic Text - inadequate structural capacity
Highlighted Row - good design – valid for use

1 in. = 25.4 mm
1 ft = 0.3048 m
1 kip = 4.448 kN

Table A-1 (continued). Interior Section Strength and Cost Calculations for All Configurations

Top Width (in)	Base Width (in)	Concrete Volume (yd^3 / ft)	Stirrups					Longitudinal Steel				Weight of Steel (lb / ft)	Cost of Steel ($ / ft)	Cost of Concrete ($ / ft)	Yield Line Calculations		Total Cost ($ / ft)
			Bar #	Spacing (in)	Length (in)	Length / ft (ft / ft)	M_C (k-ft / ft)	Bar #	Quantity	A_s (in^2)	M_w (k-ft / ft)				L_{CR} (ft)	ΦR_w (kips)	
8	28.125	0.27	3	24	118.59	4.94	7.38	3	5	0.55	9.62	3.74	$3.81	$22.32	13.99	***65.5***	$26.13
8	28.125	0.27	3	24	118.59	4.94	7.38	3	7	0.77	14.35	4.49	$4.58	$22.32	15.87	***74.4***	$26.90
8	28.125	0.27	3	24	118.59	4.94	7.38	3	9	0.99	19.06	5.24	$5.35	$22.32	17.49	***81.9***	$27.67
8	28.125	0.27	3	24	118.59	4.94	7.38	3	11	1.21	23.71	5.99	$6.11	$22.32	18.91	***88.6***	$28.43
8	28.125	0.27	3	24	118.59	4.94	7.38	3	13	1.43	28.32	6.75	$6.88	$22.32	20.21	***94.7***	$29.20
8	28.125	0.27	3	24	118.59	4.94	7.38	4	5	1.00	17.35	5.20	$5.30	$22.32	16.93	***79.3***	$27.62
8	28.125	0.27	3	24	118.59	4.94	7.38	4	7	1.40	25.82	6.53	$6.66	$22.32	19.52	***91.5***	$28.98
8	28.125	0.27	3	24	118.59	4.94	7.38	4	9	1.80	34.12	7.87	$8.03	$22.32	21.69	***101.6***	$30.35
8	28.125	0.27	3	24	118.59	4.94	7.38	4	11	2.20	42.29	9.21	$9.39	$22.32	23.60	***110.6***	$31.71
8	28.125	0.27	3	24	118.59	4.94	7.38	4	13	2.60	50.29	10.54	$10.75	$22.32	25.31	***118.6***	$33.07
8	28.125	0.27	3	24	118.59	4.94	7.38	5	5	1.55	26.65	7.07	$7.21	$22.32	19.75	***92.5***	$29.53
8	28.125	0.27	3	24	118.59	4.94	7.38	5	7	2.17	39.44	9.16	$9.34	$22.32	22.96	***107.6***	$31.66
8	28.125	0.27	3	24	118.59	4.94	7.38	5	9	2.79	51.88	11.24	$11.47	$22.32	25.63	***120.1***	$33.79
8	28.125	0.27	3	24	118.59	4.94	7.38	5	11	3.41	63.94	13.33	$13.60	$22.32	27.93	***130.9***	$35.92
8	28.125	0.27	3	24	118.59	4.94	7.38	5	13	4.03	75.12	15.42	$15.73	$22.32	29.89	***140.0***	$38.05
8	28.125	0.27	3	24	118.59	4.94	7.38	6	5	2.20	37.41	9.37	$9.56	$22.32	22.49	***105.4***	$31.88
8	28.125	0.27	3	24	118.59	4.94	7.38	6	7	3.08	55.03	12.37	$12.62	$22.32	26.25	***123.0***	$34.94
8	28.125	0.27	3	24	118.59	4.94	7.38	6	9	3.96	71.62	15.38	$15.68	$22.32	29.29	***137.2***	$38.00
8	28.125	0.27	3	24	118.59	4.94	7.38	6	11	4.84	86.76	18.38	$18.75	$22.32	31.78	***148.9***	$41.07
8	28.125	0.27	3	24	118.59	4.94	7.38	6	13	5.72	101.56	21.38	$21.81	$22.32	34.01	***159.3***	$44.13
8	28.125	0.27	3	30	118.59	3.95	5.90	3	5	0.55	9.62	3.37	$3.43	$22.32	14.99	***56.2***	$25.75
8	28.125	0.27	3	30	118.59	3.95	5.90	3	7	0.77	14.35	4.12	$4.20	$22.32	17.12	***64.2***	$26.52
8	28.125	0.27	3	30	118.59	3.95	5.90	3	9	0.99	19.06	4.87	$4.97	$22.32	18.95	***71.0***	$27.29
8	28.125	0.27	3	30	118.59	3.95	5.90	3	11	1.21	23.71	5.62	$5.73	$22.32	20.55	***77.0***	$28.05
8	28.125	0.27	3	30	118.59	3.95	5.90	3	13	1.43	28.32	6.37	$6.50	$22.32	22.01	***82.5***	$28.82
8	28.125	0.27	3	30	118.59	3.95	5.90	4	5	1.00	17.35	4.83	$4.92	$22.32	18.31	***68.6***	$27.24
8	28.125	0.27	3	30	118.59	3.95	5.90	4	7	1.40	25.82	6.16	$6.29	$22.32	21.24	***79.6***	$28.61
8	28.125	0.27	3	30	118.59	3.95	5.90	4	9	1.80	34.12	7.50	$7.65	$22.32	23.68	***88.8***	$29.97
8	28.125	0.27	3	30	118.59	3.95	5.90	4	11	2.20	42.29	8.83	$9.01	$22.32	25.83	***96.8***	$31.33
8	28.125	0.27	3	30	118.59	3.95	5.90	4	13	2.60	50.29	10.17	$10.37	$22.32	27.74	***104.0***	$32.69
8	28.125	0.27	3	30	118.59	3.95	5.90	5	5	1.55	26.65	6.70	$6.84	$22.32	21.49	***80.6***	$29.16
8	28.125	0.27	3	30	118.59	3.95	5.90	5	7	2.17	39.44	8.79	$8.96	$22.32	25.10	***94.1***	$31.28
8	28.125	0.27	3	30	118.59	3.95	5.90	5	9	2.79	51.88	10.87	$11.09	$22.32	28.10	***105.3***	$33.41
8	28.125	0.27	3	30	118.59	3.95	5.90	5	11	3.41	63.94	12.96	$13.22	$22.32	30.68	***115.0***	$35.54
8	28.125	0.27	3	30	118.59	3.95	5.90	5	13	4.03	75.12	15.05	$15.35	$22.32	32.87	***123.2***	$37.67
8	28.125	0.27	3	30	118.59	3.95	5.90	6	5	2.20	37.41	9.00	$9.18	$22.32	24.57	***92.1***	$31.50
8	28.125	0.27	3	30	118.59	3.95	5.90	6	7	3.08	55.03	12.00	$12.24	$22.32	28.80	***107.9***	$34.56
8	28.125	0.27	3	30	118.59	3.95	5.90	6	9	3.96	71.62	15.00	$15.30	$22.32	32.21	***120.7***	$37.62
8	28.125	0.27	3	30	118.59	3.95	5.90	6	11	4.84	86.76	18.01	$18.37	$22.32	34.99	***131.2***	$40.69
8	28.125	0.27	3	30	118.59	3.95	5.90	6	13	5.72	101.56	21.01	$21.43	$22.32	37.49	***140.5***	$43.75

White Text - inadequate temperature and shrinkage steel
Italic Text - inadequate structural capacity
Highlighted Row - good design – valid for use

1 in. = 25.4 mm
1 ft = 0.3048 m
1 kip = 4.448 kN

Table A-1 (continued). Interior Section Strength and Cost Calculations for All Configurations

Top Width (in)	Base Width (in)	Concrete Volume (yd^3 / ft)	Stirrups					Longitudinal Steel				Weight of Steel (lb / ft)	Cost of Steel ($ / ft)	Cost of Concrete ($ / ft)	Yield Line Calculations		Total Cost ($ / ft)
			Bar #	Spacing (in)	Length (in)	Length / ft (ft / ft)	M_C (k-ft / ft)	Bar #	Quantity	A_s (in^2)	M_w (k-ft / ft)				L_{CR} (ft)	ΦR_w (kips)	
8	28.125	0.27	3	36	118.59	3.29	4.92	3	5	0.55	9.62	3.12	$3.18	$22.32	15.90	***49.7***	$25.50
8	28.125	0.27	3	36	118.59	3.29	4.92	3	7	0.77	14.35	3.87	$3.95	$22.32	18.26	***57.1***	$26.27
8	28.125	0.27	3	36	118.59	3.29	4.92	3	9	0.99	19.06	4.62	$4.72	$22.32	20.28	***63.3***	$27.03
8	28.125	0.27	3	36	118.59	3.29	4.92	3	11	1.21	23.71	5.37	$5.48	$22.32	22.05	***68.9***	$27.80
8	28.125	0.27	3	36	118.59	3.29	4.92	3	13	1.43	28.32	6.13	$6.25	$22.32	23.65	***73.9***	$28.57
8	28.125	0.27	3	36	118.59	3.29	4.92	4	5	1.00	17.35	4.58	$4.67	$22.32	19.58	***61.2***	$26.99
8	28.125	0.27	3	36	118.59	3.29	4.92	4	7	1.40	25.82	5.91	$6.03	$22.32	22.80	***71.2***	$28.35
8	28.125	0.27	3	36	118.59	3.29	4.92	4	9	1.80	34.12	7.25	$7.40	$22.32	25.49	***79.6***	$29.72
8	28.125	0.27	3	36	118.59	3.29	4.92	4	11	2.20	42.29	8.59	$8.76	$22.32	27.84	***87.0***	$31.08
8	28.125	0.27	3	36	118.59	3.29	4.92	4	13	2.60	50.29	9.92	$10.12	$22.32	29.94	***93.5***	$32.44
8	28.125	0.27	3	36	118.59	3.29	4.92	5	5	1.55	26.65	6.45	$6.58	$22.32	23.08	***72.1***	$28.90
8	28.125	0.27	3	36	118.59	3.29	4.92	5	7	2.17	39.44	8.54	$8.71	$22.32	27.05	***84.5***	$31.03
8	28.125	0.27	3	36	118.59	3.29	4.92	5	9	2.79	51.88	10.63	$10.84	$22.32	30.34	***94.8***	$33.16
8	28.125	0.27	3	36	118.59	3.29	4.92	5	11	3.41	63.94	12.71	$12.97	$22.32	33.18	***103.6***	$35.29
8	28.125	0.27	3	36	118.59	3.29	4.92	5	13	4.03	75.12	14.80	$15.09	$22.32	35.58	***111.1***	$37.41
8	28.125	0.27	3	36	118.59	3.29	4.92	6	5	2.20	37.41	8.75	$8.92	$22.32	26.47	***82.7***	$31.24
8	28.125	0.27	3	36	118.59	3.29	4.92	6	7	3.08	55.03	11.75	$11.99	$22.32	31.11	***97.2***	$34.31
8	28.125	0.27	3	36	118.59	3.29	4.92	6	9	3.96	71.62	14.76	$15.05	$22.32	34.85	***108.8***	$37.37
8	28.125	0.27	3	36	118.59	3.29	4.92	6	11	4.84	86.76	17.76	$18.12	$22.32	37.90	***118.4***	$40.44
8	28.125	0.27	3	36	118.59	3.29	4.92	6	13	5.72	101.56	20.76	$21.18	$22.32	40.64	***126.9***	$43.50
8	28.125	0.27	4	12	119.91	9.99	26.42	3	5	0.55	9.62	8.55	$8.73	$22.32	10.28	***172.4***	$31.05
8	28.125	0.27	4	12	119.91	9.99	26.42	3	7	0.77	14.35	9.31	$9.49	$22.32	11.13	***186.9***	$31.81
8	28.125	0.27	4	12	119.91	9.99	26.42	3	9	0.99	19.06	10.06	$10.26	$22.32	11.90	***199.6***	$32.58
8	28.125	0.27	4	12	119.91	9.99	26.42	3	11	1.21	23.71	10.81	$11.03	$22.32	12.58	***211.1***	$33.35
8	28.125	0.27	4	12	119.91	9.99	26.42	3	13	1.43	28.32	11.56	$11.79	$22.32	13.21	221.7	$34.11
8	28.125	0.27	4	12	119.91	9.99	26.42	4	5	1.00	17.35	10.01	$10.22	$22.32	11.63	***195.1***	$32.53
8	28.125	0.27	4	12	119.91	9.99	26.42	4	7	1.40	25.82	11.35	$11.58	$22.32	12.88	216.1	$33.90
8	28.125	0.27	4	12	119.91	9.99	26.42	4	9	1.80	34.12	12.69	$12.94	$22.32	13.95	234.1	$35.26
8	28.125	0.27	4	12	119.91	9.99	26.42	4	11	2.20	42.29	14.02	$14.30	$22.32	14.90	250.1	$36.62
8	28.125	0.27	4	12	119.91	9.99	26.42	4	13	2.60	50.29	15.36	$15.67	$22.32	15.76	264.5	$37.99
8	28.125	0.27	4	12	119.91	9.99	26.42	5	5	1.55	26.65	11.89	$12.13	$22.32	12.99	218.0	$34.45
8	28.125	0.27	4	12	119.91	9.99	26.42	5	7	2.17	39.44	13.98	$14.26	$22.32	14.58	244.6	$36.58
8	28.125	0.27	4	12	119.91	9.99	26.42	5	9	2.79	51.88	16.06	$16.38	$22.32	15.92	267.2	$38.70
8	28.125	0.27	4	12	119.91	9.99	26.42	5	11	3.41	63.94	18.15	$18.51	$22.32	17.09	286.9	$40.83
8	28.125	0.27	4	12	119.91	9.99	26.42	5	13	4.03	75.12	20.23	$20.64	$22.32	18.09	303.6	$42.96
8	28.125	0.27	4	12	119.91	9.99	26.42	6	5	2.20	37.41	14.18	$14.47	$22.32	14.34	240.7	$36.79
8	28.125	0.27	4	12	119.91	9.99	26.42	6	7	3.08	55.03	17.19	$17.53	$22.32	16.24	272.5	$39.85
8	28.125	0.27	4	12	119.91	9.99	26.42	6	9	3.96	71.62	20.19	$20.60	$22.32	17.79	298.5	$42.92
8	28.125	0.27	4	12	119.91	9.99	26.42	6	11	4.84	86.76	23.20	$23.66	$22.32	19.06	319.9	$45.98
8	28.125	0.27	4	12	119.91	9.99	26.42	6	13	5.72	101.56	26.20	$26.72	$22.32	20.21	339.2	$49.04

White Text - inadequate temperature and shrinkage steel
Italic Text - inadequate structural capacity
Highlighted Row - good design – valid for use

1 in. = 25.4 mm
1 ft = 0.3048 m
1 kip = 4.448 kN

Table A-1 (continued). Interior Section Strength and Cost Calculations for All Configurations

Top Width (in)	Base Width (in)	Concrete Volume (yd^3 / ft)	Stirrups					Longitudinal Steel				Weight of Steel (lb / ft)	Cost of Steel ($ / ft)	Cost of Concrete ($ / ft)	Yield Line Calculations		Total Cost ($ / ft)
			Bar #	Spacing (in)	Length (in)	Length / ft (ft / ft)	M_C (k-ft / ft)	Bar #	Quantity	A_s (in^2)	M_w (k-ft / ft)				L_{CR} (ft)	ΦR_w (kips)	
8	28.125	0.27	4	18	119.91	6.66	17.72	3	5	0.55	9.62	6.33	$6.46	$22.32	11.13	***125.3***	$28.78
8	28.125	0.27	4	18	119.91	6.66	17.72	3	7	0.77	14.35	7.08	$7.22	$22.32	12.25	***137.9***	$29.54
8	28.125	0.27	4	18	119.91	6.66	17.72	3	9	0.99	19.06	7.83	$7.99	$22.32	13.22	***148.9***	$30.31
8	28.125	0.27	4	18	119.91	6.66	17.72	3	11	1.21	23.71	8.59	$8.76	$22.32	14.09	***158.7***	$31.08
8	28.125	0.27	4	18	119.91	6.66	17.72	3	13	1.43	28.32	9.34	$9.52	$22.32	14.89	***167.7***	$31.84
8	28.125	0.27	4	18	119.91	6.66	17.72	4	5	1.00	17.35	7.79	$7.95	$22.32	12.88	***145.0***	$30.27
8	28.125	0.27	4	18	119.91	6.66	17.72	4	7	1.40	25.82	9.13	$9.31	$22.32	14.47	***162.9***	$31.63
8	28.125	0.27	4	18	119.91	6.66	17.72	4	9	1.80	34.12	10.46	$10.67	$22.32	15.82	***178.1***	$32.99
8	28.125	0.27	4	18	119.91	6.66	17.72	4	11	2.20	42.29	11.80	$12.03	$22.32	17.01	***191.5***	$34.35
8	28.125	0.27	4	18	119.91	6.66	17.72	4	13	2.60	50.29	13.13	$13.40	$22.32	18.08	***203.6***	$35.72
8	28.125	0.27	4	18	119.91	6.66	17.72	5	5	1.55	26.65	9.66	$9.86	$22.32	14.61	***164.5***	$32.18
8	28.125	0.27	4	18	119.91	6.66	17.72	5	7	2.17	39.44	11.75	$11.99	$22.32	16.61	***187.0***	$34.31
8	28.125	0.27	4	18	119.91	6.66	17.72	5	9	2.79	51.88	13.84	$14.11	$22.32	18.28	***205.8***	$36.43
8	28.125	0.27	4	18	119.91	6.66	17.72	5	11	3.41	63.94	15.92	$16.24	$22.32	19.74	222.2	$38.56
8	28.125	0.27	4	18	119.91	6.66	17.72	5	13	4.03	75.12	18.01	$18.37	$22.32	20.98	236.2	$40.69
8	28.125	0.27	4	18	119.91	6.66	17.72	6	5	2.20	37.41	11.96	$12.20	$22.32	16.31	***183.6***	$34.52
8	28.125	0.27	4	18	119.91	6.66	17.72	6	7	3.08	55.03	14.96	$15.26	$22.32	18.68	***210.3***	$37.58
8	28.125	0.27	4	18	119.91	6.66	17.72	6	9	3.96	71.62	17.97	$18.33	$22.32	20.60	231.9	$40.65
8	28.125	0.27	4	18	119.91	6.66	17.72	6	11	4.84	86.76	20.97	$21.39	$22.32	22.18	249.7	$43.71
8	28.125	0.27	4	18	119.91	6.66	17.72	6	13	5.72	101.56	23.98	$24.46	$22.32	23.60	265.7	$46.78
8	28.125	0.27	4	24	119.91	5.00	13.33	3	5	0.55	9.62	5.22	$5.32	$22.32	11.89	***100.8***	$27.64
8	28.125	0.27	4	24	119.91	5.00	13.33	3	7	0.77	14.35	5.97	$6.09	$22.32	13.23	***112.0***	$28.41
8	28.125	0.27	4	24	119.91	5.00	13.33	3	9	0.99	19.06	6.72	$6.86	$22.32	14.38	***121.8***	$29.18
8	28.125	0.27	4	24	119.91	5.00	13.33	3	11	1.21	23.71	7.47	$7.62	$22.32	15.41	***130.5***	$29.94
8	28.125	0.27	4	24	119.91	5.00	13.33	3	13	1.43	28.32	8.23	$8.39	$22.32	16.35	***138.5***	$30.71
8	28.125	0.27	4	24	119.91	5.00	13.33	4	5	1.00	17.35	6.68	$6.81	$22.32	13.98	***118.4***	$29.13
8	28.125	0.27	4	24	119.91	5.00	13.33	4	7	1.40	25.82	8.01	$8.17	$22.32	15.85	***134.2***	$30.49
8	28.125	0.27	4	24	119.91	5.00	13.33	4	9	1.80	34.12	9.35	$9.54	$22.32	17.43	***147.6***	$31.86
8	28.125	0.27	4	24	119.91	5.00	13.33	4	11	2.20	42.29	10.69	$10.90	$22.32	18.82	***159.4***	$33.22
8	28.125	0.27	4	24	119.91	5.00	13.33	4	13	2.60	50.29	12.02	$12.26	$22.32	20.07	***170.0***	$34.58
8	28.125	0.27	4	24	119.91	5.00	13.33	5	5	1.55	26.65	8.55	$8.72	$22.32	16.01	***135.7***	$31.04
8	28.125	0.27	4	24	119.91	5.00	13.33	5	7	2.17	39.44	10.64	$10.85	$22.32	18.35	***155.5***	$33.17
8	28.125	0.27	4	24	119.91	5.00	13.33	5	9	2.79	51.88	12.72	$12.98	$22.32	20.31	***172.0***	$35.30
8	28.125	0.27	4	24	119.91	5.00	13.33	5	11	3.41	63.94	14.81	$15.11	$22.32	22.00	***186.3***	$37.43
8	28.125	0.27	4	24	119.91	5.00	13.33	5	13	4.03	75.12	16.90	$17.23	$22.32	23.44	***198.5***	$39.55
8	28.125	0.27	4	24	119.91	5.00	13.33	6	5	2.20	37.41	10.85	$11.06	$22.32	18.01	***152.5***	$33.38
8	28.125	0.27	4	24	119.91	5.00	13.33	6	7	3.08	55.03	13.85	$14.13	$22.32	20.76	***175.9***	$36.45
8	28.125	0.27	4	24	119.91	5.00	13.33	6	9	3.96	71.62	16.86	$17.19	$22.32	23.00	***194.8***	$39.51
8	28.125	0.27	4	24	119.91	5.00	13.33	6	11	4.84	86.76	19.86	$20.26	$22.32	24.83	***210.3***	$42.58
8	28.125	0.27	4	24	119.91	5.00	13.33	6	13	5.72	101.56	22.86	$23.32	$22.32	26.48	224.3	$45.64

White Text - inadequate temperature and shrinkage steel
Italic Text - inadequate structural capacity
Highlighted Row - good design – valid for use

1 in. = 25.4 mm
1 ft = 0.3048 m
1 kip = 4.448 kN

Table A-1 (continued). Interior Section Strength and Cost Calculations for All Configurations

Top Width (in)	Base Width (in)	Concrete Volume (yd^3 / ft)	Stirrups					Longitudinal Steel				Weight of Steel (lb / ft)	Cost of Steel ($ / ft)	Cost of Concrete ($ / ft)	Yield Line Calculations		Total Cost ($ / ft)
			Bar #	Spacing (in)	Length (in)	Length / ft (ft / ft)	M_C (k-ft / ft)	Bar #	Quantity	A_s (in^2)	M_w (k-ft / ft)				L_{CR} (ft)	ΦR_w (kips)	
8	28.125	0.27	4	30	119.91	4.00	10.70	3	5	0.55	9.62	4.55	$4.64	$22.32	12.59	***85.6***	$26.96
8	28.125	0.27	4	30	119.91	4.00	10.70	3	7	0.77	14.35	5.30	$5.41	$22.32	14.11	***95.9***	$27.73
8	28.125	0.27	4	30	119.91	4.00	10.70	3	9	0.99	19.06	6.05	$6.17	$22.32	15.42	***104.8***	$28.49
8	28.125	0.27	4	30	119.91	4.00	10.70	3	11	1.21	23.71	6.81	$6.94	$22.32	16.58	***112.7***	$29.26
8	28.125	0.27	4	30	119.91	4.00	10.70	3	13	1.43	28.32	7.56	$7.71	$22.32	17.64	***119.9***	$30.03
8	28.125	0.27	4	30	119.91	4.00	10.70	4	5	1.00	17.35	6.01	$6.13	$22.32	14.96	***101.7***	$28.45
8	28.125	0.27	4	30	119.91	4.00	10.70	4	7	1.40	25.82	7.35	$7.49	$22.32	17.08	***116.1***	$29.81
8	28.125	0.27	4	30	119.91	4.00	10.70	4	9	1.80	34.12	8.68	$8.86	$22.32	18.86	***128.2***	$31.18
8	28.125	0.27	4	30	119.91	4.00	10.70	4	11	2.20	42.29	10.02	$10.22	$22.32	20.43	***138.9***	$32.54
8	28.125	0.27	4	30	119.91	4.00	10.70	4	13	2.60	50.29	11.35	$11.58	$22.32	21.83	***148.4***	$33.90
8	28.125	0.27	4	30	119.91	4.00	10.70	5	5	1.55	26.65	7.88	$8.04	$22.32	17.26	***117.4***	$30.36
8	28.125	0.27	4	30	119.91	4.00	10.70	5	7	2.17	39.44	9.97	$10.17	$22.32	19.90	***135.3***	$32.49
8	28.125	0.27	4	30	119.91	4.00	10.70	5	9	2.79	51.88	12.06	$12.30	$22.32	22.09	***150.2***	$34.62
8	28.125	0.27	4	30	119.91	4.00	10.70	5	11	3.41	63.94	14.14	$14.43	$22.32	23.99	***163.1***	$36.75
8	28.125	0.27	4	30	119.91	4.00	10.70	5	13	4.03	75.12	16.23	$16.55	$22.32	25.61	***174.1***	$38.87
8	28.125	0.27	4	30	119.91	4.00	10.70	6	5	2.20	37.41	10.18	$10.38	$22.32	19.51	***132.6***	$32.70
8	28.125	0.27	4	30	119.91	4.00	10.70	6	7	3.08	55.03	13.18	$13.45	$22.32	22.61	***153.7***	$35.77
8	28.125	0.27	4	30	119.91	4.00	10.70	6	9	3.96	71.62	16.19	$16.51	$22.32	25.12	***170.7***	$38.83
8	28.125	0.27	4	30	119.91	4.00	10.70	6	11	4.84	86.76	19.19	$19.58	$22.32	27.17	***184.7***	$41.90
8	28.125	0.27	4	30	119.91	4.00	10.70	6	13	5.72	101.56	22.20	$22.64	$22.32	29.01	***197.2***	$44.96
8	28.125	0.27	4	36	119.91	3.33	8.94	3	5	0.55	9.62	4.10	$4.19	$22.32	13.22	***75.1***	$26.51
8	28.125	0.27	4	36	119.91	3.33	8.94	3	7	0.77	14.35	4.86	$4.95	$22.32	14.91	***84.7***	$27.27
8	28.125	0.27	4	36	119.91	3.33	8.94	3	9	0.99	19.06	5.61	$5.72	$22.32	16.36	***93.0***	$28.04
8	28.125	0.27	4	36	119.91	3.33	8.94	3	11	1.21	23.71	6.36	$6.49	$22.32	17.65	***100.3***	$28.81
8	28.125	0.27	4	36	119.91	3.33	8.94	3	13	1.43	28.32	7.11	$7.26	$22.32	18.81	***106.9***	$29.58
8	28.125	0.27	4	36	119.91	3.33	8.94	4	5	1.00	17.35	5.56	$5.68	$22.32	15.86	***90.1***	$28.00
8	28.125	0.27	4	36	119.91	3.33	8.94	4	7	1.40	25.82	6.90	$7.04	$22.32	18.19	***103.4***	$29.36
8	28.125	0.27	4	36	119.91	3.33	8.94	4	9	1.80	34.12	8.24	$8.40	$22.32	20.15	***114.5***	$30.72
8	28.125	0.27	4	36	119.91	3.33	8.94	4	11	2.20	42.29	9.57	$9.76	$22.32	21.88	***124.3***	$32.08
8	28.125	0.27	4	36	119.91	3.33	8.94	4	13	2.60	50.29	10.91	$11.13	$22.32	23.42	***133.1***	$33.45
8	28.125	0.27	4	36	119.91	3.33	8.94	5	5	1.55	26.65	7.44	$7.59	$22.32	18.40	***104.5***	$29.91
8	28.125	0.27	4	36	119.91	3.33	8.94	5	7	2.17	39.44	9.53	$9.72	$22.32	21.30	***121.0***	$32.04
8	28.125	0.27	4	36	119.91	3.33	8.94	5	9	2.79	51.88	11.61	$11.84	$22.32	23.71	***134.7***	$34.16
8	28.125	0.27	4	36	119.91	3.33	8.94	5	11	3.41	63.94	13.70	$13.97	$22.32	25.80	***146.6***	$36.29
8	28.125	0.27	4	36	119.91	3.33	8.94	5	13	4.03	75.12	15.78	$16.10	$22.32	27.57	***156.6***	$38.42
8	28.125	0.27	4	36	119.91	3.33	8.94	6	5	2.20	37.41	9.73	$9.93	$22.32	20.87	***118.6***	$32.25
8	28.125	0.27	4	36	119.91	3.33	8.94	6	7	3.08	55.03	12.74	$12.99	$22.32	24.28	***137.9***	$35.31
8	28.125	0.27	4	36	119.91	3.33	8.94	6	9	3.96	71.62	15.74	$16.06	$22.32	27.03	***153.6***	$38.38
8	28.125	0.27	4	36	119.91	3.33	8.94	6	11	4.84	86.76	18.75	$19.12	$22.32	29.28	***166.4***	$41.44
8	28.125	0.27	4	36	119.91	3.33	8.94	6	13	5.72	101.56	21.75	$22.19	$22.32	31.30	***177.8***	$44.51

White Text - inadequate temperature and shrinkage steel
Italic Text - inadequate structural capacity
Highlighted Row - good design – valid for use

1 in. = 25.4 mm
1 ft = 0.3048 m
1 kip = 4.448 kN

Table A-1 (continued). Interior Section Strength and Cost Calculations for All Configurations

Top Width (in)	Base Width (in)	Concrete Volume (yd^3 / ft)	Stirrups					Longitudinal Steel				Weight of Steel (lb / ft)	Cost of Steel ($ / ft)	Cost of Concrete ($ / ft)	Yield Line Calculations		Total Cost ($ / ft)
			Bar #	Spacing (in)	Length (in)	Length / ft (ft / ft)	M_C (k-ft / ft)	Bar #	Quantity	A_s (in^2)	M_w (k-ft / ft)				L_{CR} (ft)	ΦR_w (kips)	
8	28.125	0.27	5	12	120.85	10.07	40.42	3	5	0.55	9.62	12.38	$12.63	$22.32	9.59	246.3	$34.95
8	28.125	0.27	5	12	120.85	10.07	40.42	3	7	0.77	14.35	13.14	$13.40	$22.32	10.23	262.7	$35.72
8	28.125	0.27	5	12	120.85	10.07	40.42	3	9	0.99	19.06	13.89	$14.17	$22.32	10.80	277.4	$36.49
8	28.125	0.27	5	12	120.85	10.07	40.42	3	11	1.21	23.71	14.64	$14.93	$22.32	11.33	290.8	$37.25
8	28.125	0.27	5	12	120.85	10.07	40.42	3	13	1.43	28.32	15.39	$15.70	$22.32	11.81	303.3	$38.02
8	28.125	0.27	5	12	120.85	10.07	40.42	4	5	1.00	17.35	13.84	$14.12	$22.32	10.60	272.2	$36.44
8	28.125	0.27	5	12	120.85	10.07	40.42	4	7	1.40	25.82	15.18	$15.48	$22.32	11.55	296.6	$37.80
8	28.125	0.27	5	12	120.85	10.07	40.42	4	9	1.80	34.12	16.52	$16.85	$22.32	12.38	317.9	$39.17
8	28.125	0.27	5	12	120.85	10.07	40.42	4	11	2.20	42.29	17.85	$18.21	$22.32	13.12	336.9	$40.53
8	28.125	0.27	5	12	120.85	10.07	40.42	4	13	2.60	50.29	19.19	$19.57	$22.32	13.79	354.2	$41.89
8	28.125	0.27	5	12	120.85	10.07	40.42	5	5	1.55	26.65	15.72	$16.03	$22.32	11.64	298.8	$38.35
8	28.125	0.27	5	12	120.85	10.07	40.42	5	7	2.17	39.44	17.80	$18.16	$22.32	12.87	330.4	$40.48
8	28.125	0.27	5	12	120.85	10.07	40.42	5	9	2.79	51.88	19.89	$20.29	$22.32	13.92	357.5	$42.61
8	28.125	0.27	5	12	120.85	10.07	40.42	5	11	3.41	63.94	21.98	$22.42	$22.32	14.84	381.2	$44.74
8	28.125	0.27	5	12	120.85	10.07	40.42	5	13	4.03	75.12	24.06	$24.54	$22.32	15.63	401.4	$46.86
8	28.125	0.27	5	12	120.85	10.07	40.42	6	5	2.20	37.41	18.01	$18.37	$22.32	12.69	325.7	$40.69
8	28.125	0.27	5	12	120.85	10.07	40.42	6	7	3.08	55.03	21.02	$21.44	$22.32	14.17	363.9	$43.76
8	28.125	0.27	5	12	120.85	10.07	40.42	6	9	3.96	71.62	24.02	$24.50	$22.32	15.39	395.2	$46.82
8	28.125	0.27	5	12	120.85	10.07	40.42	6	11	4.84	86.76	27.03	$27.57	$22.32	16.40	421.2	$49.89
8	28.125	0.27	5	12	120.85	10.07	40.42	6	13	5.72	101.56	30.03	$30.63	$22.32	17.32	444.7	$52.95
8	28.125	0.27	5	18	120.85	6.71	27.28	3	5	0.55	9.62	8.88	$9.06	$22.32	10.22	***177.0***	$31.38
8	28.125	0.27	5	18	120.85	6.71	27.28	3	7	0.77	14.35	9.63	$9.83	$22.32	11.06	***191.6***	$32.15
8	28.125	0.27	5	18	120.85	6.71	27.28	3	9	0.99	19.06	10.39	$10.59	$22.32	11.80	***204.5***	$32.91
8	28.125	0.27	5	18	120.85	6.71	27.28	3	11	1.21	23.71	11.14	$11.36	$22.32	12.47	216.2	$33.68
8	28.125	0.27	5	18	120.85	6.71	27.28	3	13	1.43	28.32	11.89	$12.13	$22.32	13.09	226.9	$34.45
8	28.125	0.27	5	18	120.85	6.71	27.28	4	5	1.00	17.35	10.34	$10.55	$22.32	11.54	***200.0***	$32.87
8	28.125	0.27	5	18	120.85	6.71	27.28	4	7	1.40	25.82	11.68	$11.91	$22.32	12.76	221.2	$34.23
8	28.125	0.27	5	18	120.85	6.71	27.28	4	9	1.80	34.12	13.01	$13.27	$22.32	13.81	239.4	$35.59
8	28.125	0.27	5	18	120.85	6.71	27.28	4	11	2.20	42.29	14.35	$14.64	$22.32	14.75	255.6	$36.96
8	28.125	0.27	5	18	120.85	6.71	27.28	4	13	2.60	50.29	15.69	$16.00	$22.32	15.59	270.2	$38.32
8	28.125	0.27	5	18	120.85	6.71	27.28	5	5	1.55	26.65	12.22	$12.46	$22.32	12.87	223.1	$34.78
8	28.125	0.27	5	18	120.85	6.71	27.28	5	7	2.17	39.44	14.30	$14.59	$22.32	14.43	250.1	$36.91
8	28.125	0.27	5	18	120.85	6.71	27.28	5	9	2.79	51.88	16.39	$16.72	$22.32	15.75	273.0	$39.04
8	28.125	0.27	5	18	120.85	6.71	27.28	5	11	3.41	63.94	18.48	$18.85	$22.32	16.91	293.0	$41.17
8	28.125	0.27	5	18	120.85	6.71	27.28	5	13	4.03	75.12	20.56	$20.97	$22.32	17.89	310.0	$43.29
8	28.125	0.27	5	18	120.85	6.71	27.28	6	5	2.20	37.41	14.51	$14.80	$22.32	14.20	246.1	$37.12
8	28.125	0.27	5	18	120.85	6.71	27.28	6	7	3.08	55.03	17.52	$17.87	$22.32	16.06	278.4	$40.19
8	28.125	0.27	5	18	120.85	6.71	27.28	6	9	3.96	71.62	20.52	$20.93	$22.32	17.59	304.8	$43.25
8	28.125	0.27	5	18	120.85	6.71	27.28	6	11	4.84	86.76	23.52	$24.00	$22.32	18.84	326.5	$46.31
8	28.125	0.27	5	18	120.85	6.71	27.28	6	13	5.72	101.56	26.53	$27.06	$22.32	19.97	346.1	$49.38

White Text - inadequate temperature and shrinkage steel
Italic Text - inadequate structural capacity
Highlighted Row - good design – valid for use

1 in. = 25.4 mm
1 ft = 0.3048 m
1 kip = 4.448 kN

Table A-1 (continued). Interior Section Strength and Cost Calculations for All Configurations

Top Width (in)	Base Width (in)	Concrete Volume (yd^3 / ft)	Stirrups					Longitudinal Steel				Weight of Steel (lb / ft)	Cost of Steel ($ / ft)	Cost of Concrete ($ / ft)	Yield Line Calculations		Total Cost ($ / ft)
			Bar #	Spacing (in)	Length (in)	Length / ft (ft / ft)	M_C (k-ft / ft)	Bar #	Quantity	A_s (in^2)	M_w (k-ft / ft)				L_{CR} (ft)	ΦR_w (kips)	
8	28.125	0.27	5	24	120.85	5.04	20.58	3	5	0.55	9.62	7.13	$7.27	$22.32	10.78	***141.0***	$29.59
8	28.125	0.27	5	24	120.85	5.04	20.58	3	7	0.77	14.35	7.88	$8.04	$22.32	11.80	***154.3***	$30.36
8	28.125	0.27	5	24	120.85	5.04	20.58	3	9	0.99	19.06	8.64	$8.81	$22.32	12.69	***165.9***	$31.13
8	28.125	0.27	5	24	120.85	5.04	20.58	3	11	1.21	23.71	9.39	$9.58	$22.32	13.48	***176.3***	$31.90
8	28.125	0.27	5	24	120.85	5.04	20.58	3	13	1.43	28.32	10.14	$10.34	$22.32	14.22	***185.9***	$32.66
8	28.125	0.27	5	24	120.85	5.04	20.58	4	5	1.00	17.35	8.59	$8.76	$22.32	12.38	***161.8***	$31.08
8	28.125	0.27	5	24	120.85	5.04	20.58	4	7	1.40	25.82	9.93	$10.13	$22.32	13.83	***180.8***	$32.45
8	28.125	0.27	5	24	120.85	5.04	20.58	4	9	1.80	34.12	11.26	$11.49	$22.32	15.07	***197.0***	$33.81
8	28.125	0.27	5	24	120.85	5.04	20.58	4	11	2.20	42.29	12.60	$12.85	$22.32	16.16	***211.4***	$35.17
8	28.125	0.27	5	24	120.85	5.04	20.58	4	13	2.60	50.29	13.94	$14.21	$22.32	17.15	224.3	$36.53
8	28.125	0.27	5	24	120.85	5.04	20.58	5	5	1.55	26.65	10.47	$10.68	$22.32	13.96	***182.5***	$33.00
8	28.125	0.27	5	24	120.85	5.04	20.58	5	7	2.17	39.44	12.55	$12.80	$22.32	15.79	***206.5***	$35.12
8	28.125	0.27	5	24	120.85	5.04	20.58	5	9	2.79	51.88	14.64	$14.93	$22.32	17.34	226.7	$37.25
8	28.125	0.27	5	24	120.85	5.04	20.58	5	11	3.41	63.94	16.72	$17.06	$22.32	18.68	244.3	$39.38
8	28.125	0.27	5	24	120.85	5.04	20.58	5	13	4.03	75.12	18.81	$19.19	$22.32	19.82	259.2	$41.51
8	28.125	0.27	5	24	120.85	5.04	20.58	6	5	2.20	37.41	12.76	$13.02	$22.32	15.52	***203.0***	$35.34
8	28.125	0.27	5	24	120.85	5.04	20.58	6	7	3.08	55.03	15.77	$16.08	$22.32	17.70	231.5	$38.40
8	28.125	0.27	5	24	120.85	5.04	20.58	6	9	3.96	71.62	18.77	$19.15	$22.32	19.47	254.7	$41.47
8	28.125	0.27	5	24	120.85	5.04	20.58	6	11	4.84	86.76	21.77	$22.21	$22.32	20.93	273.7	$44.53
8	28.125	0.27	5	24	120.85	5.04	20.58	6	13	5.72	101.56	24.78	$25.27	$22.32	22.24	290.9	$47.59
8	28.125	0.27	5	30	120.85	4.03	16.50	3	5	0.55	9.62	6.08	$6.20	$22.32	11.31	***118.6***	$28.52
8	28.125	0.27	5	30	120.85	4.03	16.50	3	7	0.77	14.35	6.83	$6.97	$22.32	12.48	***130.8***	$29.29
8	28.125	0.27	5	30	120.85	4.03	16.50	3	9	0.99	19.06	7.59	$7.74	$22.32	13.50	***141.5***	$30.06
8	28.125	0.27	5	30	120.85	4.03	16.50	3	11	1.21	23.71	8.34	$8.50	$22.32	14.41	***151.0***	$30.82
8	28.125	0.27	5	30	120.85	4.03	16.50	3	13	1.43	28.32	9.09	$9.27	$22.32	15.24	***159.7***	$31.59
8	28.125	0.27	5	30	120.85	4.03	16.50	4	5	1.00	17.35	7.54	$7.69	$22.32	13.14	***137.7***	$30.01
8	28.125	0.27	5	30	120.85	4.03	16.50	4	7	1.40	25.82	8.88	$9.06	$22.32	14.79	***155.1***	$31.37
8	28.125	0.27	5	30	120.85	4.03	16.50	4	9	1.80	34.12	10.21	$10.42	$22.32	16.20	***169.8***	$32.74
8	28.125	0.27	5	30	120.85	4.03	16.50	4	11	2.20	42.29	11.55	$11.78	$22.32	17.44	***182.8***	$34.10
8	28.125	0.27	5	30	120.85	4.03	16.50	4	13	2.60	50.29	12.89	$13.14	$22.32	18.55	***194.5***	$35.46
8	28.125	0.27	5	30	120.85	4.03	16.50	5	5	1.55	26.65	9.42	$9.60	$22.32	14.94	***156.6***	$31.92
8	28.125	0.27	5	30	120.85	4.03	16.50	5	7	2.17	39.44	11.50	$11.73	$22.32	17.02	***178.4***	$34.05
8	28.125	0.27	5	30	120.85	4.03	16.50	5	9	2.79	51.88	13.59	$13.86	$22.32	18.76	***196.7***	$36.18
8	28.125	0.27	5	30	120.85	4.03	16.50	5	11	3.41	63.94	15.67	$15.99	$22.32	20.27	***212.5***	$38.31
8	28.125	0.27	5	30	120.85	4.03	16.50	5	13	4.03	75.12	17.76	$18.12	$22.32	21.56	226.0	$40.44
8	28.125	0.27	5	30	120.85	4.03	16.50	6	5	2.20	37.41	11.71	$11.95	$22.32	16.71	***175.2***	$34.27
8	28.125	0.27	5	30	120.85	4.03	16.50	6	7	3.08	55.03	14.72	$15.01	$22.32	19.17	***201.0***	$37.33
8	28.125	0.27	5	30	120.85	4.03	16.50	6	9	3.96	71.62	17.72	$18.07	$22.32	21.17	221.9	$40.39
8	28.125	0.27	5	30	120.85	4.03	16.50	6	11	4.84	86.76	20.72	$21.14	$22.32	22.81	239.1	$43.46
8	28.125	0.27	5	30	120.85	4.03	16.50	6	13	5.72	101.56	23.73	$24.20	$22.32	24.28	254.5	$46.52

White Text - inadequate temperature and shrinkage steel
Italic Text - inadequate structural capacity
Highlighted Row - good design – valid for use

1 in. = 25.4 mm
1 ft = 0.3048 m
1 kip = 4.448 kN

Table A-1 (continued). Interior Section Strength and Cost Calculations for All Configurations

Top Width (in)	Base Width (in)	Concrete Volume (yd^3 / ft)	Stirrups					Longitudinal Steel				Weight of Steel (lb / ft)	Cost of Steel ($ / ft)	Cost of Concrete ($ / ft)	Yield Line Calculations		Total Cost ($ / ft)
			Bar #	Spacing (in)	Length (in)	Length / ft (ft / ft)	M_C (k-ft / ft)	Bar #	Quantity	A_s (in^2)	M_w (k-ft / ft)				L_{CR} (ft)	ΦR_w (kips)	
8	28.125	0.27	5	36	120.85	3.36	13.81	3	5	0.55	9.62	5.38	$5.49	$22.32	11.79	***103.4***	$27.81
8	28.125	0.27	5	36	120.85	3.36	13.81	3	7	0.77	14.35	6.13	$6.26	$22.32	13.10	***114.9***	$28.58
8	28.125	0.27	5	36	120.85	3.36	13.81	3	9	0.99	19.06	6.89	$7.02	$22.32	14.23	***124.8***	$29.34
8	28.125	0.27	5	36	120.85	3.36	13.81	3	11	1.21	23.71	7.64	$7.79	$22.32	15.24	***133.6***	$30.11
8	28.125	0.27	5	36	120.85	3.36	13.81	3	13	1.43	28.32	8.39	$8.56	$22.32	16.16	***141.7***	$30.88
8	28.125	0.27	5	36	120.85	3.36	13.81	4	5	1.00	17.35	6.84	$6.98	$22.32	13.83	***121.3***	$29.30
8	28.125	0.27	5	36	120.85	3.36	13.81	4	7	1.40	25.82	8.18	$8.34	$22.32	15.67	***137.4***	$30.66
8	28.125	0.27	5	36	120.85	3.36	13.81	4	9	1.80	34.12	9.51	$9.70	$22.32	17.22	***151.0***	$32.02
8	28.125	0.27	5	36	120.85	3.36	13.81	4	11	2.20	42.29	10.85	$11.07	$22.32	18.59	***163.0***	$33.39
8	28.125	0.27	5	36	120.85	3.36	13.81	4	13	2.60	50.29	12.19	$12.43	$22.32	19.81	***173.7***	$34.75
8	28.125	0.27	5	36	120.85	3.36	13.81	5	5	1.55	26.65	8.72	$8.89	$22.32	15.83	***138.8***	$31.21
8	28.125	0.27	5	36	120.85	3.36	13.81	5	7	2.17	39.44	10.80	$11.02	$22.32	18.12	***159.0***	$33.34
8	28.125	0.27	5	36	120.85	3.36	13.81	5	9	2.79	51.88	12.89	$13.15	$22.32	20.04	***175.8***	$35.47
8	28.125	0.27	5	36	120.85	3.36	13.81	5	11	3.41	63.94	14.97	$15.27	$22.32	21.70	***190.4***	$37.59
8	28.125	0.27	5	36	120.85	3.36	13.81	5	13	4.03	75.12	17.06	$17.40	$22.32	23.12	***202.7***	$39.72
8	28.125	0.27	5	36	120.85	3.36	13.81	6	5	2.20	37.41	11.01	$11.23	$22.32	17.79	***156.0***	$33.55
8	28.125	0.27	5	36	120.85	3.36	13.81	6	7	3.08	55.03	14.02	$14.30	$22.32	20.49	***179.7***	$36.62
8	28.125	0.27	5	36	120.85	3.36	13.81	6	9	3.96	71.62	17.02	$17.36	$22.32	22.69	***199.0***	$39.68
8	28.125	0.27	5	36	120.85	3.36	13.81	6	11	4.84	86.76	20.02	$20.42	$22.32	24.48	214.7	$42.74
8	28.125	0.27	5	36	120.85	3.36	13.81	6	13	5.72	101.56	23.03	$23.49	$22.32	26.10	228.9	$45.81
8	28.125	0.27	6	12	136.74	11.40	56.50	3	5	0.55	9.62	19.00	$19.38	$22.32	9.19	329.9	$41.70
8	28.125	0.27	6	12	136.74	11.40	56.50	3	7	0.77	14.35	19.75	$20.14	$22.32	9.68	347.6	$42.46
8	28.125	0.27	6	12	136.74	11.40	56.50	3	9	0.99	19.06	20.50	$20.91	$22.32	10.14	363.9	$43.23
8	28.125	0.27	6	12	136.74	11.40	56.50	3	11	1.21	23.71	21.25	$21.68	$22.32	10.55	378.8	$44.00
8	28.125	0.27	6	12	136.74	11.40	56.50	3	13	1.43	28.32	22.00	$22.44	$22.32	10.94	392.8	$44.76
8	28.125	0.27	6	12	136.74	11.40	56.50	4	5	1.00	17.35	20.46	$20.86	$22.32	9.98	358.1	$43.18
8	28.125	0.27	6	12	136.74	11.40	56.50	4	7	1.40	25.82	21.79	$22.23	$22.32	10.73	385.3	$44.55
8	28.125	0.27	6	12	136.74	11.40	56.50	4	9	1.80	34.12	23.13	$23.59	$22.32	11.40	409.2	$45.91
8	28.125	0.27	6	12	136.74	11.40	56.50	4	11	2.20	42.29	24.46	$24.95	$22.32	12.00	430.9	$47.27
8	28.125	0.27	6	12	136.74	11.40	56.50	4	13	2.60	50.29	25.80	$26.32	$22.32	12.55	450.6	$48.64
8	28.125	0.27	6	12	136.74	11.40	56.50	5	5	1.55	26.65	22.33	$22.78	$22.32	10.80	387.8	$45.10
8	28.125	0.27	6	12	136.74	11.40	56.50	5	7	2.17	39.44	24.42	$24.90	$22.32	11.80	423.5	$47.22
8	28.125	0.27	6	12	136.74	11.40	56.50	5	9	2.79	51.88	26.50	$27.03	$22.32	12.66	454.4	$49.35
8	28.125	0.27	6	12	136.74	11.40	56.50	5	11	3.41	63.94	28.59	$29.16	$22.32	13.42	481.6	$51.48
8	28.125	0.27	6	12	136.74	11.40	56.50	5	13	4.03	75.12	30.67	$31.29	$22.32	14.07	505.0	$53.61
8	28.125	0.27	6	12	136.74	11.40	56.50	6	5	2.20	37.41	24.63	$25.12	$22.32	11.65	418.2	$47.44
8	28.125	0.27	6	12	136.74	11.40	56.50	6	7	3.08	55.03	27.63	$28.18	$22.32	12.86	461.7	$50.50
8	28.125	0.27	6	12	136.74	11.40	56.50	6	9	3.96	71.62	30.63	$31.25	$22.32	13.87	497.8	$53.57
8	28.125	0.27	6	12	136.74	11.40	56.50	6	11	4.84	86.76	33.64	$34.31	$22.32	14.71	527.9	$56.63
8	28.125	0.27	6	12	136.74	11.40	56.50	6	13	5.72	101.56	36.64	$37.37	$22.32	15.46	555.1	$59.69

White Text - inadequate temperature and shrinkage steel
Italic Text - inadequate structural capacity
Highlighted Row - good design – valid for use

1 in. = 25.4 mm
1 ft = 0.3048 m
1 kip = 4.448 kN

Table A-1 (continued). Interior Section Strength and Cost Calculations for All Configurations

Top Width (in)	Base Width (in)	Concrete Volume (yd^3 / ft)	Stirrups					Longitudinal Steel				Weight of Steel (lb / ft)	Cost of Steel ($ / ft)	Cost of Concrete ($ / ft)	Yield Line Calculations		Total Cost ($ / ft)
			Bar #	Spacing (in)	Length (in)	Length / ft (ft / ft)	M_C (k-ft / ft)	Bar #	Quantity	A_s (in^2)	M_w (k-ft / ft)				L_{CR} (ft)	ΦR_w (kips)	
8	28.125	0.27	6	18	136.74	7.60	38.33	3	5	0.55	9.62	13.29	$13.56	$22.32	9.67	235.4	$35.88
8	28.125	0.27	6	18	136.74	7.60	38.33	3	7	0.77	14.35	14.04	$14.32	$22.32	10.33	251.5	$36.64
8	28.125	0.27	6	18	136.74	7.60	38.33	3	9	0.99	19.06	14.79	$15.09	$22.32	10.92	266.0	$37.41
8	28.125	0.27	6	18	136.74	7.60	38.33	3	11	1.21	23.71	15.55	$15.86	$22.32	11.46	279.2	$38.18
8	28.125	0.27	6	18	136.74	7.60	38.33	3	13	1.43	28.32	16.30	$16.62	$22.32	11.97	291.4	$38.94
8	28.125	0.27	6	18	136.74	7.60	38.33	4	5	1.00	17.35	14.75	$15.05	$22.32	10.71	260.9	$37.37
8	28.125	0.27	6	18	136.74	7.60	38.33	4	7	1.40	25.82	16.09	$16.41	$22.32	11.70	284.9	$38.73
8	28.125	0.27	6	18	136.74	7.60	38.33	4	9	1.80	34.12	17.42	$17.77	$22.32	12.55	305.7	$40.09
8	28.125	0.27	6	18	136.74	7.60	38.33	4	11	2.20	42.29	18.76	$19.13	$22.32	13.32	324.4	$41.45
8	28.125	0.27	6	18	136.74	7.60	38.33	4	13	2.60	50.29	20.09	$20.50	$22.32	14.01	341.3	$42.82
8	28.125	0.27	6	18	136.74	7.60	38.33	5	5	1.55	26.65	16.63	$16.96	$22.32	11.79	287.1	$39.28
8	28.125	0.27	6	18	136.74	7.60	38.33	5	7	2.17	39.44	18.71	$19.09	$22.32	13.06	318.0	$41.41
8	28.125	0.27	6	18	136.74	7.60	38.33	5	9	2.79	51.88	20.80	$21.21	$22.32	14.15	344.5	$43.53
8	28.125	0.27	6	18	136.74	7.60	38.33	5	11	3.41	63.94	22.88	$23.34	$22.32	15.10	367.6	$45.66
8	28.125	0.27	6	18	136.74	7.60	38.33	5	13	4.03	75.12	24.97	$25.47	$22.32	15.91	387.5	$47.79
8	28.125	0.27	6	18	136.74	7.60	38.33	6	5	2.20	37.41	18.92	$19.30	$22.32	12.87	313.4	$41.62
8	28.125	0.27	6	18	136.74	7.60	38.33	6	7	3.08	55.03	21.92	$22.36	$22.32	14.40	350.7	$44.68
8	28.125	0.27	6	18	136.74	7.60	38.33	6	9	3.96	71.62	24.93	$25.43	$22.32	15.66	381.4	$47.75
8	28.125	0.27	6	18	136.74	7.60	38.33	6	11	4.84	86.76	27.93	$28.49	$22.32	16.70	406.8	$50.81
8	28.125	0.27	6	18	136.74	7.60	38.33	6	13	5.72	101.56	30.94	$31.55	$22.32	17.64	429.7	$53.87
8	28.125	0.27	6	24	136.74	5.70	29.00	3	5	0.55	9.62	10.44	$10.65	$22.32	10.11	***186.2***	$32.97
8	28.125	0.27	6	24	136.74	5.70	29.00	3	7	0.77	14.35	11.19	$11.41	$22.32	10.91	***201.1***	$33.73
8	28.125	0.27	6	24	136.74	5.70	29.00	3	9	0.99	19.06	11.94	$12.18	$22.32	11.63	***214.3***	$34.50
8	28.125	0.27	6	24	136.74	5.70	29.00	3	11	1.21	23.71	12.69	$12.95	$22.32	12.28	226.2	$35.27
8	28.125	0.27	6	24	136.74	5.70	29.00	3	13	1.43	28.32	13.45	$13.71	$22.32	12.87	237.2	$36.03
8	28.125	0.27	6	24	136.74	5.70	29.00	4	5	1.00	17.35	11.90	$12.14	$22.32	11.38	***209.6***	$34.46
8	28.125	0.27	6	24	136.74	5.70	29.00	4	7	1.40	25.82	13.23	$13.50	$22.32	12.55	231.3	$35.82
8	28.125	0.27	6	24	136.74	5.70	29.00	4	9	1.80	34.12	14.57	$14.86	$22.32	13.57	250.0	$37.18
8	28.125	0.27	6	24	136.74	5.70	29.00	4	11	2.20	42.29	15.91	$16.22	$22.32	14.47	266.6	$38.54
8	28.125	0.27	6	24	136.74	5.70	29.00	4	13	2.60	50.29	17.24	$17.59	$22.32	15.29	281.6	$39.91
8	28.125	0.27	6	24	136.74	5.70	29.00	5	5	1.55	26.65	13.77	$14.05	$22.32	12.66	233.3	$36.37
8	28.125	0.27	6	24	136.74	5.70	29.00	5	7	2.17	39.44	15.86	$16.18	$22.32	14.17	261.0	$38.50
8	28.125	0.27	6	24	136.74	5.70	29.00	5	9	2.79	51.88	17.94	$18.30	$22.32	15.44	284.5	$40.62
8	28.125	0.27	6	24	136.74	5.70	29.00	5	11	3.41	63.94	20.03	$20.43	$22.32	16.55	305.0	$42.75
8	28.125	0.27	6	24	136.74	5.70	29.00	5	13	4.03	75.12	22.12	$22.56	$22.32	17.50	322.5	$44.88
8	28.125	0.27	6	24	136.74	5.70	29.00	6	5	2.20	37.41	16.07	$16.39	$22.32	13.94	256.9	$38.71
8	28.125	0.27	6	24	136.74	5.70	29.00	6	7	3.08	55.03	19.07	$19.45	$22.32	15.74	290.0	$41.77
8	28.125	0.27	6	24	136.74	5.70	29.00	6	9	3.96	71.62	22.08	$22.52	$22.32	17.21	317.1	$44.84
8	28.125	0.27	6	24	136.74	5.70	29.00	6	11	4.84	86.76	25.08	$25.58	$22.32	18.43	339.5	$47.90
8	28.125	0.27	6	24	136.74	5.70	29.00	6	13	5.72	101.56	28.08	$28.65	$22.32	19.52	359.6	$50.97

White Text - inadequate temperature and shrinkage steel
Italic Text - inadequate structural capacity
Highlighted Row - good design – valid for use

1 in. = 25.4 mm
1 ft = 0.3048 m
1 kip = 4.448 kN

Table A-1 (continued). Interior Section Strength and Cost Calculations for All Configurations

Top Width (in)	Base Width (in)	Concrete Volume (yd^3 / ft)	Stirrups					Longitudinal Steel				Weight of Steel (lb / ft)	Cost of Steel ($ / ft)	Cost of Concrete ($ / ft)	Yield Line Calculations		Total Cost ($ / ft)
			Bar #	Spacing (in)	Length (in)	Length / ft (ft / ft)	M_C (k-ft / ft)	Bar #	Quantity	A_s (in^2)	M_w (k-ft / ft)				L_{CR} (ft)	ΦR_w (kips)	
8	28.125	0.27	6	30	136.74	4.56	23.30	3	5	0.55	9.62	8.73	$8.90	$22.32	10.52	***155.7***	$31.22
8	28.125	0.27	6	30	136.74	4.56	23.30	3	7	0.77	14.35	9.48	$9.67	$22.32	11.45	***169.5***	$31.99
8	28.125	0.27	6	30	136.74	4.56	23.30	3	9	0.99	19.06	10.23	$10.43	$22.32	12.28	***181.7***	$32.75
8	28.125	0.27	6	30	136.74	4.56	23.30	3	11	1.21	23.71	10.98	$11.20	$22.32	13.02	***192.7***	$33.52
8	28.125	0.27	6	30	136.74	4.56	23.30	3	13	1.43	28.32	11.73	$11.97	$22.32	13.70	***202.8***	$34.29
8	28.125	0.27	6	30	136.74	4.56	23.30	4	5	1.00	17.35	10.19	$10.39	$22.32	11.99	***177.5***	$32.71
8	28.125	0.27	6	30	136.74	4.56	23.30	4	7	1.40	25.82	11.52	$11.75	$22.32	13.34	***197.4***	$34.07
8	28.125	0.27	6	30	136.74	4.56	23.30	4	9	1.80	34.12	12.86	$13.12	$22.32	14.49	***214.5***	$35.44
8	28.125	0.27	6	30	136.74	4.56	23.30	4	11	2.20	42.29	14.19	$14.48	$22.32	15.51	229.6	$36.80
8	28.125	0.27	6	30	136.74	4.56	23.30	4	13	2.60	50.29	15.53	$15.84	$22.32	16.43	243.3	$38.16
8	28.125	0.27	6	30	136.74	4.56	23.30	5	5	1.55	26.65	12.06	$12.30	$22.32	13.46	***199.2***	$34.62
8	28.125	0.27	6	30	136.74	4.56	23.30	5	7	2.17	39.44	14.15	$14.43	$22.32	15.17	224.5	$36.75
8	28.125	0.27	6	30	136.74	4.56	23.30	5	9	2.79	51.88	16.23	$16.56	$22.32	16.61	245.9	$38.88
8	28.125	0.27	6	30	136.74	4.56	23.30	5	11	3.41	63.94	18.32	$18.69	$22.32	17.87	264.4	$41.01
8	28.125	0.27	6	30	136.74	4.56	23.30	5	13	4.03	75.12	20.41	$20.81	$22.32	18.93	280.3	$43.13
8	28.125	0.27	6	30	136.74	4.56	23.30	6	5	2.20	37.41	14.36	$14.64	$22.32	14.91	220.8	$36.96
8	28.125	0.27	6	30	136.74	4.56	23.30	6	7	3.08	55.03	17.36	$17.71	$22.32	16.95	250.9	$40.03
8	28.125	0.27	6	30	136.74	4.56	23.30	6	9	3.96	71.62	20.36	$20.77	$22.32	18.61	275.4	$43.09
8	28.125	0.27	6	30	136.74	4.56	23.30	6	11	4.84	86.76	23.37	$23.84	$22.32	19.97	295.7	$46.16
8	28.125	0.27	6	30	136.74	4.56	23.30	6	13	5.72	101.56	26.37	$26.90	$22.32	21.20	313.8	$49.22
8	28.125	0.27	6	36	136.74	3.80	19.47	3	5	0.55	9.62	7.59	$7.74	$22.32	10.91	***134.9***	$30.06
8	28.125	0.27	6	36	136.74	3.80	19.47	3	7	0.77	14.35	8.34	$8.50	$22.32	11.96	***147.9***	$30.82
8	28.125	0.27	6	36	136.74	3.80	19.47	3	9	0.99	19.06	9.09	$9.27	$22.32	12.88	***159.3***	$31.59
8	28.125	0.27	6	36	136.74	3.80	19.47	3	11	1.21	23.71	9.84	$10.04	$22.32	13.70	***169.5***	$32.36
8	28.125	0.27	6	36	136.74	3.80	19.47	3	13	1.43	28.32	10.59	$10.80	$22.32	14.46	***178.9***	$33.12
8	28.125	0.27	6	36	136.74	3.80	19.47	4	5	1.00	17.35	9.05	$9.23	$22.32	12.56	***155.3***	$31.55
8	28.125	0.27	6	36	136.74	3.80	19.47	4	7	1.40	25.82	10.38	$10.59	$22.32	14.06	***173.9***	$32.91
8	28.125	0.27	6	36	136.74	3.80	19.47	4	9	1.80	34.12	11.72	$11.95	$22.32	15.34	***189.7***	$34.27
8	28.125	0.27	6	36	136.74	3.80	19.47	4	11	2.20	42.29	13.05	$13.31	$22.32	16.47	***203.7***	$35.63
8	28.125	0.27	6	36	136.74	3.80	19.47	4	13	2.60	50.29	14.39	$14.68	$22.32	17.49	216.3	$37.00
8	28.125	0.27	6	36	136.74	3.80	19.47	5	5	1.55	26.65	10.92	$11.14	$22.32	14.19	***175.6***	$33.46
8	28.125	0.27	6	36	136.74	3.80	19.47	5	7	2.17	39.44	13.01	$13.27	$22.32	16.09	***199.0***	$35.59
8	28.125	0.27	6	36	136.74	3.80	19.47	5	9	2.79	51.88	15.09	$15.39	$22.32	17.68	218.7	$37.71
8	28.125	0.27	6	36	136.74	3.80	19.47	5	11	3.41	63.94	17.18	$17.52	$22.32	19.06	235.8	$39.84
8	28.125	0.27	6	36	136.74	3.80	19.47	5	13	4.03	75.12	19.26	$19.65	$22.32	20.24	250.4	$41.97
8	28.125	0.27	6	36	136.74	3.80	19.47	6	5	2.20	37.41	13.22	$13.48	$22.32	15.81	***195.5***	$35.80
8	28.125	0.27	6	36	136.74	3.80	19.47	6	7	3.08	55.03	16.22	$16.54	$22.32	18.05	223.3	$38.86
8	28.125	0.27	6	36	136.74	3.80	19.47	6	9	3.96	71.62	19.22	$19.61	$22.32	19.88	245.9	$41.93
8	28.125	0.27	6	36	136.74	3.80	19.47	6	11	4.84	86.76	22.23	$22.67	$22.32	21.38	264.5	$44.99
8	28.125	0.27	6	36	136.74	3.80	19.47	6	13	5.72	101.56	25.23	$25.74	$22.32	22.73	281.2	$48.06

White Text - inadequate temperature and shrinkage steel
Italic Text - inadequate structural capacity
Highlighted Row - good design – valid for use

1 in. = 25.4 mm
1 ft = 0.3048 m
1 kip = 4.448 kN

Appendix B. Barrier End Section Configurations and Calculations

Table B-1. Barrier End Section Strength and Cost Calculations for All Configurations

Table B-1. Barrier End Section Strength and Cost Calculations - All Configurations

Top Width (in)	Base Width (in)	Concrete Volume (yd^3 / ft)	Stirrups					Longitudinal Steel				Weight of Steel (lb / ft)	Cost of Steel ($ / ft)	Cost of Concrete ($ / ft)	Yield Line Calculations		
			Bar #	Spacing (in)	Length (in)	Length / ft (ft / ft)	M_C (k-ft / ft)	Bar #	Quantity	A_s (in^2)	M_w (k-ft / ft)				L_{CR} (ft)	ΦR_w (kips)	ΦR_w (kips)
4	24.125	0.23	3	12	109.34	9.11	12.50	3	5	0.55	8.06	5.31	$5.41	$18.56	8.60	75.9	***68.3***
4	24.125	0.23	3	12	109.34	9.11	12.50	3	7	0.77	12.03	6.06	$6.18	$18.56	8.87	78.3	***70.4***
4	24.125	0.23	3	12	109.34	9.11	12.50	3	9	0.99	15.94	6.81	$6.95	$18.56	9.12	80.5	***72.4***
4	24.125	0.23	3	12	109.34	9.11	12.50	3	11	1.21	19.82	7.56	$7.71	$18.56	9.36	82.6	***74.3***
4	24.125	0.23	3	12	109.34	9.11	12.50	3	13	1.43	23.65	8.31	$8.48	$18.56	9.58	84.6	***76.1***
4	24.125	0.23	3	12	109.34	9.11	12.50	4	5	1.00	14.53	6.77	$6.90	$18.56	9.03	79.7	***71.7***
4	24.125	0.23	3	12	109.34	9.11	12.50	4	7	1.40	21.59	8.10	$8.26	$18.56	9.46	83.5	***75.2***
4	24.125	0.23	3	12	109.34	9.11	12.50	4	9	1.80	28.47	9.44	$9.63	$18.56	9.86	87.0	***78.3***
4	24.125	0.23	3	12	109.34	9.11	12.50	4	11	2.20	35.24	10.77	$10.99	$18.56	10.22	90.1	***81.1***
4	24.125	0.23	3	12	109.34	9.11	12.50	4	13	2.60	41.82	12.11	$12.35	$18.56	10.55	93.1	***83.8***
4	24.125	0.23	3	12	109.34	9.11	12.50	5	5	1.55	22.26	8.64	$8.81	$18.56	9.50	83.9	***75.5***
4	24.125	0.23	3	12	109.34	9.11	12.50	5	7	2.17	32.88	10.73	$10.94	$18.56	10.09	89.1	***80.1***
4	24.125	0.23	3	12	109.34	9.11	12.50	5	9	2.79	43.15	12.81	$13.07	$18.56	10.61	93.6	***84.3***
4	24.125	0.23	3	12	109.34	9.11	12.50	5	11	3.41	53.00	14.90	$15.20	$18.56	11.07	97.7	***87.9***
4	24.125	0.23	3	12	109.34	9.11	12.50	5	13	4.03	62.00	16.98	$17.32	$18.56	11.47	101.2	***91.1***
4	24.125	0.23	3	12	109.34	9.11	12.50	6	5	2.20	31.21	10.94	$11.15	$18.56	10.00	88.3	***79.4***
4	24.125	0.23	3	12	109.34	9.11	12.50	6	7	3.08	45.74	13.94	$14.22	$18.56	10.74	94.7	***85.3***
4	24.125	0.23	3	12	109.34	9.11	12.50	6	9	3.96	59.18	16.94	$17.28	$18.56	11.35	100.1	***90.1***
4	24.125	0.23	3	12	109.34	9.11	12.50	6	11	4.84	71.24	19.95	$20.35	$18.56	11.86	104.6	***94.2***
4	24.125	0.23	3	12	109.34	9.11	12.50	6	13	5.72	82.91	22.95	$23.41	$18.56	12.32	108.7	***97.8***
4	24.125	0.23	3	18	109.34	6.07	8.33	3	5	0.55	8.06	4.16	$4.25	$18.56	8.87	52.2	***47.0***
4	24.125	0.23	3	18	109.34	6.07	8.33	3	7	0.77	12.03	4.92	$5.01	$18.56	9.25	54.4	***49.0***
4	24.125	0.23	3	18	109.34	6.07	8.33	3	9	0.99	15.94	5.67	$5.78	$18.56	9.60	56.5	***50.8***
4	24.125	0.23	3	18	109.34	6.07	8.33	3	11	1.21	19.82	6.42	$6.55	$18.56	9.92	58.4	***52.5***
4	24.125	0.23	3	18	109.34	6.07	8.33	3	13	1.43	23.65	7.17	$7.32	$18.56	10.23	60.2	***54.1***
4	24.125	0.23	3	18	109.34	6.07	8.33	4	5	1.00	14.53	5.62	$5.74	$18.56	9.48	55.7	***50.2***
4	24.125	0.23	3	18	109.34	6.07	8.33	4	7	1.40	21.59	6.96	$7.10	$18.56	10.07	59.2	***53.3***
4	24.125	0.23	3	18	109.34	6.07	8.33	4	9	1.80	28.47	8.30	$8.46	$18.56	10.59	62.3	***56.1***
4	24.125	0.23	3	18	109.34	6.07	8.33	4	11	2.20	35.24	9.63	$9.82	$18.56	11.07	65.1	***58.6***
4	24.125	0.23	3	18	109.34	6.07	8.33	4	13	2.60	41.82	10.97	$11.19	$18.56	11.50	67.7	***60.9***
4	24.125	0.23	3	18	109.34	6.07	8.33	5	5	1.55	22.26	7.50	$7.65	$18.56	10.12	59.5	***53.6***
4	24.125	0.23	3	18	109.34	6.07	8.33	5	7	2.17	32.88	9.58	$9.78	$18.56	10.90	64.1	***57.7***
4	24.125	0.23	3	18	109.34	6.07	8.33	5	9	2.79	43.15	11.67	$11.90	$18.56	11.59	68.2	***61.3***
4	24.125	0.23	3	18	109.34	6.07	8.33	5	11	3.41	53.00	13.76	$14.03	$18.56	12.19	71.7	***64.5***
4	24.125	0.23	3	18	109.34	6.07	8.33	5	13	4.03	62.00	15.84	$16.16	$18.56	12.70	74.7	***67.2***
4	24.125	0.23	3	18	109.34	6.07	8.33	6	5	2.20	31.21	9.79	$9.99	$18.56	10.79	63.5	***57.1***
4	24.125	0.23	3	18	109.34	6.07	8.33	6	7	3.08	45.74	12.80	$13.05	$18.56	11.75	69.1	***62.2***
4	24.125	0.23	3	18	109.34	6.07	8.33	6	9	3.96	59.18	15.80	$16.12	$18.56	12.54	73.8	***66.4***
4	24.125	0.23	3	18	109.34	6.07	8.33	6	11	4.84	71.24	18.81	$19.18	$18.56	13.20	77.6	***69.9***
4	24.125	0.23	3	18	109.34	6.07	8.33	6	13	5.72	82.91	21.81	$22.25	$18.56	13.79	81.1	***73.0***

White Text - inadequate temperature and shrinkage steel
Italic Text - inadequate structural capacity
Highlighted Row - good design – valid for use

1 in. = 25.4 mm
1 ft = 0.3048 m
1 kip = 4.448 kN

Table B-1 (continued). Barrier End Section Strength and Cost Calculations for All Configurations

Top Width (in)	Base Width (in)	Concrete Volume (yd^3 / ft)	Stirrups					Longitudinal Steel				Weight of Steel (lb / ft)	Cost of Steel ($ / ft)	Cost of Concrete ($ / ft)	Yield Line Calculations		
			Bar #	Spacing (in)	Length (in)	Length / ft (ft / ft)	M_C (k-ft / ft)	Bar #	Quantity	A_s (in^2)	M_w (k-ft / ft)				L_{CR} (ft)	ΦR_w (kips)	ΦR_w (kips)
4	24.125	0.23	3	24	109.34	4.56	6.29	3	5	0.55	8.06	3.59	$3.66	$18.56	9.13	40.5	***36.5***
4	24.125	0.23	3	24	109.34	4.56	6.29	3	7	0.77	12.03	4.34	$4.43	$18.56	9.60	42.6	***38.4***
4	24.125	0.23	3	24	109.34	4.56	6.29	3	9	0.99	15.94	5.10	$5.20	$18.56	10.03	44.5	***40.1***
4	24.125	0.23	3	24	109.34	4.56	6.29	3	11	1.21	19.82	5.85	$5.97	$18.56	10.43	46.3	***41.7***
4	24.125	0.23	3	24	109.34	4.56	6.29	3	13	1.43	23.65	6.60	$6.73	$18.56	10.80	47.9	***43.1***
4	24.125	0.23	3	24	109.34	4.56	6.29	4	5	1.00	14.53	5.05	$5.15	$18.56	9.88	43.9	***39.5***
4	24.125	0.23	3	24	109.34	4.56	6.29	4	7	1.40	21.59	6.39	$6.52	$18.56	10.60	47.1	***42.4***
4	24.125	0.23	3	24	109.34	4.56	6.29	4	9	1.80	28.47	7.72	$7.88	$18.56	11.23	49.9	***44.9***
4	24.125	0.23	3	24	109.34	4.56	6.29	4	11	2.20	35.24	9.06	$9.24	$18.56	11.81	52.4	***47.2***
4	24.125	0.23	3	24	109.34	4.56	6.29	4	13	2.60	41.82	10.40	$10.60	$18.56	12.33	54.8	***49.3***
4	24.125	0.23	3	24	109.34	4.56	6.29	5	5	1.55	22.26	6.93	$7.07	$18.56	10.66	47.4	***42.6***
4	24.125	0.23	3	24	109.34	4.56	6.29	5	7	2.17	32.88	9.01	$9.19	$18.56	11.61	51.6	***46.4***
4	24.125	0.23	3	24	109.34	4.56	6.29	5	9	2.79	43.15	11.10	$11.32	$18.56	12.43	55.2	***49.7***
4	24.125	0.23	3	24	109.34	4.56	6.29	5	11	3.41	53.00	13.19	$13.45	$18.56	13.14	58.4	***52.5***
4	24.125	0.23	3	24	109.34	4.56	6.29	5	13	4.03	62.00	15.27	$15.58	$18.56	13.75	61.1	***55.0***
4	24.125	0.23	3	24	109.34	4.56	6.29	6	5	2.20	31.21	9.22	$9.41	$18.56	11.47	50.9	***45.9***
4	24.125	0.23	3	24	109.34	4.56	6.29	6	7	3.08	45.74	12.23	$12.47	$18.56	12.62	56.1	***50.5***
4	24.125	0.23	3	24	109.34	4.56	6.29	6	9	3.96	59.18	15.23	$15.54	$18.56	13.57	60.2	***54.2***
4	24.125	0.23	3	24	109.34	4.56	6.29	6	11	4.84	71.24	18.23	$18.60	$18.56	14.34	63.7	***57.3***
4	24.125	0.23	3	24	109.34	4.56	6.29	6	13	5.72	82.91	21.24	$21.66	$18.56	15.04	66.8	***60.1***
4	24.125	0.23	3	30	109.34	3.64	5.03	3	5	0.55	8.06	3.25	$3.32	$18.56	9.37	33.3	***30.0***
4	24.125	0.23	3	30	109.34	3.64	5.03	3	7	0.77	12.03	4.00	$4.08	$18.56	9.93	35.3	***31.8***
4	24.125	0.23	3	30	109.34	3.64	5.03	3	9	0.99	15.94	4.75	$4.85	$18.56	10.44	37.1	***33.4***
4	24.125	0.23	3	30	109.34	3.64	5.03	3	11	1.21	19.82	5.51	$5.62	$18.56	10.90	38.7	***34.9***
4	24.125	0.23	3	30	109.34	3.64	5.03	3	13	1.43	23.65	6.26	$6.38	$18.56	11.33	40.3	***36.2***
4	24.125	0.23	3	30	109.34	3.64	5.03	4	5	1.00	14.53	4.71	$4.80	$18.56	10.26	36.4	***32.8***
4	24.125	0.23	3	30	109.34	3.64	5.03	4	7	1.40	21.59	6.05	$6.17	$18.56	11.10	39.4	***35.5***
4	24.125	0.23	3	30	109.34	3.64	5.03	4	9	1.80	28.47	7.38	$7.53	$18.56	11.84	42.1	***37.8***
4	24.125	0.23	3	30	109.34	3.64	5.03	4	11	2.20	35.24	8.72	$8.89	$18.56	12.50	44.4	***40.0***
4	24.125	0.23	3	30	109.34	3.64	5.03	4	13	2.60	41.82	10.05	$10.26	$18.56	13.09	46.5	***41.9***
4	24.125	0.23	3	30	109.34	3.64	5.03	5	5	1.55	22.26	6.59	$6.72	$18.56	11.18	39.7	***35.7***
4	24.125	0.23	3	30	109.34	3.64	5.03	5	7	2.17	32.88	8.67	$8.84	$18.56	12.27	43.6	***39.2***
4	24.125	0.23	3	30	109.34	3.64	5.03	5	9	2.79	43.15	10.76	$10.97	$18.56	13.21	46.9	***42.2***
4	24.125	0.23	3	30	109.34	3.64	5.03	5	11	3.41	53.00	12.84	$13.10	$18.56	14.03	49.8	***44.9***
4	24.125	0.23	3	30	109.34	3.64	5.03	5	13	4.03	62.00	14.93	$15.23	$18.56	14.72	52.3	***47.1***
4	24.125	0.23	3	30	109.34	3.64	5.03	6	5	2.20	31.21	8.88	$9.06	$18.56	12.11	43.0	***38.7***
4	24.125	0.23	3	30	109.34	3.64	5.03	6	7	3.08	45.74	11.88	$12.12	$18.56	13.43	47.7	***42.9***
4	24.125	0.23	3	30	109.34	3.64	5.03	6	9	3.96	59.18	14.89	$15.19	$18.56	14.51	51.5	***46.4***
4	24.125	0.23	3	30	109.34	3.64	5.03	6	11	4.84	71.24	17.89	$18.25	$18.56	15.38	54.7	***49.2***
4	24.125	0.23	3	30	109.34	3.64	5.03	6	13	5.72	82.91	20.90	$21.31	$18.56	16.18	57.5	***51.7***

White Text - inadequate temperature and shrinkage steel
Italic Text - inadequate structural capacity
Highlighted Row - good design – valid for use

1 in. = 25.4 mm
1 ft = 0.3048 m
1 kip = 4.448 kN

Table B-1 (continued). Barrier End Section Strength and Cost Calculations for All Configurations

Top Width (in)	Base Width (in)	Concrete Volume (yd^3 / ft)	Stirrups					Longitudinal Steel				Weight of Steel (lb / ft)	Cost of Steel ($ / ft)	Cost of Concrete ($ / ft)	Yield Line Calculations		
			Bar #	Spacing (in)	Length (in)	Length / ft (ft / ft)	M_C (k-ft / ft)	Bar #	Quantity	A_s (in^2)	M_w (k-ft / ft)				L_{CR} (ft)	ΦR_w (kips)	ΦR_w (kips)
4	24.125	0.23	3	36	109.34	3.04	4.19	3	5	0.55	8.06	3.02	$3.08	$18.56	9.61	28.4	***25.6***
4	24.125	0.23	3	36	109.34	3.04	4.19	3	7	0.77	12.03	3.77	$3.85	$18.56	10.25	30.3	***27.3***
4	24.125	0.23	3	36	109.34	3.04	4.19	3	9	0.99	15.94	4.53	$4.62	$18.56	10.82	32.0	***28.8***
4	24.125	0.23	3	36	109.34	3.04	4.19	3	11	1.21	19.82	5.28	$5.38	$18.56	11.34	33.6	***30.2***
4	24.125	0.23	3	36	109.34	3.04	4.19	3	13	1.43	23.65	6.03	$6.15	$18.56	11.83	35.0	***31.5***
4	24.125	0.23	3	36	109.34	3.04	4.19	4	5	1.00	14.53	4.48	$4.57	$18.56	10.62	31.4	***28.3***
4	24.125	0.23	3	36	109.34	3.04	4.19	4	7	1.40	21.59	5.82	$5.93	$18.56	11.57	34.3	***30.8***
4	24.125	0.23	3	36	109.34	3.04	4.19	4	9	1.80	28.47	7.15	$7.30	$18.56	12.40	36.7	***33.0***
4	24.125	0.23	3	36	109.34	3.04	4.19	4	11	2.20	35.24	8.49	$8.66	$18.56	13.13	38.9	***35.0***
4	24.125	0.23	3	36	109.34	3.04	4.19	4	13	2.60	41.82	9.83	$10.02	$18.56	13.80	40.9	***36.8***
4	24.125	0.23	3	36	109.34	3.04	4.19	5	5	1.55	22.26	6.36	$6.48	$18.56	11.66	34.5	***31.1***
4	24.125	0.23	3	36	109.34	3.04	4.19	5	7	2.17	32.88	8.44	$8.61	$18.56	12.88	38.1	***34.3***
4	24.125	0.23	3	36	109.34	3.04	4.19	5	9	2.79	43.15	10.53	$10.74	$18.56	13.93	41.2	***37.1***
4	24.125	0.23	3	36	109.34	3.04	4.19	5	11	3.41	53.00	12.61	$12.87	$18.56	14.84	43.9	***39.5***
4	24.125	0.23	3	36	109.34	3.04	4.19	5	13	4.03	62.00	14.70	$14.99	$18.56	15.60	46.2	***41.6***
4	24.125	0.23	3	36	109.34	3.04	4.19	6	5	2.20	31.21	8.65	$8.82	$18.56	12.70	37.6	***33.8***
4	24.125	0.23	3	36	109.34	3.04	4.19	6	7	3.08	45.74	11.66	$11.89	$18.56	14.18	42.0	***37.8***
4	24.125	0.23	3	36	109.34	3.04	4.19	6	9	3.96	59.18	14.66	$14.95	$18.56	15.37	45.5	***41.0***
4	24.125	0.23	3	36	109.34	3.04	4.19	6	11	4.84	71.24	17.66	$18.02	$18.56	16.34	48.4	***43.5***
4	24.125	0.23	3	36	109.34	3.04	4.19	6	13	5.72	82.91	20.67	$21.08	$18.56	17.22	51.0	***45.9***
4	24.125	0.23	4	12	110.91	9.24	22.42	3	5	0.55	8.06	8.05	$8.21	$18.56	8.35	132.1	***118.9***
4	24.125	0.23	4	12	110.91	9.24	22.42	3	7	0.77	12.03	8.81	$8.98	$18.56	8.51	134.6	***121.1***
4	24.125	0.23	4	12	110.91	9.24	22.42	3	9	0.99	15.94	9.56	$9.75	$18.56	8.66	137.0	***123.3***
4	24.125	0.23	4	12	110.91	9.24	22.42	3	11	1.21	19.82	10.31	$10.52	$18.56	8.81	139.3	***125.4***
4	24.125	0.23	4	12	110.91	9.24	22.42	3	13	1.43	23.65	11.06	$11.28	$18.56	8.95	141.6	***127.4***
4	24.125	0.23	4	12	110.91	9.24	22.42	4	5	1.00	14.53	9.51	$9.70	$18.56	8.60	136.2	***122.5***
4	24.125	0.23	4	12	110.91	9.24	22.42	4	7	1.40	21.59	10.85	$11.07	$18.56	8.87	140.4	***126.3***
4	24.125	0.23	4	12	110.91	9.24	22.42	4	9	1.80	28.47	12.19	$12.43	$18.56	9.12	144.3	***129.9***
4	24.125	0.23	4	12	110.91	9.24	22.42	4	11	2.20	35.24	13.52	$13.79	$18.56	9.35	147.9	***133.1***
4	24.125	0.23	4	12	110.91	9.24	22.42	4	13	2.60	41.82	14.86	$15.15	$18.56	9.57	151.4	***136.2***
4	24.125	0.23	4	12	110.91	9.24	22.42	5	5	1.55	22.26	11.39	$11.62	$18.56	8.90	140.8	***126.7***
4	24.125	0.23	4	12	110.91	9.24	22.42	5	7	2.17	32.88	13.47	$13.74	$18.56	9.27	146.7	***132.0***
4	24.125	0.23	4	12	110.91	9.24	22.42	5	9	2.79	43.15	15.56	$15.87	$18.56	9.61	152.0	***136.8***
4	24.125	0.23	4	12	110.91	9.24	22.42	5	11	3.41	53.00	17.65	$18.00	$18.56	9.91	156.9	***141.2***
4	24.125	0.23	4	12	110.91	9.24	22.42	5	13	4.03	62.00	19.73	$20.13	$18.56	10.18	161.1	***145.0***
4	24.125	0.23	4	12	110.91	9.24	22.42	6	5	2.20	31.21	13.68	$13.96	$18.56	9.21	145.8	***131.2***
4	24.125	0.23	4	12	110.91	9.24	22.42	6	7	3.08	45.74	16.69	$17.02	$18.56	9.69	153.3	***138.0***
4	24.125	0.23	4	12	110.91	9.24	22.42	6	9	3.96	59.18	19.69	$20.09	$18.56	10.10	159.8	***143.8***
4	24.125	0.23	4	12	110.91	9.24	22.42	6	11	4.84	71.24	22.70	$23.15	$18.56	10.44	165.2	***148.7***
4	24.125	0.23	4	12	110.91	9.24	22.42	6	13	5.72	82.91	25.70	$26.21	$18.56	10.76	170.3	***153.2***

White Text - inadequate temperature and shrinkage steel
Italic Text - inadequate structural capacity
Highlighted Row - good design – valid for use

1 in. = 25.4 mm
1 ft = 0.3048 m
1 kip = 4.448 kN

Table B-1 (continued). Barrier End Section Strength and Cost Calculations for All Configurations

Top Width (in)	Base Width (in)	Concrete Volume (yd^3 / ft)	Stirrups					Longitudinal Steel				Weight of Steel (lb / ft)	Cost of Steel ($ / ft)	Cost of Concrete ($ / ft)	Yield Line Calculations		
			Bar #	Spacing (in)	Length (in)	Length / ft (ft / ft)	M_C (k-ft / ft)	Bar #	Quantity	A_s (in^2)	M_w (k-ft / ft)				L_{CR} (ft)	ΦR_w (kips)	ΦR_w (kips)
4	24.125	0.23	4	18	110.91	6.16	15.06	3	5	0.55	8.06	6.00	$6.12	$18.56	8.51	90.4	***81.3***
4	24.125	0.23	4	18	110.91	6.16	15.06	3	7	0.77	12.03	6.75	$6.88	$18.56	8.73	92.8	***83.5***
4	24.125	0.23	4	18	110.91	6.16	15.06	3	9	0.99	15.94	7.50	$7.65	$18.56	8.95	95.1	***85.6***
4	24.125	0.23	4	18	110.91	6.16	15.06	3	11	1.21	19.82	8.25	$8.42	$18.56	9.15	97.3	***87.6***
4	24.125	0.23	4	18	110.91	6.16	15.06	3	13	1.43	23.65	9.00	$9.18	$18.56	9.35	99.4	***89.4***
4	24.125	0.23	4	18	110.91	6.16	15.06	4	5	1.00	14.53	7.46	$7.60	$18.56	8.87	94.3	***84.9***
4	24.125	0.23	4	18	110.91	6.16	15.06	4	7	1.40	21.59	8.79	$8.97	$18.56	9.25	98.3	***88.4***
4	24.125	0.23	4	18	110.91	6.16	15.06	4	9	1.80	28.47	10.13	$10.33	$18.56	9.58	101.9	***91.7***
4	24.125	0.23	4	18	110.91	6.16	15.06	4	11	2.20	35.24	11.46	$11.69	$18.56	9.90	105.2	***94.7***
4	24.125	0.23	4	18	110.91	6.16	15.06	4	13	2.60	41.82	12.80	$13.06	$18.56	10.19	108.3	***97.5***
4	24.125	0.23	4	18	110.91	6.16	15.06	5	5	1.55	22.26	9.33	$9.52	$18.56	9.28	98.6	***88.8***
4	24.125	0.23	4	18	110.91	6.16	15.06	5	7	2.17	32.88	11.42	$11.65	$18.56	9.79	104.1	***93.6***
4	24.125	0.23	4	18	110.91	6.16	15.06	5	9	2.79	43.15	13.50	$13.77	$18.56	10.25	108.9	***98.0***
4	24.125	0.23	4	18	110.91	6.16	15.06	5	11	3.41	53.00	15.59	$15.90	$18.56	10.65	113.2	***101.9***
4	24.125	0.23	4	18	110.91	6.16	15.06	5	13	4.03	62.00	17.67	$18.03	$18.56	11.00	116.9	***105.3***
4	24.125	0.23	4	18	110.91	6.16	15.06	6	5	2.20	31.21	11.63	$11.86	$18.56	9.71	103.2	***92.9***
4	24.125	0.23	4	18	110.91	6.16	15.06	6	7	3.08	45.74	14.63	$14.92	$18.56	10.36	110.0	***99.0***
4	24.125	0.23	4	18	110.91	6.16	15.06	6	9	3.96	59.18	17.63	$17.99	$18.56	10.90	115.8	***104.2***
4	24.125	0.23	4	18	110.91	6.16	15.06	6	11	4.84	71.24	20.64	$21.05	$18.56	11.35	120.6	***108.5***
4	24.125	0.23	4	18	110.91	6.16	15.06	6	13	5.72	82.91	23.64	$24.11	$18.56	11.76	125.0	***112.5***
4	24.125	0.23	4	24	110.91	4.62	11.33	3	5	0.55	8.06	4.97	$5.07	$18.56	8.66	69.3	***62.3***
4	24.125	0.23	4	24	110.91	4.62	11.33	3	7	0.77	12.03	5.72	$5.83	$18.56	8.95	71.6	***64.5***
4	24.125	0.23	4	24	110.91	4.62	11.33	3	9	0.99	15.94	6.47	$6.60	$18.56	9.22	73.8	***66.4***
4	24.125	0.23	4	24	110.91	4.62	11.33	3	11	1.21	19.82	7.22	$7.37	$18.56	9.48	75.8	***68.3***
4	24.125	0.23	4	24	110.91	4.62	11.33	3	13	1.43	23.65	7.97	$8.13	$18.56	9.72	77.8	***70.0***
4	24.125	0.23	4	24	110.91	4.62	11.33	4	5	1.00	14.53	6.43	$6.56	$18.56	9.13	73.0	***65.7***
4	24.125	0.23	4	24	110.91	4.62	11.33	4	7	1.40	21.59	7.76	$7.92	$18.56	9.59	76.8	***69.1***
4	24.125	0.23	4	24	110.91	4.62	11.33	4	9	1.80	28.47	9.10	$9.28	$18.56	10.01	80.1	***72.1***
4	24.125	0.23	4	24	110.91	4.62	11.33	4	11	2.20	35.24	10.43	$10.64	$18.56	10.40	83.2	***74.9***
4	24.125	0.23	4	24	110.91	4.62	11.33	4	13	2.60	41.82	11.77	$12.01	$18.56	10.75	86.0	***77.4***
4	24.125	0.23	4	24	110.91	4.62	11.33	5	5	1.55	22.26	8.30	$8.47	$18.56	9.64	77.1	***69.4***
4	24.125	0.23	4	24	110.91	4.62	11.33	5	7	2.17	32.88	10.39	$10.60	$18.56	10.27	82.1	***73.9***
4	24.125	0.23	4	24	110.91	4.62	11.33	5	9	2.79	43.15	12.47	$12.72	$18.56	10.82	86.6	***77.9***
4	24.125	0.23	4	24	110.91	4.62	11.33	5	11	3.41	53.00	14.56	$14.85	$18.56	11.32	90.5	***81.5***
4	24.125	0.23	4	24	110.91	4.62	11.33	5	13	4.03	62.00	16.65	$16.98	$18.56	11.74	93.9	***84.5***
4	24.125	0.23	4	24	110.91	4.62	11.33	6	5	2.20	31.21	10.60	$10.81	$18.56	10.17	81.4	***73.2***
4	24.125	0.23	4	24	110.91	4.62	11.33	6	7	3.08	45.74	13.60	$13.87	$18.56	10.96	87.7	***78.9***
4	24.125	0.23	4	24	110.91	4.62	11.33	6	9	3.96	59.18	16.60	$16.94	$18.56	11.61	92.9	***83.6***
4	24.125	0.23	4	24	110.91	4.62	11.33	6	11	4.84	71.24	19.61	$20.00	$18.56	12.15	97.2	***87.5***
4	24.125	0.23	4	24	110.91	4.62	11.33	6	13	5.72	82.91	22.61	$23.07	$18.56	12.64	101.2	***91.0***

White Text - inadequate temperature and shrinkage steel
Italic Text - inadequate structural capacity
Highlighted Row - good design – valid for use

1 in. = 25.4 mm
1 ft = 0.3048 m
1 kip = 4.448 kN

Table B-1 (continued). Barrier End Section Strength and Cost Calculations for All Configurations

Top Width (in)	Base Width (in)	Concrete Volume (yd^3 / ft)	Stirrups					Longitudinal Steel				Weight of Steel (lb / ft)	Cost of Steel ($ / ft)	Cost of Concrete ($ / ft)	Yield Line Calculations		
			Bar #	Spacing (in)	Length (in)	Length / ft (ft / ft)	M_C (k-ft / ft)	Bar #	Quantity	A_s (in^2)	M_w (k-ft / ft)				L_{CR} (ft)	ΦR_w (kips)	ΦR_w (kips)
4	24.125	0.23	4	30	110.91	3.70	9.10	3	5	0.55	8.06	4.35	$4.44	$18.56	8.81	56.6	***50.9***
4	24.125	0.23	4	30	110.91	3.70	9.10	3	7	0.77	12.03	5.10	$5.20	$18.56	9.16	58.8	***52.9***
4	24.125	0.23	4	30	110.91	3.70	9.10	3	9	0.99	15.94	5.85	$5.97	$18.56	9.48	60.9	***54.8***
4	24.125	0.23	4	30	110.91	3.70	9.10	3	11	1.21	19.82	6.61	$6.74	$18.56	9.79	62.9	***56.6***
4	24.125	0.23	4	30	110.91	3.70	9.10	3	13	1.43	23.65	7.36	$7.50	$18.56	10.07	64.7	***58.2***
4	24.125	0.23	4	30	110.91	3.70	9.10	4	5	1.00	14.53	5.81	$5.93	$18.56	9.37	60.2	***54.2***
4	24.125	0.23	4	30	110.91	3.70	9.10	4	7	1.40	21.59	7.15	$7.29	$18.56	9.92	63.7	***57.3***
4	24.125	0.23	4	30	110.91	3.70	9.10	4	9	1.80	28.47	8.48	$8.65	$18.56	10.41	66.9	***60.2***
4	24.125	0.23	4	30	110.91	3.70	9.10	4	11	2.20	35.24	9.82	$10.01	$18.56	10.86	69.8	***62.8***
4	24.125	0.23	4	30	110.91	3.70	9.10	4	13	2.60	41.82	11.15	$11.38	$18.56	11.27	72.4	***65.2***
4	24.125	0.23	4	30	110.91	3.70	9.10	5	5	1.55	22.26	7.68	$7.84	$18.56	9.97	64.0	***57.6***
4	24.125	0.23	4	30	110.91	3.70	9.10	5	7	2.17	32.88	9.77	$9.97	$18.56	10.71	68.8	***61.9***
4	24.125	0.23	4	30	110.91	3.70	9.10	5	9	2.79	43.15	11.86	$12.09	$18.56	11.35	72.9	***65.6***
4	24.125	0.23	4	30	110.91	3.70	9.10	5	11	3.41	53.00	13.94	$14.22	$18.56	11.92	76.6	***68.9***
4	24.125	0.23	4	30	110.91	3.70	9.10	5	13	4.03	62.00	16.03	$16.35	$18.56	12.41	79.7	***71.7***
4	24.125	0.23	4	30	110.91	3.70	9.10	6	5	2.20	31.21	9.98	$10.18	$18.56	10.60	68.1	***61.3***
4	24.125	0.23	4	30	110.91	3.70	9.10	6	7	3.08	45.74	12.98	$13.24	$18.56	11.51	73.9	***66.5***
4	24.125	0.23	4	30	110.91	3.70	9.10	6	9	3.96	59.18	15.99	$16.31	$18.56	12.26	78.7	***70.9***
4	24.125	0.23	4	30	110.91	3.70	9.10	6	11	4.84	71.24	18.99	$19.37	$18.56	12.88	82.7	***74.5***
4	24.125	0.23	4	30	110.91	3.70	9.10	6	13	5.72	82.91	22.00	$22.44	$18.56	13.44	86.3	***77.7***
4	24.125	0.23	4	36	110.91	3.08	7.61	3	5	0.55	8.06	3.94	$4.02	$18.56	8.95	48.1	***43.3***
4	24.125	0.23	4	36	110.91	3.08	7.61	3	7	0.77	12.03	4.69	$4.78	$18.56	9.36	50.3	***45.2***
4	24.125	0.23	4	36	110.91	3.08	7.61	3	9	0.99	15.94	5.44	$5.55	$18.56	9.73	52.3	***47.0***
4	24.125	0.23	4	36	110.91	3.08	7.61	3	11	1.21	19.82	6.19	$6.32	$18.56	10.08	54.1	***48.7***
4	24.125	0.23	4	36	110.91	3.08	7.61	3	13	1.43	23.65	6.95	$7.08	$18.56	10.40	55.9	***50.3***
4	24.125	0.23	4	36	110.91	3.08	7.61	4	5	1.00	14.53	5.40	$5.51	$18.56	9.60	51.6	***46.4***
4	24.125	0.23	4	36	110.91	3.08	7.61	4	7	1.40	21.59	6.73	$6.87	$18.56	10.23	54.9	***49.4***
4	24.125	0.23	4	36	110.91	3.08	7.61	4	9	1.80	28.47	8.07	$8.23	$18.56	10.78	57.9	***52.1***
4	24.125	0.23	4	36	110.91	3.08	7.61	4	11	2.20	35.24	9.41	$9.59	$18.56	11.29	60.7	***54.6***
4	24.125	0.23	4	36	110.91	3.08	7.61	4	13	2.60	41.82	10.74	$10.96	$18.56	11.75	63.1	***56.8***
4	24.125	0.23	4	36	110.91	3.08	7.61	5	5	1.55	22.26	7.27	$7.42	$18.56	10.28	55.2	***49.7***
4	24.125	0.23	4	36	110.91	3.08	7.61	5	7	2.17	32.88	9.36	$9.55	$18.56	11.12	59.7	***53.8***
4	24.125	0.23	4	36	110.91	3.08	7.61	5	9	2.79	43.15	11.44	$11.67	$18.56	11.84	63.6	***57.3***
4	24.125	0.23	4	36	110.91	3.08	7.61	5	11	3.41	53.00	13.53	$13.80	$18.56	12.48	67.0	***60.3***
4	24.125	0.23	4	36	110.91	3.08	7.61	5	13	4.03	62.00	15.62	$15.93	$18.56	13.02	70.0	***63.0***
4	24.125	0.23	4	36	110.91	3.08	7.61	6	5	2.20	31.21	9.57	$9.76	$18.56	10.99	59.1	***53.2***
4	24.125	0.23	4	36	110.91	3.08	7.61	6	7	3.08	45.74	12.57	$12.82	$18.56	12.01	64.6	***58.1***
4	24.125	0.23	4	36	110.91	3.08	7.61	6	9	3.96	59.18	15.58	$15.89	$18.56	12.86	69.1	***62.2***
4	24.125	0.23	4	36	110.91	3.08	7.61	6	11	4.84	71.24	18.58	$18.95	$18.56	13.55	72.8	***65.5***
4	24.125	0.23	4	36	110.91	3.08	7.61	6	13	5.72	82.91	21.58	$22.02	$18.56	14.17	76.1	***68.5***

White Text - inadequate temperature and shrinkage steel
Italic Text - inadequate structural capacity
Highlighted Row - good design – valid for use

1 in. = 25.4 mm
1 ft = 0.3048 m
1 kip = 4.448 kN

Table B-1 (continued). Barrier End Section Strength and Cost Calculations for All Configurations

Top Width (in)	Base Width (in)	Concrete Volume (yd^3 / ft)	Stirrups					Longitudinal Steel				Weight of Steel (lb / ft)	Cost of Steel ($ / ft)	Cost of Concrete ($ / ft)	Yield Line Calculations		
			Bar #	Spacing (in)	Length (in)	Length / ft (ft / ft)	M_C (k-ft / ft)	Bar #	Quantity	A_s (in^2)	M_w (k-ft / ft)				L_{CR} (ft)	ΦR_w (kips)	ΦR_w (kips)
4	24.125	0.23	5	12	111.60	9.30	34.25	3	5	0.55	8.06	11.58	$11.81	$18.56	8.23	199.0	***179.1***
4	24.125	0.23	5	12	111.60	9.30	34.25	3	7	0.77	12.03	12.33	$12.58	$18.56	8.34	201.6	***181.4***
4	24.125	0.23	5	12	111.60	9.30	34.25	3	9	0.99	15.94	13.08	$13.35	$18.56	8.44	204.1	***183.7***
4	24.125	0.23	5	12	111.60	9.30	34.25	3	11	1.21	19.82	13.84	$14.11	$18.56	8.54	206.6	***185.9***
4	24.125	0.23	5	12	111.60	9.30	34.25	3	13	1.43	23.65	14.59	$14.88	$18.56	8.64	208.9	***188.0***
4	24.125	0.23	5	12	111.60	9.30	34.25	4	5	1.00	14.53	13.04	$13.30	$18.56	8.41	203.2	***182.9***
4	24.125	0.23	5	12	111.60	9.30	34.25	4	7	1.40	21.59	14.38	$14.66	$18.56	8.59	207.7	***186.9***
4	24.125	0.23	5	12	111.60	9.30	34.25	4	9	1.80	28.47	15.71	$16.03	$18.56	8.76	211.8	***190.6***
4	24.125	0.23	5	12	111.60	9.30	34.25	4	11	2.20	35.24	17.05	$17.39	$18.56	8.93	215.8	***194.2***
4	24.125	0.23	5	12	111.60	9.30	34.25	4	13	2.60	41.82	18.38	$18.75	$18.56	9.08	219.5	***197.6***
4	24.125	0.23	5	12	111.60	9.30	34.25	5	5	1.55	22.26	14.92	$15.21	$18.56	8.61	208.1	***187.3***
4	24.125	0.23	5	12	111.60	9.30	34.25	5	7	2.17	32.88	17.00	$17.34	$18.56	8.87	214.4	***193.0***
4	24.125	0.23	5	12	111.60	9.30	34.25	5	9	2.79	43.15	19.09	$19.47	$18.56	9.11	220.3	***198.2***
4	24.125	0.23	5	12	111.60	9.30	34.25	5	11	3.41	53.00	21.17	$21.60	$18.56	9.33	225.6	***203.0***
4	24.125	0.23	5	12	111.60	9.30	34.25	5	13	4.03	62.00	23.26	$23.72	$18.56	9.53	230.3	***207.3***
4	24.125	0.23	5	12	111.60	9.30	34.25	6	5	2.20	31.21	17.21	$17.55	$18.56	8.83	213.4	***192.1***
4	24.125	0.23	5	12	111.60	9.30	34.25	6	7	3.08	45.74	20.21	$20.62	$18.56	9.17	221.7	***199.5***
4	24.125	0.23	5	12	111.60	9.30	34.25	6	9	3.96	59.18	23.22	$23.68	$18.56	9.47	228.8	***206.0***
4	24.125	0.23	5	12	111.60	9.30	34.25	6	11	4.84	71.24	26.22	$26.75	$18.56	9.72	234.9	***211.5***
4	24.125	0.23	5	12	111.60	9.30	34.25	6	13	5.72	82.91	29.23	$29.81	$18.56	9.95	240.6	216.6
4	24.125	0.23	5	18	111.60	6.20	23.11	3	5	0.55	8.06	8.35	$8.51	$18.56	8.34	136.0	***122.4***
4	24.125	0.23	5	18	111.60	6.20	23.11	3	7	0.77	12.03	9.10	$9.28	$18.56	8.49	138.5	***124.7***
4	24.125	0.23	5	18	111.60	6.20	23.11	3	9	0.99	15.94	9.85	$10.05	$18.56	8.64	141.0	***126.9***
4	24.125	0.23	5	18	111.60	6.20	23.11	3	11	1.21	19.82	10.60	$10.81	$18.56	8.78	143.3	***129.0***
4	24.125	0.23	5	18	111.60	6.20	23.11	3	13	1.43	23.65	11.35	$11.58	$18.56	8.92	145.5	***131.0***
4	24.125	0.23	5	18	111.60	6.20	23.11	4	5	1.00	14.53	9.81	$10.00	$18.56	8.59	140.1	***126.1***
4	24.125	0.23	5	18	111.60	6.20	23.11	4	7	1.40	21.59	11.14	$11.37	$18.56	8.85	144.3	***129.9***
4	24.125	0.23	5	18	111.60	6.20	23.11	4	9	1.80	28.47	12.48	$12.73	$18.56	9.09	148.3	***133.4***
4	24.125	0.23	5	18	111.60	6.20	23.11	4	11	2.20	35.24	13.81	$14.09	$18.56	9.31	151.9	***136.8***
4	24.125	0.23	5	18	111.60	6.20	23.11	4	13	2.60	41.82	15.15	$15.45	$18.56	9.53	155.4	***139.9***
4	24.125	0.23	5	18	111.60	6.20	23.11	5	5	1.55	22.26	11.68	$11.92	$18.56	8.87	144.7	***130.3***
4	24.125	0.23	5	18	111.60	6.20	23.11	5	7	2.17	32.88	13.77	$14.04	$18.56	9.24	150.7	***135.6***
4	24.125	0.23	5	18	111.60	6.20	23.11	5	9	2.79	43.15	15.85	$16.17	$18.56	9.57	156.1	***140.5***
4	24.125	0.23	5	18	111.60	6.20	23.11	5	11	3.41	53.00	17.94	$18.30	$18.56	9.87	161.0	***144.9***
4	24.125	0.23	5	18	111.60	6.20	23.11	5	13	4.03	62.00	20.03	$20.43	$18.56	10.13	165.2	***148.7***
4	24.125	0.23	5	18	111.60	6.20	23.11	6	5	2.20	31.21	13.98	$14.26	$18.56	9.18	149.8	***134.8***
4	24.125	0.23	5	18	111.60	6.20	23.11	6	7	3.08	45.74	16.98	$17.32	$18.56	9.65	157.4	***141.6***
4	24.125	0.23	5	18	111.60	6.20	23.11	6	9	3.96	59.18	19.98	$20.38	$18.56	10.05	163.9	***147.5***
4	24.125	0.23	5	18	111.60	6.20	23.11	6	11	4.84	71.24	22.99	$23.45	$18.56	10.38	169.4	***152.4***
4	24.125	0.23	5	18	111.60	6.20	23.11	6	13	5.72	82.91	25.99	$26.51	$18.56	10.69	174.4	***157.0***

White Text - inadequate temperature and shrinkage steel
Italic Text - inadequate structural capacity
Highlighted Row - good design – valid for use

1 in. = 25.4 mm
1 ft = 0.3048 m
1 kip = 4.448 kN

Table B-1 (continued). Barrier End Section Strength and Cost Calculations for All Configurations

Top Width (in)	Base Width (in)	Concrete Volume (yd^3 / ft)	Stirrups					Longitudinal Steel				Weight of Steel (lb / ft)	Cost of Steel ($ / ft)	Cost of Concrete ($ / ft)	Yield Line Calculations		
			Bar #	Spacing (in)	Length (in)	Length / ft (ft / ft)	M_C (k-ft / ft)	Bar #	Quantity	A_s (in^2)	M_w (k-ft / ft)				L_{CR} (ft)	ΦR_w (kips)	ΦR_w (kips)
4	24.125	0.23	5	24	111.60	4.65	17.46	3	5	0.55	8.06	6.73	$6.86	$18.56	8.44	104.0	***93.6***
4	24.125	0.23	5	24	111.60	4.65	17.46	3	7	0.77	12.03	7.48	$7.63	$18.56	8.64	106.5	***95.8***
4	24.125	0.23	5	24	111.60	4.65	17.46	3	9	0.99	15.94	8.23	$8.40	$18.56	8.83	108.8	***97.9***
4	24.125	0.23	5	24	111.60	4.65	17.46	3	11	1.21	19.82	8.99	$9.17	$18.56	9.01	111.1	***99.9***
4	24.125	0.23	5	24	111.60	4.65	17.46	3	13	1.43	23.65	9.74	$9.93	$18.56	9.18	113.2	***101.9***
4	24.125	0.23	5	24	111.60	4.65	17.46	4	5	1.00	14.53	8.19	$8.35	$18.56	8.76	108.0	***97.2***
4	24.125	0.23	5	24	111.60	4.65	17.46	4	7	1.40	21.59	9.53	$9.72	$18.56	9.09	112.0	***100.8***
4	24.125	0.23	5	24	111.60	4.65	17.46	4	9	1.80	28.47	10.86	$11.08	$18.56	9.39	115.8	***104.2***
4	24.125	0.23	5	24	111.60	4.65	17.46	4	11	2.20	35.24	12.20	$12.44	$18.56	9.67	119.2	***107.3***
4	24.125	0.23	5	24	111.60	4.65	17.46	4	13	2.60	41.82	13.53	$13.80	$18.56	9.94	122.4	***110.2***
4	24.125	0.23	5	24	111.60	4.65	17.46	5	5	1.55	22.26	10.07	$10.27	$18.56	9.12	112.4	***101.2***
4	24.125	0.23	5	24	111.60	4.65	17.46	5	7	2.17	32.88	12.15	$12.39	$18.56	9.58	118.0	***106.2***
4	24.125	0.23	5	24	111.60	4.65	17.46	5	9	2.79	43.15	14.24	$14.52	$18.56	9.99	123.1	***110.8***
4	24.125	0.23	5	24	111.60	4.65	17.46	5	11	3.41	53.00	16.32	$16.65	$18.56	10.35	127.6	***114.8***
4	24.125	0.23	5	24	111.60	4.65	17.46	5	13	4.03	62.00	18.41	$18.78	$18.56	10.67	131.5	***118.4***
4	24.125	0.23	5	24	111.60	4.65	17.46	6	5	2.20	31.21	12.36	$12.61	$18.56	9.51	117.2	***105.5***
4	24.125	0.23	5	24	111.60	4.65	17.46	6	7	3.08	45.74	15.36	$15.67	$18.56	10.09	124.3	***111.9***
4	24.125	0.23	5	24	111.60	4.65	17.46	6	9	3.96	59.18	18.37	$18.74	$18.56	10.57	130.3	***117.3***
4	24.125	0.23	5	24	111.60	4.65	17.46	6	11	4.84	71.24	21.37	$21.80	$18.56	10.98	135.3	***121.8***
4	24.125	0.23	5	24	111.60	4.65	17.46	6	13	5.72	82.91	24.38	$24.86	$18.56	11.36	140.0	***126.0***
4	24.125	0.23	5	30	111.60	3.72	14.03	3	5	0.55	8.06	5.76	$5.88	$18.56	8.54	84.6	***76.1***
4	24.125	0.23	5	30	111.60	3.72	14.03	3	7	0.77	12.03	6.51	$6.64	$18.56	8.78	87.0	***78.3***
4	24.125	0.23	5	30	111.60	3.72	14.03	3	9	0.99	15.94	7.26	$7.41	$18.56	9.01	89.3	***80.3***
4	24.125	0.23	5	30	111.60	3.72	14.03	3	11	1.21	19.82	8.02	$8.18	$18.56	9.23	91.4	***82.3***
4	24.125	0.23	5	30	111.60	3.72	14.03	3	13	1.43	23.65	8.77	$8.94	$18.56	9.43	93.5	***84.1***
4	24.125	0.23	5	30	111.60	3.72	14.03	4	5	1.00	14.53	7.22	$7.36	$18.56	8.93	88.5	***79.6***
4	24.125	0.23	5	30	111.60	3.72	14.03	4	7	1.40	21.59	8.56	$8.73	$18.56	9.32	92.4	***83.1***
4	24.125	0.23	5	30	111.60	3.72	14.03	4	9	1.80	28.47	9.89	$10.09	$18.56	9.68	95.9	***86.3***
4	24.125	0.23	5	30	111.60	3.72	14.03	4	11	2.20	35.24	11.23	$11.45	$18.56	10.01	99.2	***89.3***
4	24.125	0.23	5	30	111.60	3.72	14.03	4	13	2.60	41.82	12.56	$12.82	$18.56	10.32	102.2	***92.0***
4	24.125	0.23	5	30	111.60	3.72	14.03	5	5	1.55	22.26	9.10	$9.28	$18.56	9.36	92.7	***83.5***
4	24.125	0.23	5	30	111.60	3.72	14.03	5	7	2.17	32.88	11.18	$11.40	$18.56	9.90	98.1	***88.3***
4	24.125	0.23	5	30	111.60	3.72	14.03	5	9	2.79	43.15	13.27	$13.53	$18.56	10.38	102.8	***92.5***
4	24.125	0.23	5	30	111.60	3.72	14.03	5	11	3.41	53.00	15.35	$15.66	$18.56	10.81	107.0	***96.3***
4	24.125	0.23	5	30	111.60	3.72	14.03	5	13	4.03	62.00	17.44	$17.79	$18.56	11.17	110.7	***99.6***
4	24.125	0.23	5	30	111.60	3.72	14.03	6	5	2.20	31.21	11.39	$11.62	$18.56	9.82	97.3	***87.5***
4	24.125	0.23	5	30	111.60	3.72	14.03	6	7	3.08	45.74	14.39	$14.68	$18.56	10.49	103.9	***93.6***
4	24.125	0.23	5	30	111.60	3.72	14.03	6	9	3.96	59.18	17.40	$17.75	$18.56	11.06	109.6	***98.6***
4	24.125	0.23	5	30	111.60	3.72	14.03	6	11	4.84	71.24	20.40	$20.81	$18.56	11.53	114.2	***102.8***
4	24.125	0.23	5	30	111.60	3.72	14.03	6	13	5.72	82.91	23.41	$23.87	$18.56	11.96	118.5	***106.7***

White Text - inadequate temperature and shrinkage steel
Italic Text - inadequate structural capacity
Highlighted Row - good design – valid for use

1 in. = 25.4 mm
1 ft = 0.3048 m
1 kip = 4.448 kN

Table B-1 (continued). Barrier End Section Strength and Cost Calculations for All Configurations

Top Width (in)	Base Width (in)	Concrete Volume (yd^3 / ft)	Stirrups					Longitudinal Steel				Weight of Steel (lb / ft)	Cost of Steel ($ / ft)	Cost of Concrete ($ / ft)	Yield Line Calculations		
			Bar #	Spacing (in)	Length (in)	Length / ft (ft / ft)	M_C (k-ft / ft)	Bar #	Quantity	A_s (in^2)	M_w (k-ft / ft)				L_{CR} (ft)	ΦR_w (kips)	ΦR_w (kips)
4	24.125	0.23	5	36	111.60	3.10	11.72	3	5	0.55	8.06	5.11	$5.22	$18.56	8.64	71.5	***64.3***
4	24.125	0.23	5	36	111.60	3.10	11.72	3	7	0.77	12.03	5.87	$5.98	$18.56	8.92	73.8	***66.5***
4	24.125	0.23	5	36	111.60	3.10	11.72	3	9	0.99	15.94	6.62	$6.75	$18.56	9.19	76.0	***68.4***
4	24.125	0.23	5	36	111.60	3.10	11.72	3	11	1.21	19.82	7.37	$7.52	$18.56	9.44	78.1	***70.3***
4	24.125	0.23	5	36	111.60	3.10	11.72	3	13	1.43	23.65	8.12	$8.28	$18.56	9.67	80.0	***72.0***
4	24.125	0.23	5	36	111.60	3.10	11.72	4	5	1.00	14.53	6.57	$6.70	$18.56	9.09	75.2	***67.7***
4	24.125	0.23	5	36	111.60	3.10	11.72	4	7	1.40	21.59	7.91	$8.07	$18.56	9.55	79.0	***71.1***
4	24.125	0.23	5	36	111.60	3.10	11.72	4	9	1.80	28.47	9.25	$9.43	$18.56	9.96	82.4	***74.2***
4	24.125	0.23	5	36	111.60	3.10	11.72	4	11	2.20	35.24	10.58	$10.79	$18.56	10.33	85.5	***77.0***
4	24.125	0.23	5	36	111.60	3.10	11.72	4	13	2.60	41.82	11.92	$12.16	$18.56	10.68	88.4	***79.5***
4	24.125	0.23	5	36	111.60	3.10	11.72	5	5	1.55	22.26	8.45	$8.62	$18.56	9.59	79.4	***71.4***
4	24.125	0.23	5	36	111.60	3.10	11.72	5	7	2.17	32.88	10.53	$10.75	$18.56	10.21	84.5	***76.0***
4	24.125	0.23	5	36	111.60	3.10	11.72	5	9	2.79	43.15	12.62	$12.87	$18.56	10.75	88.9	***80.0***
4	24.125	0.23	5	36	111.60	3.10	11.72	5	11	3.41	53.00	14.71	$15.00	$18.56	11.23	92.9	***83.6***
4	24.125	0.23	5	36	111.60	3.10	11.72	5	13	4.03	62.00	16.79	$17.13	$18.56	11.65	96.4	***86.7***
4	24.125	0.23	5	36	111.60	3.10	11.72	6	5	2.20	31.21	10.74	$10.96	$18.56	10.11	83.7	***75.3***
4	24.125	0.23	5	36	111.60	3.10	11.72	6	7	3.08	45.74	13.75	$14.02	$18.56	10.88	90.0	***81.0***
4	24.125	0.23	5	36	111.60	3.10	11.72	6	9	3.96	59.18	16.75	$17.09	$18.56	11.52	95.3	***85.8***
4	24.125	0.23	5	36	111.60	3.10	11.72	6	11	4.84	71.24	19.76	$20.15	$18.56	12.05	99.7	***89.7***
4	24.125	0.23	5	36	111.60	3.10	11.72	6	13	5.72	82.91	22.76	$23.21	$18.56	12.53	103.7	***93.3***
4	24.125	0.23	6	12	122.74	10.23	47.75	3	5	0.55	8.06	17.24	$17.59	$18.56	8.17	275.2	247.7
4	24.125	0.23	6	12	122.74	10.23	47.75	3	7	0.77	12.03	17.99	$18.35	$18.56	8.25	277.9	250.1
4	24.125	0.23	6	12	122.74	10.23	47.75	3	9	0.99	15.94	18.75	$19.12	$18.56	8.32	280.5	252.5
4	24.125	0.23	6	12	122.74	10.23	47.75	3	11	1.21	19.82	19.50	$19.89	$18.56	8.40	283.0	254.7
4	24.125	0.23	6	12	122.74	10.23	47.75	3	13	1.43	23.65	20.25	$20.66	$18.56	8.47	285.5	256.9
4	24.125	0.23	6	12	122.74	10.23	47.75	4	5	1.00	14.53	18.70	$19.08	$18.56	8.29	279.6	251.6
4	24.125	0.23	6	12	122.74	10.23	47.75	4	7	1.40	21.59	20.04	$20.44	$18.56	8.43	284.2	255.7
4	24.125	0.23	6	12	122.74	10.23	47.75	4	9	1.80	28.47	21.37	$21.80	$18.56	8.56	288.5	259.6
4	24.125	0.23	6	12	122.74	10.23	47.75	4	11	2.20	35.24	22.71	$23.17	$18.56	8.68	292.6	263.4
4	24.125	0.23	6	12	122.74	10.23	47.75	4	13	2.60	41.82	24.05	$24.53	$18.56	8.80	296.6	266.9
4	24.125	0.23	6	12	122.74	10.23	47.75	5	5	1.55	22.26	20.58	$20.99	$18.56	8.44	284.6	256.1
4	24.125	0.23	6	12	122.74	10.23	47.75	5	7	2.17	32.88	22.66	$23.12	$18.56	8.64	291.2	262.1
4	24.125	0.23	6	12	122.74	10.23	47.75	5	9	2.79	43.15	24.75	$25.24	$18.56	8.82	297.4	267.6
4	24.125	0.23	6	12	122.74	10.23	47.75	5	11	3.41	53.00	26.84	$27.37	$18.56	8.99	303.1	272.7
4	24.125	0.23	6	12	122.74	10.23	47.75	5	13	4.03	62.00	28.92	$29.50	$18.56	9.14	308.1	277.3
4	24.125	0.23	6	12	122.74	10.23	47.75	6	5	2.20	31.21	22.87	$23.33	$18.56	8.61	290.2	261.2
4	24.125	0.23	6	12	122.74	10.23	47.75	6	7	3.08	45.74	25.88	$26.39	$18.56	8.87	298.9	269.0
4	24.125	0.23	6	12	122.74	10.23	47.75	6	9	3.96	59.18	28.88	$29.46	$18.56	9.09	306.5	275.9
4	24.125	0.23	6	12	122.74	10.23	47.75	6	11	4.84	71.24	31.88	$32.52	$18.56	9.29	313.1	281.8
4	24.125	0.23	6	12	122.74	10.23	47.75	6	13	5.72	82.91	34.89	$35.59	$18.56	9.47	319.3	287.3

White Text - inadequate temperature and shrinkage steel
Italic Text - inadequate structural capacity
Highlighted Row - good design – valid for use

1 in. = 25.4 mm
1 ft = 0.3048 m
1 kip = 4.448 kN

Table B-1 (continued). Barrier End Section Strength and Cost Calculations for All Configurations

Top Width (in)	Base Width (in)	Concrete Volume (yd^3 / ft)	Stirrups					Longitudinal Steel				Weight of Steel (lb / ft)	Cost of Steel ($ / ft)	Cost of Concrete ($ / ft)	Yield Line Calculations		
			Bar #	Spacing (in)	Length (in)	Length / ft (ft / ft)	M_C (k-ft / ft)	Bar #	Quantity	A_s (in^2)	M_w (k-ft / ft)				L_{CR} (ft)	ΦR_w (kips)	ΦR_w (kips)
4	24.125	0.23	6	18	122.74	6.82	32.44	3	5	0.55	8.06	12.12	$12.36	$18.56	8.24	188.8	***169.9***
4	24.125	0.23	6	18	122.74	6.82	32.44	3	7	0.77	12.03	12.87	$13.13	$18.56	8.36	191.4	***172.2***
4	24.125	0.23	6	18	122.74	6.82	32.44	3	9	0.99	15.94	13.63	$13.90	$18.56	8.47	193.9	***174.5***
4	24.125	0.23	6	18	122.74	6.82	32.44	3	11	1.21	19.82	14.38	$14.67	$18.56	8.57	196.3	***176.7***
4	24.125	0.23	6	18	122.74	6.82	32.44	3	13	1.43	23.65	15.13	$15.43	$18.56	8.67	198.7	***178.8***
4	24.125	0.23	6	18	122.74	6.82	32.44	4	5	1.00	14.53	13.58	$13.85	$18.56	8.43	193.0	***173.7***
4	24.125	0.23	6	18	122.74	6.82	32.44	4	7	1.40	21.59	14.92	$15.22	$18.56	8.62	197.4	***177.7***
4	24.125	0.23	6	18	122.74	6.82	32.44	4	9	1.80	28.47	16.25	$16.58	$18.56	8.80	201.5	***181.4***
4	24.125	0.23	6	18	122.74	6.82	32.44	4	11	2.20	35.24	17.59	$17.94	$18.56	8.97	205.5	***184.9***
4	24.125	0.23	6	18	122.74	6.82	32.44	4	13	2.60	41.82	18.93	$19.30	$18.56	9.13	209.2	***188.2***
4	24.125	0.23	6	18	122.74	6.82	32.44	5	5	1.55	22.26	15.46	$15.77	$18.56	8.64	197.8	***178.0***
4	24.125	0.23	6	18	122.74	6.82	32.44	5	7	2.17	32.88	17.54	$17.89	$18.56	8.91	204.1	***183.7***
4	24.125	0.23	6	18	122.74	6.82	32.44	5	9	2.79	43.15	19.63	$20.02	$18.56	9.16	209.9	***188.9***
4	24.125	0.23	6	18	122.74	6.82	32.44	5	11	3.41	53.00	21.71	$22.15	$18.56	9.40	215.2	***193.7***
4	24.125	0.23	6	18	122.74	6.82	32.44	5	13	4.03	62.00	23.80	$24.28	$18.56	9.60	219.8	***197.8***
4	24.125	0.23	6	18	122.74	6.82	32.44	6	5	2.20	31.21	17.75	$18.11	$18.56	8.87	203.2	***182.8***
4	24.125	0.23	6	18	122.74	6.82	32.44	6	7	3.08	45.74	20.76	$21.17	$18.56	9.23	211.3	***190.2***
4	24.125	0.23	6	18	122.74	6.82	32.44	6	9	3.96	59.18	23.76	$24.24	$18.56	9.54	218.4	***196.5***
4	24.125	0.23	6	18	122.74	6.82	32.44	6	11	4.84	71.24	26.76	$27.30	$18.56	9.80	224.4	***202.0***
4	24.125	0.23	6	18	122.74	6.82	32.44	6	13	5.72	82.91	29.77	$30.36	$18.56	10.04	230.0	***207.0***
4	24.125	0.23	6	24	122.74	5.11	24.58	3	5	0.55	8.06	9.56	$9.75	$18.56	8.32	144.3	***129.9***
4	24.125	0.23	6	24	122.74	5.11	24.58	3	7	0.77	12.03	10.31	$10.52	$18.56	8.46	146.9	***132.2***
4	24.125	0.23	6	24	122.74	5.11	24.58	3	9	0.99	15.94	11.07	$11.29	$18.56	8.60	149.3	***134.4***
4	24.125	0.23	6	24	122.74	5.11	24.58	3	11	1.21	19.82	11.82	$12.05	$18.56	8.74	151.7	***136.5***
4	24.125	0.23	6	24	122.74	5.11	24.58	3	13	1.43	23.65	12.57	$12.82	$18.56	8.87	153.9	***138.5***
4	24.125	0.23	6	24	122.74	5.11	24.58	4	5	1.00	14.53	11.02	$11.24	$18.56	8.55	148.4	***133.6***
4	24.125	0.23	6	24	122.74	5.11	24.58	4	7	1.40	21.59	12.36	$12.60	$18.56	8.80	152.7	***137.5***
4	24.125	0.23	6	24	122.74	5.11	24.58	4	9	1.80	28.47	13.69	$13.97	$18.56	9.03	156.7	***141.0***
4	24.125	0.23	6	24	122.74	5.11	24.58	4	11	2.20	35.24	15.03	$15.33	$18.56	9.24	160.4	***144.4***
4	24.125	0.23	6	24	122.74	5.11	24.58	4	13	2.60	41.82	16.37	$16.69	$18.56	9.45	163.9	***147.5***
4	24.125	0.23	6	24	122.74	5.11	24.58	5	5	1.55	22.26	12.90	$13.15	$18.56	8.82	153.1	***137.8***
4	24.125	0.23	6	24	122.74	5.11	24.58	5	7	2.17	32.88	14.98	$15.28	$18.56	9.17	159.1	***143.2***
4	24.125	0.23	6	24	122.74	5.11	24.58	5	9	2.79	43.15	17.07	$17.41	$18.56	9.49	164.6	***148.1***
4	24.125	0.23	6	24	122.74	5.11	24.58	5	11	3.41	53.00	19.15	$19.54	$18.56	9.77	169.6	***152.6***
4	24.125	0.23	6	24	122.74	5.11	24.58	5	13	4.03	62.00	21.24	$21.67	$18.56	10.02	173.9	***156.5***
4	24.125	0.23	6	24	122.74	5.11	24.58	6	5	2.20	31.21	15.19	$15.50	$18.56	9.12	158.2	***142.4***
4	24.125	0.23	6	24	122.74	5.11	24.58	6	7	3.08	45.74	18.20	$18.56	$18.56	9.56	165.9	***149.3***
4	24.125	0.23	6	24	122.74	5.11	24.58	6	9	3.96	59.18	21.20	$21.62	$18.56	9.94	172.5	***155.3***
4	24.125	0.23	6	24	122.74	5.11	24.58	6	11	4.84	71.24	24.20	$24.69	$18.56	10.27	178.1	***160.3***
4	24.125	0.23	6	24	122.74	5.11	24.58	6	13	5.72	82.91	27.21	$27.75	$18.56	10.56	183.3	***165.0***

White Text - inadequate temperature and shrinkage steel
Italic Text - inadequate structural capacity
Highlighted Row - good design – valid for use

1 in. = 25.4 mm
1 ft = 0.3048 m
1 kip = 4.448 kN

Table B-1 (continued). Barrier End Section Strength and Cost Calculations for All Configurations

Top Width (in)	Base Width (in)	Concrete Volume (yd^3 / ft)	Stirrups					Longitudinal Steel				Weight of Steel (lb / ft)	Cost of Steel ($ / ft)	Cost of Concrete ($ / ft)	Yield Line Calculations		
			Bar #	Spacing (in)	Length (in)	Length / ft (ft / ft)	M_C (k-ft / ft)	Bar #	Quantity	A_s (in^2)	M_w (k-ft / ft)				L_{CR} (ft)	ΦR_w (kips)	ΦR_w (kips)
4	24.125	0.23	6	30	122.74	4.09	19.80	3	5	0.55	8.06	8.03	$8.19	$18.56	8.39	117.3	***105.5***
4	24.125	0.23	6	30	122.74	4.09	19.80	3	7	0.77	12.03	8.78	$8.95	$18.56	8.57	119.8	***107.8***
4	24.125	0.23	6	30	122.74	4.09	19.80	3	9	0.99	15.94	9.53	$9.72	$18.56	8.74	122.1	***109.9***
4	24.125	0.23	6	30	122.74	4.09	19.80	3	11	1.21	19.82	10.28	$10.49	$18.56	8.90	124.4	***112.0***
4	24.125	0.23	6	30	122.74	4.09	19.80	3	13	1.43	23.65	11.03	$11.25	$18.56	9.06	126.6	***113.9***
4	24.125	0.23	6	30	122.74	4.09	19.80	4	5	1.00	14.53	9.49	$9.67	$18.56	8.68	121.3	***109.2***
4	24.125	0.23	6	30	122.74	4.09	19.80	4	7	1.40	21.59	10.82	$11.04	$18.56	8.98	125.4	***112.9***
4	24.125	0.23	6	30	122.74	4.09	19.80	4	9	1.80	28.47	12.16	$12.40	$18.56	9.25	129.3	***116.3***
4	24.125	0.23	6	30	122.74	4.09	19.80	4	11	2.20	35.24	13.49	$13.76	$18.56	9.50	132.8	***119.5***
4	24.125	0.23	6	30	122.74	4.09	19.80	4	13	2.60	41.82	14.83	$15.13	$18.56	9.74	136.1	***122.5***
4	24.125	0.23	6	30	122.74	4.09	19.80	5	5	1.55	22.26	11.36	$11.59	$18.56	9.00	125.8	***113.2***
4	24.125	0.23	6	30	122.74	4.09	19.80	5	7	2.17	32.88	13.45	$13.72	$18.56	9.42	131.6	***118.4***
4	24.125	0.23	6	30	122.74	4.09	19.80	5	9	2.79	43.15	15.53	$15.84	$18.56	9.79	136.8	***123.1***
4	24.125	0.23	6	30	122.74	4.09	19.80	5	11	3.41	53.00	17.62	$17.97	$18.56	10.12	141.5	***127.3***
4	24.125	0.23	6	30	122.74	4.09	19.80	5	13	4.03	62.00	19.70	$20.10	$18.56	10.41	145.5	***131.0***
4	24.125	0.23	6	30	122.74	4.09	19.80	6	5	2.20	31.21	13.66	$13.93	$18.56	9.35	130.7	***117.6***
4	24.125	0.23	6	30	122.74	4.09	19.80	6	7	3.08	45.74	16.66	$16.99	$18.56	9.88	138.1	***124.2***
4	24.125	0.23	6	30	122.74	4.09	19.80	6	9	3.96	59.18	19.66	$20.06	$18.56	10.32	144.3	***129.9***
4	24.125	0.23	6	30	122.74	4.09	19.80	6	11	4.84	71.24	22.67	$23.12	$18.56	10.70	149.5	***134.6***
4	24.125	0.23	6	30	122.74	4.09	19.80	6	13	5.72	82.91	25.67	$26.18	$18.56	11.04	154.4	***138.9***
4	24.125	0.23	6	36	122.74	3.41	16.56	3	5	0.55	8.06	7.00	$7.14	$18.56	8.46	98.9	***89.0***
4	24.125	0.23	6	36	122.74	3.41	16.56	3	7	0.77	12.03	7.75	$7.91	$18.56	8.67	101.4	***91.2***
4	24.125	0.23	6	36	122.74	3.41	16.56	3	9	0.99	15.94	8.50	$8.68	$18.56	8.87	103.7	***93.3***
4	24.125	0.23	6	36	122.74	3.41	16.56	3	11	1.21	19.82	9.26	$9.44	$18.56	9.06	105.9	***95.3***
4	24.125	0.23	6	36	122.74	3.41	16.56	3	13	1.43	23.65	10.01	$10.21	$18.56	9.24	108.0	***97.2***
4	24.125	0.23	6	36	122.74	3.41	16.56	4	5	1.00	14.53	8.46	$8.63	$18.56	8.80	102.8	***92.6***
4	24.125	0.23	6	36	122.74	3.41	16.56	4	7	1.40	21.59	9.80	$9.99	$18.56	9.14	106.9	***96.2***
4	24.125	0.23	6	36	122.74	3.41	16.56	4	9	1.80	28.47	11.13	$11.36	$18.56	9.46	110.5	***99.5***
4	24.125	0.23	6	36	122.74	3.41	16.56	4	11	2.20	35.24	12.47	$12.72	$18.56	9.75	114.0	***102.6***
4	24.125	0.23	6	36	122.74	3.41	16.56	4	13	2.60	41.82	13.80	$14.08	$18.56	10.02	117.1	***105.4***
4	24.125	0.23	6	36	122.74	3.41	16.56	5	5	1.55	22.26	10.34	$10.54	$18.56	9.18	107.2	***96.5***
4	24.125	0.23	6	36	122.74	3.41	16.56	5	7	2.17	32.88	12.42	$12.67	$18.56	9.65	112.8	***101.5***
4	24.125	0.23	6	36	122.74	3.41	16.56	5	9	2.79	43.15	14.51	$14.80	$18.56	10.08	117.8	***106.0***
4	24.125	0.23	6	36	122.74	3.41	16.56	5	11	3.41	53.00	16.59	$16.93	$18.56	10.46	122.2	***110.0***
4	24.125	0.23	6	36	122.74	3.41	16.56	5	13	4.03	62.00	18.68	$19.05	$18.56	10.79	126.1	***113.5***
4	24.125	0.23	6	36	122.74	3.41	16.56	6	5	2.20	31.21	12.63	$12.88	$18.56	9.58	111.9	***100.8***
4	24.125	0.23	6	36	122.74	3.41	16.56	6	7	3.08	45.74	15.63	$15.95	$18.56	10.18	119.0	***107.1***
4	24.125	0.23	6	36	122.74	3.41	16.56	6	9	3.96	59.18	18.64	$19.01	$18.56	10.69	124.9	***112.4***
4	24.125	0.23	6	36	122.74	3.41	16.56	6	11	4.84	71.24	21.64	$22.08	$18.56	11.11	129.8	***116.8***
4	24.125	0.23	6	36	122.74	3.41	16.56	6	13	5.72	82.91	24.65	$25.14	$18.56	11.50	134.4	***120.9***

White Text - inadequate temperature and shrinkage steel
Italic Text - inadequate structural capacity
Highlighted Row - good design – valid for use

1 in. = 25.4 mm
1 ft = 0.3048 m
1 kip = 4.448 kN

Table B-1 (continued). Barrier End Section Strength and Cost Calculations for All Configurations

Top Width (in)	Base Width (in)	Concrete Volume (yd^3 / ft)	Stirrups					Longitudinal Steel				Weight of Steel (lb / ft)	Cost of Steel ($ / ft)	Cost of Concrete ($ / ft)	Yield Line Calculations		
			Bar #	Spacing (in)	Length (in)	Length / ft (ft / ft)	M_C (k-ft / ft)	Bar #	Quantity	A_s (in^2)	M_w (k-ft / ft)				L_{CR} (ft)	ΦR_w (kips)	ΦR_w (kips)
5	25.125	0.24	3	12	112.34	9.36	13.00	3	5	0.55	8.44	5.40	$5.51	$19.50	8.61	79.0	***71.1***
5	25.125	0.24	3	12	112.34	9.36	13.00	3	7	0.77	12.62	6.15	$6.27	$19.50	8.88	81.5	***73.3***
5	25.125	0.24	3	12	112.34	9.36	13.00	3	9	0.99	16.74	6.90	$7.04	$19.50	9.13	83.8	***75.4***
5	25.125	0.24	3	12	112.34	9.36	13.00	3	11	1.21	20.79	7.66	$7.81	$19.50	9.37	86.0	***77.4***
5	25.125	0.24	3	12	112.34	9.36	13.00	3	13	1.43	24.82	8.41	$8.58	$19.50	9.60	88.1	***79.3***
5	25.125	0.24	3	12	112.34	9.36	13.00	4	5	1.00	15.24	6.86	$7.00	$19.50	9.04	83.0	***74.7***
5	25.125	0.24	3	12	112.34	9.36	13.00	4	7	1.40	22.65	8.20	$8.36	$19.50	9.48	87.0	***78.3***
5	25.125	0.24	3	12	112.34	9.36	13.00	4	9	1.80	29.88	9.53	$9.72	$19.50	9.87	90.6	***81.5***
5	25.125	0.24	3	12	112.34	9.36	13.00	4	11	2.20	37.00	10.87	$11.09	$19.50	10.23	93.9	***84.5***
5	25.125	0.24	3	12	112.34	9.36	13.00	4	13	2.60	43.94	12.20	$12.45	$19.50	10.57	97.0	***87.3***
5	25.125	0.24	3	12	112.34	9.36	13.00	5	5	1.55	23.35	8.73	$8.91	$19.50	9.52	87.3	***78.6***
5	25.125	0.24	3	12	112.34	9.36	13.00	5	7	2.17	34.53	10.82	$11.04	$19.50	10.11	92.8	***83.5***
5	25.125	0.24	3	12	112.34	9.36	13.00	5	9	2.79	45.32	12.91	$13.16	$19.50	10.63	97.6	***87.8***
5	25.125	0.24	3	12	112.34	9.36	13.00	5	11	3.41	55.74	14.99	$15.29	$19.50	11.10	101.9	***91.7***
5	25.125	0.24	3	12	112.34	9.36	13.00	5	13	4.03	65.26	17.08	$17.42	$19.50	11.50	105.6	***95.0***
5	25.125	0.24	3	12	112.34	9.36	13.00	6	5	2.20	32.74	11.03	$11.25	$19.50	10.02	91.9	***82.7***
5	25.125	0.24	3	12	112.34	9.36	13.00	6	7	3.08	48.06	14.03	$14.31	$19.50	10.76	98.7	***88.9***
5	25.125	0.24	3	12	112.34	9.36	13.00	6	9	3.96	62.29	17.04	$17.38	$19.50	11.38	104.4	***94.0***
5	25.125	0.24	3	12	112.34	9.36	13.00	6	11	4.84	75.12	20.04	$20.44	$19.50	11.90	109.2	***98.3***
5	25.125	0.24	3	12	112.34	9.36	13.00	6	13	5.72	87.59	23.05	$23.51	$19.50	12.37	113.5	***102.2***
5	25.125	0.24	3	18	112.34	6.24	8.72	3	5	0.55	8.44	4.23	$4.31	$19.50	8.88	54.6	***49.2***
5	25.125	0.24	3	18	112.34	6.24	8.72	3	7	0.77	12.62	4.98	$5.08	$19.50	9.25	57.0	***51.3***
5	25.125	0.24	3	18	112.34	6.24	8.72	3	9	0.99	16.74	5.73	$5.85	$19.50	9.60	59.1	***53.2***
5	25.125	0.24	3	18	112.34	6.24	8.72	3	11	1.21	20.79	6.48	$6.61	$19.50	9.93	61.1	***55.0***
5	25.125	0.24	3	18	112.34	6.24	8.72	3	13	1.43	24.82	7.23	$7.38	$19.50	10.23	63.0	***56.7***
5	25.125	0.24	3	18	112.34	6.24	8.72	4	5	1.00	15.24	5.69	$5.80	$19.50	9.48	58.4	***52.5***
5	25.125	0.24	3	18	112.34	6.24	8.72	4	7	1.40	22.65	7.02	$7.16	$19.50	10.07	62.0	***55.8***
5	25.125	0.24	3	18	112.34	6.24	8.72	4	9	1.80	29.88	8.36	$8.53	$19.50	10.60	65.2	***58.7***
5	25.125	0.24	3	18	112.34	6.24	8.72	4	11	2.20	37.00	9.69	$9.89	$19.50	11.07	68.2	***61.4***
5	25.125	0.24	3	18	112.34	6.24	8.72	4	13	2.60	43.94	11.03	$11.25	$19.50	11.51	70.9	***63.8***
5	25.125	0.24	3	18	112.34	6.24	8.72	5	5	1.55	23.35	7.56	$7.71	$19.50	10.12	62.3	***56.1***
5	25.125	0.24	3	18	112.34	6.24	8.72	5	7	2.17	34.53	9.65	$9.84	$19.50	10.91	67.2	***60.5***
5	25.125	0.24	3	18	112.34	6.24	8.72	5	9	2.79	45.32	11.73	$11.97	$19.50	11.60	71.4	***64.3***
5	25.125	0.24	3	18	112.34	6.24	8.72	5	11	3.41	55.74	13.82	$14.10	$19.50	12.20	75.1	***67.6***
5	25.125	0.24	3	18	112.34	6.24	8.72	5	13	4.03	65.26	15.91	$16.22	$19.50	12.72	78.3	***70.5***
5	25.125	0.24	3	18	112.34	6.24	8.72	6	5	2.20	32.74	9.86	$10.05	$19.50	10.79	66.4	***59.8***
5	25.125	0.24	3	18	112.34	6.24	8.72	6	7	3.08	48.06	12.86	$13.12	$19.50	11.76	72.4	***65.2***
5	25.125	0.24	3	18	112.34	6.24	8.72	6	9	3.96	62.29	15.86	$16.18	$19.50	12.56	77.4	***69.6***
5	25.125	0.24	3	18	112.34	6.24	8.72	6	11	4.84	75.12	18.87	$19.25	$19.50	13.23	81.4	***73.3***
5	25.125	0.24	3	18	112.34	6.24	8.72	6	13	5.72	87.59	21.87	$22.31	$19.50	13.83	85.1	***76.6***

White Text - inadequate temperature and shrinkage steel
Italic Text - inadequate structural capacity
Highlighted Row - good design – valid for use

1 in. = 25.4 mm
1 ft = 0.3048 m
1 kip = 4.448 kN

Table B-1 (continued). Barrier End Section Strength and Cost Calculations for All Configurations

Top Width (in)	Base Width (in)	Concrete Volume (yd^3 / ft)	Stirrups					Longitudinal Steel				Weight of Steel (lb / ft)	Cost of Steel ($ / ft)	Cost of Concrete ($ / ft)	Yield Line Calculations		
			Bar #	Spacing (in)	Length (in)	Length / ft (ft / ft)	M_C (k-ft / ft)	Bar #	Quantity	A_s (in^2)	M_w (k-ft / ft)				L_{CR} (ft)	ΦR_w (kips)	ΦR_w (kips)
5	25.125	0.24	3	24	112.34	4.68	6.54	3	5	0.55	8.44	3.64	$3.71	$19.50	9.13	42.2	***38.0***
5	25.125	0.24	3	24	112.34	4.68	6.54	3	7	0.77	12.62	4.39	$4.48	$19.50	9.61	44.4	***39.9***
5	25.125	0.24	3	24	112.34	4.68	6.54	3	9	0.99	16.74	5.14	$5.25	$19.50	10.04	46.4	***41.7***
5	25.125	0.24	3	24	112.34	4.68	6.54	3	11	1.21	20.79	5.90	$6.01	$19.50	10.44	48.2	***43.4***
5	25.125	0.24	3	24	112.34	4.68	6.54	3	13	1.43	24.82	6.65	$6.78	$19.50	10.82	49.9	***45.0***
5	25.125	0.24	3	24	112.34	4.68	6.54	4	5	1.00	15.24	5.10	$5.20	$19.50	9.89	45.7	***41.1***
5	25.125	0.24	3	24	112.34	4.68	6.54	4	7	1.40	22.65	6.44	$6.56	$19.50	10.62	49.0	***44.1***
5	25.125	0.24	3	24	112.34	4.68	6.54	4	9	1.80	29.88	7.77	$7.93	$19.50	11.26	52.0	***46.8***
5	25.125	0.24	3	24	112.34	4.68	6.54	4	11	2.20	37.00	9.11	$9.29	$19.50	11.84	54.7	***49.2***
5	25.125	0.24	3	24	112.34	4.68	6.54	4	13	2.60	43.94	10.44	$10.65	$19.50	12.36	57.1	***51.4***
5	25.125	0.24	3	24	112.34	4.68	6.54	5	5	1.55	23.35	6.97	$7.11	$19.50	10.68	49.3	***44.4***
5	25.125	0.24	3	24	112.34	4.68	6.54	5	7	2.17	34.53	9.06	$9.24	$19.50	11.64	53.8	***48.4***
5	25.125	0.24	3	24	112.34	4.68	6.54	5	9	2.79	45.32	11.15	$11.37	$19.50	12.46	57.5	***51.8***
5	25.125	0.24	3	24	112.34	4.68	6.54	5	11	3.41	55.74	13.23	$13.50	$19.50	13.19	60.9	***54.8***
5	25.125	0.24	3	24	112.34	4.68	6.54	5	13	4.03	65.26	15.32	$15.63	$19.50	13.80	63.7	***57.4***
5	25.125	0.24	3	24	112.34	4.68	6.54	6	5	2.20	32.74	9.27	$9.46	$19.50	11.49	53.1	***47.8***
5	25.125	0.24	3	24	112.34	4.68	6.54	6	7	3.08	48.06	12.27	$12.52	$19.50	12.66	58.5	***52.6***
5	25.125	0.24	3	24	112.34	4.68	6.54	6	9	3.96	62.29	15.28	$15.58	$19.50	13.61	62.9	***56.6***
5	25.125	0.24	3	24	112.34	4.68	6.54	6	11	4.84	75.12	18.28	$18.65	$19.50	14.40	66.5	***59.8***
5	25.125	0.24	3	24	112.34	4.68	6.54	6	13	5.72	87.59	21.29	$21.71	$19.50	15.11	69.8	***62.8***
5	25.125	0.24	3	30	112.34	3.74	5.27	3	5	0.55	8.44	3.29	$3.35	$19.50	9.37	34.8	***31.4***
5	25.125	0.24	3	30	112.34	3.74	5.27	3	7	0.77	12.62	4.04	$4.12	$19.50	9.94	36.9	***33.2***
5	25.125	0.24	3	30	112.34	3.74	5.27	3	9	0.99	16.74	4.79	$4.89	$19.50	10.44	38.8	***34.9***
5	25.125	0.24	3	30	112.34	3.74	5.27	3	11	1.21	20.79	5.54	$5.65	$19.50	10.91	40.5	***36.5***
5	25.125	0.24	3	30	112.34	3.74	5.27	3	13	1.43	24.82	6.30	$6.42	$19.50	11.34	42.1	***37.9***
5	25.125	0.24	3	30	112.34	3.74	5.27	4	5	1.00	15.24	4.75	$4.84	$19.50	10.26	38.2	***34.3***
5	25.125	0.24	3	30	112.34	3.74	5.27	4	7	1.40	22.65	6.08	$6.21	$19.50	11.11	41.3	***37.2***
5	25.125	0.24	3	30	112.34	3.74	5.27	4	9	1.80	29.88	7.42	$7.57	$19.50	11.85	44.0	***39.6***
5	25.125	0.24	3	30	112.34	3.74	5.27	4	11	2.20	37.00	8.76	$8.93	$19.50	12.51	46.5	***41.9***
5	25.125	0.24	3	30	112.34	3.74	5.27	4	13	2.60	43.94	10.09	$10.29	$19.50	13.11	48.7	***43.9***
5	25.125	0.24	3	30	112.34	3.74	5.27	5	5	1.55	23.35	6.62	$6.76	$19.50	11.18	41.6	***37.4***
5	25.125	0.24	3	30	112.34	3.74	5.27	5	7	2.17	34.53	8.71	$8.88	$19.50	12.28	45.7	***41.1***
5	25.125	0.24	3	30	112.34	3.74	5.27	5	9	2.79	45.32	10.79	$11.01	$19.50	13.22	49.2	***44.2***
5	25.125	0.24	3	30	112.34	3.74	5.27	5	11	3.41	55.74	12.88	$13.14	$19.50	14.05	52.2	***47.0***
5	25.125	0.24	3	30	112.34	3.74	5.27	5	13	4.03	65.26	14.97	$15.27	$19.50	14.75	54.8	***49.3***
5	25.125	0.24	3	30	112.34	3.74	5.27	6	5	2.20	32.74	8.92	$9.10	$19.50	12.12	45.0	***40.5***
5	25.125	0.24	3	30	112.34	3.74	5.27	6	7	3.08	48.06	11.92	$12.16	$19.50	13.45	50.0	***45.0***
5	25.125	0.24	3	30	112.34	3.74	5.27	6	9	3.96	62.29	14.93	$15.22	$19.50	14.53	54.0	***48.6***
5	25.125	0.24	3	30	112.34	3.74	5.27	6	11	4.84	75.12	17.93	$18.29	$19.50	15.42	57.3	***51.6***
5	25.125	0.24	3	30	112.34	3.74	5.27	6	13	5.72	87.59	20.93	$21.35	$19.50	16.23	60.3	***54.3***

White Text - inadequate temperature and shrinkage steel
Italic Text - inadequate structural capacity
Highlighted Row - good design – valid for use

1 in. = 25.4 mm
1 ft = 0.3048 m
1 kip = 4.448 kN

Table B-1 (continued). Barrier End Section Strength and Cost Calculations for All Configurations

Top Width (in)	Base Width (in)	Concrete Volume (yd^3 / ft)	Stirrups					Longitudinal Steel				Weight of Steel (lb / ft)	Cost of Steel ($ / ft)	Cost of Concrete ($ / ft)	Yield Line Calculations		
			Bar #	Spacing (in)	Length (in)	Length / ft (ft / ft)	M_C (k-ft / ft)	Bar #	Quantity	A_s (in^2)	M_w (k-ft / ft)				L_{CR} (ft)	ΦR_w (kips)	ΦR_w (kips)
5	25.125	0.24	3	36	112.34	3.12	4.39	3	5	0.55	8.44	3.05	$3.11	$19.50	9.61	29.8	***26.8***
5	25.125	0.24	3	36	112.34	3.12	4.39	3	7	0.77	12.62	3.81	$3.88	$19.50	10.25	31.8	***28.6***
5	25.125	0.24	3	36	112.34	3.12	4.39	3	9	0.99	16.74	4.56	$4.65	$19.50	10.83	33.5	***30.2***
5	25.125	0.24	3	36	112.34	3.12	4.39	3	11	1.21	20.79	5.31	$5.42	$19.50	11.35	35.2	***31.6***
5	25.125	0.24	3	36	112.34	3.12	4.39	3	13	1.43	24.82	6.06	$6.18	$19.50	11.84	36.7	***33.0***
5	25.125	0.24	3	36	112.34	3.12	4.39	4	5	1.00	15.24	4.51	$4.60	$19.50	10.62	32.9	***29.6***
5	25.125	0.24	3	36	112.34	3.12	4.39	4	7	1.40	22.65	5.85	$5.97	$19.50	11.58	35.9	***32.3***
5	25.125	0.24	3	36	112.34	3.12	4.39	4	9	1.80	29.88	7.19	$7.33	$19.50	12.41	38.4	***34.6***
5	25.125	0.24	3	36	112.34	3.12	4.39	4	11	2.20	37.00	8.52	$8.69	$19.50	13.15	40.7	***36.7***
5	25.125	0.24	3	36	112.34	3.12	4.39	4	13	2.60	43.94	9.86	$10.05	$19.50	13.82	42.8	***38.5***
5	25.125	0.24	3	36	112.34	3.12	4.39	5	5	1.55	23.35	6.39	$6.52	$19.50	11.66	36.1	***32.5***
5	25.125	0.24	3	36	112.34	3.12	4.39	5	7	2.17	34.53	8.47	$8.64	$19.50	12.90	40.0	***36.0***
5	25.125	0.24	3	36	112.34	3.12	4.39	5	9	2.79	45.32	10.56	$10.77	$19.50	13.94	43.2	***38.9***
5	25.125	0.24	3	36	112.34	3.12	4.39	5	11	3.41	55.74	12.65	$12.90	$19.50	14.86	46.0	***41.4***
5	25.125	0.24	3	36	112.34	3.12	4.39	5	13	4.03	65.26	14.73	$15.03	$19.50	15.64	48.4	***43.6***
5	25.125	0.24	3	36	112.34	3.12	4.39	6	5	2.20	32.74	8.68	$8.86	$19.50	12.71	39.4	***35.4***
5	25.125	0.24	3	36	112.34	3.12	4.39	6	7	3.08	48.06	11.69	$11.92	$19.50	14.19	44.0	***39.6***
5	25.125	0.24	3	36	112.34	3.12	4.39	6	9	3.96	62.29	14.69	$14.99	$19.50	15.40	47.7	***42.9***
5	25.125	0.24	3	36	112.34	3.12	4.39	6	11	4.84	75.12	17.70	$18.05	$19.50	16.39	50.8	***45.7***
5	25.125	0.24	3	36	112.34	3.12	4.39	6	13	5.72	87.59	20.70	$21.11	$19.50	17.27	53.5	***48.2***
5	25.125	0.24	4	12	113.66	9.47	23.42	3	5	0.55	8.44	8.21	$8.37	$19.50	8.35	138.0	***124.2***
5	25.125	0.24	4	12	113.66	9.47	23.42	3	7	0.77	12.62	8.96	$9.14	$19.50	8.51	140.6	***126.6***
5	25.125	0.24	4	12	113.66	9.47	23.42	3	9	0.99	16.74	9.71	$9.91	$19.50	8.66	143.2	***128.9***
5	25.125	0.24	4	12	113.66	9.47	23.42	3	11	1.21	20.79	10.46	$10.67	$19.50	8.81	145.6	***131.1***
5	25.125	0.24	4	12	113.66	9.47	23.42	3	13	1.43	24.82	11.21	$11.44	$19.50	8.95	148.0	***133.2***
5	25.125	0.24	4	12	113.66	9.47	23.42	4	5	1.00	15.24	9.67	$9.86	$19.50	8.61	142.3	***128.0***
5	25.125	0.24	4	12	113.66	9.47	23.42	4	7	1.40	22.65	11.00	$11.22	$19.50	8.87	146.7	***132.0***
5	25.125	0.24	4	12	113.66	9.47	23.42	4	9	1.80	29.88	12.34	$12.59	$19.50	9.12	150.8	***135.7***
5	25.125	0.24	4	12	113.66	9.47	23.42	4	11	2.20	37.00	13.67	$13.95	$19.50	9.36	154.6	***139.2***
5	25.125	0.24	4	12	113.66	9.47	23.42	4	13	2.60	43.94	15.01	$15.31	$19.50	9.57	158.2	***142.4***
5	25.125	0.24	4	12	113.66	9.47	23.42	5	5	1.55	23.35	11.54	$11.77	$19.50	8.90	147.1	***132.4***
5	25.125	0.24	4	12	113.66	9.47	23.42	5	7	2.17	34.53	13.63	$13.90	$19.50	9.28	153.3	***138.0***
5	25.125	0.24	4	12	113.66	9.47	23.42	5	9	2.79	45.32	15.71	$16.03	$19.50	9.62	158.9	***143.1***
5	25.125	0.24	4	12	113.66	9.47	23.42	5	11	3.41	55.74	17.80	$18.16	$19.50	9.93	164.1	***147.7***
5	25.125	0.24	4	12	113.66	9.47	23.42	5	13	4.03	65.26	19.89	$20.28	$19.50	10.19	168.5	***151.7***
5	25.125	0.24	4	12	113.66	9.47	23.42	6	5	2.20	32.74	13.84	$14.11	$19.50	9.22	152.4	***137.1***
5	25.125	0.24	4	12	113.66	9.47	23.42	6	7	3.08	48.06	16.84	$17.18	$19.50	9.70	160.3	***144.3***
5	25.125	0.24	4	12	113.66	9.47	23.42	6	9	3.96	62.29	19.84	$20.24	$19.50	10.11	167.1	***150.4***
5	25.125	0.24	4	12	113.66	9.47	23.42	6	11	4.84	75.12	22.85	$23.31	$19.50	10.46	172.9	***155.6***
5	25.125	0.24	4	12	113.66	9.47	23.42	6	13	5.72	87.59	25.85	$26.37	$19.50	10.78	178.3	***160.4***

White Text - inadequate temperature and shrinkage steel
Italic Text - inadequate structural capacity
Highlighted Row - good design – valid for use

1 in. = 25.4 mm
1 ft = 0.3048 m
1 kip = 4.448 kN

Table B-1 (continued). Barrier End Section Strength and Cost Calculations for All Configurations

Top Width (in)	Base Width (in)	Concrete Volume (yd^3 / ft)	Stirrups					Longitudinal Steel				Weight of Steel (lb / ft)	Cost of Steel ($ / ft)	Cost of Concrete ($ / ft)	Yield Line Calculations		
			Bar #	Spacing (in)	Length (in)	Length / ft (ft / ft)	M_C (k-ft / ft)	Bar #	Quantity	A_s (in^2)	M_w (k-ft / ft)				L_{CR} (ft)	ΦR_w (kips)	ΦR_w (kips)
5	25.125	0.24	4	18	113.66	6.31	15.72	3	5	0.55	8.44	6.10	$6.22	$19.50	8.51	94.4	***85.0***
5	25.125	0.24	4	18	113.66	6.31	15.72	3	7	0.77	12.62	6.85	$6.99	$19.50	8.74	97.0	***87.3***
5	25.125	0.24	4	18	113.66	6.31	15.72	3	9	0.99	16.74	7.60	$7.75	$19.50	8.95	99.4	***89.4***
5	25.125	0.24	4	18	113.66	6.31	15.72	3	11	1.21	20.79	8.35	$8.52	$19.50	9.16	101.6	***91.5***
5	25.125	0.24	4	18	113.66	6.31	15.72	3	13	1.43	24.82	9.11	$9.29	$19.50	9.35	103.8	***93.4***
5	25.125	0.24	4	18	113.66	6.31	15.72	4	5	1.00	15.24	7.56	$7.71	$19.50	8.88	98.5	***88.7***
5	25.125	0.24	4	18	113.66	6.31	15.72	4	7	1.40	22.65	8.89	$9.07	$19.50	9.25	102.7	***92.4***
5	25.125	0.24	4	18	113.66	6.31	15.72	4	9	1.80	29.88	10.23	$10.43	$19.50	9.59	106.4	***95.8***
5	25.125	0.24	4	18	113.66	6.31	15.72	4	11	2.20	37.00	11.57	$11.80	$19.50	9.91	109.9	***99.0***
5	25.125	0.24	4	18	113.66	6.31	15.72	4	13	2.60	43.94	12.90	$13.16	$19.50	10.20	113.2	***101.9***
5	25.125	0.24	4	18	113.66	6.31	15.72	5	5	1.55	23.35	9.43	$9.62	$19.50	9.28	103.0	***92.7***
5	25.125	0.24	4	18	113.66	6.31	15.72	5	7	2.17	34.53	11.52	$11.75	$19.50	9.80	108.8	***97.9***
5	25.125	0.24	4	18	113.66	6.31	15.72	5	9	2.79	45.32	13.60	$13.88	$19.50	10.26	113.8	***102.4***
5	25.125	0.24	4	18	113.66	6.31	15.72	5	11	3.41	55.74	15.69	$16.00	$19.50	10.67	118.4	***106.6***
5	25.125	0.24	4	18	113.66	6.31	15.72	5	13	4.03	65.26	17.78	$18.13	$19.50	11.02	122.3	***110.1***
5	25.125	0.24	4	18	113.66	6.31	15.72	6	5	2.20	32.74	11.73	$11.96	$19.50	9.72	107.9	***97.1***
5	25.125	0.24	4	18	113.66	6.31	15.72	6	7	3.08	48.06	14.73	$15.03	$19.50	10.37	115.1	***103.5***
5	25.125	0.24	4	18	113.66	6.31	15.72	6	9	3.96	62.29	17.74	$18.09	$19.50	10.91	121.1	***109.0***
5	25.125	0.24	4	18	113.66	6.31	15.72	6	11	4.84	75.12	20.74	$21.15	$19.50	11.37	126.2	***113.6***
5	25.125	0.24	4	18	113.66	6.31	15.72	6	13	5.72	87.59	23.74	$24.22	$19.50	11.79	130.9	***117.8***
5	25.125	0.24	4	24	113.66	4.74	11.83	3	5	0.55	8.44	5.04	$5.14	$19.50	8.66	72.3	***65.1***
5	25.125	0.24	4	24	113.66	4.74	11.83	3	7	0.77	12.62	5.80	$5.91	$19.50	8.96	74.8	***67.3***
5	25.125	0.24	4	24	113.66	4.74	11.83	3	9	0.99	16.74	6.55	$6.68	$19.50	9.23	77.1	***69.4***
5	25.125	0.24	4	24	113.66	4.74	11.83	3	11	1.21	20.79	7.30	$7.45	$19.50	9.49	79.2	***71.3***
5	25.125	0.24	4	24	113.66	4.74	11.83	3	13	1.43	24.82	8.05	$8.21	$19.50	9.73	81.3	***73.2***
5	25.125	0.24	4	24	113.66	4.74	11.83	4	5	1.00	15.24	6.50	$6.63	$19.50	9.13	76.3	***68.6***
5	25.125	0.24	4	24	113.66	4.74	11.83	4	7	1.40	22.65	7.84	$8.00	$19.50	9.60	80.2	***72.2***
5	25.125	0.24	4	24	113.66	4.74	11.83	4	9	1.80	29.88	9.18	$9.36	$19.50	10.02	83.7	***75.3***
5	25.125	0.24	4	24	113.66	4.74	11.83	4	11	2.20	37.00	10.51	$10.72	$19.50	10.41	87.0	***78.3***
5	25.125	0.24	4	24	113.66	4.74	11.83	4	13	2.60	43.94	11.85	$12.08	$19.50	10.77	89.9	***81.0***
5	25.125	0.24	4	24	113.66	4.74	11.83	5	5	1.55	23.35	8.38	$8.55	$19.50	9.64	80.5	***72.5***
5	25.125	0.24	4	24	113.66	4.74	11.83	5	7	2.17	34.53	10.46	$10.67	$19.50	10.28	85.9	***77.3***
5	25.125	0.24	4	24	113.66	4.74	11.83	5	9	2.79	45.32	12.55	$12.80	$19.50	10.84	90.5	***81.5***
5	25.125	0.24	4	24	113.66	4.74	11.83	5	11	3.41	55.74	14.64	$14.93	$19.50	11.34	94.7	***85.2***
5	25.125	0.24	4	24	113.66	4.74	11.83	5	13	4.03	65.26	16.72	$17.06	$19.50	11.76	98.3	***88.4***
5	25.125	0.24	4	24	113.66	4.74	11.83	6	5	2.20	32.74	10.67	$10.89	$19.50	10.18	85.0	***76.5***
5	25.125	0.24	4	24	113.66	4.74	11.83	6	7	3.08	48.06	13.68	$13.95	$19.50	10.97	91.6	***82.5***
5	25.125	0.24	4	24	113.66	4.74	11.83	6	9	3.96	62.29	16.68	$17.02	$19.50	11.63	97.2	***87.5***
5	25.125	0.24	4	24	113.66	4.74	11.83	6	11	4.84	75.12	19.69	$20.08	$19.50	12.18	101.8	***91.6***
5	25.125	0.24	4	24	113.66	4.74	11.83	6	13	5.72	87.59	22.69	$23.14	$19.50	12.68	106.0	***95.4***

White Text - inadequate temperature and shrinkage steel
Italic Text - inadequate structural capacity
Highlighted Row - good design – valid for use

1 in. = 25.4 mm
1 ft = 0.3048 m
1 kip = 4.448 kN

Table B-1 (continued). Barrier End Section Strength and Cost Calculations for All Configurations

Top Width (in)	Base Width (in)	Concrete Volume (yd^3 / ft)	Stirrups					Longitudinal Steel				Weight of Steel (lb / ft)	Cost of Steel ($ / ft)	Cost of Concrete ($ / ft)	Yield Line Calculations		
			Bar #	Spacing (in)	Length (in)	Length / ft (ft / ft)	M_C (k-ft / ft)	Bar #	Quantity	A_s (in^2)	M_w (k-ft / ft)				L_{CR} (ft)	ΦR_w (kips)	ΦR_w (kips)
5	25.125	0.24	4	30	113.66	3.79	9.50	3	5	0.55	8.44	4.41	$4.50	$19.50	8.81	59.1	***53.2***
5	25.125	0.24	4	30	113.66	3.79	9.50	3	7	0.77	12.62	5.16	$5.27	$19.50	9.16	61.4	***55.3***
5	25.125	0.24	4	30	113.66	3.79	9.50	3	9	0.99	16.74	5.91	$6.03	$19.50	9.49	63.6	***57.3***
5	25.125	0.24	4	30	113.66	3.79	9.50	3	11	1.21	20.79	6.67	$6.80	$19.50	9.79	65.7	***59.1***
5	25.125	0.24	4	30	113.66	3.79	9.50	3	13	1.43	24.82	7.42	$7.57	$19.50	10.08	67.6	***60.8***
5	25.125	0.24	4	30	113.66	3.79	9.50	4	5	1.00	15.24	5.87	$5.99	$19.50	9.37	62.9	***56.6***
5	25.125	0.24	4	30	113.66	3.79	9.50	4	7	1.40	22.65	7.21	$7.35	$19.50	9.93	66.6	***59.9***
5	25.125	0.24	4	30	113.66	3.79	9.50	4	9	1.80	29.88	8.54	$8.71	$19.50	10.42	69.9	***62.9***
5	25.125	0.24	4	30	113.66	3.79	9.50	4	11	2.20	37.00	9.88	$10.08	$19.50	10.88	72.9	***65.6***
5	25.125	0.24	4	30	113.66	3.79	9.50	4	13	2.60	43.94	11.21	$11.44	$19.50	11.29	75.7	***68.1***
5	25.125	0.24	4	30	113.66	3.79	9.50	5	5	1.55	23.35	7.75	$7.90	$19.50	9.98	66.9	***60.2***
5	25.125	0.24	4	30	113.66	3.79	9.50	5	7	2.17	34.53	9.83	$10.03	$19.50	10.72	71.9	***64.7***
5	25.125	0.24	4	30	113.66	3.79	9.50	5	9	2.79	45.32	11.92	$12.16	$19.50	11.37	76.2	***68.6***
5	25.125	0.24	4	30	113.66	3.79	9.50	5	11	3.41	55.74	14.00	$14.28	$19.50	11.94	80.1	***72.1***
5	25.125	0.24	4	30	113.66	3.79	9.50	5	13	4.03	65.26	16.09	$16.41	$19.50	12.44	83.4	***75.0***
5	25.125	0.24	4	30	113.66	3.79	9.50	6	5	2.20	32.74	10.04	$10.24	$19.50	10.61	71.1	***64.0***
5	25.125	0.24	4	30	113.66	3.79	9.50	6	7	3.08	48.06	13.04	$13.31	$19.50	11.52	77.3	***69.6***
5	25.125	0.24	4	30	113.66	3.79	9.50	6	9	3.96	62.29	16.05	$16.37	$19.50	12.28	82.4	***74.1***
5	25.125	0.24	4	30	113.66	3.79	9.50	6	11	4.84	75.12	19.05	$19.43	$19.50	12.91	86.6	***77.9***
5	25.125	0.24	4	30	113.66	3.79	9.50	6	13	5.72	87.59	22.06	$22.50	$19.50	13.49	90.4	***81.4***
5	25.125	0.24	4	36	113.66	3.16	7.94	3	5	0.55	8.44	3.99	$4.07	$19.50	8.95	50.2	***45.2***
5	25.125	0.24	4	36	113.66	3.16	7.94	3	7	0.77	12.62	4.74	$4.84	$19.50	9.36	52.5	***47.3***
5	25.125	0.24	4	36	113.66	3.16	7.94	3	9	0.99	16.74	5.49	$5.60	$19.50	9.74	54.6	***49.1***
5	25.125	0.24	4	36	113.66	3.16	7.94	3	11	1.21	20.79	6.24	$6.37	$19.50	10.08	56.5	***50.9***
5	25.125	0.24	4	36	113.66	3.16	7.94	3	13	1.43	24.82	7.00	$7.14	$19.50	10.41	58.4	***52.5***
5	25.125	0.24	4	36	113.66	3.16	7.94	4	5	1.00	15.24	5.45	$5.56	$19.50	9.60	53.9	***48.5***
5	25.125	0.24	4	36	113.66	3.16	7.94	4	7	1.40	22.65	6.78	$6.92	$19.50	10.24	57.4	***51.7***
5	25.125	0.24	4	36	113.66	3.16	7.94	4	9	1.80	29.88	8.12	$8.28	$19.50	10.80	60.5	***54.5***
5	25.125	0.24	4	36	113.66	3.16	7.94	4	11	2.20	37.00	9.46	$9.65	$19.50	11.31	63.4	***57.1***
5	25.125	0.24	4	36	113.66	3.16	7.94	4	13	2.60	43.94	10.79	$11.01	$19.50	11.77	66.0	***59.4***
5	25.125	0.24	4	36	113.66	3.16	7.94	5	5	1.55	23.35	7.32	$7.47	$19.50	10.29	57.7	***51.9***
5	25.125	0.24	4	36	113.66	3.16	7.94	5	7	2.17	34.53	9.41	$9.60	$19.50	11.13	62.4	***56.2***
5	25.125	0.24	4	36	113.66	3.16	7.94	5	9	2.79	45.32	11.50	$11.73	$19.50	11.86	66.5	***59.9***
5	25.125	0.24	4	36	113.66	3.16	7.94	5	11	3.41	55.74	13.58	$13.85	$19.50	12.50	70.1	***63.1***
5	25.125	0.24	4	36	113.66	3.16	7.94	5	13	4.03	65.26	15.67	$15.98	$19.50	13.05	73.2	***65.9***
5	25.125	0.24	4	36	113.66	3.16	7.94	6	5	2.20	32.74	9.62	$9.81	$19.50	11.01	61.7	***55.5***
5	25.125	0.24	4	36	113.66	3.16	7.94	6	7	3.08	48.06	12.62	$12.88	$19.50	12.04	67.5	***60.7***
5	25.125	0.24	4	36	113.66	3.16	7.94	6	9	3.96	62.29	15.63	$15.94	$19.50	12.89	72.3	***65.0***
5	25.125	0.24	4	36	113.66	3.16	7.94	6	11	4.84	75.12	18.63	$19.00	$19.50	13.59	76.2	***68.6***
5	25.125	0.24	4	36	113.66	3.16	7.94	6	13	5.72	87.59	21.63	$22.07	$19.50	14.22	79.8	***71.8***

White Text - inadequate temperature and shrinkage steel
Italic Text - inadequate structural capacity
Highlighted Row - good design – valid for use

1 in. = 25.4 mm
1 ft = 0.3048 m
1 kip = 4.448 kN

Table B-1 (continued). Barrier End Section Strength and Cost Calculations for All Configurations

Top Width (in)	Base Width (in)	Concrete Volume (yd^3 / ft)	Stirrups					Longitudinal Steel				Weight of Steel (lb / ft)	Cost of Steel ($ / ft)	Cost of Concrete ($ / ft)	Yield Line Calculations		
			Bar #	Spacing (in)	Length (in)	Length / ft (ft / ft)	M_C (k-ft / ft)	Bar #	Quantity	A_s (in^2)	M_w (k-ft / ft)				L_{CR} (ft)	ΦR_w (kips)	ΦR_w (kips)
5	25.125	0.24	5	12	114.35	9.53	35.75	3	5	0.55	8.44	11.82	$12.06	$19.50	8.23	207.7	***186.9***
5	25.125	0.24	5	12	114.35	9.53	35.75	3	7	0.77	12.62	12.57	$12.82	$19.50	8.34	210.5	***189.4***
5	25.125	0.24	5	12	114.35	9.53	35.75	3	9	0.99	16.74	13.32	$13.59	$19.50	8.44	213.1	***191.8***
5	25.125	0.24	5	12	114.35	9.53	35.75	3	11	1.21	20.79	14.08	$14.36	$19.50	8.55	215.7	***194.1***
5	25.125	0.24	5	12	114.35	9.53	35.75	3	13	1.43	24.82	14.83	$15.12	$19.50	8.64	218.2	***196.3***
5	25.125	0.24	5	12	114.35	9.53	35.75	4	5	1.00	15.24	13.28	$13.54	$19.50	8.41	212.2	***190.9***
5	25.125	0.24	5	12	114.35	9.53	35.75	4	7	1.40	22.65	14.62	$14.91	$19.50	8.59	216.8	***195.1***
5	25.125	0.24	5	12	114.35	9.53	35.75	4	9	1.80	29.88	15.95	$16.27	$19.50	8.77	221.2	***199.1***
5	25.125	0.24	5	12	114.35	9.53	35.75	4	11	2.20	37.00	17.29	$17.63	$19.50	8.93	225.4	***202.8***
5	25.125	0.24	5	12	114.35	9.53	35.75	4	13	2.60	43.94	18.62	$19.00	$19.50	9.09	229.3	***206.4***
5	25.125	0.24	5	12	114.35	9.53	35.75	5	5	1.55	23.35	15.15	$15.46	$19.50	8.61	217.3	***195.5***
5	25.125	0.24	5	12	114.35	9.53	35.75	5	7	2.17	34.53	17.24	$17.58	$19.50	8.87	223.9	***201.5***
5	25.125	0.24	5	12	114.35	9.53	35.75	5	9	2.79	45.32	19.33	$19.71	$19.50	9.12	230.1	***207.0***
5	25.125	0.24	5	12	114.35	9.53	35.75	5	11	3.41	55.74	21.41	$21.84	$19.50	9.34	235.7	***212.1***
5	25.125	0.24	5	12	114.35	9.53	35.75	5	13	4.03	65.26	23.50	$23.97	$19.50	9.54	240.7	216.6
5	25.125	0.24	5	12	114.35	9.53	35.75	6	5	2.20	32.74	17.45	$17.80	$19.50	8.83	222.9	***200.6***
5	25.125	0.24	5	12	114.35	9.53	35.75	6	7	3.08	48.06	20.45	$20.86	$19.50	9.18	231.6	***208.4***
5	25.125	0.24	5	12	114.35	9.53	35.75	6	9	3.96	62.29	23.46	$23.93	$19.50	9.48	239.1	215.2
5	25.125	0.24	5	12	114.35	9.53	35.75	6	11	4.84	75.12	26.46	$26.99	$19.50	9.73	245.6	221.1
5	25.125	0.24	5	12	114.35	9.53	35.75	6	13	5.72	87.59	29.47	$30.05	$19.50	9.97	251.7	226.5
5	25.125	0.24	5	18	114.35	6.35	24.17	3	5	0.55	8.44	8.51	$8.68	$19.50	8.34	142.2	***128.0***
5	25.125	0.24	5	18	114.35	6.35	24.17	3	7	0.77	12.62	9.26	$9.44	$19.50	8.49	144.9	***130.4***
5	25.125	0.24	5	18	114.35	6.35	24.17	3	9	0.99	16.74	10.01	$10.21	$19.50	8.64	147.4	***132.7***
5	25.125	0.24	5	18	114.35	6.35	24.17	3	11	1.21	20.79	10.76	$10.98	$19.50	8.79	149.9	***134.9***
5	25.125	0.24	5	18	114.35	6.35	24.17	3	13	1.43	24.82	11.51	$11.74	$19.50	8.92	152.2	***137.0***
5	25.125	0.24	5	18	114.35	6.35	24.17	4	5	1.00	15.24	9.97	$10.17	$19.50	8.59	146.5	***131.9***
5	25.125	0.24	5	18	114.35	6.35	24.17	4	7	1.40	22.65	11.30	$11.53	$19.50	8.85	151.0	***135.9***
5	25.125	0.24	5	18	114.35	6.35	24.17	4	9	1.80	29.88	12.64	$12.89	$19.50	9.09	155.1	***139.6***
5	25.125	0.24	5	18	114.35	6.35	24.17	4	11	2.20	37.00	13.97	$14.25	$19.50	9.32	159.0	***143.1***
5	25.125	0.24	5	18	114.35	6.35	24.17	4	13	2.60	43.94	15.31	$15.62	$19.50	9.53	162.6	***146.3***
5	25.125	0.24	5	18	114.35	6.35	24.17	5	5	1.55	23.35	11.84	$12.08	$19.50	8.87	151.4	***136.2***
5	25.125	0.24	5	18	114.35	6.35	24.17	5	7	2.17	34.53	13.93	$14.21	$19.50	9.24	157.6	***141.9***
5	25.125	0.24	5	18	114.35	6.35	24.17	5	9	2.79	45.32	16.01	$16.33	$19.50	9.57	163.3	***147.0***
5	25.125	0.24	5	18	114.35	6.35	24.17	5	11	3.41	55.74	18.10	$18.46	$19.50	9.87	168.5	***151.6***
5	25.125	0.24	5	18	114.35	6.35	24.17	5	13	4.03	65.26	20.19	$20.59	$19.50	10.14	172.9	***155.7***
5	25.125	0.24	5	18	114.35	6.35	24.17	6	5	2.20	32.74	14.14	$14.42	$19.50	9.18	156.7	***141.0***
5	25.125	0.24	5	18	114.35	6.35	24.17	6	7	3.08	48.06	17.14	$17.48	$19.50	9.65	164.7	***148.2***
5	25.125	0.24	5	18	114.35	6.35	24.17	6	9	3.96	62.29	20.14	$20.55	$19.50	10.06	171.6	***154.4***
5	25.125	0.24	5	18	114.35	6.35	24.17	6	11	4.84	75.12	23.15	$23.61	$19.50	10.40	177.4	***159.7***
5	25.125	0.24	5	18	114.35	6.35	24.17	6	13	5.72	87.59	26.15	$26.68	$19.50	10.72	182.8	***164.5***

White Text - inadequate temperature and shrinkage steel
Italic Text - inadequate structural capacity
Highlighted Row - good design – valid for use

1 in. = 25.4 mm
1 ft = 0.3048 m
1 kip = 4.448 kN

Table B-1 (continued). Barrier End Section Strength and Cost Calculations for All Configurations

Top Width (in)	Base Width (in)	Concrete Volume (yd^3 / ft)	Stirrups					Longitudinal Steel				Weight of Steel (lb / ft)	Cost of Steel ($ / ft)	Cost of Concrete ($ / ft)	Yield Line Calculations		
			Bar #	Spacing (in)	Length (in)	Length / ft (ft / ft)	M_C (k-ft / ft)	Bar #	Quantity	A_s (in^2)	M_w (k-ft / ft)				L_{CR} (ft)	ΦR_w (kips)	ΦR_w (kips)
5	25.125	0.24	5	24	114.35	4.76	18.25	3	5	0.55	8.44	6.85	$6.99	$19.50	8.44	108.7	***97.9***
5	25.125	0.24	5	24	114.35	4.76	18.25	3	7	0.77	12.62	7.60	$7.75	$19.50	8.64	111.3	***100.2***
5	25.125	0.24	5	24	114.35	4.76	18.25	3	9	0.99	16.74	8.35	$8.52	$19.50	8.83	113.8	***102.4***
5	25.125	0.24	5	24	114.35	4.76	18.25	3	11	1.21	20.79	9.11	$9.29	$19.50	9.01	116.1	***104.5***
5	25.125	0.24	5	24	114.35	4.76	18.25	3	13	1.43	24.82	9.86	$10.05	$19.50	9.19	118.4	***106.5***
5	25.125	0.24	5	24	114.35	4.76	18.25	4	5	1.00	15.24	8.31	$8.48	$19.50	8.76	112.9	***101.6***
5	25.125	0.24	5	24	114.35	4.76	18.25	4	7	1.40	22.65	9.65	$9.84	$19.50	9.10	117.2	***105.5***
5	25.125	0.24	5	24	114.35	4.76	18.25	4	9	1.80	29.88	10.98	$11.20	$19.50	9.40	121.1	***109.0***
5	25.125	0.24	5	24	114.35	4.76	18.25	4	11	2.20	37.00	12.32	$12.56	$19.50	9.68	124.7	***112.2***
5	25.125	0.24	5	24	114.35	4.76	18.25	4	13	2.60	43.94	13.65	$13.93	$19.50	9.94	128.1	***115.3***
5	25.125	0.24	5	24	114.35	4.76	18.25	5	5	1.55	23.35	10.18	$10.39	$19.50	9.13	117.6	***105.8***
5	25.125	0.24	5	24	114.35	4.76	18.25	5	7	2.17	34.53	12.27	$12.52	$19.50	9.58	123.5	***111.1***
5	25.125	0.24	5	24	114.35	4.76	18.25	5	9	2.79	45.32	14.36	$14.64	$19.50	9.99	128.8	***115.9***
5	25.125	0.24	5	24	114.35	4.76	18.25	5	11	3.41	55.74	16.44	$16.77	$19.50	10.37	133.5	***120.2***
5	25.125	0.24	5	24	114.35	4.76	18.25	5	13	4.03	65.26	18.53	$18.90	$19.50	10.69	137.7	***123.9***
5	25.125	0.24	5	24	114.35	4.76	18.25	6	5	2.20	32.74	12.48	$12.73	$19.50	9.51	122.6	***110.3***
5	25.125	0.24	5	24	114.35	4.76	18.25	6	7	3.08	48.06	15.48	$15.79	$19.50	10.09	130.0	***117.0***
5	25.125	0.24	5	24	114.35	4.76	18.25	6	9	3.96	62.29	18.49	$18.86	$19.50	10.59	136.4	***122.8***
5	25.125	0.24	5	24	114.35	4.76	18.25	6	11	4.84	75.12	21.49	$21.92	$19.50	11.00	141.7	***127.6***
5	25.125	0.24	5	24	114.35	4.76	18.25	6	13	5.72	87.59	24.50	$24.99	$19.50	11.38	146.7	***132.0***
5	25.125	0.24	5	30	114.35	3.81	14.67	3	5	0.55	8.44	5.86	$5.97	$19.50	8.54	88.4	***79.6***
5	25.125	0.24	5	30	114.35	3.81	14.67	3	7	0.77	12.62	6.61	$6.74	$19.50	8.79	91.0	***81.9***
5	25.125	0.24	5	30	114.35	3.81	14.67	3	9	0.99	16.74	7.36	$7.51	$19.50	9.02	93.3	***84.0***
5	25.125	0.24	5	30	114.35	3.81	14.67	3	11	1.21	20.79	8.11	$8.27	$19.50	9.23	95.6	***86.0***
5	25.125	0.24	5	30	114.35	3.81	14.67	3	13	1.43	24.82	8.86	$9.04	$19.50	9.44	97.7	***88.0***
5	25.125	0.24	5	30	114.35	3.81	14.67	4	5	1.00	15.24	7.32	$7.46	$19.50	8.93	92.5	***83.2***
5	25.125	0.24	5	30	114.35	3.81	14.67	4	7	1.40	22.65	8.65	$8.82	$19.50	9.33	96.6	***86.9***
5	25.125	0.24	5	30	114.35	3.81	14.67	4	9	1.80	29.88	9.99	$10.19	$19.50	9.69	100.3	***90.3***
5	25.125	0.24	5	30	114.35	3.81	14.67	4	11	2.20	37.00	11.32	$11.55	$19.50	10.02	103.7	***93.4***
5	25.125	0.24	5	30	114.35	3.81	14.67	4	13	2.60	43.94	12.66	$12.91	$19.50	10.33	106.9	***96.2***
5	25.125	0.24	5	30	114.35	3.81	14.67	5	5	1.55	23.35	9.19	$9.37	$19.50	9.36	97.0	***87.3***
5	25.125	0.24	5	30	114.35	3.81	14.67	5	7	2.17	34.53	11.28	$11.50	$19.50	9.91	102.6	***92.3***
5	25.125	0.24	5	30	114.35	3.81	14.67	5	9	2.79	45.32	13.36	$13.63	$19.50	10.39	107.5	***96.8***
5	25.125	0.24	5	30	114.35	3.81	14.67	5	11	3.41	55.74	15.45	$15.76	$19.50	10.82	112.0	***100.8***
5	25.125	0.24	5	30	114.35	3.81	14.67	5	13	4.03	65.26	17.53	$17.89	$19.50	11.19	115.9	***104.3***
5	25.125	0.24	5	30	114.35	3.81	14.67	6	5	2.20	32.74	11.49	$11.72	$19.50	9.82	101.7	***91.5***
5	25.125	0.24	5	30	114.35	3.81	14.67	6	7	3.08	48.06	14.49	$14.78	$19.50	10.50	108.7	***97.9***
5	25.125	0.24	5	30	114.35	3.81	14.67	6	9	3.96	62.29	17.49	$17.84	$19.50	11.08	114.7	***103.2***
5	25.125	0.24	5	30	114.35	3.81	14.67	6	11	4.84	75.12	20.50	$20.91	$19.50	11.56	119.7	***107.7***
5	25.125	0.24	5	30	114.35	3.81	14.67	6	13	5.72	87.59	23.50	$23.97	$19.50	12.00	124.2	***111.8***

White Text - inadequate temperature and shrinkage steel
Italic Text - inadequate structural capacity
Highlighted Row - good design – valid for use

1 in. = 25.4 mm
1 ft = 0.3048 m
1 kip = 4.448 kN

Table B-1 (continued). Barrier End Section Strength and Cost Calculations for All Configurations

Top Width (in)	Base Width (in)	Concrete Volume (yd^3 / ft)	Stirrups					Longitudinal Steel				Weight of Steel (lb / ft)	Cost of Steel ($ / ft)	Cost of Concrete ($ / ft)	Yield Line Calculations		
			Bar #	Spacing (in)	Length (in)	Length / ft (ft / ft)	M_C (k-ft / ft)	Bar #	Quantity	A_s (in^2)	M_w (k-ft / ft)				L_{CR} (ft)	ΦR_w (kips)	ΦR_w (kips)
5	25.125	0.24	5	36	114.35	3.18	12.25	3	5	0.55	8.44	5.19	$5.30	$19.50	8.64	74.7	***67.2***
5	25.125	0.24	5	36	114.35	3.18	12.25	3	7	0.77	12.62	5.95	$6.06	$19.50	8.93	77.2	***69.5***
5	25.125	0.24	5	36	114.35	3.18	12.25	3	9	0.99	16.74	6.70	$6.83	$19.50	9.19	79.5	***71.5***
5	25.125	0.24	5	36	114.35	3.18	12.25	3	11	1.21	20.79	7.45	$7.60	$19.50	9.44	81.7	***73.5***
5	25.125	0.24	5	36	114.35	3.18	12.25	3	13	1.43	24.82	8.20	$8.37	$19.50	9.68	83.7	***75.3***
5	25.125	0.24	5	36	114.35	3.18	12.25	4	5	1.00	15.24	6.65	$6.79	$19.50	9.10	78.7	***70.8***
5	25.125	0.24	5	36	114.35	3.18	12.25	4	7	1.40	22.65	7.99	$8.15	$19.50	9.55	82.6	***74.3***
5	25.125	0.24	5	36	114.35	3.18	12.25	4	9	1.80	29.88	9.33	$9.51	$19.50	9.97	86.2	***77.6***
5	25.125	0.24	5	36	114.35	3.18	12.25	4	11	2.20	37.00	10.66	$10.87	$19.50	10.34	89.4	***80.5***
5	25.125	0.24	5	36	114.35	3.18	12.25	4	13	2.60	43.94	12.00	$12.24	$19.50	10.69	92.5	***83.2***
5	25.125	0.24	5	36	114.35	3.18	12.25	5	5	1.55	23.35	8.53	$8.70	$19.50	9.59	83.0	***74.7***
5	25.125	0.24	5	36	114.35	3.18	12.25	5	7	2.17	34.53	10.61	$10.83	$19.50	10.22	88.3	***79.5***
5	25.125	0.24	5	36	114.35	3.18	12.25	5	9	2.79	45.32	12.70	$12.95	$19.50	10.76	93.0	***83.7***
5	25.125	0.24	5	36	114.35	3.18	12.25	5	11	3.41	55.74	14.79	$15.08	$19.50	11.25	97.3	***87.5***
5	25.125	0.24	5	36	114.35	3.18	12.25	5	13	4.03	65.26	16.87	$17.21	$19.50	11.67	100.9	***90.8***
5	25.125	0.24	5	36	114.35	3.18	12.25	6	5	2.20	32.74	10.82	$11.04	$19.50	10.12	87.5	***78.8***
5	25.125	0.24	5	36	114.35	3.18	12.25	6	7	3.08	48.06	13.83	$14.10	$19.50	10.89	94.2	***84.8***
5	25.125	0.24	5	36	114.35	3.18	12.25	6	9	3.96	62.29	16.83	$17.17	$19.50	11.54	99.8	***89.8***
5	25.125	0.24	5	36	114.35	3.18	12.25	6	11	4.84	75.12	19.84	$20.23	$19.50	12.08	104.4	***94.0***
5	25.125	0.24	5	36	114.35	3.18	12.25	6	13	5.72	87.59	22.84	$23.30	$19.50	12.57	108.7	***97.8***
5	25.125	0.24	6	12	128.99	10.75	49.92	3	5	0.55	8.44	18.03	$18.39	$19.50	8.17	287.7	259.0
5	25.125	0.24	6	12	128.99	10.75	49.92	3	7	0.77	12.62	18.78	$19.15	$19.50	8.25	290.6	261.5
5	25.125	0.24	6	12	128.99	10.75	49.92	3	9	0.99	16.74	19.53	$19.92	$19.50	8.32	293.3	263.9
5	25.125	0.24	6	12	128.99	10.75	49.92	3	11	1.21	20.79	20.28	$20.69	$19.50	8.40	295.9	266.3
5	25.125	0.24	6	12	128.99	10.75	49.92	3	13	1.43	24.82	21.03	$21.45	$19.50	8.47	298.5	268.6
5	25.125	0.24	6	12	128.99	10.75	49.92	4	5	1.00	15.24	19.49	$19.87	$19.50	8.30	292.3	263.1
5	25.125	0.24	6	12	128.99	10.75	49.92	4	7	1.40	22.65	20.82	$21.24	$19.50	8.43	297.1	267.4
5	25.125	0.24	6	12	128.99	10.75	49.92	4	9	1.80	29.88	22.16	$22.60	$19.50	8.56	301.7	271.5
5	25.125	0.24	6	12	128.99	10.75	49.92	4	11	2.20	37.00	23.49	$23.96	$19.50	8.69	306.0	275.4
5	25.125	0.24	6	12	128.99	10.75	49.92	4	13	2.60	43.94	24.83	$25.33	$19.50	8.80	310.2	279.2
5	25.125	0.24	6	12	128.99	10.75	49.92	5	5	1.55	23.35	21.36	$21.79	$19.50	8.44	297.6	267.8
5	25.125	0.24	6	12	128.99	10.75	49.92	5	7	2.17	34.53	23.45	$23.92	$19.50	8.64	304.5	274.1
5	25.125	0.24	6	12	128.99	10.75	49.92	5	9	2.79	45.32	25.53	$26.04	$19.50	8.83	311.0	279.9
5	25.125	0.24	6	12	128.99	10.75	49.92	5	11	3.41	55.74	27.62	$28.17	$19.50	9.00	317.0	285.3
5	25.125	0.24	6	12	128.99	10.75	49.92	5	13	4.03	65.26	29.70	$30.30	$19.50	9.15	322.3	290.1
5	25.125	0.24	6	12	128.99	10.75	49.92	6	5	2.20	32.74	23.66	$24.13	$19.50	8.61	303.4	273.1
5	25.125	0.24	6	12	128.99	10.75	49.92	6	7	3.08	48.06	26.66	$27.19	$19.50	8.87	312.6	281.3
5	25.125	0.24	6	12	128.99	10.75	49.92	6	9	3.96	62.29	29.66	$30.26	$19.50	9.10	320.7	288.6
5	25.125	0.24	6	12	128.99	10.75	49.92	6	11	4.84	75.12	32.67	$33.32	$19.50	9.30	327.7	294.9
5	25.125	0.24	6	12	128.99	10.75	49.92	6	13	5.72	87.59	35.67	$36.38	$19.50	9.49	334.2	300.8

White Text - inadequate temperature and shrinkage steel
Italic Text - inadequate structural capacity
Highlighted Row - good design – valid for use

1 in. = 25.4 mm
1 ft = 0.3048 m
1 kip = 4.448 kN

Table B-1 (continued). Barrier End Section Strength and Cost Calculations for All Configurations

Top Width (in)	Base Width (in)	Concrete Volume (yd^3 / ft)	Stirrups					Longitudinal Steel				Weight of Steel (lb / ft)	Cost of Steel ($ / ft)	Cost of Concrete ($ / ft)	Yield Line Calculations		
			Bar #	Spacing (in)	Length (in)	Length / ft (ft / ft)	M_C (k-ft / ft)	Bar #	Quantity	A_s (in^2)	M_w (k-ft / ft)				L_{CR} (ft)	ΦR_w (kips)	ΦR_w (kips)
5	25.125	0.24	6	18	128.99	7.17	33.94	3	5	0.55	8.44	12.64	$12.90	$19.50	8.24	197.5	***177.7***
5	25.125	0.24	6	18	128.99	7.17	33.94	3	7	0.77	12.62	13.40	$13.66	$19.50	8.36	200.2	***180.2***
5	25.125	0.24	6	18	128.99	7.17	33.94	3	9	0.99	16.74	14.15	$14.43	$19.50	8.47	202.9	***182.6***
5	25.125	0.24	6	18	128.99	7.17	33.94	3	11	1.21	20.79	14.90	$15.20	$19.50	8.57	205.4	***184.9***
5	25.125	0.24	6	18	128.99	7.17	33.94	3	13	1.43	24.82	15.65	$15.96	$19.50	8.68	207.9	***187.1***
5	25.125	0.24	6	18	128.99	7.17	33.94	4	5	1.00	15.24	14.10	$14.39	$19.50	8.43	201.9	***181.7***
5	25.125	0.24	6	18	128.99	7.17	33.94	4	7	1.40	22.65	15.44	$15.75	$19.50	8.62	206.6	***185.9***
5	25.125	0.24	6	18	128.99	7.17	33.94	4	9	1.80	29.88	16.78	$17.11	$19.50	8.80	210.9	***189.8***
5	25.125	0.24	6	18	128.99	7.17	33.94	4	11	2.20	37.00	18.11	$18.47	$19.50	8.97	215.0	***193.5***
5	25.125	0.24	6	18	128.99	7.17	33.94	4	13	2.60	43.94	19.45	$19.84	$19.50	9.14	218.9	***197.0***
5	25.125	0.24	6	18	128.99	7.17	33.94	5	5	1.55	23.35	15.98	$16.30	$19.50	8.64	207.0	***186.3***
5	25.125	0.24	6	18	128.99	7.17	33.94	5	7	2.17	34.53	18.06	$18.43	$19.50	8.92	213.6	***192.3***
5	25.125	0.24	6	18	128.99	7.17	33.94	5	9	2.79	45.32	20.15	$20.55	$19.50	9.17	219.7	***197.7***
5	25.125	0.24	6	18	128.99	7.17	33.94	5	11	3.41	55.74	22.24	$22.68	$19.50	9.40	225.3	***202.8***
5	25.125	0.24	6	18	128.99	7.17	33.94	5	13	4.03	65.26	24.32	$24.81	$19.50	9.61	230.2	***207.2***
5	25.125	0.24	6	18	128.99	7.17	33.94	6	5	2.20	32.74	18.27	$18.64	$19.50	8.87	212.6	***191.3***
5	25.125	0.24	6	18	128.99	7.17	33.94	6	7	3.08	48.06	21.28	$21.70	$19.50	9.23	221.2	***199.1***
5	25.125	0.24	6	18	128.99	7.17	33.94	6	9	3.96	62.29	24.28	$24.77	$19.50	9.54	228.7	***205.8***
5	25.125	0.24	6	18	128.99	7.17	33.94	6	11	4.84	75.12	27.29	$27.83	$19.50	9.81	235.1	***211.6***
5	25.125	0.24	6	18	128.99	7.17	33.94	6	13	5.72	87.59	30.29	$30.90	$19.50	10.06	241.0	216.9
5	25.125	0.24	6	24	128.99	5.37	25.71	3	5	0.55	8.44	9.95	$10.15	$19.50	8.32	150.9	***135.8***
5	25.125	0.24	6	24	128.99	5.37	25.71	3	7	0.77	12.62	10.70	$10.92	$19.50	8.47	153.6	***138.3***
5	25.125	0.24	6	24	128.99	5.37	25.71	3	9	0.99	16.74	11.46	$11.69	$19.50	8.61	156.2	***140.6***
5	25.125	0.24	6	24	128.99	5.37	25.71	3	11	1.21	20.79	12.21	$12.45	$19.50	8.74	158.7	***142.8***
5	25.125	0.24	6	24	128.99	5.37	25.71	3	13	1.43	24.82	12.96	$13.22	$19.50	8.87	161.0	***144.9***
5	25.125	0.24	6	24	128.99	5.37	25.71	4	5	1.00	15.24	11.41	$11.64	$19.50	8.56	155.3	***139.7***
5	25.125	0.24	6	24	128.99	5.37	25.71	4	7	1.40	22.65	12.75	$13.00	$19.50	8.80	159.8	***143.8***
5	25.125	0.24	6	24	128.99	5.37	25.71	4	9	1.80	29.88	14.08	$14.37	$19.50	9.03	163.9	***147.5***
5	25.125	0.24	6	24	128.99	5.37	25.71	4	11	2.20	37.00	15.42	$15.73	$19.50	9.25	167.8	***151.1***
5	25.125	0.24	6	24	128.99	5.37	25.71	4	13	2.60	43.94	16.76	$17.09	$19.50	9.45	171.5	***154.4***
5	25.125	0.24	6	24	128.99	5.37	25.71	5	5	1.55	23.35	13.29	$13.55	$19.50	8.83	160.2	***144.2***
5	25.125	0.24	6	24	128.99	5.37	25.71	5	7	2.17	34.53	15.37	$15.68	$19.50	9.18	166.5	***149.9***
5	25.125	0.24	6	24	128.99	5.37	25.71	5	9	2.79	45.32	17.46	$17.81	$19.50	9.49	172.2	***155.0***
5	25.125	0.24	6	24	128.99	5.37	25.71	5	11	3.41	55.74	19.55	$19.94	$19.50	9.78	177.5	***159.7***
5	25.125	0.24	6	24	128.99	5.37	25.71	5	13	4.03	65.26	21.63	$22.06	$19.50	10.03	182.0	***163.8***
5	25.125	0.24	6	24	128.99	5.37	25.71	6	5	2.20	32.74	15.58	$15.89	$19.50	9.12	165.5	***149.0***
5	25.125	0.24	6	24	128.99	5.37	25.71	6	7	3.08	48.06	18.59	$18.96	$19.50	9.57	173.6	***156.3***
5	25.125	0.24	6	24	128.99	5.37	25.71	6	9	3.96	62.29	21.59	$22.02	$19.50	9.95	180.6	***162.6***
5	25.125	0.24	6	24	128.99	5.37	25.71	6	11	4.84	75.12	24.59	$25.09	$19.50	10.28	186.6	***167.9***
5	25.125	0.24	6	24	128.99	5.37	25.71	6	13	5.72	87.59	27.60	$28.15	$19.50	10.58	192.1	***172.9***

White Text - inadequate temperature and shrinkage steel
Italic Text - inadequate structural capacity
Highlighted Row - good design – valid for use

1 in. = 25.4 mm
1 ft = 0.3048 m
1 kip = 4.448 kN

Table B-1 (continued). Barrier End Section Strength and Cost Calculations for All Configurations

Top Width (in)	Base Width (in)	Concrete Volume (yd^3 / ft)	Stirrups					Longitudinal Steel				Weight of Steel (lb / ft)	Cost of Steel ($ / ft)	Cost of Concrete ($ / ft)	Yield Line Calculations		
			Bar #	Spacing (in)	Length (in)	Length / ft (ft / ft)	M_C (k-ft / ft)	Bar #	Quantity	A_s (in^2)	M_w (k-ft / ft)				L_{CR} (ft)	ΦR_w (kips)	ΦR_w (kips)
5	25.125	0.24	6	30	128.99	4.30	20.67	3	5	0.55	8.44	8.34	$8.50	$19.50	8.39	122.4	***110.2***
5	25.125	0.24	6	30	128.99	4.30	20.67	3	7	0.77	12.62	9.09	$9.27	$19.50	8.57	125.0	***112.5***
5	25.125	0.24	6	30	128.99	4.30	20.67	3	9	0.99	16.74	9.84	$10.04	$19.50	8.74	127.6	***114.8***
5	25.125	0.24	6	30	128.99	4.30	20.67	3	11	1.21	20.79	10.59	$10.81	$19.50	8.91	129.9	***116.9***
5	25.125	0.24	6	30	128.99	4.30	20.67	3	13	1.43	24.82	11.35	$11.57	$19.50	9.06	132.2	***119.0***
5	25.125	0.24	6	30	128.99	4.30	20.67	4	5	1.00	15.24	9.80	$9.99	$19.50	8.68	126.7	***114.0***
5	25.125	0.24	6	30	128.99	4.30	20.67	4	7	1.40	22.65	11.13	$11.36	$19.50	8.98	131.0	***117.9***
5	25.125	0.24	6	30	128.99	4.30	20.67	4	9	1.80	29.88	12.47	$12.72	$19.50	9.25	135.0	***121.5***
5	25.125	0.24	6	30	128.99	4.30	20.67	4	11	2.20	37.00	13.81	$14.08	$19.50	9.51	138.8	***124.9***
5	25.125	0.24	6	30	128.99	4.30	20.67	4	13	2.60	43.94	15.14	$15.44	$19.50	9.75	142.2	***128.0***
5	25.125	0.24	6	30	128.99	4.30	20.67	5	5	1.55	23.35	11.67	$11.91	$19.50	9.01	131.4	***118.3***
5	25.125	0.24	6	30	128.99	4.30	20.67	5	7	2.17	34.53	13.76	$14.03	$19.50	9.42	137.5	***123.7***
5	25.125	0.24	6	30	128.99	4.30	20.67	5	9	2.79	45.32	15.85	$16.16	$19.50	9.80	142.9	***128.6***
5	25.125	0.24	6	30	128.99	4.30	20.67	5	11	3.41	55.74	17.93	$18.29	$19.50	10.14	147.9	***133.1***
5	25.125	0.24	6	30	128.99	4.30	20.67	5	13	4.03	65.26	20.02	$20.42	$19.50	10.43	152.2	***136.9***
5	25.125	0.24	6	30	128.99	4.30	20.67	6	5	2.20	32.74	13.97	$14.25	$19.50	9.36	136.5	***122.9***
5	25.125	0.24	6	30	128.99	4.30	20.67	6	7	3.08	48.06	16.97	$17.31	$19.50	9.89	144.2	***129.8***
5	25.125	0.24	6	30	128.99	4.30	20.67	6	9	3.96	62.29	19.98	$20.38	$19.50	10.34	150.8	***135.8***
5	25.125	0.24	6	30	128.99	4.30	20.67	6	11	4.84	75.12	22.98	$23.44	$19.50	10.72	156.4	***140.8***
5	25.125	0.24	6	30	128.99	4.30	20.67	6	13	5.72	87.59	25.98	$26.50	$19.50	11.07	161.5	***145.4***
5	25.125	0.24	6	36	128.99	3.58	17.28	3	5	0.55	8.44	7.26	$7.41	$19.50	8.46	103.2	***92.9***
5	25.125	0.24	6	36	128.99	3.58	17.28	3	7	0.77	12.62	8.01	$8.17	$19.50	8.68	105.8	***95.2***
5	25.125	0.24	6	36	128.99	3.58	17.28	3	9	0.99	16.74	8.77	$8.94	$19.50	8.88	108.3	***97.4***
5	25.125	0.24	6	36	128.99	3.58	17.28	3	11	1.21	20.79	9.52	$9.71	$19.50	9.07	110.6	***99.5***
5	25.125	0.24	6	36	128.99	3.58	17.28	3	13	1.43	24.82	10.27	$10.48	$19.50	9.25	112.8	***101.5***
5	25.125	0.24	6	36	128.99	3.58	17.28	4	5	1.00	15.24	8.72	$8.90	$19.50	8.80	107.4	***96.6***
5	25.125	0.24	6	36	128.99	3.58	17.28	4	7	1.40	22.65	10.06	$10.26	$19.50	9.15	111.6	***100.4***
5	25.125	0.24	6	36	128.99	3.58	17.28	4	9	1.80	29.88	11.39	$11.62	$19.50	9.47	115.5	***103.9***
5	25.125	0.24	6	36	128.99	3.58	17.28	4	11	2.20	37.00	12.73	$12.98	$19.50	9.76	119.0	***107.1***
5	25.125	0.24	6	36	128.99	3.58	17.28	4	13	2.60	43.94	14.07	$14.35	$19.50	10.03	122.4	***110.1***
5	25.125	0.24	6	36	128.99	3.58	17.28	5	5	1.55	23.35	10.60	$10.81	$19.50	9.18	112.0	***100.8***
5	25.125	0.24	6	36	128.99	3.58	17.28	5	7	2.17	34.53	12.68	$12.94	$19.50	9.66	117.8	***106.0***
5	25.125	0.24	6	36	128.99	3.58	17.28	5	9	2.79	45.32	14.77	$15.06	$19.50	10.09	123.0	***110.7***
5	25.125	0.24	6	36	128.99	3.58	17.28	5	11	3.41	55.74	16.85	$17.19	$19.50	10.47	127.7	***115.0***
5	25.125	0.24	6	36	128.99	3.58	17.28	5	13	4.03	65.26	18.94	$19.32	$19.50	10.81	131.8	***118.6***
5	25.125	0.24	6	36	128.99	3.58	17.28	6	5	2.20	32.74	12.89	$13.15	$19.50	9.59	116.9	***105.2***
5	25.125	0.24	6	36	128.99	3.58	17.28	6	7	3.08	48.06	15.90	$16.21	$19.50	10.19	124.3	***111.9***
5	25.125	0.24	6	36	128.99	3.58	17.28	6	9	3.96	62.29	18.90	$19.28	$19.50	10.70	130.5	***117.5***
5	25.125	0.24	6	36	128.99	3.58	17.28	6	11	4.84	75.12	21.90	$22.34	$19.50	11.13	135.8	***122.2***
5	25.125	0.24	6	36	128.99	3.58	17.28	6	13	5.72	87.59	24.91	$25.41	$19.50	11.53	140.6	***126.6***

White Text - inadequate temperature and shrinkage steel
Italic Text - inadequate structural capacity
Highlighted Row - good design – valid for use

1 in. = 25.4 mm
1 ft = 0.3048 m
1 kip = 4.448 kN

Table B-1 (continued). Barrier End Section Strength and Cost Calculations for All Configurations

Top Width (in)	Base Width (in)	Concrete Volume (yd^3 / ft)	Stirrups					Longitudinal Steel				Weight of Steel (lb / ft)	Cost of Steel ($ / ft)	Cost of Concrete ($ / ft)	Yield Line Calculations		
			Bar #	Spacing (in)	Length (in)	Length / ft (ft / ft)	M_C (k-ft / ft)	Bar #	Quantity	A_s (in^2)	M_w (k-ft / ft)				L_{CR} (ft)	ΦR_w (kips)	ΦR_w (kips)
6	26.125	0.25	3	12	114.59	9.55	13.58	3	5	0.55	8.85	5.47	$5.58	$20.44	8.61	82.5	***74.3***
6	26.125	0.25	3	12	114.59	9.55	13.58	3	7	0.77	13.21	6.22	$6.35	$20.44	8.88	85.1	***76.6***
6	26.125	0.25	3	12	114.59	9.55	13.58	3	9	0.99	17.50	6.97	$7.11	$20.44	9.13	87.6	***78.8***
6	26.125	0.25	3	12	114.59	9.55	13.58	3	11	1.21	21.76	7.73	$7.88	$20.44	9.37	89.9	***80.9***
6	26.125	0.25	3	12	114.59	9.55	13.58	3	13	1.43	26.00	8.48	$8.65	$20.44	9.60	92.1	***82.8***
6	26.125	0.25	3	12	114.59	9.55	13.58	4	5	1.00	15.94	6.93	$7.07	$20.44	9.04	86.7	***78.0***
6	26.125	0.25	3	12	114.59	9.55	13.58	4	7	1.40	23.71	8.27	$8.43	$20.44	9.48	90.9	***81.8***
6	26.125	0.25	3	12	114.59	9.55	13.58	4	9	1.80	31.29	9.60	$9.79	$20.44	9.87	94.7	***85.2***
6	26.125	0.25	3	12	114.59	9.55	13.58	4	11	2.20	38.76	10.94	$11.16	$20.44	10.24	98.2	***88.3***
6	26.125	0.25	3	12	114.59	9.55	13.58	4	13	2.60	46.06	12.27	$12.52	$20.44	10.57	101.4	***91.2***
6	26.125	0.25	3	12	114.59	9.55	13.58	5	5	1.55	24.47	8.81	$8.98	$20.44	9.52	91.3	***82.1***
6	26.125	0.25	3	12	114.59	9.55	13.58	5	7	2.17	36.18	10.89	$11.11	$20.44	10.11	97.0	***87.3***
6	26.125	0.25	3	12	114.59	9.55	13.58	5	9	2.79	47.50	12.98	$13.24	$20.44	10.64	102.0	***91.8***
6	26.125	0.25	3	12	114.59	9.55	13.58	5	11	3.41	58.47	15.06	$15.36	$20.44	11.11	106.5	***95.9***
6	26.125	0.25	3	12	114.59	9.55	13.58	5	13	4.03	68.56	17.15	$17.49	$20.44	11.52	110.4	***99.4***
6	26.125	0.25	3	12	114.59	9.55	13.58	6	5	2.20	34.29	11.10	$11.32	$20.44	10.02	96.1	***86.5***
6	26.125	0.25	3	12	114.59	9.55	13.58	6	7	3.08	50.38	14.10	$14.39	$20.44	10.77	103.2	***92.9***
6	26.125	0.25	3	12	114.59	9.55	13.58	6	9	3.96	65.38	17.11	$17.45	$20.44	11.39	109.2	***98.3***
6	26.125	0.25	3	12	114.59	9.55	13.58	6	11	4.84	79.00	20.11	$20.51	$20.44	11.92	114.3	***102.8***
6	26.125	0.25	3	12	114.59	9.55	13.58	6	13	5.72	92.24	23.12	$23.58	$20.44	12.40	118.9	***107.0***
6	26.125	0.25	3	18	114.59	6.37	9.11	3	5	0.55	8.85	4.27	$4.36	$20.44	8.88	57.1	***51.4***
6	26.125	0.25	3	18	114.59	6.37	9.11	3	7	0.77	13.21	5.03	$5.13	$20.44	9.26	59.5	***53.6***
6	26.125	0.25	3	18	114.59	6.37	9.11	3	9	0.99	17.50	5.78	$5.89	$20.44	9.61	61.8	***55.6***
6	26.125	0.25	3	18	114.59	6.37	9.11	3	11	1.21	21.76	6.53	$6.66	$20.44	9.93	63.9	***57.5***
6	26.125	0.25	3	18	114.59	6.37	9.11	3	13	1.43	26.00	7.28	$7.43	$20.44	10.24	65.8	***59.3***
6	26.125	0.25	3	18	114.59	6.37	9.11	4	5	1.00	15.94	5.73	$5.85	$20.44	9.48	61.0	***54.9***
6	26.125	0.25	3	18	114.59	6.37	9.11	4	7	1.40	23.71	7.07	$7.21	$20.44	10.07	64.8	***58.3***
6	26.125	0.25	3	18	114.59	6.37	9.11	4	9	1.80	31.29	8.41	$8.57	$20.44	10.60	68.2	***61.4***
6	26.125	0.25	3	18	114.59	6.37	9.11	4	11	2.20	38.76	9.74	$9.94	$20.44	11.08	71.3	***64.1***
6	26.125	0.25	3	18	114.59	6.37	9.11	4	13	2.60	46.06	11.08	$11.30	$20.44	11.52	74.1	***66.7***
6	26.125	0.25	3	18	114.59	6.37	9.11	5	5	1.55	24.47	7.61	$7.76	$20.44	10.13	65.1	***58.6***
6	26.125	0.25	3	18	114.59	6.37	9.11	5	7	2.17	36.18	9.69	$9.89	$20.44	10.92	70.2	***63.2***
6	26.125	0.25	3	18	114.59	6.37	9.11	5	9	2.79	47.50	11.78	$12.02	$20.44	11.61	74.6	***67.2***
6	26.125	0.25	3	18	114.59	6.37	9.11	5	11	3.41	58.47	13.87	$14.14	$20.44	12.22	78.6	***70.7***
6	26.125	0.25	3	18	114.59	6.37	9.11	5	13	4.03	68.56	15.95	$16.27	$20.44	12.74	81.9	***73.7***
6	26.125	0.25	3	18	114.59	6.37	9.11	6	5	2.20	34.29	9.90	$10.10	$20.44	10.80	69.4	***62.5***
6	26.125	0.25	3	18	114.59	6.37	9.11	6	7	3.08	50.38	12.91	$13.17	$20.44	11.77	75.7	***68.1***
6	26.125	0.25	3	18	114.59	6.37	9.11	6	9	3.96	65.38	15.91	$16.23	$20.44	12.58	80.9	***72.8***
6	26.125	0.25	3	18	114.59	6.37	9.11	6	11	4.84	79.00	18.92	$19.29	$20.44	13.25	85.2	***76.7***
6	26.125	0.25	3	18	114.59	6.37	9.11	6	13	5.72	92.24	21.92	$22.36	$20.44	13.86	89.2	***80.2***

White Text - inadequate temperature and shrinkage steel
Italic Text - inadequate structural capacity
Highlighted Row - good design – valid for use

1 in. = 25.4 mm
1 ft = 0.3048 m
1 kip = 4.448 kN

Table B-1 (continued). Barrier End Section Strength and Cost Calculations for All Configurations

Top Width (in)	Base Width (in)	Concrete Volume (yd^3 / ft)	Stirrups					Longitudinal Steel				Weight of Steel (lb / ft)	Cost of Steel ($ / ft)	Cost of Concrete ($ / ft)	Yield Line Calculations		
			Bar #	Spacing (in)	Length (in)	Length / ft (ft / ft)	M_C (k-ft / ft)	Bar #	Quantity	A_s (in^2)	M_w (k-ft / ft)				L_{CR} (ft)	ΦR_w (kips)	ΦR_w (kips)
6	26.125	0.25	3	24	114.59	4.77	6.83	3	5	0.55	8.85	3.68	$3.75	$20.44	9.14	44.1	***39.7***
6	26.125	0.25	3	24	114.59	4.77	6.83	3	7	0.77	13.21	4.43	$4.52	$20.44	9.61	46.4	***41.7***
6	26.125	0.25	3	24	114.59	4.77	6.83	3	9	0.99	17.50	5.18	$5.28	$20.44	10.05	48.5	***43.6***
6	26.125	0.25	3	24	114.59	4.77	6.83	3	11	1.21	21.76	5.93	$6.05	$20.44	10.45	50.4	***45.4***
6	26.125	0.25	3	24	114.59	4.77	6.83	3	13	1.43	26.00	6.68	$6.82	$20.44	10.82	52.2	***47.0***
6	26.125	0.25	3	24	114.59	4.77	6.83	4	5	1.00	15.94	5.14	$5.24	$20.44	9.89	47.7	***42.9***
6	26.125	0.25	3	24	114.59	4.77	6.83	4	7	1.40	23.71	6.47	$6.60	$20.44	10.62	51.2	***46.1***
6	26.125	0.25	3	24	114.59	4.77	6.83	4	9	1.80	31.29	7.81	$7.96	$20.44	11.26	54.3	***48.9***
6	26.125	0.25	3	24	114.59	4.77	6.83	4	11	2.20	38.76	9.14	$9.33	$20.44	11.84	57.1	***51.4***
6	26.125	0.25	3	24	114.59	4.77	6.83	4	13	2.60	46.06	10.48	$10.69	$20.44	12.37	59.7	***53.7***
6	26.125	0.25	3	24	114.59	4.77	6.83	5	5	1.55	24.47	7.01	$7.15	$20.44	10.69	51.6	***46.4***
6	26.125	0.25	3	24	114.59	4.77	6.83	5	7	2.17	36.18	9.10	$9.28	$20.44	11.65	56.2	***50.6***
6	26.125	0.25	3	24	114.59	4.77	6.83	5	9	2.79	47.50	11.18	$11.41	$20.44	12.47	60.2	***54.2***
6	26.125	0.25	3	24	114.59	4.77	6.83	5	11	3.41	58.47	13.27	$13.53	$20.44	13.20	63.7	***57.3***
6	26.125	0.25	3	24	114.59	4.77	6.83	5	13	4.03	68.56	15.35	$15.66	$20.44	13.83	66.7	***60.0***
6	26.125	0.25	3	24	114.59	4.77	6.83	6	5	2.20	34.29	9.31	$9.49	$20.44	11.50	55.5	***49.9***
6	26.125	0.25	3	24	114.59	4.77	6.83	6	7	3.08	50.38	12.31	$12.56	$20.44	12.67	61.1	***55.0***
6	26.125	0.25	3	24	114.59	4.77	6.83	6	9	3.96	65.38	15.31	$15.62	$20.44	13.63	65.8	***59.2***
6	26.125	0.25	3	24	114.59	4.77	6.83	6	11	4.84	79.00	18.32	$18.68	$20.44	14.43	69.6	***62.6***
6	26.125	0.25	3	24	114.59	4.77	6.83	6	13	5.72	92.24	21.32	$21.75	$20.44	15.15	73.1	***65.8***
6	26.125	0.25	3	30	114.59	3.82	5.47	3	5	0.55	8.85	3.32	$3.38	$20.44	9.39	36.2	***32.6***
6	26.125	0.25	3	30	114.59	3.82	5.47	3	7	0.77	13.21	4.07	$4.15	$20.44	9.95	38.4	***34.6***
6	26.125	0.25	3	30	114.59	3.82	5.47	3	9	0.99	17.50	4.82	$4.92	$20.44	10.46	40.4	***36.3***
6	26.125	0.25	3	30	114.59	3.82	5.47	3	11	1.21	21.76	5.57	$5.68	$20.44	10.93	42.2	***37.9***
6	26.125	0.25	3	30	114.59	3.82	5.47	3	13	1.43	26.00	6.32	$6.45	$20.44	11.36	43.8	***39.5***
6	26.125	0.25	3	30	114.59	3.82	5.47	4	5	1.00	15.94	4.78	$4.87	$20.44	10.28	39.7	***35.7***
6	26.125	0.25	3	30	114.59	3.82	5.47	4	7	1.40	23.71	6.11	$6.23	$20.44	11.13	42.9	***38.6***
6	26.125	0.25	3	30	114.59	3.82	5.47	4	9	1.80	31.29	7.45	$7.60	$20.44	11.87	45.8	***41.2***
6	26.125	0.25	3	30	114.59	3.82	5.47	4	11	2.20	38.76	8.78	$8.96	$20.44	12.54	48.4	***43.5***
6	26.125	0.25	3	30	114.59	3.82	5.47	4	13	2.60	46.06	10.12	$10.32	$20.44	13.15	50.7	***45.7***
6	26.125	0.25	3	30	114.59	3.82	5.47	5	5	1.55	24.47	6.65	$6.78	$20.44	11.21	43.2	***38.9***
6	26.125	0.25	3	30	114.59	3.82	5.47	5	7	2.17	36.18	8.74	$8.91	$20.44	12.31	47.5	***42.8***
6	26.125	0.25	3	30	114.59	3.82	5.47	5	9	2.79	47.50	10.82	$11.04	$20.44	13.26	51.2	***46.1***
6	26.125	0.25	3	30	114.59	3.82	5.47	5	11	3.41	58.47	12.91	$13.17	$20.44	14.09	54.4	***48.9***
6	26.125	0.25	3	30	114.59	3.82	5.47	5	13	4.03	68.56	15.00	$15.30	$20.44	14.80	57.1	***51.4***
6	26.125	0.25	3	30	114.59	3.82	5.47	6	5	2.20	34.29	8.95	$9.13	$20.44	12.15	46.9	***42.2***
6	26.125	0.25	3	30	114.59	3.82	5.47	6	7	3.08	50.38	11.95	$12.19	$20.44	13.49	52.0	***46.8***
6	26.125	0.25	3	30	114.59	3.82	5.47	6	9	3.96	65.38	14.95	$15.25	$20.44	14.58	56.3	***50.6***
6	26.125	0.25	3	30	114.59	3.82	5.47	6	11	4.84	79.00	17.96	$18.32	$20.44	15.49	59.8	***53.8***
6	26.125	0.25	3	30	114.59	3.82	5.47	6	13	5.72	92.24	20.96	$21.38	$20.44	16.31	62.9	***56.6***

White Text - inadequate temperature and shrinkage steel
Italic Text - inadequate structural capacity
Highlighted Row - good design – valid for use

1 in. = 25.4 mm
1 ft = 0.3048 m
1 kip = 4.448 kN

Table B-1 (continued). Barrier End Section Strength and Cost Calculations for All Configurations

Top Width (in)	Base Width (in)	Concrete Volume (yd^3 / ft)	Stirrups					Longitudinal Steel				Weight of Steel (lb / ft)	Cost of Steel ($ / ft)	Cost of Concrete ($ / ft)	Yield Line Calculations		
			Bar #	Spacing (in)	Length (in)	Length / ft (ft / ft)	M_C (k-ft / ft)	Bar #	Quantity	A_s (in^2)	M_w (k-ft / ft)				L_{CR} (ft)	ΦR_w (kips)	ΦR_w (kips)
6	26.125	0.25	3	36	114.59	3.18	4.56	3	5	0.55	8.85	3.08	$3.14	$20.44	9.62	30.9	***27.8***
6	26.125	0.25	3	36	114.59	3.18	4.56	3	7	0.77	13.21	3.83	$3.91	$20.44	10.27	33.0	***29.7***
6	26.125	0.25	3	36	114.59	3.18	4.56	3	9	0.99	17.50	4.58	$4.67	$20.44	10.84	34.9	***31.4***
6	26.125	0.25	3	36	114.59	3.18	4.56	3	11	1.21	21.76	5.33	$5.44	$20.44	11.37	36.6	***32.9***
6	26.125	0.25	3	36	114.59	3.18	4.56	3	13	1.43	26.00	6.08	$6.21	$20.44	11.86	38.1	***34.3***
6	26.125	0.25	3	36	114.59	3.18	4.56	4	5	1.00	15.94	4.54	$4.63	$20.44	10.64	34.2	***30.8***
6	26.125	0.25	3	36	114.59	3.18	4.56	4	7	1.40	23.71	5.87	$5.99	$20.44	11.60	37.3	***33.6***
6	26.125	0.25	3	36	114.59	3.18	4.56	4	9	1.80	31.29	7.21	$7.35	$20.44	12.43	40.0	***36.0***
6	26.125	0.25	3	36	114.59	3.18	4.56	4	11	2.20	38.76	8.54	$8.72	$20.44	13.18	42.4	***38.2***
6	26.125	0.25	3	36	114.59	3.18	4.56	4	13	2.60	46.06	9.88	$10.08	$20.44	13.86	44.6	***40.1***
6	26.125	0.25	3	36	114.59	3.18	4.56	5	5	1.55	24.47	6.41	$6.54	$20.44	11.69	37.6	***33.8***
6	26.125	0.25	3	36	114.59	3.18	4.56	5	7	2.17	36.18	8.50	$8.67	$20.44	12.93	41.6	***37.4***
6	26.125	0.25	3	36	114.59	3.18	4.56	5	9	2.79	47.50	10.58	$10.80	$20.44	13.99	45.0	***40.5***
6	26.125	0.25	3	36	114.59	3.18	4.56	5	11	3.41	58.47	12.67	$12.92	$20.44	14.91	47.9	***43.2***
6	26.125	0.25	3	36	114.59	3.18	4.56	5	13	4.03	68.56	14.76	$15.05	$20.44	15.70	50.5	***45.4***
6	26.125	0.25	3	36	114.59	3.18	4.56	6	5	2.20	34.29	8.71	$8.88	$20.44	12.74	41.0	***36.9***
6	26.125	0.25	3	36	114.59	3.18	4.56	6	7	3.08	50.38	11.71	$11.94	$20.44	14.24	45.8	***41.2***
6	26.125	0.25	3	36	114.59	3.18	4.56	6	9	3.96	65.38	14.71	$15.01	$20.44	15.45	49.7	***44.7***
6	26.125	0.25	3	36	114.59	3.18	4.56	6	11	4.84	79.00	17.72	$18.07	$20.44	16.46	52.9	***47.6***
6	26.125	0.25	3	36	114.59	3.18	4.56	6	13	5.72	92.24	20.72	$21.14	$20.44	17.36	55.8	***50.2***
6	26.125	0.25	4	12	115.66	9.64	24.42	3	5	0.55	8.85	8.32	$8.48	$20.44	8.35	143.9	***129.5***
6	26.125	0.25	4	12	115.66	9.64	24.42	3	7	0.77	13.21	9.07	$9.25	$20.44	8.51	146.7	***132.0***
6	26.125	0.25	4	12	115.66	9.64	24.42	3	9	0.99	17.50	9.82	$10.02	$20.44	8.66	149.3	***134.4***
6	26.125	0.25	4	12	115.66	9.64	24.42	3	11	1.21	21.76	10.57	$10.79	$20.44	8.81	151.9	***136.7***
6	26.125	0.25	4	12	115.66	9.64	24.42	3	13	1.43	26.00	11.33	$11.55	$20.44	8.95	154.3	***138.9***
6	26.125	0.25	4	12	115.66	9.64	24.42	4	5	1.00	15.94	9.78	$9.97	$20.44	8.61	148.4	***133.5***
6	26.125	0.25	4	12	115.66	9.64	24.42	4	7	1.40	23.71	11.11	$11.34	$20.44	8.88	153.0	***137.7***
6	26.125	0.25	4	12	115.66	9.64	24.42	4	9	1.80	31.29	12.45	$12.70	$20.44	9.13	157.3	***141.6***
6	26.125	0.25	4	12	115.66	9.64	24.42	4	11	2.20	38.76	13.79	$14.06	$20.44	9.36	161.3	***145.2***
6	26.125	0.25	4	12	115.66	9.64	24.42	4	13	2.60	46.06	15.12	$15.42	$20.44	9.58	165.1	***148.6***
6	26.125	0.25	4	12	115.66	9.64	24.42	5	5	1.55	24.47	11.65	$11.89	$20.44	8.90	153.5	***138.1***
6	26.125	0.25	4	12	115.66	9.64	24.42	5	7	2.17	36.18	13.74	$14.01	$20.44	9.28	160.0	***144.0***
6	26.125	0.25	4	12	115.66	9.64	24.42	5	9	2.79	47.50	15.83	$16.14	$20.44	9.62	165.9	***149.3***
6	26.125	0.25	4	12	115.66	9.64	24.42	5	11	3.41	58.47	17.91	$18.27	$20.44	9.93	171.2	***154.1***
6	26.125	0.25	4	12	115.66	9.64	24.42	5	13	4.03	68.56	20.00	$20.40	$20.44	10.21	175.9	***158.3***
6	26.125	0.25	4	12	115.66	9.64	24.42	6	5	2.20	34.29	13.95	$14.23	$20.44	9.22	159.0	***143.1***
6	26.125	0.25	4	12	115.66	9.64	24.42	6	7	3.08	50.38	16.95	$17.29	$20.44	9.71	167.3	***150.6***
6	26.125	0.25	4	12	115.66	9.64	24.42	6	9	3.96	65.38	19.96	$20.36	$20.44	10.12	174.5	***157.0***
6	26.125	0.25	4	12	115.66	9.64	24.42	6	11	4.84	79.00	22.96	$23.42	$20.44	10.48	180.6	***162.5***
6	26.125	0.25	4	12	115.66	9.64	24.42	6	13	5.72	92.24	25.96	$26.48	$20.44	10.81	186.2	***167.6***

White Text - inadequate temperature and shrinkage steel
Italic Text - inadequate structural capacity
Highlighted Row - good design – valid for use

1 in. = 25.4 mm
1 ft = 0.3048 m
1 kip = 4.448 kN

Table B-1 (continued). Barrier End Section Strength and Cost Calculations for All Configurations

Top Width (in)	Base Width (in)	Concrete Volume (yd^3 / ft)	Stirrups					Longitudinal Steel				Weight of Steel (lb / ft)	Cost of Steel ($ / ft)	Cost of Concrete ($ / ft)	Yield Line Calculations		
			Bar #	Spacing (in)	Length (in)	Length / ft (ft / ft)	M_C (k-ft / ft)	Bar #	Quantity	A_s (in^2)	M_w (k-ft / ft)				L_{CR} (ft)	ΦR_w (kips)	ΦR_w (kips)
6	26.125	0.25	4	18	115.66	6.43	16.39	3	5	0.55	8.85	6.17	$6.30	$20.44	8.51	98.4	***88.6***
6	26.125	0.25	4	18	115.66	6.43	16.39	3	7	0.77	13.21	6.92	$7.06	$20.44	8.74	101.1	***91.0***
6	26.125	0.25	4	18	115.66	6.43	16.39	3	9	0.99	17.50	7.68	$7.83	$20.44	8.96	103.6	***93.3***
6	26.125	0.25	4	18	115.66	6.43	16.39	3	11	1.21	21.76	8.43	$8.60	$20.44	9.16	106.0	***95.4***
6	26.125	0.25	4	18	115.66	6.43	16.39	3	13	1.43	26.00	9.18	$9.36	$20.44	9.36	108.3	***97.5***
6	26.125	0.25	4	18	115.66	6.43	16.39	4	5	1.00	15.94	7.63	$7.78	$20.44	8.88	102.7	***92.5***
6	26.125	0.25	4	18	115.66	6.43	16.39	4	7	1.40	23.71	8.97	$9.15	$20.44	9.25	107.1	***96.4***
6	26.125	0.25	4	18	115.66	6.43	16.39	4	9	1.80	31.29	10.30	$10.51	$20.44	9.60	111.0	***99.9***
6	26.125	0.25	4	18	115.66	6.43	16.39	4	11	2.20	38.76	11.64	$11.87	$20.44	9.92	114.7	***103.2***
6	26.125	0.25	4	18	115.66	6.43	16.39	4	13	2.60	46.06	12.98	$13.24	$20.44	10.21	118.1	***106.3***
6	26.125	0.25	4	18	115.66	6.43	16.39	5	5	1.55	24.47	9.51	$9.70	$20.44	9.29	107.5	***96.7***
6	26.125	0.25	4	18	115.66	6.43	16.39	5	7	2.17	36.18	11.59	$11.82	$20.44	9.81	113.5	***102.1***
6	26.125	0.25	4	18	115.66	6.43	16.39	5	9	2.79	47.50	13.68	$13.95	$20.44	10.27	118.8	***106.9***
6	26.125	0.25	4	18	115.66	6.43	16.39	5	11	3.41	58.47	15.77	$16.08	$20.44	10.68	123.6	***111.2***
6	26.125	0.25	4	18	115.66	6.43	16.39	5	13	4.03	68.56	17.85	$18.21	$20.44	11.04	127.7	***115.0***
6	26.125	0.25	4	18	115.66	6.43	16.39	6	5	2.20	34.29	11.80	$12.04	$20.44	9.73	112.5	***101.3***
6	26.125	0.25	4	18	115.66	6.43	16.39	6	7	3.08	50.38	14.81	$15.10	$20.44	10.38	120.1	***108.1***
6	26.125	0.25	4	18	115.66	6.43	16.39	6	9	3.96	65.38	17.81	$18.17	$20.44	10.93	126.4	***113.8***
6	26.125	0.25	4	18	115.66	6.43	16.39	6	11	4.84	79.00	20.81	$21.23	$20.44	11.40	131.8	***118.6***
6	26.125	0.25	4	18	115.66	6.43	16.39	6	13	5.72	92.24	23.82	$24.29	$20.44	11.82	136.8	***123.1***
6	26.125	0.25	4	24	115.66	4.82	12.33	3	5	0.55	8.85	5.10	$5.20	$20.44	8.67	75.4	***67.9***
6	26.125	0.25	4	24	115.66	4.82	12.33	3	7	0.77	13.21	5.85	$5.97	$20.44	8.96	78.0	***70.2***
6	26.125	0.25	4	24	115.66	4.82	12.33	3	9	0.99	17.50	6.60	$6.74	$20.44	9.23	80.4	***72.3***
6	26.125	0.25	4	24	115.66	4.82	12.33	3	11	1.21	21.76	7.36	$7.50	$20.44	9.49	82.6	***74.4***
6	26.125	0.25	4	24	115.66	4.82	12.33	3	13	1.43	26.00	8.11	$8.27	$20.44	9.74	84.8	***76.3***
6	26.125	0.25	4	24	115.66	4.82	12.33	4	5	1.00	15.94	6.56	$6.69	$20.44	9.14	79.5	***71.6***
6	26.125	0.25	4	24	115.66	4.82	12.33	4	7	1.40	23.71	7.90	$8.05	$20.44	9.61	83.6	***75.3***
6	26.125	0.25	4	24	115.66	4.82	12.33	4	9	1.80	31.29	9.23	$9.42	$20.44	10.03	87.3	***78.6***
6	26.125	0.25	4	24	115.66	4.82	12.33	4	11	2.20	38.76	10.57	$10.78	$20.44	10.42	90.7	***81.7***
6	26.125	0.25	4	24	115.66	4.82	12.33	4	13	2.60	46.06	11.90	$12.14	$20.44	10.78	93.9	***84.5***
6	26.125	0.25	4	24	115.66	4.82	12.33	5	5	1.55	24.47	8.43	$8.60	$20.44	9.65	84.0	***75.6***
6	26.125	0.25	4	24	115.66	4.82	12.33	5	7	2.17	36.18	10.52	$10.73	$20.44	10.29	89.6	***80.6***
6	26.125	0.25	4	24	115.66	4.82	12.33	5	9	2.79	47.50	12.61	$12.86	$20.44	10.85	94.5	***85.0***
6	26.125	0.25	4	24	115.66	4.82	12.33	5	11	3.41	58.47	14.69	$14.99	$20.44	11.35	98.8	***88.9***
6	26.125	0.25	4	24	115.66	4.82	12.33	5	13	4.03	68.56	16.78	$17.11	$20.44	11.79	102.6	***92.3***
6	26.125	0.25	4	24	115.66	4.82	12.33	6	5	2.20	34.29	10.73	$10.94	$20.44	10.19	88.7	***79.8***
6	26.125	0.25	4	24	115.66	4.82	12.33	6	7	3.08	50.38	13.73	$14.01	$20.44	10.99	95.6	***86.1***
6	26.125	0.25	4	24	115.66	4.82	12.33	6	9	3.96	65.38	16.74	$17.07	$20.44	11.65	101.4	***91.3***
6	26.125	0.25	4	24	115.66	4.82	12.33	6	11	4.84	79.00	19.74	$20.14	$20.44	12.21	106.3	***95.7***
6	26.125	0.25	4	24	115.66	4.82	12.33	6	13	5.72	92.24	22.75	$23.20	$20.44	12.72	110.7	***99.7***

White Text - inadequate temperature and shrinkage steel
Italic Text - inadequate structural capacity
Highlighted Row - good design – valid for use

1 in. = 25.4 mm
1 ft = 0.3048 m
1 kip = 4.448 kN

Table B-1 (continued). Barrier End Section Strength and Cost Calculations for All Configurations

Top Width (in)	Base Width (in)	Concrete Volume (yd^3 / ft)	Stirrups					Longitudinal Steel				Weight of Steel (lb / ft)	Cost of Steel ($ / ft)	Cost of Concrete ($ / ft)	Yield Line Calculations		
			Bar #	Spacing (in)	Length (in)	Length / ft (ft / ft)	M_C (k-ft / ft)	Bar #	Quantity	A_s (in^2)	M_w (k-ft / ft)				L_{CR} (ft)	ΦR_w (kips)	ΦR_w (kips)
6	26.125	0.25	4	30	115.66	3.86	9.90	3	5	0.55	8.85	4.46	$4.54	$20.44	8.81	61.6	***55.4***
6	26.125	0.25	4	30	115.66	3.86	9.90	3	7	0.77	13.21	5.21	$5.31	$20.44	9.17	64.1	***57.7***
6	26.125	0.25	4	30	115.66	3.86	9.90	3	9	0.99	17.50	5.96	$6.08	$20.44	9.49	66.4	***59.7***
6	26.125	0.25	4	30	115.66	3.86	9.90	3	11	1.21	21.76	6.71	$6.85	$20.44	9.80	68.5	***61.6***
6	26.125	0.25	4	30	115.66	3.86	9.90	3	13	1.43	26.00	7.46	$7.61	$20.44	10.09	70.5	***63.5***
6	26.125	0.25	4	30	115.66	3.86	9.90	4	5	1.00	15.94	5.92	$6.03	$20.44	9.38	65.5	***59.0***
6	26.125	0.25	4	30	115.66	3.86	9.90	4	7	1.40	23.71	7.25	$7.40	$20.44	9.93	69.4	***62.5***
6	26.125	0.25	4	30	115.66	3.86	9.90	4	9	1.80	31.29	8.59	$8.76	$20.44	10.43	72.9	***65.6***
6	26.125	0.25	4	30	115.66	3.86	9.90	4	11	2.20	38.76	9.92	$10.12	$20.44	10.89	76.1	***68.5***
6	26.125	0.25	4	30	115.66	3.86	9.90	4	13	2.60	46.06	11.26	$11.48	$20.44	11.30	79.0	***71.1***
6	26.125	0.25	4	30	115.66	3.86	9.90	5	5	1.55	24.47	7.79	$7.95	$20.44	9.99	69.8	***62.8***
6	26.125	0.25	4	30	115.66	3.86	9.90	5	7	2.17	36.18	9.88	$10.07	$20.44	10.73	75.0	***67.5***
6	26.125	0.25	4	30	115.66	3.86	9.90	5	9	2.79	47.50	11.96	$12.20	$20.44	11.38	79.6	***71.6***
6	26.125	0.25	4	30	115.66	3.86	9.90	5	11	3.41	58.47	14.05	$14.33	$20.44	11.96	83.6	***75.2***
6	26.125	0.25	4	30	115.66	3.86	9.90	5	13	4.03	68.56	16.13	$16.46	$20.44	12.46	87.1	***78.4***
6	26.125	0.25	4	30	115.66	3.86	9.90	6	5	2.20	34.29	10.09	$10.29	$20.44	10.62	74.2	***66.8***
6	26.125	0.25	4	30	115.66	3.86	9.90	6	7	3.08	50.38	13.09	$13.35	$20.44	11.54	80.6	***72.6***
6	26.125	0.25	4	30	115.66	3.86	9.90	6	9	3.96	65.38	16.09	$16.42	$20.44	12.31	86.0	***77.4***
6	26.125	0.25	4	30	115.66	3.86	9.90	6	11	4.84	79.00	19.10	$19.48	$20.44	12.95	90.5	***81.4***
6	26.125	0.25	4	30	115.66	3.86	9.90	6	13	5.72	92.24	22.10	$22.54	$20.44	13.53	94.5	***85.1***
6	26.125	0.25	4	36	115.66	3.21	8.28	3	5	0.55	8.85	4.03	$4.11	$20.44	8.96	52.3	***47.1***
6	26.125	0.25	4	36	115.66	3.21	8.28	3	7	0.77	13.21	4.78	$4.87	$20.44	9.37	54.7	***49.3***
6	26.125	0.25	4	36	115.66	3.21	8.28	3	9	0.99	17.50	5.53	$5.64	$20.44	9.74	56.9	***51.2***
6	26.125	0.25	4	36	115.66	3.21	8.28	3	11	1.21	21.76	6.28	$6.41	$20.44	10.09	59.0	***53.1***
6	26.125	0.25	4	36	115.66	3.21	8.28	3	13	1.43	26.00	7.03	$7.17	$20.44	10.42	60.9	***54.8***
6	26.125	0.25	4	36	115.66	3.21	8.28	4	5	1.00	15.94	5.49	$5.60	$20.44	9.61	56.1	***50.5***
6	26.125	0.25	4	36	115.66	3.21	8.28	4	7	1.40	23.71	6.82	$6.96	$20.44	10.24	59.9	***53.9***
6	26.125	0.25	4	36	115.66	3.21	8.28	4	9	1.80	31.29	8.16	$8.32	$20.44	10.81	63.2	***56.8***
6	26.125	0.25	4	36	115.66	3.21	8.28	4	11	2.20	38.76	9.49	$9.68	$20.44	11.32	66.1	***59.5***
6	26.125	0.25	4	36	115.66	3.21	8.28	4	13	2.60	46.06	10.83	$11.05	$20.44	11.79	68.9	***62.0***
6	26.125	0.25	4	36	115.66	3.21	8.28	5	5	1.55	24.47	7.36	$7.51	$20.44	10.30	60.2	***54.2***
6	26.125	0.25	4	36	115.66	3.21	8.28	5	7	2.17	36.18	9.45	$9.64	$20.44	11.15	65.1	***58.6***
6	26.125	0.25	4	36	115.66	3.21	8.28	5	9	2.79	47.50	11.53	$11.76	$20.44	11.88	69.4	***62.5***
6	26.125	0.25	4	36	115.66	3.21	8.28	5	11	3.41	58.47	13.62	$13.89	$20.44	12.53	73.2	***65.9***
6	26.125	0.25	4	36	115.66	3.21	8.28	5	13	4.03	68.56	15.71	$16.02	$20.44	13.08	76.4	***68.8***
6	26.125	0.25	4	36	115.66	3.21	8.28	6	5	2.20	34.29	9.66	$9.85	$20.44	11.02	64.4	***57.9***
6	26.125	0.25	4	36	115.66	3.21	8.28	6	7	3.08	50.38	12.66	$12.91	$20.44	12.05	70.4	***63.4***
6	26.125	0.25	4	36	115.66	3.21	8.28	6	9	3.96	65.38	15.66	$15.98	$20.44	12.91	75.4	***67.9***
6	26.125	0.25	4	36	115.66	3.21	8.28	6	11	4.84	79.00	18.67	$19.04	$20.44	13.62	79.6	***71.6***
6	26.125	0.25	4	36	115.66	3.21	8.28	6	13	5.72	92.24	21.67	$22.11	$20.44	14.27	83.4	***75.0***

White Text - inadequate temperature and shrinkage steel
Italic Text - inadequate structural capacity
Highlighted Row - good design – valid for use

1 in. = 25.4 mm
1 ft = 0.3048 m
1 kip = 4.448 kN

Table B-1 (continued). Barrier End Section Strength and Cost Calculations for All Configurations

Top Width (in)	Base Width (in)	Concrete Volume (yd^3 / ft)	Stirrups					Longitudinal Steel				Weight of Steel (lb / ft)	Cost of Steel ($ / ft)	Cost of Concrete ($ / ft)	Yield Line Calculations		
			Bar #	Spacing (in)	Length (in)	Length / ft (ft / ft)	M_C (k-ft / ft)	Bar #	Quantity	A_s (in^2)	M_w (k-ft / ft)				L_{CR} (ft)	ΦR_w (kips)	ΦR_w (kips)
6	26.125	0.25	5	12	117.10	9.76	37.33	3	5	0.55	8.85	12.06	$12.30	$20.44	8.23	216.9	***195.2***
6	26.125	0.25	5	12	117.10	9.76	37.33	3	7	0.77	13.21	12.81	$13.07	$20.44	8.34	219.8	***197.8***
6	26.125	0.25	5	12	117.10	9.76	37.33	3	9	0.99	17.50	13.56	$13.83	$20.44	8.45	222.6	***200.3***
6	26.125	0.25	5	12	117.10	9.76	37.33	3	11	1.21	21.76	14.31	$14.60	$20.44	8.55	225.3	***202.7***
6	26.125	0.25	5	12	117.10	9.76	37.33	3	13	1.43	26.00	15.07	$15.37	$20.44	8.65	227.9	***205.1***
6	26.125	0.25	5	12	117.10	9.76	37.33	4	5	1.00	15.94	13.52	$13.79	$20.44	8.41	221.6	***199.4***
6	26.125	0.25	5	12	117.10	9.76	37.33	4	7	1.40	23.71	14.85	$15.15	$20.44	8.59	226.5	***203.8***
6	26.125	0.25	5	12	117.10	9.76	37.33	4	9	1.80	31.29	16.19	$16.51	$20.44	8.77	231.0	***207.9***
6	26.125	0.25	5	12	117.10	9.76	37.33	4	11	2.20	38.76	17.53	$17.88	$20.44	8.93	235.4	***211.9***
6	26.125	0.25	5	12	117.10	9.76	37.33	4	13	2.60	46.06	18.86	$19.24	$20.44	9.09	239.5	215.6
6	26.125	0.25	5	12	117.10	9.76	37.33	5	5	1.55	24.47	15.39	$15.70	$20.44	8.61	226.9	***204.2***
6	26.125	0.25	5	12	117.10	9.76	37.33	5	7	2.17	36.18	17.48	$17.83	$20.44	8.88	233.9	***210.5***
6	26.125	0.25	5	12	117.10	9.76	37.33	5	9	2.79	47.50	19.57	$19.96	$20.44	9.12	240.3	216.3
6	26.125	0.25	5	12	117.10	9.76	37.33	5	11	3.41	58.47	21.65	$22.08	$20.44	9.35	246.3	221.7
6	26.125	0.25	5	12	117.10	9.76	37.33	5	13	4.03	68.56	23.74	$24.21	$20.44	9.54	251.5	226.4
6	26.125	0.25	5	12	117.10	9.76	37.33	6	5	2.20	34.29	17.69	$18.04	$20.44	8.83	232.8	***209.5***
6	26.125	0.25	5	12	117.10	9.76	37.33	6	7	3.08	50.38	20.69	$21.11	$20.44	9.18	241.9	217.7
6	26.125	0.25	5	12	117.10	9.76	37.33	6	9	3.96	65.38	23.70	$24.17	$20.44	9.48	249.9	224.9
6	26.125	0.25	5	12	117.10	9.76	37.33	6	11	4.84	79.00	26.70	$27.23	$20.44	9.74	256.8	231.1
6	26.125	0.25	5	12	117.10	9.76	37.33	6	13	5.72	92.24	29.70	$30.30	$20.44	9.99	263.2	236.8
6	26.125	0.25	5	18	117.10	6.51	25.22	3	5	0.55	8.85	8.67	$8.84	$20.44	8.34	148.4	***133.6***
6	26.125	0.25	5	18	117.10	6.51	25.22	3	7	0.77	13.21	9.42	$9.61	$20.44	8.49	151.2	***136.1***
6	26.125	0.25	5	18	117.10	6.51	25.22	3	9	0.99	17.50	10.17	$10.37	$20.44	8.64	153.9	***138.5***
6	26.125	0.25	5	18	117.10	6.51	25.22	3	11	1.21	21.76	10.92	$11.14	$20.44	8.79	156.5	***140.8***
6	26.125	0.25	5	18	117.10	6.51	25.22	3	13	1.43	26.00	11.67	$11.91	$20.44	8.93	158.9	***143.0***
6	26.125	0.25	5	18	117.10	6.51	25.22	4	5	1.00	15.94	10.13	$10.33	$20.44	8.59	152.9	***137.7***
6	26.125	0.25	5	18	117.10	6.51	25.22	4	7	1.40	23.71	11.46	$11.69	$20.44	8.85	157.6	***141.8***
6	26.125	0.25	5	18	117.10	6.51	25.22	4	9	1.80	31.29	12.80	$13.05	$20.44	9.10	161.9	***145.7***
6	26.125	0.25	5	18	117.10	6.51	25.22	4	11	2.20	38.76	14.13	$14.42	$20.44	9.32	166.0	***149.4***
6	26.125	0.25	5	18	117.10	6.51	25.22	4	13	2.60	46.06	15.47	$15.78	$20.44	9.54	169.8	***152.8***
6	26.125	0.25	5	18	117.10	6.51	25.22	5	5	1.55	24.47	12.00	$12.24	$20.44	8.88	158.1	***142.2***
6	26.125	0.25	5	18	117.10	6.51	25.22	5	7	2.17	36.18	14.09	$14.37	$20.44	9.25	164.6	***148.1***
6	26.125	0.25	5	18	117.10	6.51	25.22	5	9	2.79	47.50	16.17	$16.50	$20.44	9.58	170.5	***153.5***
6	26.125	0.25	5	18	117.10	6.51	25.22	5	11	3.41	58.47	18.26	$18.62	$20.44	9.88	176.0	***158.4***
6	26.125	0.25	5	18	117.10	6.51	25.22	5	13	4.03	68.56	20.34	$20.75	$20.44	10.15	180.7	***162.6***
6	26.125	0.25	5	18	117.10	6.51	25.22	6	5	2.20	34.29	14.30	$14.58	$20.44	9.19	163.6	***147.2***
6	26.125	0.25	5	18	117.10	6.51	25.22	6	7	3.08	50.38	17.30	$17.65	$20.44	9.66	172.0	***154.8***
6	26.125	0.25	5	18	117.10	6.51	25.22	6	9	3.96	65.38	20.30	$20.71	$20.44	10.07	179.2	***161.3***
6	26.125	0.25	5	18	117.10	6.51	25.22	6	11	4.84	79.00	23.31	$23.77	$20.44	10.41	185.4	***166.9***
6	26.125	0.25	5	18	117.10	6.51	25.22	6	13	5.72	92.24	26.31	$26.84	$20.44	10.73	191.1	***172.0***

White Text - inadequate temperature and shrinkage steel
Italic Text - inadequate structural capacity
Highlighted Row - good design – valid for use

1 in. = 25.4 mm
1 ft = 0.3048 m
1 kip = 4.448 kN

Table B-1 (continued). Barrier End Section Strength and Cost Calculations for All Configurations

Top Width (in)	Base Width (in)	Concrete Volume (yd^3 / ft)	Stirrups					Longitudinal Steel				Weight of Steel (lb / ft)	Cost of Steel ($ / ft)	Cost of Concrete ($ / ft)	Yield Line Calculations		
			Bar #	Spacing (in)	Length (in)	Length / ft (ft / ft)	M_C (k-ft / ft)	Bar #	Quantity	A_s (in^2)	M_w (k-ft / ft)				L_{CR} (ft)	ΦR_w (kips)	ΦR_w (kips)
6	26.125	0.25	5	24	117.10	4.88	19.04	3	5	0.55	8.85	6.97	$7.11	$20.44	8.44	113.5	***102.1***
6	26.125	0.25	5	24	117.10	4.88	19.04	3	7	0.77	13.21	7.72	$7.88	$20.44	8.64	116.2	***104.6***
6	26.125	0.25	5	24	117.10	4.88	19.04	3	9	0.99	17.50	8.47	$8.64	$20.44	8.84	118.8	***106.9***
6	26.125	0.25	5	24	117.10	4.88	19.04	3	11	1.21	21.76	9.23	$9.41	$20.44	9.02	121.2	***109.1***
6	26.125	0.25	5	24	117.10	4.88	19.04	3	13	1.43	26.00	9.98	$10.18	$20.44	9.19	123.6	***111.2***
6	26.125	0.25	5	24	117.10	4.88	19.04	4	5	1.00	15.94	8.43	$8.60	$20.44	8.77	117.8	***106.1***
6	26.125	0.25	5	24	117.10	4.88	19.04	4	7	1.40	23.71	9.77	$9.96	$20.44	9.10	122.3	***110.1***
6	26.125	0.25	5	24	117.10	4.88	19.04	4	9	1.80	31.29	11.10	$11.32	$20.44	9.40	126.4	***113.7***
6	26.125	0.25	5	24	117.10	4.88	19.04	4	11	2.20	38.76	12.44	$12.69	$20.44	9.69	130.2	***117.2***
6	26.125	0.25	5	24	117.10	4.88	19.04	4	13	2.60	46.06	13.77	$14.05	$20.44	9.95	133.8	***120.4***
6	26.125	0.25	5	24	117.10	4.88	19.04	5	5	1.55	24.47	10.30	$10.51	$20.44	9.13	122.7	***110.4***
6	26.125	0.25	5	24	117.10	4.88	19.04	5	7	2.17	36.18	12.39	$12.64	$20.44	9.59	128.9	***116.0***
6	26.125	0.25	5	24	117.10	4.88	19.04	5	9	2.79	47.50	14.48	$14.77	$20.44	10.00	134.4	***121.0***
6	26.125	0.25	5	24	117.10	4.88	19.04	5	11	3.41	58.47	16.56	$16.89	$20.44	10.38	139.5	***125.5***
6	26.125	0.25	5	24	117.10	4.88	19.04	5	13	4.03	68.56	18.65	$19.02	$20.44	10.70	143.8	***129.5***
6	26.125	0.25	5	24	117.10	4.88	19.04	6	5	2.20	34.29	12.60	$12.85	$20.44	9.52	127.9	***115.2***
6	26.125	0.25	5	24	117.10	4.88	19.04	6	7	3.08	50.38	15.60	$15.92	$20.44	10.10	135.8	***122.2***
6	26.125	0.25	5	24	117.10	4.88	19.04	6	9	3.96	65.38	18.61	$18.98	$20.44	10.60	142.5	***128.2***
6	26.125	0.25	5	24	117.10	4.88	19.04	6	11	4.84	79.00	21.61	$22.04	$20.44	11.02	148.1	***133.3***
6	26.125	0.25	5	24	117.10	4.88	19.04	6	13	5.72	92.24	24.62	$25.11	$20.44	11.41	153.3	***138.0***
6	26.125	0.25	5	30	117.10	3.90	15.27	3	5	0.55	8.85	5.95	$6.07	$20.44	8.54	92.1	***82.9***
6	26.125	0.25	5	30	117.10	3.90	15.27	3	7	0.77	13.21	6.70	$6.84	$20.44	8.79	94.7	***85.3***
6	26.125	0.25	5	30	117.10	3.90	15.27	3	9	0.99	17.50	7.46	$7.60	$20.44	9.02	97.2	***87.5***
6	26.125	0.25	5	30	117.10	3.90	15.27	3	11	1.21	21.76	8.21	$8.37	$20.44	9.24	99.6	***89.6***
6	26.125	0.25	5	30	117.10	3.90	15.27	3	13	1.43	26.00	8.96	$9.14	$20.44	9.45	101.8	***91.6***
6	26.125	0.25	5	30	117.10	3.90	15.27	4	5	1.00	15.94	7.41	$7.56	$20.44	8.94	96.3	***86.7***
6	26.125	0.25	5	30	117.10	3.90	15.27	4	7	1.40	23.71	8.75	$8.92	$20.44	9.34	100.6	***90.5***
6	26.125	0.25	5	30	117.10	3.90	15.27	4	9	1.80	31.29	10.08	$10.28	$20.44	9.70	104.5	***94.0***
6	26.125	0.25	5	30	117.10	3.90	15.27	4	11	2.20	38.76	11.42	$11.65	$20.44	10.03	108.1	***97.3***
6	26.125	0.25	5	30	117.10	3.90	15.27	4	13	2.60	46.06	12.76	$13.01	$20.44	10.34	111.4	***100.3***
6	26.125	0.25	5	30	117.10	3.90	15.27	5	5	1.55	24.47	9.29	$9.47	$20.44	9.37	101.0	***90.9***
6	26.125	0.25	5	30	117.10	3.90	15.27	5	7	2.17	36.18	11.37	$11.60	$20.44	9.92	106.9	***96.2***
6	26.125	0.25	5	30	117.10	3.90	15.27	5	9	2.79	47.50	13.46	$13.73	$20.44	10.40	112.1	***100.9***
6	26.125	0.25	5	30	117.10	3.90	15.27	5	11	3.41	58.47	15.54	$15.86	$20.44	10.84	116.8	***105.1***
6	26.125	0.25	5	30	117.10	3.90	15.27	5	13	4.03	68.56	17.63	$17.98	$20.44	11.21	120.9	***108.8***
6	26.125	0.25	5	30	117.10	3.90	15.27	6	5	2.20	34.29	11.58	$11.81	$20.44	9.83	106.0	***95.4***
6	26.125	0.25	5	30	117.10	3.90	15.27	6	7	3.08	50.38	14.59	$14.88	$20.44	10.52	113.4	***102.0***
6	26.125	0.25	5	30	117.10	3.90	15.27	6	9	3.96	65.38	17.59	$17.94	$20.44	11.10	119.6	***107.6***
6	26.125	0.25	5	30	117.10	3.90	15.27	6	11	4.84	79.00	20.59	$21.01	$20.44	11.59	124.9	***112.4***
6	26.125	0.25	5	30	117.10	3.90	15.27	6	13	5.72	92.24	23.60	$24.07	$20.44	12.03	129.7	***116.7***

White Text - inadequate temperature and shrinkage steel
Italic Text - inadequate structural capacity
Highlighted Row - good design – valid for use

1 in. = 25.4 mm
1 ft = 0.3048 m
1 kip = 4.448 kN

Table B-1 (continued). Barrier End Section Strength and Cost Calculations for All Configurations

Top Width (in)	Base Width (in)	Concrete Volume (yd^3 / ft)	Stirrups					Longitudinal Steel				Weight of Steel (lb / ft)	Cost of Steel ($ / ft)	Cost of Concrete ($ / ft)	Yield Line Calculations		
			Bar #	Spacing (in)	Length (in)	Length / ft (ft / ft)	M_C (k-ft / ft)	Bar #	Quantity	A_s (in^2)	M_w (k-ft / ft)				L_{CR} (ft)	ΦR_w (kips)	ΦR_w (kips)
6	26.125	0.25	5	36	117.10	3.25	12.75	3	5	0.55	8.85	5.27	$5.38	$20.44	8.64	77.8	***70.0***
6	26.125	0.25	5	36	117.10	3.25	12.75	3	7	0.77	13.21	6.02	$6.15	$20.44	8.93	80.4	***72.3***
6	26.125	0.25	5	36	117.10	3.25	12.75	3	9	0.99	17.50	6.78	$6.91	$20.44	9.20	82.8	***74.5***
6	26.125	0.25	5	36	117.10	3.25	12.75	3	11	1.21	21.76	7.53	$7.68	$20.44	9.45	85.1	***76.5***
6	26.125	0.25	5	36	117.10	3.25	12.75	3	13	1.43	26.00	8.28	$8.45	$20.44	9.69	87.2	***78.5***
6	26.125	0.25	5	36	117.10	3.25	12.75	4	5	1.00	15.94	6.73	$6.87	$20.44	9.10	81.9	***73.7***
6	26.125	0.25	5	36	117.10	3.25	12.75	4	7	1.40	23.71	8.07	$8.23	$20.44	9.56	86.0	***77.4***
6	26.125	0.25	5	36	117.10	3.25	12.75	4	9	1.80	31.29	9.40	$9.59	$20.44	9.98	89.8	***80.8***
6	26.125	0.25	5	36	117.10	3.25	12.75	4	11	2.20	38.76	10.74	$10.96	$20.44	10.36	93.2	***83.9***
6	26.125	0.25	5	36	117.10	3.25	12.75	4	13	2.60	46.06	12.08	$12.32	$20.44	10.71	96.4	***86.7***
6	26.125	0.25	5	36	117.10	3.25	12.75	5	5	1.55	24.47	8.61	$8.78	$20.44	9.60	86.4	***77.8***
6	26.125	0.25	5	36	117.10	3.25	12.75	5	7	2.17	36.18	10.69	$10.91	$20.44	10.23	92.0	***82.8***
6	26.125	0.25	5	36	117.10	3.25	12.75	5	9	2.79	47.50	12.78	$13.04	$20.44	10.78	97.0	***87.3***
6	26.125	0.25	5	36	117.10	3.25	12.75	5	11	3.41	58.47	14.87	$15.16	$20.44	11.27	101.4	***91.3***
6	26.125	0.25	5	36	117.10	3.25	12.75	5	13	4.03	68.56	16.95	$17.29	$20.44	11.69	105.2	***94.7***
6	26.125	0.25	5	36	117.10	3.25	12.75	6	5	2.20	34.29	10.90	$11.12	$20.44	10.13	91.2	***82.1***
6	26.125	0.25	5	36	117.10	3.25	12.75	6	7	3.08	50.38	13.91	$14.18	$20.44	10.91	98.2	***88.4***
6	26.125	0.25	5	36	117.10	3.25	12.75	6	9	3.96	65.38	16.91	$17.25	$20.44	11.56	104.0	***93.6***
6	26.125	0.25	5	36	117.10	3.25	12.75	6	11	4.84	79.00	19.91	$20.31	$20.44	12.11	109.0	***98.1***
6	26.125	0.25	5	36	117.10	3.25	12.75	6	13	5.72	92.24	22.92	$23.38	$20.44	12.61	113.5	***102.1***
6	26.125	0.25	6	12	131.74	10.98	52.17	3	5	0.55	8.85	18.37	$18.74	$20.44	8.17	300.7	270.7
6	26.125	0.25	6	12	131.74	10.98	52.17	3	7	0.77	13.21	19.12	$19.50	$20.44	8.25	303.7	273.3
6	26.125	0.25	6	12	131.74	10.98	52.17	3	9	0.99	17.50	19.87	$20.27	$20.44	8.32	306.5	275.9
6	26.125	0.25	6	12	131.74	10.98	52.17	3	11	1.21	21.76	20.63	$21.04	$20.44	8.40	309.3	278.3
6	26.125	0.25	6	12	131.74	10.98	52.17	3	13	1.43	26.00	21.38	$21.81	$20.44	8.47	312.0	280.8
6	26.125	0.25	6	12	131.74	10.98	52.17	4	5	1.00	15.94	19.83	$20.23	$20.44	8.30	305.5	274.9
6	26.125	0.25	6	12	131.74	10.98	52.17	4	7	1.40	23.71	21.17	$21.59	$20.44	8.43	310.5	279.5
6	26.125	0.25	6	12	131.74	10.98	52.17	4	9	1.80	31.29	22.50	$22.95	$20.44	8.56	315.3	283.8
6	26.125	0.25	6	12	131.74	10.98	52.17	4	11	2.20	38.76	23.84	$24.31	$20.44	8.69	319.9	287.9
6	26.125	0.25	6	12	131.74	10.98	52.17	4	13	2.60	46.06	25.17	$25.68	$20.44	8.80	324.2	291.8
6	26.125	0.25	6	12	131.74	10.98	52.17	5	5	1.55	24.47	21.70	$22.14	$20.44	8.45	311.0	279.9
6	26.125	0.25	6	12	131.74	10.98	52.17	5	7	2.17	36.18	23.79	$24.27	$20.44	8.64	318.3	286.5
6	26.125	0.25	6	12	131.74	10.98	52.17	5	9	2.79	47.50	25.88	$26.39	$20.44	8.83	325.1	292.6
6	26.125	0.25	6	12	131.74	10.98	52.17	5	11	3.41	58.47	27.96	$28.52	$20.44	9.00	331.4	298.3
6	26.125	0.25	6	12	131.74	10.98	52.17	5	13	4.03	68.56	30.05	$30.65	$20.44	9.15	337.0	303.3
6	26.125	0.25	6	12	131.74	10.98	52.17	6	5	2.20	34.29	24.00	$24.48	$20.44	8.61	317.2	285.4
6	26.125	0.25	6	12	131.74	10.98	52.17	6	7	3.08	50.38	27.00	$27.54	$20.44	8.87	326.8	294.1
6	26.125	0.25	6	12	131.74	10.98	52.17	6	9	3.96	65.38	30.01	$30.61	$20.44	9.11	335.3	301.8
6	26.125	0.25	6	12	131.74	10.98	52.17	6	11	4.84	79.00	33.01	$33.67	$20.44	9.31	342.7	308.4
6	26.125	0.25	6	12	131.74	10.98	52.17	6	13	5.72	92.24	36.02	$36.74	$20.44	9.49	349.6	314.7

White Text - inadequate temperature and shrinkage steel
Italic Text - inadequate structural capacity
Highlighted Row - good design – valid for use

1 in. = 25.4 mm
1 ft = 0.3048 m
1 kip = 4.448 kN

Table B-1 (continued). Barrier End Section Strength and Cost Calculations for All Configurations

Top Width (in)	Base Width (in)	Concrete Volume (yd^3 / ft)	Stirrups					Longitudinal Steel				Weight of Steel (lb / ft)	Cost of Steel ($ / ft)	Cost of Concrete ($ / ft)	Yield Line Calculations		
			Bar #	Spacing (in)	Length (in)	Length / ft (ft / ft)	M_C (k-ft / ft)	Bar #	Quantity	A_s (in^2)	M_w (k-ft / ft)				L_{CR} (ft)	ΦR_w (kips)	ΦR_w (kips)
6	26.125	0.25	6	18	131.74	7.32	35.39	3	5	0.55	8.85	12.87	$13.13	$20.44	8.24	205.9	***185.3***
6	26.125	0.25	6	18	131.74	7.32	35.39	3	7	0.77	13.21	13.62	$13.90	$20.44	8.36	208.8	***187.9***
6	26.125	0.25	6	18	131.74	7.32	35.39	3	9	0.99	17.50	14.38	$14.66	$20.44	8.47	211.6	***190.4***
6	26.125	0.25	6	18	131.74	7.32	35.39	3	11	1.21	21.76	15.13	$15.43	$20.44	8.58	214.2	***192.8***
6	26.125	0.25	6	18	131.74	7.32	35.39	3	13	1.43	26.00	15.88	$16.20	$20.44	8.68	216.8	***195.1***
6	26.125	0.25	6	18	131.74	7.32	35.39	4	5	1.00	15.94	14.33	$14.62	$20.44	8.43	210.6	***189.5***
6	26.125	0.25	6	18	131.74	7.32	35.39	4	7	1.40	23.71	15.67	$15.98	$20.44	8.62	215.4	***193.9***
6	26.125	0.25	6	18	131.74	7.32	35.39	4	9	1.80	31.29	17.00	$17.35	$20.44	8.81	220.0	***198.0***
6	26.125	0.25	6	18	131.74	7.32	35.39	4	11	2.20	38.76	18.34	$18.71	$20.44	8.98	224.3	***201.9***
6	26.125	0.25	6	18	131.74	7.32	35.39	4	13	2.60	46.06	19.68	$20.07	$20.44	9.14	228.4	***205.6***
6	26.125	0.25	6	18	131.74	7.32	35.39	5	5	1.55	24.47	16.21	$16.53	$20.44	8.64	215.9	***194.3***
6	26.125	0.25	6	18	131.74	7.32	35.39	5	7	2.17	36.18	18.29	$18.66	$20.44	8.92	222.8	***200.5***
6	26.125	0.25	6	18	131.74	7.32	35.39	5	9	2.79	47.50	20.38	$20.79	$20.44	9.17	229.2	***206.3***
6	26.125	0.25	6	18	131.74	7.32	35.39	5	11	3.41	58.47	22.47	$22.92	$20.44	9.41	235.1	***211.5***
6	26.125	0.25	6	18	131.74	7.32	35.39	5	13	4.03	68.56	24.55	$25.04	$20.44	9.62	240.2	216.2
6	26.125	0.25	6	18	131.74	7.32	35.39	6	5	2.20	34.29	18.50	$18.87	$20.44	8.88	221.7	***199.6***
6	26.125	0.25	6	18	131.74	7.32	35.39	6	7	3.08	50.38	21.51	$21.94	$20.44	9.24	230.8	***207.7***
6	26.125	0.25	6	18	131.74	7.32	35.39	6	9	3.96	65.38	24.51	$25.00	$20.44	9.55	238.6	214.8
6	26.125	0.25	6	18	131.74	7.32	35.39	6	11	4.84	79.00	27.51	$28.07	$20.44	9.82	245.4	220.9
6	26.125	0.25	6	18	131.74	7.32	35.39	6	13	5.72	92.24	30.52	$31.13	$20.44	10.08	251.7	226.5
6	26.125	0.25	6	24	131.74	5.49	26.79	3	5	0.55	8.85	10.12	$10.33	$20.44	8.32	157.3	***141.6***
6	26.125	0.25	6	24	131.74	5.49	26.79	3	7	0.77	13.21	10.88	$11.09	$20.44	8.47	160.1	***144.1***
6	26.125	0.25	6	24	131.74	5.49	26.79	3	9	0.99	17.50	11.63	$11.86	$20.44	8.61	162.8	***146.5***
6	26.125	0.25	6	24	131.74	5.49	26.79	3	11	1.21	21.76	12.38	$12.63	$20.44	8.75	165.4	***148.9***
6	26.125	0.25	6	24	131.74	5.49	26.79	3	13	1.43	26.00	13.13	$13.40	$20.44	8.88	167.9	***151.1***
6	26.125	0.25	6	24	131.74	5.49	26.79	4	5	1.00	15.94	11.58	$11.82	$20.44	8.56	161.8	***145.7***
6	26.125	0.25	6	24	131.74	5.49	26.79	4	7	1.40	23.71	12.92	$13.18	$20.44	8.81	166.5	***149.9***
6	26.125	0.25	6	24	131.74	5.49	26.79	4	9	1.80	31.29	14.26	$14.54	$20.44	9.04	170.9	***153.8***
6	26.125	0.25	6	24	131.74	5.49	26.79	4	11	2.20	38.76	15.59	$15.90	$20.44	9.26	175.0	***157.5***
6	26.125	0.25	6	24	131.74	5.49	26.79	4	13	2.60	46.06	16.93	$17.27	$20.44	9.46	178.9	***161.0***
6	26.125	0.25	6	24	131.74	5.49	26.79	5	5	1.55	24.47	13.46	$13.73	$20.44	8.83	167.0	***150.3***
6	26.125	0.25	6	24	131.74	5.49	26.79	5	7	2.17	36.18	15.55	$15.86	$20.44	9.18	173.6	***156.3***
6	26.125	0.25	6	24	131.74	5.49	26.79	5	9	2.79	47.50	17.63	$17.98	$20.44	9.50	179.6	***161.7***
6	26.125	0.25	6	24	131.74	5.49	26.79	5	11	3.41	58.47	19.72	$20.11	$20.44	9.79	185.1	***166.6***
6	26.125	0.25	6	24	131.74	5.49	26.79	5	13	4.03	68.56	21.80	$22.24	$20.44	10.05	190.0	***171.0***
6	26.125	0.25	6	24	131.74	5.49	26.79	6	5	2.20	34.29	15.75	$16.07	$20.44	9.13	172.6	***155.3***
6	26.125	0.25	6	24	131.74	5.49	26.79	6	7	3.08	50.38	18.76	$19.13	$20.44	9.58	181.1	***163.0***
6	26.125	0.25	6	24	131.74	5.49	26.79	6	9	3.96	65.38	21.76	$22.20	$20.44	9.97	188.5	***169.6***
6	26.125	0.25	6	24	131.74	5.49	26.79	6	11	4.84	79.00	24.77	$25.26	$20.44	10.30	194.8	***175.3***
6	26.125	0.25	6	24	131.74	5.49	26.79	6	13	5.72	92.24	27.77	$28.33	$20.44	10.61	200.6	***180.5***

White Text - inadequate temperature and shrinkage steel
Italic Text - inadequate structural capacity
Highlighted Row - good design – valid for use

1 in. = 25.4 mm
1 ft = 0.3048 m
1 kip = 4.448 kN

Table B-1 (continued). Barrier End Section Strength and Cost Calculations for All Configurations

Top Width (in)	Base Width (in)	Concrete Volume (yd^3 / ft)	Stirrups					Longitudinal Steel				Weight of Steel (lb / ft)	Cost of Steel ($ / ft)	Cost of Concrete ($ / ft)	Yield Line Calculations		
			Bar #	Spacing (in)	Length (in)	Length / ft (ft / ft)	M_C (k-ft / ft)	Bar #	Quantity	A_s (in^2)	M_w (k-ft / ft)				L_{CR} (ft)	ΦR_w (kips)	ΦR_w (kips)
6	26.125	0.25	6	30	131.74	4.39	21.53	3	5	0.55	8.85	8.48	$8.65	$20.44	8.39	127.6	***114.8***
6	26.125	0.25	6	30	131.74	4.39	21.53	3	7	0.77	13.21	9.23	$9.41	$20.44	8.57	130.3	***117.3***
6	26.125	0.25	6	30	131.74	4.39	21.53	3	9	0.99	17.50	9.98	$10.18	$20.44	8.75	132.9	***119.6***
6	26.125	0.25	6	30	131.74	4.39	21.53	3	11	1.21	21.76	10.73	$10.95	$20.44	8.91	135.4	***121.9***
6	26.125	0.25	6	30	131.74	4.39	21.53	3	13	1.43	26.00	11.48	$11.71	$20.44	9.07	137.8	***124.1***
6	26.125	0.25	6	30	131.74	4.39	21.53	4	5	1.00	15.94	9.94	$10.13	$20.44	8.68	132.0	***118.8***
6	26.125	0.25	6	30	131.74	4.39	21.53	4	7	1.40	23.71	11.27	$11.50	$20.44	8.98	136.6	***122.9***
6	26.125	0.25	6	30	131.74	4.39	21.53	4	9	1.80	31.29	12.61	$12.86	$20.44	9.26	140.8	***126.7***
6	26.125	0.25	6	30	131.74	4.39	21.53	4	11	2.20	38.76	13.94	$14.22	$20.44	9.52	144.7	***130.2***
6	26.125	0.25	6	30	131.74	4.39	21.53	4	13	2.60	46.06	15.28	$15.59	$20.44	9.76	148.3	***133.5***
6	26.125	0.25	6	30	131.74	4.39	21.53	5	5	1.55	24.47	11.81	$12.05	$20.44	9.01	137.0	***123.3***
6	26.125	0.25	6	30	131.74	4.39	21.53	5	7	2.17	36.18	13.90	$14.17	$20.44	9.43	143.3	***129.0***
6	26.125	0.25	6	30	131.74	4.39	21.53	5	9	2.79	47.50	15.98	$16.30	$20.44	9.81	149.0	***134.1***
6	26.125	0.25	6	30	131.74	4.39	21.53	5	11	3.41	58.47	18.07	$18.43	$20.44	10.15	154.3	***138.8***
6	26.125	0.25	6	30	131.74	4.39	21.53	5	13	4.03	68.56	20.15	$20.56	$20.44	10.45	158.8	***142.9***
6	26.125	0.25	6	30	131.74	4.39	21.53	6	5	2.20	34.29	14.11	$14.39	$20.44	9.37	142.4	***128.1***
6	26.125	0.25	6	30	131.74	4.39	21.53	6	7	3.08	50.38	17.11	$17.45	$20.44	9.90	150.4	***135.4***
6	26.125	0.25	6	30	131.74	4.39	21.53	6	9	3.96	65.38	20.11	$20.52	$20.44	10.35	157.4	***141.6***
6	26.125	0.25	6	30	131.74	4.39	21.53	6	11	4.84	79.00	23.12	$23.58	$20.44	10.74	163.3	***146.9***
6	26.125	0.25	6	30	131.74	4.39	21.53	6	13	5.72	92.24	26.12	$26.64	$20.44	11.10	168.7	***151.8***
6	26.125	0.25	6	36	131.74	3.66	18.03	3	5	0.55	8.85	7.38	$7.52	$20.44	8.47	107.7	***97.0***
6	26.125	0.25	6	36	131.74	3.66	18.03	3	7	0.77	13.21	8.13	$8.29	$20.44	8.68	110.4	***99.4***
6	26.125	0.25	6	36	131.74	3.66	18.03	3	9	0.99	17.50	8.88	$9.06	$20.44	8.88	113.0	***101.7***
6	26.125	0.25	6	36	131.74	3.66	18.03	3	11	1.21	21.76	9.63	$9.83	$20.44	9.07	115.4	***103.9***
6	26.125	0.25	6	36	131.74	3.66	18.03	3	13	1.43	26.00	10.38	$10.59	$20.44	9.25	117.7	***106.0***
6	26.125	0.25	6	36	131.74	3.66	18.03	4	5	1.00	15.94	8.84	$9.01	$20.44	8.81	112.1	***100.9***
6	26.125	0.25	6	36	131.74	3.66	18.03	4	7	1.40	23.71	10.17	$10.38	$20.44	9.15	116.5	***104.8***
6	26.125	0.25	6	36	131.74	3.66	18.03	4	9	1.80	31.29	11.51	$11.74	$20.44	9.47	120.5	***108.5***
6	26.125	0.25	6	36	131.74	3.66	18.03	4	11	2.20	38.76	12.84	$13.10	$20.44	9.77	124.3	***111.9***
6	26.125	0.25	6	36	131.74	3.66	18.03	4	13	2.60	46.06	14.18	$14.46	$20.44	10.04	127.8	***115.0***
6	26.125	0.25	6	36	131.74	3.66	18.03	5	5	1.55	24.47	10.71	$10.93	$20.44	9.19	116.9	***105.2***
6	26.125	0.25	6	36	131.74	3.66	18.03	5	7	2.17	36.18	12.80	$13.05	$20.44	9.67	123.0	***110.7***
6	26.125	0.25	6	36	131.74	3.66	18.03	5	9	2.79	47.50	14.88	$15.18	$20.44	10.10	128.5	***115.6***
6	26.125	0.25	6	36	131.74	3.66	18.03	5	11	3.41	58.47	16.97	$17.31	$20.44	10.48	133.4	***120.1***
6	26.125	0.25	6	36	131.74	3.66	18.03	5	13	4.03	68.56	19.06	$19.44	$20.44	10.82	137.7	***123.9***
6	26.125	0.25	6	36	131.74	3.66	18.03	6	5	2.20	34.29	13.01	$13.27	$20.44	9.59	122.1	***109.9***
6	26.125	0.25	6	36	131.74	3.66	18.03	6	7	3.08	50.38	16.01	$16.33	$20.44	10.20	129.8	***116.8***
6	26.125	0.25	6	36	131.74	3.66	18.03	6	9	3.96	65.38	19.01	$19.39	$20.44	10.72	136.4	***122.7***
6	26.125	0.25	6	36	131.74	3.66	18.03	6	11	4.84	79.00	22.02	$22.46	$20.44	11.15	141.9	***127.7***
6	26.125	0.25	6	36	131.74	3.66	18.03	6	13	5.72	92.24	25.02	$25.52	$20.44	11.55	147.0	***132.3***

White Text - inadequate temperature and shrinkage steel
Italic Text - inadequate structural capacity
Highlighted Row - good design – valid for use

1 in. = 25.4 mm
1 ft = 0.3048 m
1 kip = 4.448 kN

Table B-1 (continued). Barrier End Section Strength and Cost Calculations for All Configurations

Top Width (in)	Base Width (in)	Concrete Volume (yd^3 / ft)	Stirrups					Longitudinal Steel				Weight of Steel (lb / ft)	Cost of Steel ($ / ft)	Cost of Concrete ($ / ft)	Yield Line Calculations		
			Bar #	Spacing (in)	Length (in)	Length / ft (ft / ft)	M_C (k-ft / ft)	Bar #	Quantity	A_s (in^2)	M_w (k-ft / ft)				L_{CR} (ft)	ΦR_w (kips)	ΦR_w (kips)
7	27.125	0.26	3	12	116.59	9.72	14.08	3	5	0.55	9.24	5.53	$5.64	$21.38	8.61	85.6	***77.0***
7	27.125	0.26	3	12	116.59	9.72	14.08	3	7	0.77	13.76	6.29	$6.41	$21.38	8.88	88.3	***79.5***
7	27.125	0.26	3	12	116.59	9.72	14.08	3	9	0.99	18.29	7.04	$7.18	$21.38	9.14	90.9	***81.8***
7	27.125	0.26	3	12	116.59	9.72	14.08	3	11	1.21	22.74	7.79	$7.94	$21.38	9.38	93.3	***83.9***
7	27.125	0.26	3	12	116.59	9.72	14.08	3	13	1.43	27.15	8.54	$8.71	$21.38	9.61	95.5	***86.0***
7	27.125	0.26	3	12	116.59	9.72	14.08	4	5	1.00	16.65	6.99	$7.13	$21.38	9.05	90.0	***81.0***
7	27.125	0.26	3	12	116.59	9.72	14.08	4	7	1.40	24.76	8.33	$8.50	$21.38	9.49	94.3	***84.9***
7	27.125	0.26	3	12	116.59	9.72	14.08	4	9	1.80	32.71	9.67	$9.86	$21.38	9.89	98.3	***88.4***
7	27.125	0.26	3	12	116.59	9.72	14.08	4	11	2.20	40.53	11.00	$11.22	$21.38	10.25	101.9	***91.7***
7	27.125	0.26	3	12	116.59	9.72	14.08	4	13	2.60	48.18	12.34	$12.58	$21.38	10.59	105.3	***94.8***
7	27.125	0.26	3	12	116.59	9.72	14.08	5	5	1.55	25.56	8.87	$9.05	$21.38	9.53	94.7	***85.3***
7	27.125	0.26	3	12	116.59	9.72	14.08	5	7	2.17	37.79	10.95	$11.17	$21.38	10.13	100.7	***90.6***
7	27.125	0.26	3	12	116.59	9.72	14.08	5	9	2.79	49.71	13.04	$13.30	$21.38	10.66	106.0	***95.4***
7	27.125	0.26	3	12	116.59	9.72	14.08	5	11	3.41	61.21	15.13	$15.43	$21.38	11.13	110.7	***99.6***
7	27.125	0.26	3	12	116.59	9.72	14.08	5	13	4.03	71.82	17.21	$17.56	$21.38	11.55	114.8	***103.3***
7	27.125	0.26	3	12	116.59	9.72	14.08	6	5	2.20	35.85	11.16	$11.39	$21.38	10.04	99.8	***89.8***
7	27.125	0.26	3	12	116.59	9.72	14.08	6	7	3.08	52.71	14.17	$14.45	$21.38	10.79	107.2	***96.5***
7	27.125	0.26	3	12	116.59	9.72	14.08	6	9	3.96	68.50	17.17	$17.51	$21.38	11.42	113.5	***102.2***
7	27.125	0.26	3	12	116.59	9.72	14.08	6	11	4.84	82.88	20.18	$20.58	$21.38	11.95	118.8	***106.9***
7	27.125	0.26	3	12	116.59	9.72	14.08	6	13	5.72	96.88	23.18	$23.64	$21.38	12.44	123.7	***111.3***
7	27.125	0.26	3	18	116.59	6.48	9.44	3	5	0.55	9.24	4.32	$4.40	$21.38	8.88	59.2	***53.3***
7	27.125	0.26	3	18	116.59	6.48	9.44	3	7	0.77	13.76	5.07	$5.17	$21.38	9.26	61.8	***55.6***
7	27.125	0.26	3	18	116.59	6.48	9.44	3	9	0.99	18.29	5.82	$5.94	$21.38	9.62	64.1	***57.7***
7	27.125	0.26	3	18	116.59	6.48	9.44	3	11	1.21	22.74	6.57	$6.70	$21.38	9.94	66.3	***59.7***
7	27.125	0.26	3	18	116.59	6.48	9.44	3	13	1.43	27.15	7.32	$7.47	$21.38	10.25	68.3	***61.5***
7	27.125	0.26	3	18	116.59	6.48	9.44	4	5	1.00	16.65	5.78	$5.89	$21.38	9.49	63.3	***56.9***
7	27.125	0.26	3	18	116.59	6.48	9.44	4	7	1.40	24.76	7.11	$7.25	$21.38	10.09	67.2	***60.5***
7	27.125	0.26	3	18	116.59	6.48	9.44	4	9	1.80	32.71	8.45	$8.62	$21.38	10.62	70.8	***63.7***
7	27.125	0.26	3	18	116.59	6.48	9.44	4	11	2.20	40.53	9.78	$9.98	$21.38	11.10	74.0	***66.6***
7	27.125	0.26	3	18	116.59	6.48	9.44	4	13	2.60	48.18	11.12	$11.34	$21.38	11.55	77.0	***69.3***
7	27.125	0.26	3	18	116.59	6.48	9.44	5	5	1.55	25.56	7.65	$7.80	$21.38	10.14	67.6	***60.9***
7	27.125	0.26	3	18	116.59	6.48	9.44	5	7	2.17	37.79	9.74	$9.93	$21.38	10.94	72.9	***65.6***
7	27.125	0.26	3	18	116.59	6.48	9.44	5	9	2.79	49.71	11.82	$12.06	$21.38	11.63	77.5	***69.8***
7	27.125	0.26	3	18	116.59	6.48	9.44	5	11	3.41	61.21	13.91	$14.19	$21.38	12.25	81.7	***73.5***
7	27.125	0.26	3	18	116.59	6.48	9.44	5	13	4.03	71.82	15.99	$16.31	$21.38	12.78	85.2	***76.7***
7	27.125	0.26	3	18	116.59	6.48	9.44	6	5	2.20	35.85	9.95	$10.14	$21.38	10.82	72.1	***64.9***
7	27.125	0.26	3	18	116.59	6.48	9.44	6	7	3.08	52.71	12.95	$13.21	$21.38	11.80	78.6	***70.8***
7	27.125	0.26	3	18	116.59	6.48	9.44	6	9	3.96	68.50	15.95	$16.27	$21.38	12.62	84.1	***75.7***
7	27.125	0.26	3	18	116.59	6.48	9.44	6	11	4.84	82.88	18.96	$19.34	$21.38	13.30	88.7	***79.8***
7	27.125	0.26	3	18	116.59	6.48	9.44	6	13	5.72	96.88	21.96	$22.40	$21.38	13.92	92.8	***83.5***

White Text - inadequate temperature and shrinkage steel
Italic Text - inadequate structural capacity
Highlighted Row - good design – valid for use

1 in. = 25.4 mm
1 ft = 0.3048 m
1 kip = 4.448 kN

Table B-1 (continued). Barrier End Section Strength and Cost Calculations for All Configurations

Top Width (in)	Base Width (in)	Concrete Volume (yd^3 / ft)	Stirrups					Longitudinal Steel				Weight of Steel (lb / ft)	Cost of Steel ($ / ft)	Cost of Concrete ($ / ft)	Yield Line Calculations		
			Bar #	Spacing (in)	Length (in)	Length / ft (ft / ft)	M_C (k-ft / ft)	Bar #	Quantity	A_s (in^2)	M_w (k-ft / ft)				L_{CR} (ft)	ΦR_w (kips)	ΦR_w (kips)
7	27.125	0.26	3	24	116.59	4.86	7.13	3	5	0.55	9.24	3.71	$3.78	$21.38	9.14	46.0	***41.4***
7	27.125	0.26	3	24	116.59	4.86	7.13	3	7	0.77	13.76	4.46	$4.55	$21.38	9.61	48.3	***43.5***
7	27.125	0.26	3	24	116.59	4.86	7.13	3	9	0.99	18.29	5.21	$5.31	$21.38	10.05	50.5	***45.5***
7	27.125	0.26	3	24	116.59	4.86	7.13	3	11	1.21	22.74	5.96	$6.08	$21.38	10.45	52.6	***47.3***
7	27.125	0.26	3	24	116.59	4.86	7.13	3	13	1.43	27.15	6.71	$6.85	$21.38	10.83	54.4	***49.0***
7	27.125	0.26	3	24	116.59	4.86	7.13	4	5	1.00	16.65	5.17	$5.27	$21.38	9.90	49.8	***44.8***
7	27.125	0.26	3	24	116.59	4.86	7.13	4	7	1.40	24.76	6.50	$6.63	$21.38	10.63	53.4	***48.1***
7	27.125	0.26	3	24	116.59	4.86	7.13	4	9	1.80	32.71	7.84	$8.00	$21.38	11.27	56.7	***51.0***
7	27.125	0.26	3	24	116.59	4.86	7.13	4	11	2.20	40.53	9.17	$9.36	$21.38	11.85	59.6	***53.7***
7	27.125	0.26	3	24	116.59	4.86	7.13	4	13	2.60	48.18	10.51	$10.72	$21.38	12.38	62.3	***56.1***
7	27.125	0.26	3	24	116.59	4.86	7.13	5	5	1.55	25.56	7.04	$7.18	$21.38	10.69	53.8	***48.4***
7	27.125	0.26	3	24	116.59	4.86	7.13	5	7	2.17	37.79	9.13	$9.31	$21.38	11.65	58.6	***52.8***
7	27.125	0.26	3	24	116.59	4.86	7.13	5	9	2.79	49.71	11.21	$11.44	$21.38	12.49	62.8	***56.5***
7	27.125	0.26	3	24	116.59	4.86	7.13	5	11	3.41	61.21	13.30	$13.57	$21.38	13.22	66.5	***59.8***
7	27.125	0.26	3	24	116.59	4.86	7.13	5	13	4.03	71.82	15.39	$15.69	$21.38	13.84	69.6	***62.7***
7	27.125	0.26	3	24	116.59	4.86	7.13	6	5	2.20	35.85	9.34	$9.52	$21.38	11.51	57.9	***52.1***
7	27.125	0.26	3	24	116.59	4.86	7.13	6	7	3.08	52.71	12.34	$12.59	$21.38	12.68	63.8	***57.4***
7	27.125	0.26	3	24	116.59	4.86	7.13	6	9	3.96	68.50	15.34	$15.65	$21.38	13.65	68.7	***61.8***
7	27.125	0.26	3	24	116.59	4.86	7.13	6	11	4.84	82.88	18.35	$18.72	$21.38	14.46	72.7	***65.4***
7	27.125	0.26	3	24	116.59	4.86	7.13	6	13	5.72	96.88	21.35	$21.78	$21.38	15.19	76.4	***68.7***
7	27.125	0.26	3	30	116.59	3.89	5.70	3	5	0.55	9.24	3.34	$3.41	$21.38	9.39	37.8	***34.0***
7	27.125	0.26	3	30	116.59	3.89	5.70	3	7	0.77	13.76	4.09	$4.18	$21.38	9.95	40.0	***36.0***
7	27.125	0.26	3	30	116.59	3.89	5.70	3	9	0.99	18.29	4.85	$4.94	$21.38	10.46	42.1	***37.9***
7	27.125	0.26	3	30	116.59	3.89	5.70	3	11	1.21	22.74	5.60	$5.71	$21.38	10.93	44.0	***39.6***
7	27.125	0.26	3	30	116.59	3.89	5.70	3	13	1.43	27.15	6.35	$6.48	$21.38	11.36	45.7	***41.2***
7	27.125	0.26	3	30	116.59	3.89	5.70	4	5	1.00	16.65	4.80	$4.90	$21.38	10.28	41.4	***37.2***
7	27.125	0.26	3	30	116.59	3.89	5.70	4	7	1.40	24.76	6.14	$6.26	$21.38	11.13	44.8	***40.3***
7	27.125	0.26	3	30	116.59	3.89	5.70	4	9	1.80	32.71	7.47	$7.62	$21.38	11.88	47.8	***43.0***
7	27.125	0.26	3	30	116.59	3.89	5.70	4	11	2.20	40.53	8.81	$8.99	$21.38	12.55	50.5	***45.4***
7	27.125	0.26	3	30	116.59	3.89	5.70	4	13	2.60	48.18	10.15	$10.35	$21.38	13.16	52.9	***47.6***
7	27.125	0.26	3	30	116.59	3.89	5.70	5	5	1.55	25.56	6.68	$6.81	$21.38	11.21	45.1	***40.6***
7	27.125	0.26	3	30	116.59	3.89	5.70	5	7	2.17	37.79	8.76	$8.94	$21.38	12.32	49.6	***44.6***
7	27.125	0.26	3	30	116.59	3.89	5.70	5	9	2.79	49.71	10.85	$11.07	$21.38	13.27	53.4	***48.1***
7	27.125	0.26	3	30	116.59	3.89	5.70	5	11	3.41	61.21	12.93	$13.19	$21.38	14.11	56.8	***51.1***
7	27.125	0.26	3	30	116.59	3.89	5.70	5	13	4.03	71.82	15.02	$15.32	$21.38	14.82	59.6	***53.7***
7	27.125	0.26	3	30	116.59	3.89	5.70	6	5	2.20	35.85	8.97	$9.15	$21.38	12.15	48.9	***44.0***
7	27.125	0.26	3	30	116.59	3.89	5.70	6	7	3.08	52.71	11.98	$12.21	$21.38	13.50	54.3	***48.9***
7	27.125	0.26	3	30	116.59	3.89	5.70	6	9	3.96	68.50	14.98	$15.28	$21.38	14.61	58.8	***52.9***
7	27.125	0.26	3	30	116.59	3.89	5.70	6	11	4.84	82.88	17.98	$18.34	$21.38	15.52	62.4	***56.2***
7	27.125	0.26	3	30	116.59	3.89	5.70	6	13	5.72	96.88	20.99	$21.41	$21.38	16.35	65.8	***59.2***

White Text - inadequate temperature and shrinkage steel
Italic Text - inadequate structural capacity
Highlighted Row - good design – valid for use

1 in. = 25.4 mm
1 ft = 0.3048 m
1 kip = 4.448 kN

Table B-1 (continued). Barrier End Section Strength and Cost Calculations for All Configurations

Top Width (in)	Base Width (in)	Concrete Volume (yd^3 / ft)	Stirrups					Longitudinal Steel				Weight of Steel (lb / ft)	Cost of Steel ($ / ft)	Cost of Concrete ($ / ft)	Yield Line Calculations		
			Bar #	Spacing (in)	Length (in)	Length / ft (ft / ft)	M_C (k-ft / ft)	Bar #	Quantity	A_s (in^2)	M_w (k-ft / ft)				L_{CR} (ft)	ΦR_w (kips)	ΦR_w (kips)
7	27.125	0.26	3	36	116.59	3.24	4.75	3	5	0.55	9.24	3.10	$3.16	$21.38	9.62	32.3	***29.0***
7	27.125	0.26	3	36	116.59	3.24	4.75	3	7	0.77	13.76	3.85	$3.93	$21.38	10.27	34.4	***31.0***
7	27.125	0.26	3	36	116.59	3.24	4.75	3	9	0.99	18.29	4.60	$4.69	$21.38	10.85	36.4	***32.7***
7	27.125	0.26	3	36	116.59	3.24	4.75	3	11	1.21	22.74	5.35	$5.46	$21.38	11.38	38.1	***34.3***
7	27.125	0.26	3	36	116.59	3.24	4.75	3	13	1.43	27.15	6.11	$6.23	$21.38	11.87	39.8	***35.8***
7	27.125	0.26	3	36	116.59	3.24	4.75	4	5	1.00	16.65	4.56	$4.65	$21.38	10.64	35.7	***32.1***
7	27.125	0.26	3	36	116.59	3.24	4.75	4	7	1.40	24.76	5.89	$6.01	$21.38	11.61	38.9	***35.0***
7	27.125	0.26	3	36	116.59	3.24	4.75	4	9	1.80	32.71	7.23	$7.37	$21.38	12.44	41.7	***37.5***
7	27.125	0.26	3	36	116.59	3.24	4.75	4	11	2.20	40.53	8.57	$8.74	$21.38	13.19	44.2	***39.8***
7	27.125	0.26	3	36	116.59	3.24	4.75	4	13	2.60	48.18	9.90	$10.10	$21.38	13.87	46.5	***41.9***
7	27.125	0.26	3	36	116.59	3.24	4.75	5	5	1.55	25.56	6.43	$6.56	$21.38	11.69	39.2	***35.3***
7	27.125	0.26	3	36	116.59	3.24	4.75	5	7	2.17	37.79	8.52	$8.69	$21.38	12.94	43.4	***39.0***
7	27.125	0.26	3	36	116.59	3.24	4.75	5	9	2.79	49.71	10.60	$10.82	$21.38	14.00	46.9	***42.2***
7	27.125	0.26	3	36	116.59	3.24	4.75	5	11	3.41	61.21	12.69	$12.94	$21.38	14.93	50.1	***45.1***
7	27.125	0.26	3	36	116.59	3.24	4.75	5	13	4.03	71.82	14.78	$15.07	$21.38	15.72	52.7	***47.4***
7	27.125	0.26	3	36	116.59	3.24	4.75	6	5	2.20	35.85	8.73	$8.90	$21.38	12.75	42.8	***38.5***
7	27.125	0.26	3	36	116.59	3.24	4.75	6	7	3.08	52.71	11.73	$11.97	$21.38	14.25	47.8	***43.0***
7	27.125	0.26	3	36	116.59	3.24	4.75	6	9	3.96	68.50	14.74	$15.03	$21.38	15.48	51.9	***46.7***
7	27.125	0.26	3	36	116.59	3.24	4.75	6	11	4.84	82.88	17.74	$18.09	$21.38	16.49	55.3	***49.8***
7	27.125	0.26	3	36	116.59	3.24	4.75	6	13	5.72	96.88	20.74	$21.16	$21.38	17.41	58.4	***52.5***
7	27.125	0.26	4	12	117.66	9.80	25.42	3	5	0.55	9.24	8.43	$8.60	$21.38	8.35	149.8	***134.8***
7	27.125	0.26	4	12	117.66	9.80	25.42	3	7	0.77	13.76	9.18	$9.37	$21.38	8.51	152.7	***137.4***
7	27.125	0.26	4	12	117.66	9.80	25.42	3	9	0.99	18.29	9.93	$10.13	$21.38	8.67	155.5	***139.9***
7	27.125	0.26	4	12	117.66	9.80	25.42	3	11	1.21	22.74	10.69	$10.90	$21.38	8.81	158.1	***142.3***
7	27.125	0.26	4	12	117.66	9.80	25.42	3	13	1.43	27.15	11.44	$11.67	$21.38	8.96	160.7	***144.6***
7	27.125	0.26	4	12	117.66	9.80	25.42	4	5	1.00	16.65	9.89	$10.09	$21.38	8.61	154.5	***139.0***
7	27.125	0.26	4	12	117.66	9.80	25.42	4	7	1.40	24.76	11.23	$11.45	$21.38	8.88	159.3	***143.4***
7	27.125	0.26	4	12	117.66	9.80	25.42	4	9	1.80	32.71	12.56	$12.81	$21.38	9.13	163.8	***147.4***
7	27.125	0.26	4	12	117.66	9.80	25.42	4	11	2.20	40.53	13.90	$14.18	$21.38	9.37	168.0	***151.2***
7	27.125	0.26	4	12	117.66	9.80	25.42	4	13	2.60	48.18	15.23	$15.54	$21.38	9.59	172.0	***154.8***
7	27.125	0.26	4	12	117.66	9.80	25.42	5	5	1.55	25.56	11.76	$12.00	$21.38	8.91	159.8	***143.8***
7	27.125	0.26	4	12	117.66	9.80	25.42	5	7	2.17	37.79	13.85	$14.13	$21.38	9.29	166.6	***149.9***
7	27.125	0.26	4	12	117.66	9.80	25.42	5	9	2.79	49.71	15.94	$16.26	$21.38	9.63	172.8	***155.5***
7	27.125	0.26	4	12	117.66	9.80	25.42	5	11	3.41	61.21	18.02	$18.38	$21.38	9.94	178.4	***160.6***
7	27.125	0.26	4	12	117.66	9.80	25.42	5	13	4.03	71.82	20.11	$20.51	$21.38	10.22	183.4	***165.0***
7	27.125	0.26	4	12	117.66	9.80	25.42	6	5	2.20	35.85	14.06	$14.34	$21.38	9.23	165.5	***149.0***
7	27.125	0.26	4	12	117.66	9.80	25.42	6	7	3.08	52.71	17.06	$17.40	$21.38	9.71	174.3	***156.8***
7	27.125	0.26	4	12	117.66	9.80	25.42	6	9	3.96	68.50	20.07	$20.47	$21.38	10.13	181.8	***163.6***
7	27.125	0.26	4	12	117.66	9.80	25.42	6	11	4.84	82.88	23.07	$23.53	$21.38	10.49	188.3	***169.5***
7	27.125	0.26	4	12	117.66	9.80	25.42	6	13	5.72	96.88	26.08	$26.60	$21.38	10.83	194.2	***174.8***

White Text - inadequate temperature and shrinkage steel
Italic Text - inadequate structural capacity
Highlighted Row - good design – valid for use

1 in. = 25.4 mm
1 ft = 0.3048 m
1 kip = 4.448 kN

Table B-1 (continued). Barrier End Section Strength and Cost Calculations for All Configurations

Top Width (in)	Base Width (in)	Concrete Volume (yd^3 / ft)	Stirrups					Longitudinal Steel				Weight of Steel (lb / ft)	Cost of Steel ($ / ft)	Cost of Concrete ($ / ft)	Yield Line Calculations		
			Bar #	Spacing (in)	Length (in)	Length / ft (ft / ft)	M_C (k-ft / ft)	Bar #	Quantity	A_s (in^2)	M_w (k-ft / ft)				L_{CR} (ft)	ΦR_w (kips)	ΦR_w (kips)
7	27.125	0.26	4	18	117.66	6.54	17.06	3	5	0.55	9.24	6.25	$6.37	$21.38	8.51	102.5	***92.2***
7	27.125	0.26	4	18	117.66	6.54	17.06	3	7	0.77	13.76	7.00	$7.14	$21.38	8.74	105.2	***94.7***
7	27.125	0.26	4	18	117.66	6.54	17.06	3	9	0.99	18.29	7.75	$7.91	$21.38	8.96	107.9	***97.1***
7	27.125	0.26	4	18	117.66	6.54	17.06	3	11	1.21	22.74	8.50	$8.67	$21.38	9.17	110.4	***99.3***
7	27.125	0.26	4	18	117.66	6.54	17.06	3	13	1.43	27.15	9.25	$9.44	$21.38	9.36	112.7	***101.5***
7	27.125	0.26	4	18	117.66	6.54	17.06	4	5	1.00	16.65	7.71	$7.86	$21.38	8.88	106.9	***96.2***
7	27.125	0.26	4	18	117.66	6.54	17.06	4	7	1.40	24.76	9.04	$9.22	$21.38	9.26	111.5	***100.3***
7	27.125	0.26	4	18	117.66	6.54	17.06	4	9	1.80	32.71	10.38	$10.59	$21.38	9.60	115.6	***104.1***
7	27.125	0.26	4	18	117.66	6.54	17.06	4	11	2.20	40.53	11.71	$11.95	$21.38	9.92	119.5	***107.5***
7	27.125	0.26	4	18	117.66	6.54	17.06	4	13	2.60	48.18	13.05	$13.31	$21.38	10.22	123.0	***110.7***
7	27.125	0.26	4	18	117.66	6.54	17.06	5	5	1.55	25.56	9.58	$9.77	$21.38	9.29	111.9	***100.7***
7	27.125	0.26	4	18	117.66	6.54	17.06	5	7	2.17	37.79	11.67	$11.90	$21.38	9.81	118.1	***106.3***
7	27.125	0.26	4	18	117.66	6.54	17.06	5	9	2.79	49.71	13.75	$14.03	$21.38	10.28	123.7	***111.4***
7	27.125	0.26	4	18	117.66	6.54	17.06	5	11	3.41	61.21	15.84	$16.16	$21.38	10.69	128.7	***115.9***
7	27.125	0.26	4	18	117.66	6.54	17.06	5	13	4.03	71.82	17.93	$18.28	$21.38	11.06	133.1	***119.8***
7	27.125	0.26	4	18	117.66	6.54	17.06	6	5	2.20	35.85	11.88	$12.11	$21.38	9.73	117.2	***105.5***
7	27.125	0.26	4	18	117.66	6.54	17.06	6	7	3.08	52.71	14.88	$15.18	$21.38	10.39	125.1	***112.6***
7	27.125	0.26	4	18	117.66	6.54	17.06	6	9	3.96	68.50	17.88	$18.24	$21.38	10.95	131.8	***118.6***
7	27.125	0.26	4	18	117.66	6.54	17.06	6	11	4.84	82.88	20.89	$21.31	$21.38	11.42	137.5	***123.7***
7	27.125	0.26	4	18	117.66	6.54	17.06	6	13	5.72	96.88	23.89	$24.37	$21.38	11.85	142.6	***128.4***
7	27.125	0.26	4	24	117.66	4.90	12.83	3	5	0.55	9.24	5.15	$5.26	$21.38	8.67	78.5	***70.7***
7	27.125	0.26	4	24	117.66	4.90	12.83	3	7	0.77	13.76	5.91	$6.02	$21.38	8.96	81.2	***73.1***
7	27.125	0.26	4	24	117.66	4.90	12.83	3	9	0.99	18.29	6.66	$6.79	$21.38	9.24	83.7	***75.3***
7	27.125	0.26	4	24	117.66	4.90	12.83	3	11	1.21	22.74	7.41	$7.56	$21.38	9.50	86.0	***77.4***
7	27.125	0.26	4	24	117.66	4.90	12.83	3	13	1.43	27.15	8.16	$8.33	$21.38	9.74	88.3	***79.4***
7	27.125	0.26	4	24	117.66	4.90	12.83	4	5	1.00	16.65	6.61	$6.75	$21.38	9.14	82.8	***74.5***
7	27.125	0.26	4	24	117.66	4.90	12.83	4	7	1.40	24.76	7.95	$8.11	$21.38	9.61	87.1	***78.4***
7	27.125	0.26	4	24	117.66	4.90	12.83	4	9	1.80	32.71	9.29	$9.47	$21.38	10.04	90.9	***81.8***
7	27.125	0.26	4	24	117.66	4.90	12.83	4	11	2.20	40.53	10.62	$10.84	$21.38	10.43	94.5	***85.0***
7	27.125	0.26	4	24	117.66	4.90	12.83	4	13	2.60	48.18	11.96	$12.20	$21.38	10.79	97.8	***88.0***
7	27.125	0.26	4	24	117.66	4.90	12.83	5	5	1.55	25.56	8.49	$8.66	$21.38	9.66	87.5	***78.7***
7	27.125	0.26	4	24	117.66	4.90	12.83	5	7	2.17	37.79	10.58	$10.79	$21.38	10.30	93.3	***83.9***
7	27.125	0.26	4	24	117.66	4.90	12.83	5	9	2.79	49.71	12.66	$12.91	$21.38	10.86	98.4	***88.6***
7	27.125	0.26	4	24	117.66	4.90	12.83	5	11	3.41	61.21	14.75	$15.04	$21.38	11.37	103.0	***92.7***
7	27.125	0.26	4	24	117.66	4.90	12.83	5	13	4.03	71.82	16.83	$17.17	$21.38	11.81	106.9	***96.3***
7	27.125	0.26	4	24	117.66	4.90	12.83	6	5	2.20	35.85	10.78	$11.00	$21.38	10.20	92.4	***83.2***
7	27.125	0.26	4	24	117.66	4.90	12.83	6	7	3.08	52.71	13.79	$14.06	$21.38	11.00	99.6	***89.7***
7	27.125	0.26	4	24	117.66	4.90	12.83	6	9	3.96	68.50	16.79	$17.13	$21.38	11.67	105.7	***95.2***
7	27.125	0.26	4	24	117.66	4.90	12.83	6	11	4.84	82.88	19.80	$20.19	$21.38	12.24	110.9	***99.8***
7	27.125	0.26	4	24	117.66	4.90	12.83	6	13	5.72	96.88	22.80	$23.26	$21.38	12.75	115.5	***104.0***

White Text - inadequate temperature and shrinkage steel
Italic Text - inadequate structural capacity
Highlighted Row - good design – valid for use

1 in. = 25.4 mm
1 ft = 0.3048 m
1 kip = 4.448 kN

Table B-1 (continued). Barrier End Section Strength and Cost Calculations for All Configurations

Top Width (in)	Base Width (in)	Concrete Volume (yd^3 / ft)	Stirrups					Longitudinal Steel				Weight of Steel (lb / ft)	Cost of Steel ($ / ft)	Cost of Concrete ($ / ft)	Yield Line Calculations		
			Bar #	Spacing (in)	Length (in)	Length / ft (ft / ft)	M_C (k-ft / ft)	Bar #	Quantity	A_s (in^2)	M_w (k-ft / ft)				L_{CR} (ft)	ΦR_w (kips)	ΦR_w (kips)
7	27.125	0.26	4	30	117.66	3.92	10.30	3	5	0.55	9.24	4.50	$4.59	$21.38	8.82	64.1	***57.7***
7	27.125	0.26	4	30	117.66	3.92	10.30	3	7	0.77	13.76	5.25	$5.36	$21.38	9.17	66.7	***60.0***
7	27.125	0.26	4	30	117.66	3.92	10.30	3	9	0.99	18.29	6.00	$6.12	$21.38	9.50	69.1	***62.2***
7	27.125	0.26	4	30	117.66	3.92	10.30	3	11	1.21	22.74	6.76	$6.89	$21.38	9.81	71.3	***64.2***
7	27.125	0.26	4	30	117.66	3.92	10.30	3	13	1.43	27.15	7.51	$7.66	$21.38	10.10	73.4	***66.1***
7	27.125	0.26	4	30	117.66	3.92	10.30	4	5	1.00	16.65	5.96	$6.08	$21.38	9.38	68.2	***61.4***
7	27.125	0.26	4	30	117.66	3.92	10.30	4	7	1.40	24.76	7.30	$7.44	$21.38	9.94	72.3	***65.1***
7	27.125	0.26	4	30	117.66	3.92	10.30	4	9	1.80	32.71	8.63	$8.80	$21.38	10.44	75.9	***68.3***
7	27.125	0.26	4	30	117.66	3.92	10.30	4	11	2.20	40.53	9.97	$10.17	$21.38	10.90	79.2	***71.3***
7	27.125	0.26	4	30	117.66	3.92	10.30	4	13	2.60	48.18	11.30	$11.53	$21.38	11.32	82.3	***74.1***
7	27.125	0.26	4	30	117.66	3.92	10.30	5	5	1.55	25.56	7.83	$7.99	$21.38	9.99	72.7	***65.4***
7	27.125	0.26	4	30	117.66	3.92	10.30	5	7	2.17	37.79	9.92	$10.12	$21.38	10.74	78.1	***70.3***
7	27.125	0.26	4	30	117.66	3.92	10.30	5	9	2.79	49.71	12.01	$12.25	$21.38	11.40	82.9	***74.6***
7	27.125	0.26	4	30	117.66	3.92	10.30	5	11	3.41	61.21	14.09	$14.37	$21.38	11.98	87.1	***78.4***
7	27.125	0.26	4	30	117.66	3.92	10.30	5	13	4.03	71.82	16.18	$16.50	$21.38	12.48	90.8	***81.7***
7	27.125	0.26	4	30	117.66	3.92	10.30	6	5	2.20	35.85	10.13	$10.33	$21.38	10.63	77.3	***69.6***
7	27.125	0.26	4	30	117.66	3.92	10.30	6	7	3.08	52.71	13.13	$13.40	$21.38	11.56	84.0	***75.6***
7	27.125	0.26	4	30	117.66	3.92	10.30	6	9	3.96	68.50	16.14	$16.46	$21.38	12.33	89.6	***80.7***
7	27.125	0.26	4	30	117.66	3.92	10.30	6	11	4.84	82.88	19.14	$19.52	$21.38	12.98	94.4	***84.9***
7	27.125	0.26	4	30	117.66	3.92	10.30	6	13	5.72	96.88	22.15	$22.59	$21.38	13.57	98.6	***88.8***
7	27.125	0.26	4	36	117.66	3.27	8.61	3	5	0.55	9.24	4.06	$4.14	$21.38	8.96	54.5	***49.0***
7	27.125	0.26	4	36	117.66	3.27	8.61	3	7	0.77	13.76	4.82	$4.91	$21.38	9.37	57.0	***51.3***
7	27.125	0.26	4	36	117.66	3.27	8.61	3	9	0.99	18.29	5.57	$5.68	$21.38	9.75	59.3	***53.3***
7	27.125	0.26	4	36	117.66	3.27	8.61	3	11	1.21	22.74	6.32	$6.45	$21.38	10.10	61.4	***55.2***
7	27.125	0.26	4	36	117.66	3.27	8.61	3	13	1.43	27.15	7.07	$7.21	$21.38	10.43	63.4	***57.0***
7	27.125	0.26	4	36	117.66	3.27	8.61	4	5	1.00	16.65	5.52	$5.63	$21.38	9.61	58.4	***52.6***
7	27.125	0.26	4	36	117.66	3.27	8.61	4	7	1.40	24.76	6.86	$7.00	$21.38	10.25	62.3	***56.1***
7	27.125	0.26	4	36	117.66	3.27	8.61	4	9	1.80	32.71	8.20	$8.36	$21.38	10.82	65.8	***59.2***
7	27.125	0.26	4	36	117.66	3.27	8.61	4	11	2.20	40.53	9.53	$9.72	$21.38	11.33	68.9	***62.0***
7	27.125	0.26	4	36	117.66	3.27	8.61	4	13	2.60	48.18	10.87	$11.08	$21.38	11.80	71.8	***64.6***
7	27.125	0.26	4	36	117.66	3.27	8.61	5	5	1.55	25.56	7.40	$7.55	$21.38	10.31	62.7	***56.4***
7	27.125	0.26	4	36	117.66	3.27	8.61	5	7	2.17	37.79	9.48	$9.67	$21.38	11.16	67.8	***61.0***
7	27.125	0.26	4	36	117.66	3.27	8.61	5	9	2.79	49.71	11.57	$11.80	$21.38	11.90	72.3	***65.1***
7	27.125	0.26	4	36	117.66	3.27	8.61	5	11	3.41	61.21	13.66	$13.93	$21.38	12.55	76.3	***68.6***
7	27.125	0.26	4	36	117.66	3.27	8.61	5	13	4.03	71.82	15.74	$16.06	$21.38	13.11	79.7	***71.7***
7	27.125	0.26	4	36	117.66	3.27	8.61	6	5	2.20	35.85	9.69	$9.89	$21.38	11.03	67.0	***60.3***
7	27.125	0.26	4	36	117.66	3.27	8.61	6	7	3.08	52.71	12.70	$12.95	$21.38	12.07	73.4	***66.0***
7	27.125	0.26	4	36	117.66	3.27	8.61	6	9	3.96	68.50	15.70	$16.02	$21.38	12.94	78.6	***70.8***
7	27.125	0.26	4	36	117.66	3.27	8.61	6	11	4.84	82.88	18.71	$19.08	$21.38	13.66	83.0	***74.7***
7	27.125	0.26	4	36	117.66	3.27	8.61	6	13	5.72	96.88	21.71	$22.14	$21.38	14.31	87.0	***78.3***

White Text - inadequate temperature and shrinkage steel
Italic Text - inadequate structural capacity
Highlighted Row - good design – valid for use

1 in. = 25.4 mm
1 ft = 0.3048 m
1 kip = 4.448 kN

Table B-1 (continued). Barrier End Section Strength and Cost Calculations for All Configurations

Top Width (in)	Base Width (in)	Concrete Volume (yd^3 / ft)	Stirrups					Longitudinal Steel				Weight of Steel (lb / ft)	Cost of Steel ($ / ft)	Cost of Concrete ($ / ft)	Yield Line Calculations		
			Bar #	Spacing (in)	Length (in)	Length / ft (ft / ft)	M_C (k-ft / ft)	Bar #	Quantity	A_s (in^2)	M_w (k-ft / ft)				L_{CR} (ft)	ΦR_w (kips)	ΦR_w (kips)
7	27.125	0.26	5	12	118.35	9.86	38.92	3	5	0.55	9.24	12.17	$12.41	$21.38	8.23	226.1	***203.5***
7	27.125	0.26	5	12	118.35	9.86	38.92	3	7	0.77	13.76	12.92	$13.18	$21.38	8.34	229.1	***206.2***
7	27.125	0.26	5	12	118.35	9.86	38.92	3	9	0.99	18.29	13.67	$13.94	$21.38	8.45	232.0	***208.8***
7	27.125	0.26	5	12	118.35	9.86	38.92	3	11	1.21	22.74	14.42	$14.71	$21.38	8.55	234.8	***211.4***
7	27.125	0.26	5	12	118.35	9.86	38.92	3	13	1.43	27.15	15.17	$15.48	$21.38	8.65	237.6	***213.8***
7	27.125	0.26	5	12	118.35	9.86	38.92	4	5	1.00	16.65	13.63	$13.90	$21.38	8.41	231.0	***207.9***
7	27.125	0.26	5	12	118.35	9.86	38.92	4	7	1.40	24.76	14.96	$15.26	$21.38	8.59	236.1	***212.5***
7	27.125	0.26	5	12	118.35	9.86	38.92	4	9	1.80	32.71	16.30	$16.62	$21.38	8.77	240.9	216.8
7	27.125	0.26	5	12	118.35	9.86	38.92	4	11	2.20	40.53	17.63	$17.99	$21.38	8.94	245.5	220.9
7	27.125	0.26	5	12	118.35	9.86	38.92	4	13	2.60	48.18	18.97	$19.35	$21.38	9.09	249.8	224.8
7	27.125	0.26	5	12	118.35	9.86	38.92	5	5	1.55	25.56	15.50	$15.81	$21.38	8.61	236.6	***212.9***
7	27.125	0.26	5	12	118.35	9.86	38.92	5	7	2.17	37.79	17.59	$17.94	$21.38	8.88	243.9	219.5
7	27.125	0.26	5	12	118.35	9.86	38.92	5	9	2.79	49.71	19.67	$20.07	$21.38	9.12	250.6	225.6
7	27.125	0.26	5	12	118.35	9.86	38.92	5	11	3.41	61.21	21.76	$22.19	$21.38	9.35	256.9	231.2
7	27.125	0.26	5	12	118.35	9.86	38.92	5	13	4.03	71.82	23.85	$24.32	$21.38	9.55	262.4	236.1
7	27.125	0.26	5	12	118.35	9.86	38.92	6	5	2.20	35.85	17.80	$18.15	$21.38	8.84	242.8	218.5
7	27.125	0.26	5	12	118.35	9.86	38.92	6	7	3.08	52.71	20.80	$21.22	$21.38	9.18	252.3	227.1
7	27.125	0.26	5	12	118.35	9.86	38.92	6	9	3.96	68.50	23.80	$24.28	$21.38	9.49	260.7	234.6
7	27.125	0.26	5	12	118.35	9.86	38.92	6	11	4.84	82.88	26.81	$27.34	$21.38	9.75	267.9	241.1
7	27.125	0.26	5	12	118.35	9.86	38.92	6	13	5.72	96.88	29.81	$30.41	$21.38	10.00	274.7	247.2
7	27.125	0.26	5	18	118.35	6.58	26.22	3	5	0.55	9.24	8.74	$8.91	$21.38	8.34	154.4	***138.9***
7	27.125	0.26	5	18	118.35	6.58	26.22	3	7	0.77	13.76	9.49	$9.68	$21.38	8.50	157.3	***141.5***
7	27.125	0.26	5	18	118.35	6.58	26.22	3	9	0.99	18.29	10.24	$10.45	$21.38	8.65	160.1	***144.1***
7	27.125	0.26	5	18	118.35	6.58	26.22	3	11	1.21	22.74	10.99	$11.21	$21.38	8.79	162.7	***146.5***
7	27.125	0.26	5	18	118.35	6.58	26.22	3	13	1.43	27.15	11.75	$11.98	$21.38	8.93	165.3	***148.8***
7	27.125	0.26	5	18	118.35	6.58	26.22	4	5	1.00	16.65	10.20	$10.40	$21.38	8.59	159.1	***143.2***
7	27.125	0.26	5	18	118.35	6.58	26.22	4	7	1.40	24.76	11.53	$11.76	$21.38	8.86	163.9	***147.5***
7	27.125	0.26	5	18	118.35	6.58	26.22	4	9	1.80	32.71	12.87	$13.13	$21.38	9.10	168.4	***151.6***
7	27.125	0.26	5	18	118.35	6.58	26.22	4	11	2.20	40.53	14.21	$14.49	$21.38	9.33	172.7	***155.4***
7	27.125	0.26	5	18	118.35	6.58	26.22	4	13	2.60	48.18	15.54	$15.85	$21.38	9.55	176.7	***159.0***
7	27.125	0.26	5	18	118.35	6.58	26.22	5	5	1.55	25.56	12.07	$12.31	$21.38	8.88	164.4	***147.9***
7	27.125	0.26	5	18	118.35	6.58	26.22	5	7	2.17	37.79	14.16	$14.44	$21.38	9.25	171.2	***154.1***
7	27.125	0.26	5	18	118.35	6.58	26.22	5	9	2.79	49.71	16.24	$16.57	$21.38	9.59	177.5	***159.7***
7	27.125	0.26	5	18	118.35	6.58	26.22	5	11	3.41	61.21	18.33	$18.70	$21.38	9.89	183.1	***164.8***
7	27.125	0.26	5	18	118.35	6.58	26.22	5	13	4.03	71.82	20.42	$20.83	$21.38	10.16	188.1	***169.3***
7	27.125	0.26	5	18	118.35	6.58	26.22	6	5	2.20	35.85	14.37	$14.66	$21.38	9.19	170.2	***153.2***
7	27.125	0.26	5	18	118.35	6.58	26.22	6	7	3.08	52.71	17.37	$17.72	$21.38	9.67	179.0	***161.1***
7	27.125	0.26	5	18	118.35	6.58	26.22	6	9	3.96	68.50	20.38	$20.78	$21.38	10.08	186.6	***167.9***
7	27.125	0.26	5	18	118.35	6.58	26.22	6	11	4.84	82.88	23.38	$23.85	$21.38	10.43	193.1	***173.8***
7	27.125	0.26	5	18	118.35	6.58	26.22	6	13	5.72	96.88	26.38	$26.91	$21.38	10.76	199.1	***179.2***

White Text - inadequate temperature and shrinkage steel
Italic Text - inadequate structural capacity
Highlighted Row - good design – valid for use

1 in. = 25.4 mm
1 ft = 0.3048 m
1 kip = 4.448 kN

Table B-1 (continued). Barrier End Section Strength and Cost Calculations for All Configurations

Top Width (in)	Base Width (in)	Concrete Volume (yd^3 / ft)	Stirrups					Longitudinal Steel				Weight of Steel (lb / ft)	Cost of Steel ($ / ft)	Cost of Concrete ($ / ft)	Yield Line Calculations		
			Bar #	Spacing (in)	Length (in)	Length / ft (ft / ft)	M_C (k-ft / ft)	Bar #	Quantity	A_s (in^2)	M_w (k-ft / ft)				L_{CR} (ft)	ΦR_w (kips)	ΦR_w (kips)
7	27.125	0.26	5	24	118.35	4.93	19.79	3	5	0.55	9.24	7.02	$7.16	$21.38	8.44	118.0	***106.2***
7	27.125	0.26	5	24	118.35	4.93	19.79	3	7	0.77	13.76	7.78	$7.93	$21.38	8.65	120.8	***108.7***
7	27.125	0.26	5	24	118.35	4.93	19.79	3	9	0.99	18.29	8.53	$8.70	$21.38	8.84	123.5	***111.1***
7	27.125	0.26	5	24	118.35	4.93	19.79	3	11	1.21	22.74	9.28	$9.46	$21.38	9.02	126.0	***113.4***
7	27.125	0.26	5	24	118.35	4.93	19.79	3	13	1.43	27.15	10.03	$10.23	$21.38	9.20	128.5	***115.6***
7	27.125	0.26	5	24	118.35	4.93	19.79	4	5	1.00	16.65	8.48	$8.65	$21.38	8.77	122.5	***110.3***
7	27.125	0.26	5	24	118.35	4.93	19.79	4	7	1.40	24.76	9.82	$10.02	$21.38	9.10	127.2	***114.5***
7	27.125	0.26	5	24	118.35	4.93	19.79	4	9	1.80	32.71	11.16	$11.38	$21.38	9.41	131.5	***118.3***
7	27.125	0.26	5	24	118.35	4.93	19.79	4	11	2.20	40.53	12.49	$12.74	$21.38	9.70	135.5	***121.9***
7	27.125	0.26	5	24	118.35	4.93	19.79	4	13	2.60	48.18	13.83	$14.10	$21.38	9.96	139.2	***125.3***
7	27.125	0.26	5	24	118.35	4.93	19.79	5	5	1.55	25.56	10.36	$10.57	$21.38	9.13	127.6	***114.9***
7	27.125	0.26	5	24	118.35	4.93	19.79	5	7	2.17	37.79	12.44	$12.69	$21.38	9.60	134.1	***120.7***
7	27.125	0.26	5	24	118.35	4.93	19.79	5	9	2.79	49.71	14.53	$14.82	$21.38	10.01	139.9	***125.9***
7	27.125	0.26	5	24	118.35	4.93	19.79	5	11	3.41	61.21	16.62	$16.95	$21.38	10.39	145.1	***130.6***
7	27.125	0.26	5	24	118.35	4.93	19.79	5	13	4.03	71.82	18.70	$19.08	$21.38	10.72	149.7	***134.8***
7	27.125	0.26	5	24	118.35	4.93	19.79	6	5	2.20	35.85	12.65	$12.91	$21.38	9.53	133.1	***119.8***
7	27.125	0.26	5	24	118.35	4.93	19.79	6	7	3.08	52.71	15.66	$15.97	$21.38	10.11	141.3	***127.2***
7	27.125	0.26	5	24	118.35	4.93	19.79	6	9	3.96	68.50	18.66	$19.03	$21.38	10.62	148.3	***133.5***
7	27.125	0.26	5	24	118.35	4.93	19.79	6	11	4.84	82.88	21.67	$22.10	$21.38	11.04	154.3	***138.9***
7	27.125	0.26	5	24	118.35	4.93	19.79	6	13	5.72	96.88	24.67	$25.16	$21.38	11.44	159.8	***143.8***
7	27.125	0.26	5	30	118.35	3.95	15.90	3	5	0.55	9.24	5.99	$6.11	$21.38	8.55	95.9	***86.3***
7	27.125	0.26	5	30	118.35	3.95	15.90	3	7	0.77	13.76	6.75	$6.88	$21.38	8.79	98.7	***88.8***
7	27.125	0.26	5	30	118.35	3.95	15.90	3	9	0.99	18.29	7.50	$7.65	$21.38	9.02	101.3	***91.1***
7	27.125	0.26	5	30	118.35	3.95	15.90	3	11	1.21	22.74	8.25	$8.42	$21.38	9.24	103.7	***93.4***
7	27.125	0.26	5	30	118.35	3.95	15.90	3	13	1.43	27.15	9.00	$9.18	$21.38	9.45	106.1	***95.5***
7	27.125	0.26	5	30	118.35	3.95	15.90	4	5	1.00	16.65	7.45	$7.60	$21.38	8.94	100.3	***90.3***
7	27.125	0.26	5	30	118.35	3.95	15.90	4	7	1.40	24.76	8.79	$8.97	$21.38	9.34	104.8	***94.3***
7	27.125	0.26	5	30	118.35	3.95	15.90	4	9	1.80	32.71	10.13	$10.33	$21.38	9.70	108.9	***98.0***
7	27.125	0.26	5	30	118.35	3.95	15.90	4	11	2.20	40.53	11.46	$11.69	$21.38	10.04	112.7	***101.4***
7	27.125	0.26	5	30	118.35	3.95	15.90	4	13	2.60	48.18	12.80	$13.05	$21.38	10.35	116.2	***104.5***
7	27.125	0.26	5	30	118.35	3.95	15.90	5	5	1.55	25.56	9.33	$9.52	$21.38	9.38	105.2	***94.7***
7	27.125	0.26	5	30	118.35	3.95	15.90	5	7	2.17	37.79	11.42	$11.64	$21.38	9.92	111.4	***100.2***
7	27.125	0.26	5	30	118.35	3.95	15.90	5	9	2.79	49.71	13.50	$13.77	$21.38	10.41	116.8	***105.2***
7	27.125	0.26	5	30	118.35	3.95	15.90	5	11	3.41	61.21	15.59	$15.90	$21.38	10.85	121.8	***109.6***
7	27.125	0.26	5	30	118.35	3.95	15.90	5	13	4.03	71.82	17.67	$18.03	$21.38	11.23	126.0	***113.4***
7	27.125	0.26	5	30	118.35	3.95	15.90	6	5	2.20	35.85	11.62	$11.86	$21.38	9.84	110.4	***99.4***
7	27.125	0.26	5	30	118.35	3.95	15.90	6	7	3.08	52.71	14.63	$14.92	$21.38	10.53	118.2	***106.3***
7	27.125	0.26	5	30	118.35	3.95	15.90	6	9	3.96	68.50	17.63	$17.99	$21.38	11.11	124.7	***112.2***
7	27.125	0.26	5	30	118.35	3.95	15.90	6	11	4.84	82.88	20.64	$21.05	$21.38	11.61	130.3	***117.2***
7	27.125	0.26	5	30	118.35	3.95	15.90	6	13	5.72	96.88	23.64	$24.11	$21.38	12.06	135.3	***121.8***

White Text - inadequate temperature and shrinkage steel
Italic Text - inadequate structural capacity
Highlighted Row - good design – valid for use

1 in. = 25.4 mm
1 ft = 0.3048 m
1 kip = 4.448 kN

Table B-1 (continued). Barrier End Section Strength and Cost Calculations for All Configurations

Top Width (in)	Base Width (in)	Concrete Volume (yd^3 / ft)	Stirrups					Longitudinal Steel				Weight of Steel (lb / ft)	Cost of Steel ($ / ft)	Cost of Concrete ($ / ft)	Yield Line Calculations		
			Bar #	Spacing (in)	Length (in)	Length / ft (ft / ft)	M_C (k-ft / ft)	Bar #	Quantity	A_s (in^2)	M_w (k-ft / ft)				L_{CR} (ft)	ΦR_w (kips)	ΦR_w (kips)
7	27.125	0.26	5	36	118.35	3.29	13.28	3	5	0.55	9.24	5.31	$5.42	$21.38	8.65	81.0	***72.9***
7	27.125	0.26	5	36	118.35	3.29	13.28	3	7	0.77	13.76	6.06	$6.18	$21.38	8.93	83.7	***75.3***
7	27.125	0.26	5	36	118.35	3.29	13.28	3	9	0.99	18.29	6.81	$6.95	$21.38	9.20	86.2	***77.6***
7	27.125	0.26	5	36	118.35	3.29	13.28	3	11	1.21	22.74	7.56	$7.72	$21.38	9.45	88.6	***79.7***
7	27.125	0.26	5	36	118.35	3.29	13.28	3	13	1.43	27.15	8.32	$8.48	$21.38	9.69	90.9	***81.8***
7	27.125	0.26	5	36	118.35	3.29	13.28	4	5	1.00	16.65	6.77	$6.90	$21.38	9.11	85.3	***76.8***
7	27.125	0.26	5	36	118.35	3.29	13.28	4	7	1.40	24.76	8.10	$8.27	$21.38	9.57	89.7	***80.7***
7	27.125	0.26	5	36	118.35	3.29	13.28	4	9	1.80	32.71	9.44	$9.63	$21.38	9.98	93.5	***84.2***
7	27.125	0.26	5	36	118.35	3.29	13.28	4	11	2.20	40.53	10.78	$10.99	$21.38	10.36	97.1	***87.4***
7	27.125	0.26	5	36	118.35	3.29	13.28	4	13	2.60	48.18	12.11	$12.36	$21.38	10.72	100.5	***90.4***
7	27.125	0.26	5	36	118.35	3.29	13.28	5	5	1.55	25.56	8.64	$8.82	$21.38	9.61	90.1	***81.0***
7	27.125	0.26	5	36	118.35	3.29	13.28	5	7	2.17	37.79	10.73	$10.94	$21.38	10.23	95.9	***86.3***
7	27.125	0.26	5	36	118.35	3.29	13.28	5	9	2.79	49.71	12.82	$13.07	$21.38	10.79	101.1	***91.0***
7	27.125	0.26	5	36	118.35	3.29	13.28	5	11	3.41	61.21	14.90	$15.20	$21.38	11.28	105.7	***95.2***
7	27.125	0.26	5	36	118.35	3.29	13.28	5	13	4.03	71.82	16.99	$17.33	$21.38	11.71	109.7	***98.8***
7	27.125	0.26	5	36	118.35	3.29	13.28	6	5	2.20	35.85	10.94	$11.16	$21.38	10.14	95.0	***85.5***
7	27.125	0.26	5	36	118.35	3.29	13.28	6	7	3.08	52.71	13.94	$14.22	$21.38	10.92	102.3	***92.1***
7	27.125	0.26	5	36	118.35	3.29	13.28	6	9	3.96	68.50	16.95	$17.29	$21.38	11.58	108.5	***97.7***
7	27.125	0.26	5	36	118.35	3.29	13.28	6	11	4.84	82.88	19.95	$20.35	$21.38	12.13	113.7	***102.3***
7	27.125	0.26	5	36	118.35	3.29	13.28	6	13	5.72	96.88	22.95	$23.41	$21.38	12.64	118.4	***106.6***
7	27.125	0.26	6	12	134.24	11.19	54.33	3	5	0.55	9.24	18.68	$19.06	$21.38	8.17	313.2	281.9
7	27.125	0.26	6	12	134.24	11.19	54.33	3	7	0.77	13.76	19.43	$19.82	$21.38	8.25	316.3	284.7
7	27.125	0.26	6	12	134.24	11.19	54.33	3	9	0.99	18.29	20.19	$20.59	$21.38	8.32	319.3	287.3
7	27.125	0.26	6	12	134.24	11.19	54.33	3	11	1.21	22.74	20.94	$21.36	$21.38	8.40	322.2	289.9
7	27.125	0.26	6	12	134.24	11.19	54.33	3	13	1.43	27.15	21.69	$22.12	$21.38	8.47	325.0	292.5
7	27.125	0.26	6	12	134.24	11.19	54.33	4	5	1.00	16.65	20.14	$20.55	$21.38	8.30	318.2	286.4
7	27.125	0.26	6	12	134.24	11.19	54.33	4	7	1.40	24.76	21.48	$21.91	$21.38	8.43	323.5	291.1
7	27.125	0.26	6	12	134.24	11.19	54.33	4	9	1.80	32.71	22.81	$23.27	$21.38	8.56	328.5	295.6
7	27.125	0.26	6	12	134.24	11.19	54.33	4	11	2.20	40.53	24.15	$24.63	$21.38	8.69	333.3	299.9
7	27.125	0.26	6	12	134.24	11.19	54.33	4	13	2.60	48.18	25.49	$26.00	$21.38	8.81	337.8	304.0
7	27.125	0.26	6	12	134.24	11.19	54.33	5	5	1.55	25.56	22.02	$22.46	$21.38	8.45	324.0	291.6
7	27.125	0.26	6	12	134.24	11.19	54.33	5	7	2.17	37.79	24.10	$24.59	$21.38	8.65	331.6	298.4
7	27.125	0.26	6	12	134.24	11.19	54.33	5	9	2.79	49.71	26.19	$26.71	$21.38	8.83	338.7	304.8
7	27.125	0.26	6	12	134.24	11.19	54.33	5	11	3.41	61.21	28.28	$28.84	$21.38	9.00	345.3	310.8
7	27.125	0.26	6	12	134.24	11.19	54.33	5	13	4.03	71.82	30.36	$30.97	$21.38	9.16	351.3	316.1
7	27.125	0.26	6	12	134.24	11.19	54.33	6	5	2.20	35.85	24.31	$24.80	$21.38	8.61	330.4	297.4
7	27.125	0.26	6	12	134.24	11.19	54.33	6	7	3.08	52.71	27.32	$27.86	$21.38	8.88	340.5	306.4
7	27.125	0.26	6	12	134.24	11.19	54.33	6	9	3.96	68.50	30.32	$30.93	$21.38	9.11	349.4	314.5
7	27.125	0.26	6	12	134.24	11.19	54.33	6	11	4.84	82.88	33.32	$33.99	$21.38	9.31	357.2	321.5
7	27.125	0.26	6	12	134.24	11.19	54.33	6	13	5.72	96.88	36.33	$37.05	$21.38	9.51	364.6	328.1

White Text - inadequate temperature and shrinkage steel
Italic Text - inadequate structural capacity
Highlighted Row - good design – valid for use

1 in. = 25.4 mm
1 ft = 0.3048 m
1 kip = 4.448 kN

Table B-1 (continued). Barrier End Section Strength and Cost Calculations for All Configurations

Top Width (in)	Base Width (in)	Concrete Volume (yd^3 / ft)	Stirrups					Longitudinal Steel				Weight of Steel (lb / ft)	Cost of Steel ($ / ft)	Cost of Concrete ($ / ft)	Yield Line Calculations		
			Bar #	Spacing (in)	Length (in)	Length / ft (ft / ft)	M_C (k-ft / ft)	Bar #	Quantity	A_s (in^2)	M_w (k-ft / ft)				L_{CR} (ft)	ΦR_w (kips)	ΦR_w (kips)
7	27.125	0.26	6	18	134.24	7.46	36.89	3	5	0.55	9.24	13.08	$13.34	$21.38	8.24	214.7	***193.2***
7	27.125	0.26	6	18	134.24	7.46	36.89	3	7	0.77	13.76	13.83	$14.11	$21.38	8.36	217.6	***195.9***
7	27.125	0.26	6	18	134.24	7.46	36.89	3	9	0.99	18.29	14.59	$14.88	$21.38	8.47	220.6	***198.5***
7	27.125	0.26	6	18	134.24	7.46	36.89	3	11	1.21	22.74	15.34	$15.64	$21.38	8.58	223.3	***201.0***
7	27.125	0.26	6	18	134.24	7.46	36.89	3	13	1.43	27.15	16.09	$16.41	$21.38	8.68	226.0	***203.4***
7	27.125	0.26	6	18	134.24	7.46	36.89	4	5	1.00	16.65	14.54	$14.83	$21.38	8.43	219.5	***197.6***
7	27.125	0.26	6	18	134.24	7.46	36.89	4	7	1.40	24.76	15.88	$16.20	$21.38	8.62	224.6	***202.1***
7	27.125	0.26	6	18	134.24	7.46	36.89	4	9	1.80	32.71	17.21	$17.56	$21.38	8.81	229.4	***206.4***
7	27.125	0.26	6	18	134.24	7.46	36.89	4	11	2.20	40.53	18.55	$18.92	$21.38	8.98	233.9	***210.5***
7	27.125	0.26	6	18	134.24	7.46	36.89	4	13	2.60	48.18	19.89	$20.28	$21.38	9.15	238.2	***214.3***
7	27.125	0.26	6	18	134.24	7.46	36.89	5	5	1.55	25.56	16.42	$16.74	$21.38	8.64	225.1	***202.6***
7	27.125	0.26	6	18	134.24	7.46	36.89	5	7	2.17	37.79	18.50	$18.87	$21.38	8.92	232.3	***209.1***
7	27.125	0.26	6	18	134.24	7.46	36.89	5	9	2.79	49.71	20.59	$21.00	$21.38	9.18	239.0	215.1
7	27.125	0.26	6	18	134.24	7.46	36.89	5	11	3.41	61.21	22.67	$23.13	$21.38	9.41	245.2	220.6
7	27.125	0.26	6	18	134.24	7.46	36.89	5	13	4.03	71.82	24.76	$25.26	$21.38	9.62	250.6	225.5
7	27.125	0.26	6	18	134.24	7.46	36.89	6	5	2.20	35.85	18.71	$19.09	$21.38	8.88	231.2	***208.1***
7	27.125	0.26	6	18	134.24	7.46	36.89	6	7	3.08	52.71	21.72	$22.15	$21.38	9.24	240.6	216.6
7	27.125	0.26	6	18	134.24	7.46	36.89	6	9	3.96	68.50	24.72	$25.21	$21.38	9.56	248.9	224.0
7	27.125	0.26	6	18	134.24	7.46	36.89	6	11	4.84	82.88	27.72	$28.28	$21.38	9.83	256.1	230.5
7	27.125	0.26	6	18	134.24	7.46	36.89	6	13	5.72	96.88	30.73	$31.34	$21.38	10.09	262.7	236.5
7	27.125	0.26	6	24	134.24	5.59	27.88	3	5	0.55	9.24	10.28	$10.49	$21.38	8.32	163.7	***147.3***
7	27.125	0.26	6	24	134.24	5.59	27.88	3	7	0.77	13.76	11.03	$11.25	$21.38	8.47	166.6	***150.0***
7	27.125	0.26	6	24	134.24	5.59	27.88	3	9	0.99	18.29	11.79	$12.02	$21.38	8.61	169.4	***152.5***
7	27.125	0.26	6	24	134.24	5.59	27.88	3	11	1.21	22.74	12.54	$12.79	$21.38	8.75	172.1	***154.9***
7	27.125	0.26	6	24	134.24	5.59	27.88	3	13	1.43	27.15	13.29	$13.55	$21.38	8.88	174.7	***157.3***
7	27.125	0.26	6	24	134.24	5.59	27.88	4	5	1.00	16.65	11.74	$11.98	$21.38	8.56	168.4	***151.6***
7	27.125	0.26	6	24	134.24	5.59	27.88	4	7	1.40	24.76	13.08	$13.34	$21.38	8.81	173.3	***156.0***
7	27.125	0.26	6	24	134.24	5.59	27.88	4	9	1.80	32.71	14.41	$14.70	$21.38	9.04	177.9	***160.1***
7	27.125	0.26	6	24	134.24	5.59	27.88	4	11	2.20	40.53	15.75	$16.06	$21.38	9.26	182.2	***164.0***
7	27.125	0.26	6	24	134.24	5.59	27.88	4	13	2.60	48.18	17.09	$17.43	$21.38	9.47	186.3	***167.6***
7	27.125	0.26	6	24	134.24	5.59	27.88	5	5	1.55	25.56	13.62	$13.89	$21.38	8.83	173.8	***156.4***
7	27.125	0.26	6	24	134.24	5.59	27.88	5	7	2.17	37.79	15.70	$16.02	$21.38	9.19	180.7	***162.7***
7	27.125	0.26	6	24	134.24	5.59	27.88	5	9	2.79	49.71	17.79	$18.14	$21.38	9.51	187.0	***168.3***
7	27.125	0.26	6	24	134.24	5.59	27.88	5	11	3.41	61.21	19.87	$20.27	$21.38	9.80	192.8	***173.5***
7	27.125	0.26	6	24	134.24	5.59	27.88	5	13	4.03	71.82	21.96	$22.40	$21.38	10.06	197.9	***178.1***
7	27.125	0.26	6	24	134.24	5.59	27.88	6	5	2.20	35.85	15.91	$16.23	$21.38	9.13	179.7	***161.7***
7	27.125	0.26	6	24	134.24	5.59	27.88	6	7	3.08	52.71	18.92	$19.29	$21.38	9.58	188.6	***169.7***
7	27.125	0.26	6	24	134.24	5.59	27.88	6	9	3.96	68.50	21.92	$22.36	$21.38	9.98	196.3	***176.7***
7	27.125	0.26	6	24	134.24	5.59	27.88	6	11	4.84	82.88	24.92	$25.42	$21.38	10.31	202.9	***182.7***
7	27.125	0.26	6	24	134.24	5.59	27.88	6	13	5.72	96.88	27.93	$28.49	$21.38	10.63	209.1	***188.2***

White Text - inadequate temperature and shrinkage steel
Italic Text - inadequate structural capacity
Highlighted Row - good design – valid for use

1 in. = 25.4 mm
1 ft = 0.3048 m
1 kip = 4.448 kN

Table B-1 (continued). Barrier End Section Strength and Cost Calculations for All Configurations

Top Width (in)	Base Width (in)	Concrete Volume (yd^3 / ft)	Stirrups					Longitudinal Steel				Weight of Steel (lb / ft)	Cost of Steel ($ / ft)	Cost of Concrete ($ / ft)	Yield Line Calculations		
			Bar #	Spacing (in)	Length (in)	Length / ft (ft / ft)	M_C (k-ft / ft)	Bar #	Quantity	A_s (in^2)	M_w (k-ft / ft)				L_{CR} (ft)	ΦR_w (kips)	ΦR_w (kips)
7	27.125	0.26	6	30	134.24	4.47	22.43	3	5	0.55	9.24	8.60	$8.77	$21.38	8.39	132.9	***119.6***
7	27.125	0.26	6	30	134.24	4.47	22.43	3	7	0.77	13.76	9.35	$9.54	$21.38	8.57	135.8	***122.2***
7	27.125	0.26	6	30	134.24	4.47	22.43	3	9	0.99	18.29	10.10	$10.31	$21.38	8.75	138.5	***124.7***
7	27.125	0.26	6	30	134.24	4.47	22.43	3	11	1.21	22.74	10.86	$11.07	$21.38	8.91	141.1	***127.0***
7	27.125	0.26	6	30	134.24	4.47	22.43	3	13	1.43	27.15	11.61	$11.84	$21.38	9.07	143.6	***129.3***
7	27.125	0.26	6	30	134.24	4.47	22.43	4	5	1.00	16.65	10.06	$10.26	$21.38	8.69	137.5	***123.8***
7	27.125	0.26	6	30	134.24	4.47	22.43	4	7	1.40	24.76	11.40	$11.62	$21.38	8.99	142.3	***128.1***
7	27.125	0.26	6	30	134.24	4.47	22.43	4	9	1.80	32.71	12.73	$12.99	$21.38	9.26	146.7	***132.0***
7	27.125	0.26	6	30	134.24	4.47	22.43	4	11	2.20	40.53	14.07	$14.35	$21.38	9.52	150.8	***135.7***
7	27.125	0.26	6	30	134.24	4.47	22.43	4	13	2.60	48.18	15.40	$15.71	$21.38	9.77	154.6	***139.2***
7	27.125	0.26	6	30	134.24	4.47	22.43	5	5	1.55	25.56	11.94	$12.17	$21.38	9.01	142.7	***128.5***
7	27.125	0.26	6	30	134.24	4.47	22.43	5	7	2.17	37.79	14.02	$14.30	$21.38	9.43	149.4	***134.4***
7	27.125	0.26	6	30	134.24	4.47	22.43	5	9	2.79	49.71	16.11	$16.43	$21.38	9.81	155.4	***139.8***
7	27.125	0.26	6	30	134.24	4.47	22.43	5	11	3.41	61.21	18.19	$18.56	$21.38	10.16	160.8	***144.7***
7	27.125	0.26	6	30	134.24	4.47	22.43	5	13	4.03	71.82	20.28	$20.69	$21.38	10.46	165.6	***149.0***
7	27.125	0.26	6	30	134.24	4.47	22.43	6	5	2.20	35.85	14.23	$14.52	$21.38	9.37	148.4	***133.5***
7	27.125	0.26	6	30	134.24	4.47	22.43	6	7	3.08	52.71	17.23	$17.58	$21.38	9.90	156.8	***141.2***
7	27.125	0.26	6	30	134.24	4.47	22.43	6	9	3.96	68.50	20.24	$20.64	$21.38	10.36	164.1	***147.7***
7	27.125	0.26	6	30	134.24	4.47	22.43	6	11	4.84	82.88	23.24	$23.71	$21.38	10.76	170.3	***153.3***
7	27.125	0.26	6	30	134.24	4.47	22.43	6	13	5.72	96.88	26.25	$26.77	$21.38	11.12	176.1	***158.5***
7	27.125	0.26	6	36	134.24	3.73	18.75	3	5	0.55	9.24	7.48	$7.63	$21.38	8.47	112.1	***100.9***
7	27.125	0.26	6	36	134.24	3.73	18.75	3	7	0.77	13.76	8.23	$8.40	$21.38	8.68	114.9	***103.4***
7	27.125	0.26	6	36	134.24	3.73	18.75	3	9	0.99	18.29	8.98	$9.16	$21.38	8.88	117.6	***105.8***
7	27.125	0.26	6	36	134.24	3.73	18.75	3	11	1.21	22.74	9.74	$9.93	$21.38	9.07	120.1	***108.1***
7	27.125	0.26	6	36	134.24	3.73	18.75	3	13	1.43	27.15	10.49	$10.70	$21.38	9.26	122.5	***110.3***
7	27.125	0.26	6	36	134.24	3.73	18.75	4	5	1.00	16.65	8.94	$9.12	$21.38	8.81	116.6	***104.9***
7	27.125	0.26	6	36	134.24	3.73	18.75	4	7	1.40	24.76	10.28	$10.48	$21.38	9.16	121.2	***109.1***
7	27.125	0.26	6	36	134.24	3.73	18.75	4	9	1.80	32.71	11.61	$11.85	$21.38	9.48	125.4	***112.9***
7	27.125	0.26	6	36	134.24	3.73	18.75	4	11	2.20	40.53	12.95	$13.21	$21.38	9.78	129.4	***116.4***
7	27.125	0.26	6	36	134.24	3.73	18.75	4	13	2.60	48.18	14.28	$14.57	$21.38	10.05	133.0	***119.7***
7	27.125	0.26	6	36	134.24	3.73	18.75	5	5	1.55	25.56	10.82	$11.03	$21.38	9.19	121.6	***109.5***
7	27.125	0.26	6	36	134.24	3.73	18.75	5	7	2.17	37.79	12.90	$13.16	$21.38	9.67	128.0	***115.2***
7	27.125	0.26	6	36	134.24	3.73	18.75	5	9	2.79	49.71	14.99	$15.29	$21.38	10.11	133.8	***120.4***
7	27.125	0.26	6	36	134.24	3.73	18.75	5	11	3.41	61.21	17.07	$17.42	$21.38	10.50	138.9	***125.0***
7	27.125	0.26	6	36	134.24	3.73	18.75	5	13	4.03	71.82	19.16	$19.54	$21.38	10.84	143.4	***129.1***
7	27.125	0.26	6	36	134.24	3.73	18.75	6	5	2.20	35.85	13.11	$13.37	$21.38	9.60	127.0	***114.3***
7	27.125	0.26	6	36	134.24	3.73	18.75	6	7	3.08	52.71	16.11	$16.44	$21.38	10.21	135.1	***121.6***
7	27.125	0.26	6	36	134.24	3.73	18.75	6	9	3.96	68.50	19.12	$19.50	$21.38	10.73	142.0	***127.8***
7	27.125	0.26	6	36	134.24	3.73	18.75	6	11	4.84	82.88	22.12	$22.57	$21.38	11.18	147.9	***133.1***
7	27.125	0.26	6	36	134.24	3.73	18.75	6	13	5.72	96.88	25.13	$25.63	$21.38	11.58	153.3	***138.0***

White Text - inadequate temperature and shrinkage steel
Italic Text - inadequate structural capacity
Highlighted Row - good design – valid for use

1 in. = 25.4 mm
1 ft = 0.3048 m
1 kip = 4.448 kN

Table B-1 (continued). Barrier End Section Strength and Cost Calculations for All Configurations

Top Width (in)	Base Width (in)	Concrete Volume (yd^3 / ft)	Stirrups					Longitudinal Steel				Weight of Steel (lb / ft)	Cost of Steel ($ / ft)	Cost of Concrete ($ / ft)	Yield Line Calculations		
			Bar #	Spacing (in)	Length (in)	Length / ft (ft / ft)	M_C (k-ft / ft)	Bar #	Quantity	A_s (in^2)	M_w (k-ft / ft)				L_{CR} (ft)	ΦR_w (kips)	ΦR_w (kips)
8	28.125	0.27	3	12	118.59	9.88	14.67	3	5	0.55	9.62	5.60	$5.71	$22.32	8.61	89.2	***80.2***
8	28.125	0.27	3	12	118.59	9.88	14.67	3	7	0.77	14.35	6.35	$6.47	$22.32	8.88	92.0	***82.8***
8	28.125	0.27	3	12	118.59	9.88	14.67	3	9	0.99	19.06	7.10	$7.24	$22.32	9.14	94.6	***85.2***
8	28.125	0.27	3	12	118.59	9.88	14.67	3	11	1.21	23.71	7.85	$8.01	$22.32	9.38	97.1	***87.4***
8	28.125	0.27	3	12	118.59	9.88	14.67	3	13	1.43	28.32	8.60	$8.78	$22.32	9.61	99.5	***89.6***
8	28.125	0.27	3	12	118.59	9.88	14.67	4	5	1.00	17.35	7.06	$7.20	$22.32	9.05	93.7	***84.3***
8	28.125	0.27	3	12	118.59	9.88	14.67	4	7	1.40	25.82	8.39	$8.56	$22.32	9.49	98.2	***88.4***
8	28.125	0.27	3	12	118.59	9.88	14.67	4	9	1.80	34.12	9.73	$9.92	$22.32	9.89	102.4	***92.1***
8	28.125	0.27	3	12	118.59	9.88	14.67	4	11	2.20	42.29	11.06	$11.28	$22.32	10.26	106.2	***95.6***
8	28.125	0.27	3	12	118.59	9.88	14.67	4	13	2.60	50.29	12.40	$12.65	$22.32	10.60	109.7	***98.7***
8	28.125	0.27	3	12	118.59	9.88	14.67	5	5	1.55	26.65	8.93	$9.11	$22.32	9.53	98.7	***88.8***
8	28.125	0.27	3	12	118.59	9.88	14.67	5	7	2.17	39.44	11.02	$11.24	$22.32	10.13	104.9	***94.4***
8	28.125	0.27	3	12	118.59	9.88	14.67	5	9	2.79	51.88	13.10	$13.36	$22.32	10.66	110.4	***99.4***
8	28.125	0.27	3	12	118.59	9.88	14.67	5	11	3.41	63.94	15.19	$15.49	$22.32	11.14	115.3	***103.8***
8	28.125	0.27	3	12	118.59	9.88	14.67	5	13	4.03	75.12	17.27	$17.62	$22.32	11.56	119.7	***107.7***
8	28.125	0.27	3	12	118.59	9.88	14.67	6	5	2.20	37.41	11.23	$11.45	$22.32	10.04	103.9	***93.5***
8	28.125	0.27	3	12	118.59	9.88	14.67	6	7	3.08	55.03	14.23	$14.51	$22.32	10.79	111.7	***100.5***
8	28.125	0.27	3	12	118.59	9.88	14.67	6	9	3.96	71.62	17.23	$17.58	$22.32	11.43	118.3	***106.5***
8	28.125	0.27	3	12	118.59	9.88	14.67	6	11	4.84	86.76	20.24	$20.64	$22.32	11.97	123.9	***111.5***
8	28.125	0.27	3	12	118.59	9.88	14.67	6	13	5.72	101.56	23.24	$23.71	$22.32	12.46	129.0	***116.1***
8	28.125	0.27	3	18	118.59	6.59	9.83	3	5	0.55	9.62	4.36	$4.44	$22.32	8.88	61.7	***55.5***
8	28.125	0.27	3	18	118.59	6.59	9.83	3	7	0.77	14.35	5.11	$5.21	$22.32	9.26	64.3	***57.9***
8	28.125	0.27	3	18	118.59	6.59	9.83	3	9	0.99	19.06	5.86	$5.98	$22.32	9.62	66.8	***60.1***
8	28.125	0.27	3	18	118.59	6.59	9.83	3	11	1.21	23.71	6.61	$6.75	$22.32	9.95	69.0	***62.1***
8	28.125	0.27	3	18	118.59	6.59	9.83	3	13	1.43	28.32	7.37	$7.51	$22.32	10.25	71.2	***64.1***
8	28.125	0.27	3	18	118.59	6.59	9.83	4	5	1.00	17.35	5.82	$5.93	$22.32	9.49	65.9	***59.3***
8	28.125	0.27	3	18	118.59	6.59	9.83	4	7	1.40	25.82	7.15	$7.30	$22.32	10.09	70.0	***63.0***
8	28.125	0.27	3	18	118.59	6.59	9.83	4	9	1.80	34.12	8.49	$8.66	$22.32	10.62	73.7	***66.4***
8	28.125	0.27	3	18	118.59	6.59	9.83	4	11	2.20	42.29	9.83	$10.02	$22.32	11.11	77.1	***69.4***
8	28.125	0.27	3	18	118.59	6.59	9.83	4	13	2.60	50.29	11.16	$11.38	$22.32	11.55	80.2	***72.2***
8	28.125	0.27	3	18	118.59	6.59	9.83	5	5	1.55	26.65	7.69	$7.85	$22.32	10.14	70.4	***63.4***
8	28.125	0.27	3	18	118.59	6.59	9.83	5	7	2.17	39.44	9.78	$9.97	$22.32	10.94	76.0	***68.4***
8	28.125	0.27	3	18	118.59	6.59	9.83	5	9	2.79	51.88	11.86	$12.10	$22.32	11.64	80.8	***72.7***
8	28.125	0.27	3	18	118.59	6.59	9.83	5	11	3.41	63.94	13.95	$14.23	$22.32	12.26	85.1	***76.6***
8	28.125	0.27	3	18	118.59	6.59	9.83	5	13	4.03	75.12	16.04	$16.36	$22.32	12.79	88.8	***79.9***
8	28.125	0.27	3	18	118.59	6.59	9.83	6	5	2.20	37.41	9.99	$10.19	$22.32	10.82	75.1	***67.6***
8	28.125	0.27	3	18	118.59	6.59	9.83	6	7	3.08	55.03	12.99	$13.25	$22.32	11.81	81.9	***73.7***
8	28.125	0.27	3	18	118.59	6.59	9.83	6	9	3.96	71.62	16.00	$16.32	$22.32	12.63	87.7	***78.9***
8	28.125	0.27	3	18	118.59	6.59	9.83	6	11	4.84	86.76	19.00	$19.38	$22.32	13.32	92.4	***83.2***
8	28.125	0.27	3	18	118.59	6.59	9.83	6	13	5.72	101.56	22.00	$22.44	$22.32	13.95	96.8	***87.1***

White Text - inadequate temperature and shrinkage steel
Italic Text - inadequate structural capacity
Highlighted Row - good design – valid for use

1 in. = 25.4 mm
1 ft = 0.3048 m
1 kip = 4.448 kN

Table B-1 (continued). Barrier End Section Strength and Cost Calculations for All Configurations

Top Width (in)	Base Width (in)	Concrete Volume (yd^3 / ft)	Stirrups					Longitudinal Steel				Weight of Steel (lb / ft)	Cost of Steel ($ / ft)	Cost of Concrete ($ / ft)	Yield Line Calculations		
			Bar #	Spacing (in)	Length (in)	Length / ft (ft / ft)	M_C (k-ft / ft)	Bar #	Quantity	A_s (in^2)	M_w (k-ft / ft)				L_{CR} (ft)	ΦR_w (kips)	ΦR_w (kips)
8	28.125	0.27	3	24	118.59	4.94	7.38	3	5	0.55	9.62	3.74	$3.81	$22.32	9.14	47.6	***42.8***
8	28.125	0.27	3	24	118.59	4.94	7.38	3	7	0.77	14.35	4.49	$4.58	$22.32	9.62	50.1	***45.1***
8	28.125	0.27	3	24	118.59	4.94	7.38	3	9	0.99	19.06	5.24	$5.35	$22.32	10.06	52.4	***47.1***
8	28.125	0.27	3	24	118.59	4.94	7.38	3	11	1.21	23.71	5.99	$6.11	$22.32	10.47	54.5	***49.0***
8	28.125	0.27	3	24	118.59	4.94	7.38	3	13	1.43	28.32	6.75	$6.88	$22.32	10.84	56.4	***50.8***
8	28.125	0.27	3	24	118.59	4.94	7.38	4	5	1.00	17.35	5.20	$5.30	$22.32	9.91	51.6	***46.4***
8	28.125	0.27	3	24	118.59	4.94	7.38	4	7	1.40	25.82	6.53	$6.66	$22.32	10.64	55.4	***49.9***
8	28.125	0.27	3	24	118.59	4.94	7.38	4	9	1.80	34.12	7.87	$8.03	$22.32	11.29	58.8	***52.9***
8	28.125	0.27	3	24	118.59	4.94	7.38	4	11	2.20	42.29	9.21	$9.39	$22.32	11.88	61.8	***55.6***
8	28.125	0.27	3	24	118.59	4.94	7.38	4	13	2.60	50.29	10.54	$10.75	$22.32	12.41	64.6	***58.1***
8	28.125	0.27	3	24	118.59	4.94	7.38	5	5	1.55	26.65	7.07	$7.21	$22.32	10.71	55.7	***50.2***
8	28.125	0.27	3	24	118.59	4.94	7.38	5	7	2.17	39.44	9.16	$9.34	$22.32	11.68	60.8	***54.7***
8	28.125	0.27	3	24	118.59	4.94	7.38	5	9	2.79	51.88	11.24	$11.47	$22.32	12.51	65.1	***58.6***
8	28.125	0.27	3	24	118.59	4.94	7.38	5	11	3.41	63.94	13.33	$13.60	$22.32	13.25	69.0	***62.1***
8	28.125	0.27	3	24	118.59	4.94	7.38	5	13	4.03	75.12	15.42	$15.73	$22.32	13.89	72.3	***65.1***
8	28.125	0.27	3	24	118.59	4.94	7.38	6	5	2.20	37.41	9.37	$9.56	$22.32	11.53	60.0	***54.0***
8	28.125	0.27	3	24	118.59	4.94	7.38	6	7	3.08	55.03	12.37	$12.62	$22.32	12.71	66.2	***59.6***
8	28.125	0.27	3	24	118.59	4.94	7.38	6	9	3.96	71.62	15.38	$15.68	$22.32	13.69	71.3	***64.2***
8	28.125	0.27	3	24	118.59	4.94	7.38	6	11	4.84	86.76	18.38	$18.75	$22.32	14.51	75.5	***68.0***
8	28.125	0.27	3	24	118.59	4.94	7.38	6	13	5.72	101.56	21.38	$21.81	$22.32	15.25	79.4	***71.4***
8	28.125	0.27	3	30	118.59	3.95	5.90	3	5	0.55	9.62	3.37	$3.43	$22.32	9.39	39.1	***35.2***
8	28.125	0.27	3	30	118.59	3.95	5.90	3	7	0.77	14.35	4.12	$4.20	$22.32	9.96	41.5	***37.3***
8	28.125	0.27	3	30	118.59	3.95	5.90	3	9	0.99	19.06	4.87	$4.97	$22.32	10.48	43.6	***39.3***
8	28.125	0.27	3	30	118.59	3.95	5.90	3	11	1.21	23.71	5.62	$5.73	$22.32	10.95	45.6	***41.0***
8	28.125	0.27	3	30	118.59	3.95	5.90	3	13	1.43	28.32	6.37	$6.50	$22.32	11.38	47.4	***42.7***
8	28.125	0.27	3	30	118.59	3.95	5.90	4	5	1.00	17.35	4.83	$4.92	$22.32	10.29	42.9	***38.6***
8	28.125	0.27	3	30	118.59	3.95	5.90	4	7	1.40	25.82	6.16	$6.29	$22.32	11.15	46.4	***41.8***
8	28.125	0.27	3	30	118.59	3.95	5.90	4	9	1.80	34.12	7.50	$7.65	$22.32	11.90	49.6	***44.6***
8	28.125	0.27	3	30	118.59	3.95	5.90	4	11	2.20	42.29	8.83	$9.01	$22.32	12.58	52.4	***47.1***
8	28.125	0.27	3	30	118.59	3.95	5.90	4	13	2.60	50.29	10.17	$10.37	$22.32	13.19	54.9	***49.4***
8	28.125	0.27	3	30	118.59	3.95	5.90	5	5	1.55	26.65	6.70	$6.84	$22.32	11.23	46.8	***42.1***
8	28.125	0.27	3	30	118.59	3.95	5.90	5	7	2.17	39.44	8.79	$8.96	$22.32	12.35	51.4	***46.3***
8	28.125	0.27	3	30	118.59	3.95	5.90	5	9	2.79	51.88	10.87	$11.09	$22.32	13.31	55.4	***49.9***
8	28.125	0.27	3	30	118.59	3.95	5.90	5	11	3.41	63.94	12.96	$13.22	$22.32	14.15	58.9	***53.0***
8	28.125	0.27	3	30	118.59	3.95	5.90	5	13	4.03	75.12	15.05	$15.35	$22.32	14.87	61.9	***55.7***
8	28.125	0.27	3	30	118.59	3.95	5.90	6	5	2.20	37.41	9.00	$9.18	$22.32	12.18	50.7	***45.7***
8	28.125	0.27	3	30	118.59	3.95	5.90	6	7	3.08	55.03	12.00	$12.24	$22.32	13.53	56.4	***50.7***
8	28.125	0.27	3	30	118.59	3.95	5.90	6	9	3.96	71.62	15.00	$15.30	$22.32	14.65	61.0	***54.9***
8	28.125	0.27	3	30	118.59	3.95	5.90	6	11	4.84	86.76	18.01	$18.37	$22.32	15.58	64.9	***58.4***
8	28.125	0.27	3	30	118.59	3.95	5.90	6	13	5.72	101.56	21.01	$21.43	$22.32	16.42	68.4	***61.5***

White Text - inadequate temperature and shrinkage steel
Italic Text - inadequate structural capacity
Highlighted Row - good design – valid for use

1 in. = 25.4 mm
1 ft = 0.3048 m
1 kip = 4.448 kN

Table B-1 (continued). Barrier End Section Strength and Cost Calculations for All Configurations

Top Width (in)	Base Width (in)	Concrete Volume (yd^3 / ft)	Stirrups					Longitudinal Steel				Weight of Steel (lb / ft)	Cost of Steel ($ / ft)	Cost of Concrete ($ / ft)	Yield Line Calculations		
			Bar #	Spacing (in)	Length (in)	Length / ft (ft / ft)	M_C (k-ft / ft)	Bar #	Quantity	A_s (in^2)	M_w (k-ft / ft)				L_{CR} (ft)	ΦR_w (kips)	ΦR_w (kips)
8	28.125	0.27	3	36	118.59	3.29	4.92	3	5	0.55	9.62	3.12	$3.18	$22.32	9.63	33.4	***30.1***
8	28.125	0.27	3	36	118.59	3.29	4.92	3	7	0.77	14.35	3.87	$3.95	$22.32	10.28	35.7	***32.1***
8	28.125	0.27	3	36	118.59	3.29	4.92	3	9	0.99	19.06	4.62	$4.72	$22.32	10.86	37.7	***33.9***
8	28.125	0.27	3	36	118.59	3.29	4.92	3	11	1.21	23.71	5.37	$5.48	$22.32	11.40	39.6	***35.6***
8	28.125	0.27	3	36	118.59	3.29	4.92	3	13	1.43	28.32	6.13	$6.25	$22.32	11.89	41.3	***37.1***
8	28.125	0.27	3	36	118.59	3.29	4.92	4	5	1.00	17.35	4.58	$4.67	$22.32	10.66	37.0	***33.3***
8	28.125	0.27	3	36	118.59	3.29	4.92	4	7	1.40	25.82	5.91	$6.03	$22.32	11.63	40.4	***36.3***
8	28.125	0.27	3	36	118.59	3.29	4.92	4	9	1.80	34.12	7.25	$7.40	$22.32	12.47	43.3	***38.9***
8	28.125	0.27	3	36	118.59	3.29	4.92	4	11	2.20	42.29	8.59	$8.76	$22.32	13.22	45.9	***41.3***
8	28.125	0.27	3	36	118.59	3.29	4.92	4	13	2.60	50.29	9.92	$10.12	$22.32	13.91	48.3	***43.4***
8	28.125	0.27	3	36	118.59	3.29	4.92	5	5	1.55	26.65	6.45	$6.58	$22.32	11.71	40.7	***36.6***
8	28.125	0.27	3	36	118.59	3.29	4.92	5	7	2.17	39.44	8.54	$8.71	$22.32	12.97	45.0	***40.5***
8	28.125	0.27	3	36	118.59	3.29	4.92	5	9	2.79	51.88	10.63	$10.84	$22.32	14.04	48.7	***43.8***
8	28.125	0.27	3	36	118.59	3.29	4.92	5	11	3.41	63.94	12.71	$12.97	$22.32	14.97	52.0	***46.8***
8	28.125	0.27	3	36	118.59	3.29	4.92	5	13	4.03	75.12	14.80	$15.09	$22.32	15.77	54.7	***49.3***
8	28.125	0.27	3	36	118.59	3.29	4.92	6	5	2.20	37.41	8.75	$8.92	$22.32	12.78	44.4	***39.9***
8	28.125	0.27	3	36	118.59	3.29	4.92	6	7	3.08	55.03	11.75	$11.99	$22.32	14.29	49.6	***44.6***
8	28.125	0.27	3	36	118.59	3.29	4.92	6	9	3.96	71.62	14.76	$15.05	$22.32	15.53	53.9	***48.5***
8	28.125	0.27	3	36	118.59	3.29	4.92	6	11	4.84	86.76	17.76	$18.12	$22.32	16.56	57.5	***51.7***
8	28.125	0.27	3	36	118.59	3.29	4.92	6	13	5.72	101.56	20.76	$21.18	$22.32	17.48	60.7	***54.6***
8	28.125	0.27	4	12	119.91	9.99	26.42	3	5	0.55	9.62	8.55	$8.73	$22.32	8.35	155.7	***140.1***
8	28.125	0.27	4	12	119.91	9.99	26.42	3	7	0.77	14.35	9.31	$9.49	$22.32	8.51	158.7	***142.9***
8	28.125	0.27	4	12	119.91	9.99	26.42	3	9	0.99	19.06	10.06	$10.26	$22.32	8.67	161.6	***145.5***
8	28.125	0.27	4	12	119.91	9.99	26.42	3	11	1.21	23.71	10.81	$11.03	$22.32	8.82	164.4	***148.0***
8	28.125	0.27	4	12	119.91	9.99	26.42	3	13	1.43	28.32	11.56	$11.79	$22.32	8.96	167.1	***150.4***
8	28.125	0.27	4	12	119.91	9.99	26.42	4	5	1.00	17.35	10.01	$10.22	$22.32	8.61	160.6	***144.5***
8	28.125	0.27	4	12	119.91	9.99	26.42	4	7	1.40	25.82	11.35	$11.58	$22.32	8.88	165.6	***149.1***
8	28.125	0.27	4	12	119.91	9.99	26.42	4	9	1.80	34.12	12.69	$12.94	$22.32	9.13	170.3	***153.3***
8	28.125	0.27	4	12	119.91	9.99	26.42	4	11	2.20	42.29	14.02	$14.30	$22.32	9.37	174.8	***157.3***
8	28.125	0.27	4	12	119.91	9.99	26.42	4	13	2.60	50.29	15.36	$15.67	$22.32	9.59	178.9	***161.0***
8	28.125	0.27	4	12	119.91	9.99	26.42	5	5	1.55	26.65	11.89	$12.13	$22.32	8.91	166.1	***149.5***
8	28.125	0.27	4	12	119.91	9.99	26.42	5	7	2.17	39.44	13.98	$14.26	$22.32	9.29	173.2	***155.9***
8	28.125	0.27	4	12	119.91	9.99	26.42	5	9	2.79	51.88	16.06	$16.38	$22.32	9.64	179.7	***161.7***
8	28.125	0.27	4	12	119.91	9.99	26.42	5	11	3.41	63.94	18.15	$18.51	$22.32	9.95	185.6	***167.0***
8	28.125	0.27	4	12	119.91	9.99	26.42	5	13	4.03	75.12	20.23	$20.64	$22.32	10.23	190.8	***171.7***
8	28.125	0.27	4	12	119.91	9.99	26.42	6	5	2.20	37.41	14.18	$14.47	$22.32	9.23	172.1	***154.9***
8	28.125	0.27	4	12	119.91	9.99	26.42	6	7	3.08	55.03	17.19	$17.53	$22.32	9.72	181.3	***163.1***
8	28.125	0.27	4	12	119.91	9.99	26.42	6	9	3.96	71.62	20.19	$20.60	$22.32	10.15	189.2	***170.3***
8	28.125	0.27	4	12	119.91	9.99	26.42	6	11	4.84	86.76	23.20	$23.66	$22.32	10.51	196.0	***176.4***
8	28.125	0.27	4	12	119.91	9.99	26.42	6	13	5.72	101.56	26.20	$26.72	$22.32	10.85	202.2	***182.0***

White Text - inadequate temperature and shrinkage steel
Italic Text - inadequate structural capacity
Highlighted Row - good design – valid for use

1 in. = 25.4 mm
1 ft = 0.3048 m
1 kip = 4.448 kN

Table B-1 (continued). Barrier End Section Strength and Cost Calculations for All Configurations

Top Width (in)	Base Width (in)	Concrete Volume (yd^3 / ft)	Stirrups					Longitudinal Steel				Weight of Steel (lb / ft)	Cost of Steel ($ / ft)	Cost of Concrete ($ / ft)	Yield Line Calculations		
			Bar #	Spacing (in)	Length (in)	Length / ft (ft / ft)	M_C (k-ft / ft)	Bar #	Quantity	A_s (in^2)	M_w (k-ft / ft)				L_{CR} (ft)	ΦR_w (kips)	ΦR_w (kips)
8	28.125	0.27	4	18	119.91	6.66	17.72	3	5	0.55	9.62	6.33	$6.46	$22.32	8.51	106.5	***95.8***
8	28.125	0.27	4	18	119.91	6.66	17.72	3	7	0.77	14.35	7.08	$7.22	$22.32	8.74	109.4	***98.4***
8	28.125	0.27	4	18	119.91	6.66	17.72	3	9	0.99	19.06	7.83	$7.99	$22.32	8.96	112.1	***100.9***
8	28.125	0.27	4	18	119.91	6.66	17.72	3	11	1.21	23.71	8.59	$8.76	$22.32	9.17	114.7	***103.3***
8	28.125	0.27	4	18	119.91	6.66	17.72	3	13	1.43	28.32	9.34	$9.52	$22.32	9.37	117.2	***105.5***
8	28.125	0.27	4	18	119.91	6.66	17.72	4	5	1.00	17.35	7.79	$7.95	$22.32	8.88	111.1	***100.0***
8	28.125	0.27	4	18	119.91	6.66	17.72	4	7	1.40	25.82	9.13	$9.31	$22.32	9.26	115.9	***104.3***
8	28.125	0.27	4	18	119.91	6.66	17.72	4	9	1.80	34.12	10.46	$10.67	$22.32	9.61	120.2	***108.2***
8	28.125	0.27	4	18	119.91	6.66	17.72	4	11	2.20	42.29	11.80	$12.03	$22.32	9.93	124.2	***111.8***
8	28.125	0.27	4	18	119.91	6.66	17.72	4	13	2.60	50.29	13.13	$13.40	$22.32	10.23	127.9	***115.1***
8	28.125	0.27	4	18	119.91	6.66	17.72	5	5	1.55	26.65	9.66	$9.86	$22.32	9.30	116.3	***104.7***
8	28.125	0.27	4	18	119.91	6.66	17.72	5	7	2.17	39.44	11.75	$11.99	$22.32	9.82	122.8	***110.6***
8	28.125	0.27	4	18	119.91	6.66	17.72	5	9	2.79	51.88	13.84	$14.11	$22.32	10.29	128.7	***115.8***
8	28.125	0.27	4	18	119.91	6.66	17.72	5	11	3.41	63.94	15.92	$16.24	$22.32	10.71	133.9	***120.5***
8	28.125	0.27	4	18	119.91	6.66	17.72	5	13	4.03	75.12	18.01	$18.37	$22.32	11.07	138.5	***124.7***
8	28.125	0.27	4	18	119.91	6.66	17.72	6	5	2.20	37.41	11.96	$12.20	$22.32	9.74	121.8	***109.7***
8	28.125	0.27	4	18	119.91	6.66	17.72	6	7	3.08	55.03	14.96	$15.26	$22.32	10.40	130.1	***117.1***
8	28.125	0.27	4	18	119.91	6.66	17.72	6	9	3.96	71.62	17.97	$18.33	$22.32	10.96	137.1	***123.4***
8	28.125	0.27	4	18	119.91	6.66	17.72	6	11	4.84	86.76	20.97	$21.39	$22.32	11.44	143.1	***128.8***
8	28.125	0.27	4	18	119.91	6.66	17.72	6	13	5.72	101.56	23.98	$24.46	$22.32	11.87	148.5	***133.7***
8	28.125	0.27	4	24	119.91	5.00	13.33	3	5	0.55	9.62	5.22	$5.32	$22.32	8.67	81.6	***73.4***
8	28.125	0.27	4	24	119.91	5.00	13.33	3	7	0.77	14.35	5.97	$6.09	$22.32	8.96	84.4	***75.9***
8	28.125	0.27	4	24	119.91	5.00	13.33	3	9	0.99	19.06	6.72	$6.86	$22.32	9.24	87.0	***78.3***
8	28.125	0.27	4	24	119.91	5.00	13.33	3	11	1.21	23.71	7.47	$7.62	$22.32	9.50	89.4	***80.5***
8	28.125	0.27	4	24	119.91	5.00	13.33	3	13	1.43	28.32	8.23	$8.39	$22.32	9.75	91.8	***82.6***
8	28.125	0.27	4	24	119.91	5.00	13.33	4	5	1.00	17.35	6.68	$6.81	$22.32	9.14	86.0	***77.4***
8	28.125	0.27	4	24	119.91	5.00	13.33	4	7	1.40	25.82	8.01	$8.17	$22.32	9.62	90.5	***81.5***
8	28.125	0.27	4	24	119.91	5.00	13.33	4	9	1.80	34.12	9.35	$9.54	$22.32	10.04	94.5	***85.1***
8	28.125	0.27	4	24	119.91	5.00	13.33	4	11	2.20	42.29	10.69	$10.90	$22.32	10.44	98.3	***88.4***
8	28.125	0.27	4	24	119.91	5.00	13.33	4	13	2.60	50.29	12.02	$12.26	$22.32	10.80	101.7	***91.5***
8	28.125	0.27	4	24	119.91	5.00	13.33	5	5	1.55	26.65	8.55	$8.72	$22.32	9.66	90.9	***81.8***
8	28.125	0.27	4	24	119.91	5.00	13.33	5	7	2.17	39.44	10.64	$10.85	$22.32	10.30	97.0	***87.3***
8	28.125	0.27	4	24	119.91	5.00	13.33	5	9	2.79	51.88	12.72	$12.98	$22.32	10.87	102.3	***92.1***
8	28.125	0.27	4	24	119.91	5.00	13.33	5	11	3.41	63.94	14.81	$15.11	$22.32	11.38	107.1	***96.4***
8	28.125	0.27	4	24	119.91	5.00	13.33	5	13	4.03	75.12	16.90	$17.23	$22.32	11.82	111.3	***100.2***
8	28.125	0.27	4	24	119.91	5.00	13.33	6	5	2.20	37.41	10.85	$11.06	$22.32	10.21	96.1	***86.5***
8	28.125	0.27	4	24	119.91	5.00	13.33	6	7	3.08	55.03	13.85	$14.13	$22.32	11.01	103.6	***93.3***
8	28.125	0.27	4	24	119.91	5.00	13.33	6	9	3.96	71.62	16.86	$17.19	$22.32	11.69	110.0	***99.0***
8	28.125	0.27	4	24	119.91	5.00	13.33	6	11	4.84	86.76	19.86	$20.26	$22.32	12.26	115.4	***103.9***
8	28.125	0.27	4	24	119.91	5.00	13.33	6	13	5.72	101.56	22.86	$23.32	$22.32	12.78	120.3	***108.3***

White Text - inadequate temperature and shrinkage steel
Italic Text - inadequate structural capacity
Highlighted Row - good design – valid for use

1 in. = 25.4 mm
1 ft = 0.3048 m
1 kip = 4.448 kN

Table B-1 (continued). Barrier End Section Strength and Cost Calculations for All Configurations

Top Width (in)	Base Width (in)	Concrete Volume (yd^3 / ft)	Stirrups					Longitudinal Steel				Weight of Steel (lb / ft)	Cost of Steel ($ / ft)	Cost of Concrete ($ / ft)	Yield Line Calculations		
			Bar #	Spacing (in)	Length (in)	Length / ft (ft / ft)	M_C (k-ft / ft)	Bar #	Quantity	A_s (in^2)	M_w (k-ft / ft)				L_{CR} (ft)	ΦR_w (kips)	ΦR_w (kips)
8	28.125	0.27	4	30	119.91	4.00	10.70	3	5	0.55	9.62	4.55	$4.64	$22.32	8.82	66.6	***59.9***
8	28.125	0.27	4	30	119.91	4.00	10.70	3	7	0.77	14.35	5.30	$5.41	$22.32	9.17	69.3	***62.4***
8	28.125	0.27	4	30	119.91	4.00	10.70	3	9	0.99	19.06	6.05	$6.17	$22.32	9.50	71.8	***64.6***
8	28.125	0.27	4	30	119.91	4.00	10.70	3	11	1.21	23.71	6.81	$6.94	$22.32	9.81	74.1	***66.7***
8	28.125	0.27	4	30	119.91	4.00	10.70	3	13	1.43	28.32	7.56	$7.71	$22.32	10.10	76.3	***68.7***
8	28.125	0.27	4	30	119.91	4.00	10.70	4	5	1.00	17.35	6.01	$6.13	$22.32	9.39	70.9	***63.8***
8	28.125	0.27	4	30	119.91	4.00	10.70	4	7	1.40	25.82	7.35	$7.49	$22.32	9.95	75.1	***67.6***
8	28.125	0.27	4	30	119.91	4.00	10.70	4	9	1.80	34.12	8.68	$8.86	$22.32	10.45	78.9	***71.0***
8	28.125	0.27	4	30	119.91	4.00	10.70	4	11	2.20	42.29	10.02	$10.22	$22.32	10.91	82.4	***74.2***
8	28.125	0.27	4	30	119.91	4.00	10.70	4	13	2.60	50.29	11.35	$11.58	$22.32	11.33	85.6	***77.0***
8	28.125	0.27	4	30	119.91	4.00	10.70	5	5	1.55	26.65	7.88	$8.04	$22.32	10.00	75.5	***68.0***
8	28.125	0.27	4	30	119.91	4.00	10.70	5	7	2.17	39.44	9.97	$10.17	$22.32	10.75	81.2	***73.1***
8	28.125	0.27	4	30	119.91	4.00	10.70	5	9	2.79	51.88	12.06	$12.30	$22.32	11.41	86.2	***77.6***
8	28.125	0.27	4	30	119.91	4.00	10.70	5	11	3.41	63.94	14.14	$14.43	$22.32	12.00	90.6	***81.6***
8	28.125	0.27	4	30	119.91	4.00	10.70	5	13	4.03	75.12	16.23	$16.55	$22.32	12.51	94.5	***85.0***
8	28.125	0.27	4	30	119.91	4.00	10.70	6	5	2.20	37.41	10.18	$10.38	$22.32	10.64	80.4	***72.3***
8	28.125	0.27	4	30	119.91	4.00	10.70	6	7	3.08	55.03	13.18	$13.45	$22.32	11.57	87.4	***78.6***
8	28.125	0.27	4	30	119.91	4.00	10.70	6	9	3.96	71.62	16.19	$16.51	$22.32	12.35	93.3	***84.0***
8	28.125	0.27	4	30	119.91	4.00	10.70	6	11	4.84	86.76	19.19	$19.58	$22.32	13.01	98.2	***88.4***
8	28.125	0.27	4	30	119.91	4.00	10.70	6	13	5.72	101.56	22.20	$22.64	$22.32	13.60	102.7	***92.5***
8	28.125	0.27	4	36	119.91	3.33	8.94	3	5	0.55	9.62	4.10	$4.19	$22.32	8.96	56.6	***50.9***
8	28.125	0.27	4	36	119.91	3.33	8.94	3	7	0.77	14.35	4.86	$4.95	$22.32	9.37	59.2	***53.3***
8	28.125	0.27	4	36	119.91	3.33	8.94	3	9	0.99	19.06	5.61	$5.72	$22.32	9.75	61.6	***55.4***
8	28.125	0.27	4	36	119.91	3.33	8.94	3	11	1.21	23.71	6.36	$6.49	$22.32	10.11	63.8	***57.4***
8	28.125	0.27	4	36	119.91	3.33	8.94	3	13	1.43	28.32	7.11	$7.26	$22.32	10.44	65.9	***59.3***
8	28.125	0.27	4	36	119.91	3.33	8.94	4	5	1.00	17.35	5.56	$5.68	$22.32	9.62	60.7	***54.7***
8	28.125	0.27	4	36	119.91	3.33	8.94	4	7	1.40	25.82	6.90	$7.04	$22.32	10.26	64.8	***58.3***
8	28.125	0.27	4	36	119.91	3.33	8.94	4	9	1.80	34.12	8.24	$8.40	$22.32	10.83	68.4	***61.5***
8	28.125	0.27	4	36	119.91	3.33	8.94	4	11	2.20	42.29	9.57	$9.76	$22.32	11.35	71.6	***64.5***
8	28.125	0.27	4	36	119.91	3.33	8.94	4	13	2.60	50.29	10.91	$11.13	$22.32	11.82	74.6	***67.2***
8	28.125	0.27	4	36	119.91	3.33	8.94	5	5	1.55	26.65	7.44	$7.59	$22.32	10.32	65.1	***58.6***
8	28.125	0.27	4	36	119.91	3.33	8.94	5	7	2.17	39.44	9.53	$9.72	$22.32	11.17	70.5	***63.5***
8	28.125	0.27	4	36	119.91	3.33	8.94	5	9	2.79	51.88	11.61	$11.84	$22.32	11.91	75.2	***67.7***
8	28.125	0.27	4	36	119.91	3.33	8.94	5	11	3.41	63.94	13.70	$13.97	$22.32	12.57	79.3	***71.4***
8	28.125	0.27	4	36	119.91	3.33	8.94	5	13	4.03	75.12	15.78	$16.10	$22.32	13.13	82.9	***74.6***
8	28.125	0.27	4	36	119.91	3.33	8.94	6	5	2.20	37.41	9.73	$9.93	$22.32	11.04	69.7	***62.7***
8	28.125	0.27	4	36	119.91	3.33	8.94	6	7	3.08	55.03	12.74	$12.99	$22.32	12.09	76.3	***68.7***
8	28.125	0.27	4	36	119.91	3.33	8.94	6	9	3.96	71.62	15.74	$16.06	$22.32	12.96	81.8	***73.6***
8	28.125	0.27	4	36	119.91	3.33	8.94	6	11	4.84	86.76	18.75	$19.12	$22.32	13.69	86.4	***77.8***
8	28.125	0.27	4	36	119.91	3.33	8.94	6	13	5.72	101.56	21.75	$22.19	$22.32	14.35	90.6	***81.5***

White Text - inadequate temperature and shrinkage steel
Italic Text - inadequate structural capacity
Highlighted Row - good design – valid for use

1 in. = 25.4 mm
1 ft = 0.3048 m
1 kip = 4.448 kN

Table B-1 (continued). Barrier End Section Strength and Cost Calculations for All Configurations

Top Width (in)	Base Width (in)	Concrete Volume (yd^3 / ft)	Stirrups					Longitudinal Steel				Weight of Steel (lb / ft)	Cost of Steel ($ / ft)	Cost of Concrete ($ / ft)	Yield Line Calculations		
			Bar #	Spacing (in)	Length (in)	Length / ft (ft / ft)	M_C (k-ft / ft)	Bar #	Quantity	A_s (in^2)	M_w (k-ft / ft)				L_{CR} (ft)	ΦR_w (kips)	ΦR_w (kips)
8	28.125	0.27	5	12	120.85	10.07	40.42	3	5	0.55	9.62	12.38	$12.63	$22.32	8.23	234.9	***211.4***
8	28.125	0.27	5	12	120.85	10.07	40.42	3	7	0.77	14.35	13.14	$13.40	$22.32	8.34	238.0	***214.2***
8	28.125	0.27	5	12	120.85	10.07	40.42	3	9	0.99	19.06	13.89	$14.17	$22.32	8.45	241.0	216.9
8	28.125	0.27	5	12	120.85	10.07	40.42	3	11	1.21	23.71	14.64	$14.93	$22.32	8.55	243.9	219.6
8	28.125	0.27	5	12	120.85	10.07	40.42	3	13	1.43	28.32	15.39	$15.70	$22.32	8.65	246.8	222.1
8	28.125	0.27	5	12	120.85	10.07	40.42	4	5	1.00	17.35	13.84	$14.12	$22.32	8.41	239.9	215.9
8	28.125	0.27	5	12	120.85	10.07	40.42	4	7	1.40	25.82	15.18	$15.48	$22.32	8.60	245.3	220.7
8	28.125	0.27	5	12	120.85	10.07	40.42	4	9	1.80	34.12	16.52	$16.85	$22.32	8.77	250.3	225.2
8	28.125	0.27	5	12	120.85	10.07	40.42	4	11	2.20	42.29	17.85	$18.21	$22.32	8.94	255.0	229.5
8	28.125	0.27	5	12	120.85	10.07	40.42	4	13	2.60	50.29	19.19	$19.57	$22.32	9.10	259.6	233.6
8	28.125	0.27	5	12	120.85	10.07	40.42	5	5	1.55	26.65	15.72	$16.03	$22.32	8.61	245.8	221.2
8	28.125	0.27	5	12	120.85	10.07	40.42	5	7	2.17	39.44	17.80	$18.16	$22.32	8.88	253.4	228.1
8	28.125	0.27	5	12	120.85	10.07	40.42	5	9	2.79	51.88	19.89	$20.29	$22.32	9.13	260.4	234.4
8	28.125	0.27	5	12	120.85	10.07	40.42	5	11	3.41	63.94	21.98	$22.42	$22.32	9.36	267.0	240.3
8	28.125	0.27	5	12	120.85	10.07	40.42	5	13	4.03	75.12	24.06	$24.54	$22.32	9.56	272.8	245.5
8	28.125	0.27	5	12	120.85	10.07	40.42	6	5	2.20	37.41	18.01	$18.37	$22.32	8.84	252.2	227.0
8	28.125	0.27	5	12	120.85	10.07	40.42	6	7	3.08	55.03	21.02	$21.44	$22.32	9.19	262.2	236.0
8	28.125	0.27	5	12	120.85	10.07	40.42	6	9	3.96	71.62	24.02	$24.50	$22.32	9.50	271.0	243.9
8	28.125	0.27	5	12	120.85	10.07	40.42	6	11	4.84	86.76	27.03	$27.57	$22.32	9.76	278.6	250.7
8	28.125	0.27	5	12	120.85	10.07	40.42	6	13	5.72	101.56	30.03	$30.63	$22.32	10.01	285.7	257.1
8	28.125	0.27	5	18	120.85	6.71	27.28	3	5	0.55	9.62	8.88	$9.06	$22.32	8.34	160.6	***144.5***
8	28.125	0.27	5	18	120.85	6.71	27.28	3	7	0.77	14.35	9.63	$9.83	$22.32	8.50	163.6	***147.2***
8	28.125	0.27	5	18	120.85	6.71	27.28	3	9	0.99	19.06	10.39	$10.59	$22.32	8.65	166.5	***149.9***
8	28.125	0.27	5	18	120.85	6.71	27.28	3	11	1.21	23.71	11.14	$11.36	$22.32	8.79	169.3	***152.4***
8	28.125	0.27	5	18	120.85	6.71	27.28	3	13	1.43	28.32	11.89	$12.13	$22.32	8.93	172.0	***154.8***
8	28.125	0.27	5	18	120.85	6.71	27.28	4	5	1.00	17.35	10.34	$10.55	$22.32	8.59	165.5	***148.9***
8	28.125	0.27	5	18	120.85	6.71	27.28	4	7	1.40	25.82	11.68	$11.91	$22.32	8.86	170.6	***153.5***
8	28.125	0.27	5	18	120.85	6.71	27.28	4	9	1.80	34.12	13.01	$13.27	$22.32	9.10	175.3	***157.7***
8	28.125	0.27	5	18	120.85	6.71	27.28	4	11	2.20	42.29	14.35	$14.64	$22.32	9.33	179.7	***161.7***
8	28.125	0.27	5	18	120.85	6.71	27.28	4	13	2.60	50.29	15.69	$16.00	$22.32	9.55	183.9	***165.5***
8	28.125	0.27	5	18	120.85	6.71	27.28	5	5	1.55	26.65	12.22	$12.46	$22.32	8.88	171.0	***153.9***
8	28.125	0.27	5	18	120.85	6.71	27.28	5	7	2.17	39.44	14.30	$14.59	$22.32	9.25	178.2	***160.4***
8	28.125	0.27	5	18	120.85	6.71	27.28	5	9	2.79	51.88	16.39	$16.72	$22.32	9.59	184.7	***166.2***
8	28.125	0.27	5	18	120.85	6.71	27.28	5	11	3.41	63.94	18.48	$18.85	$22.32	9.90	190.6	***171.6***
8	28.125	0.27	5	18	120.85	6.71	27.28	5	13	4.03	75.12	20.56	$20.97	$22.32	10.17	195.9	***176.3***
8	28.125	0.27	5	18	120.85	6.71	27.28	6	5	2.20	37.41	14.51	$14.80	$22.32	9.20	177.1	***159.4***
8	28.125	0.27	5	18	120.85	6.71	27.28	6	7	3.08	55.03	17.52	$17.87	$22.32	9.67	186.3	***167.6***
8	28.125	0.27	5	18	120.85	6.71	27.28	6	9	3.96	71.62	20.52	$20.93	$22.32	10.09	194.3	***174.8***
8	28.125	0.27	5	18	120.85	6.71	27.28	6	11	4.84	86.76	23.52	$24.00	$22.32	10.44	201.1	***181.0***
8	28.125	0.27	5	18	120.85	6.71	27.28	6	13	5.72	101.56	26.53	$27.06	$22.32	10.77	207.5	***186.7***

White Text - inadequate temperature and shrinkage steel
Italic Text - inadequate structural capacity
Highlighted Row - good design – valid for use

1 in. = 25.4 mm
1 ft = 0.3048 m
1 kip = 4.448 kN

Table B-1 (continued). Barrier End Section Strength and Cost Calculations for All Configurations

Top Width (in)	Base Width (in)	Concrete Volume (yd^3 / ft)	Stirrups					Longitudinal Steel				Weight of Steel (lb / ft)	Cost of Steel ($ / ft)	Cost of Concrete ($ / ft)	Yield Line Calculations		
			Bar #	Spacing (in)	Length (in)	Length / ft (ft / ft)	M_C (k-ft / ft)	Bar #	Quantity	A_s (in^2)	M_w (k-ft / ft)				L_{CR} (ft)	ΦR_w (kips)	ΦR_w (kips)
8	28.125	0.27	5	24	120.85	5.04	20.58	3	5	0.55	9.62	7.13	$7.27	$22.32	8.44	122.7	***110.4***
8	28.125	0.27	5	24	120.85	5.04	20.58	3	7	0.77	14.35	7.88	$8.04	$22.32	8.65	125.6	***113.1***
8	28.125	0.27	5	24	120.85	5.04	20.58	3	9	0.99	19.06	8.64	$8.81	$22.32	8.84	128.5	***115.6***
8	28.125	0.27	5	24	120.85	5.04	20.58	3	11	1.21	23.71	9.39	$9.58	$22.32	9.02	131.1	***118.0***
8	28.125	0.27	5	24	120.85	5.04	20.58	3	13	1.43	28.32	10.14	$10.34	$22.32	9.20	133.7	***120.3***
8	28.125	0.27	5	24	120.85	5.04	20.58	4	5	1.00	17.35	8.59	$8.76	$22.32	8.77	127.4	***114.7***
8	28.125	0.27	5	24	120.85	5.04	20.58	4	7	1.40	25.82	9.93	$10.13	$22.32	9.11	132.3	***119.1***
8	28.125	0.27	5	24	120.85	5.04	20.58	4	9	1.80	34.12	11.26	$11.49	$22.32	9.41	136.8	***123.1***
8	28.125	0.27	5	24	120.85	5.04	20.58	4	11	2.20	42.29	12.60	$12.85	$22.32	9.70	140.9	***126.8***
8	28.125	0.27	5	24	120.85	5.04	20.58	4	13	2.60	50.29	13.94	$14.21	$22.32	9.97	144.8	***130.3***
8	28.125	0.27	5	24	120.85	5.04	20.58	5	5	1.55	26.65	10.47	$10.68	$22.32	9.14	132.8	***119.5***
8	28.125	0.27	5	24	120.85	5.04	20.58	5	7	2.17	39.44	12.55	$12.80	$22.32	9.60	139.5	***125.6***
8	28.125	0.27	5	24	120.85	5.04	20.58	5	9	2.79	51.88	14.64	$14.93	$22.32	10.02	145.6	***131.0***
8	28.125	0.27	5	24	120.85	5.04	20.58	5	11	3.41	63.94	16.72	$17.06	$22.32	10.40	151.1	***136.0***
8	28.125	0.27	5	24	120.85	5.04	20.58	5	13	4.03	75.12	18.81	$19.19	$22.32	10.73	155.9	***140.3***
8	28.125	0.27	5	24	120.85	5.04	20.58	6	5	2.20	37.41	12.76	$13.02	$22.32	9.53	138.5	***124.6***
8	28.125	0.27	5	24	120.85	5.04	20.58	6	7	3.08	55.03	15.77	$16.08	$22.32	10.12	147.0	***132.3***
8	28.125	0.27	5	24	120.85	5.04	20.58	6	9	3.96	71.62	18.77	$19.15	$22.32	10.63	154.4	***139.0***
8	28.125	0.27	5	24	120.85	5.04	20.58	6	11	4.84	86.76	21.77	$22.21	$22.32	11.06	160.7	***144.6***
8	28.125	0.27	5	24	120.85	5.04	20.58	6	13	5.72	101.56	24.78	$25.27	$22.32	11.46	166.5	***149.8***
8	28.125	0.27	5	30	120.85	4.03	16.50	3	5	0.55	9.62	6.08	$6.20	$22.32	8.55	99.6	***89.6***
8	28.125	0.27	5	30	120.85	4.03	16.50	3	7	0.77	14.35	6.83	$6.97	$22.32	8.79	102.4	***92.2***
8	28.125	0.27	5	30	120.85	4.03	16.50	3	9	0.99	19.06	7.59	$7.74	$22.32	9.03	105.1	***94.6***
8	28.125	0.27	5	30	120.85	4.03	16.50	3	11	1.21	23.71	8.34	$8.50	$22.32	9.25	107.7	***96.9***
8	28.125	0.27	5	30	120.85	4.03	16.50	3	13	1.43	28.32	9.09	$9.27	$22.32	9.46	110.1	***99.1***
8	28.125	0.27	5	30	120.85	4.03	16.50	4	5	1.00	17.35	7.54	$7.69	$22.32	8.94	104.2	***93.8***
8	28.125	0.27	5	30	120.85	4.03	16.50	4	7	1.40	25.82	8.88	$9.06	$22.32	9.34	108.8	***98.0***
8	28.125	0.27	5	30	120.85	4.03	16.50	4	9	1.80	34.12	10.21	$10.42	$22.32	9.71	113.1	***101.8***
8	28.125	0.27	5	30	120.85	4.03	16.50	4	11	2.20	42.29	11.55	$11.78	$22.32	10.05	117.0	***105.3***
8	28.125	0.27	5	30	120.85	4.03	16.50	4	13	2.60	50.29	12.89	$13.14	$22.32	10.36	120.7	***108.6***
8	28.125	0.27	5	30	120.85	4.03	16.50	5	5	1.55	26.65	9.42	$9.60	$22.32	9.38	109.3	***98.3***
8	28.125	0.27	5	30	120.85	4.03	16.50	5	7	2.17	39.44	11.50	$11.73	$22.32	9.93	115.7	***104.1***
8	28.125	0.27	5	30	120.85	4.03	16.50	5	9	2.79	51.88	13.59	$13.86	$22.32	10.42	121.4	***109.2***
8	28.125	0.27	5	30	120.85	4.03	16.50	5	11	3.41	63.94	15.67	$15.99	$22.32	10.86	126.5	***113.9***
8	28.125	0.27	5	30	120.85	4.03	16.50	5	13	4.03	75.12	17.76	$18.12	$22.32	11.25	131.0	***117.9***
8	28.125	0.27	5	30	120.85	4.03	16.50	6	5	2.20	37.41	11.71	$11.95	$22.32	9.85	114.7	***103.2***
8	28.125	0.27	5	30	120.85	4.03	16.50	6	7	3.08	55.03	14.72	$15.01	$22.32	10.54	122.8	***110.5***
8	28.125	0.27	5	30	120.85	4.03	16.50	6	9	3.96	71.62	17.72	$18.07	$22.32	11.13	129.6	***116.7***
8	28.125	0.27	5	30	120.85	4.03	16.50	6	11	4.84	86.76	20.72	$21.14	$22.32	11.63	135.5	***121.9***
8	28.125	0.27	5	30	120.85	4.03	16.50	6	13	5.72	101.56	23.73	$24.20	$22.32	12.09	140.8	***126.7***

White Text - inadequate temperature and shrinkage steel
Italic Text - inadequate structural capacity
Highlighted Row - good design – valid for use

1 in. = 25.4 mm
1 ft = 0.3048 m
1 kip = 4.448 kN

Table B-1 (continued). Barrier End Section Strength and Cost Calculations for All Configurations

Top Width (in)	Base Width (in)	Concrete Volume (yd^3 / ft)	Stirrups					Longitudinal Steel				Weight of Steel (lb / ft)	Cost of Steel ($ / ft)	Cost of Concrete ($ / ft)	Yield Line Calculations		
			Bar #	Spacing (in)	Length (in)	Length / ft (ft / ft)	M_C (k-ft / ft)	Bar #	Quantity	A_s (in^2)	M_w (k-ft / ft)				L_{CR} (ft)	ΦR_w (kips)	ΦR_w (kips)
8	28.125	0.27	5	36	120.85	3.36	13.81	3	5	0.55	9.62	5.38	$5.49	$22.32	8.65	84.3	***75.8***
8	28.125	0.27	5	36	120.85	3.36	13.81	3	7	0.77	14.35	6.13	$6.26	$22.32	8.93	87.1	***78.4***
8	28.125	0.27	5	36	120.85	3.36	13.81	3	9	0.99	19.06	6.89	$7.02	$22.32	9.20	89.7	***80.7***
8	28.125	0.27	5	36	120.85	3.36	13.81	3	11	1.21	23.71	7.64	$7.79	$22.32	9.46	92.2	***82.9***
8	28.125	0.27	5	36	120.85	3.36	13.81	3	13	1.43	28.32	8.39	$8.56	$22.32	9.70	94.5	***85.1***
8	28.125	0.27	5	36	120.85	3.36	13.81	4	5	1.00	17.35	6.84	$6.98	$22.32	9.11	88.8	***79.9***
8	28.125	0.27	5	36	120.85	3.36	13.81	4	7	1.40	25.82	8.18	$8.34	$22.32	9.57	93.3	***83.9***
8	28.125	0.27	5	36	120.85	3.36	13.81	4	9	1.80	34.12	9.51	$9.70	$22.32	9.99	97.3	***87.6***
8	28.125	0.27	5	36	120.85	3.36	13.81	4	11	2.20	42.29	10.85	$11.07	$22.32	10.37	101.1	***91.0***
8	28.125	0.27	5	36	120.85	3.36	13.81	4	13	2.60	50.29	12.19	$12.43	$22.32	10.73	104.5	***94.1***
8	28.125	0.27	5	36	120.85	3.36	13.81	5	5	1.55	26.65	8.72	$8.89	$22.32	9.61	93.7	***84.3***
8	28.125	0.27	5	36	120.85	3.36	13.81	5	7	2.17	39.44	10.80	$11.02	$22.32	10.24	99.8	***89.8***
8	28.125	0.27	5	36	120.85	3.36	13.81	5	9	2.79	51.88	12.89	$13.15	$22.32	10.79	105.2	***94.7***
8	28.125	0.27	5	36	120.85	3.36	13.81	5	11	3.41	63.94	14.97	$15.27	$22.32	11.29	110.0	***99.0***
8	28.125	0.27	5	36	120.85	3.36	13.81	5	13	4.03	75.12	17.06	$17.40	$22.32	11.73	114.3	***102.8***
8	28.125	0.27	5	36	120.85	3.36	13.81	6	5	2.20	37.41	11.01	$11.23	$22.32	10.14	98.9	***89.0***
8	28.125	0.27	5	36	120.85	3.36	13.81	6	7	3.08	55.03	14.02	$14.30	$22.32	10.93	106.5	***95.8***
8	28.125	0.27	5	36	120.85	3.36	13.81	6	9	3.96	71.62	17.02	$17.36	$22.32	11.59	113.0	***101.7***
8	28.125	0.27	5	36	120.85	3.36	13.81	6	11	4.84	86.76	20.02	$20.42	$22.32	12.15	118.4	***106.6***
8	28.125	0.27	5	36	120.85	3.36	13.81	6	13	5.72	101.56	23.03	$23.49	$22.32	12.66	123.4	***111.1***
8	28.125	0.27	6	12	136.74	11.40	56.50	3	5	0.55	9.62	19.00	$19.38	$22.32	8.17	325.7	293.2
8	28.125	0.27	6	12	136.74	11.40	56.50	3	7	0.77	14.35	19.75	$20.14	$22.32	8.25	328.9	296.0
8	28.125	0.27	6	12	136.74	11.40	56.50	3	9	0.99	19.06	20.50	$20.91	$22.32	8.33	332.0	298.8
8	28.125	0.27	6	12	136.74	11.40	56.50	3	11	1.21	23.71	21.25	$21.68	$22.32	8.40	335.0	301.5
8	28.125	0.27	6	12	136.74	11.40	56.50	3	13	1.43	28.32	22.00	$22.44	$22.32	8.47	338.0	304.2
8	28.125	0.27	6	12	136.74	11.40	56.50	4	5	1.00	17.35	20.46	$20.86	$22.32	8.30	330.9	297.8
8	28.125	0.27	6	12	136.74	11.40	56.50	4	7	1.40	25.82	21.79	$22.23	$22.32	8.43	336.4	302.8
8	28.125	0.27	6	12	136.74	11.40	56.50	4	9	1.80	34.12	23.13	$23.59	$22.32	8.57	341.6	307.5
8	28.125	0.27	6	12	136.74	11.40	56.50	4	11	2.20	42.29	24.46	$24.95	$22.32	8.69	346.6	312.0
8	28.125	0.27	6	12	136.74	11.40	56.50	4	13	2.60	50.29	25.80	$26.32	$22.32	8.81	351.4	316.3
8	28.125	0.27	6	12	136.74	11.40	56.50	5	5	1.55	26.65	22.33	$22.78	$22.32	8.45	336.9	303.2
8	28.125	0.27	6	12	136.74	11.40	56.50	5	7	2.17	39.44	24.42	$24.90	$22.32	8.65	344.9	310.4
8	28.125	0.27	6	12	136.74	11.40	56.50	5	9	2.79	51.88	26.50	$27.03	$22.32	8.83	352.3	317.1
8	28.125	0.27	6	12	136.74	11.40	56.50	5	11	3.41	63.94	28.59	$29.16	$22.32	9.01	359.3	323.4
8	28.125	0.27	6	12	136.74	11.40	56.50	5	13	4.03	75.12	30.67	$31.29	$22.32	9.16	365.5	329.0
8	28.125	0.27	6	12	136.74	11.40	56.50	6	5	2.20	37.41	24.63	$25.12	$22.32	8.62	343.7	309.3
8	28.125	0.27	6	12	136.74	11.40	56.50	6	7	3.08	55.03	27.63	$28.18	$22.32	8.88	354.2	318.8
8	28.125	0.27	6	12	136.74	11.40	56.50	6	9	3.96	71.62	30.63	$31.25	$22.32	9.12	363.6	327.2
8	28.125	0.27	6	12	136.74	11.40	56.50	6	11	4.84	86.76	33.64	$34.31	$22.32	9.32	371.8	334.6
8	28.125	0.27	6	12	136.74	11.40	56.50	6	13	5.72	101.56	36.64	$37.37	$22.32	9.52	379.5	341.6

White Text - inadequate temperature and shrinkage steel
Italic Text - inadequate structural capacity
Highlighted Row - good design – valid for use

1 in. = 25.4 mm
1 ft = 0.3048 m
1 kip = 4.448 kN

Table B-1 (continued). Barrier End Section Strength and Cost Calculations for All Configurations

Top Width (in)	Base Width (in)	Concrete Volume (yd^3 / ft)	Stirrups					Longitudinal Steel				Weight of Steel (lb / ft)	Cost of Steel ($ / ft)	Cost of Concrete ($ / ft)	Yield Line Calculations		
			Bar #	Spacing (in)	Length (in)	Length / ft (ft / ft)	M_C (k-ft / ft)	Bar #	Quantity	A_s (in^2)	M_w (k-ft / ft)				L_{CR} (ft)	ΦR_w (kips)	ΦR_w (kips)
8	28.125	0.27	6	18	136.74	7.60	38.33	3	5	0.55	9.62	13.29	$13.56	$22.32	8.24	223.1	***200.8***
8	28.125	0.27	6	18	136.74	7.60	38.33	3	7	0.77	14.35	14.04	$14.32	$22.32	8.36	226.2	***203.6***
8	28.125	0.27	6	18	136.74	7.60	38.33	3	9	0.99	19.06	14.79	$15.09	$22.32	8.47	229.2	***206.3***
8	28.125	0.27	6	18	136.74	7.60	38.33	3	11	1.21	23.71	15.55	$15.86	$22.32	8.58	232.1	***208.9***
8	28.125	0.27	6	18	136.74	7.60	38.33	3	13	1.43	28.32	16.30	$16.62	$22.32	8.68	235.0	***211.5***
8	28.125	0.27	6	18	136.74	7.60	38.33	4	5	1.00	17.35	14.75	$15.05	$22.32	8.43	228.1	***205.3***
8	28.125	0.27	6	18	136.74	7.60	38.33	4	7	1.40	25.82	16.09	$16.41	$22.32	8.63	233.4	***210.1***
8	28.125	0.27	6	18	136.74	7.60	38.33	4	9	1.80	34.12	17.42	$17.77	$22.32	8.81	238.4	214.6
8	28.125	0.27	6	18	136.74	7.60	38.33	4	11	2.20	42.29	18.76	$19.13	$22.32	8.99	243.1	218.8
8	28.125	0.27	6	18	136.74	7.60	38.33	4	13	2.60	50.29	20.09	$20.50	$22.32	9.15	247.6	222.9
8	28.125	0.27	6	18	136.74	7.60	38.33	5	5	1.55	26.65	16.63	$16.96	$22.32	8.65	233.9	***210.5***
8	28.125	0.27	6	18	136.74	7.60	38.33	5	7	2.17	39.44	18.71	$19.09	$22.32	8.93	241.5	217.4
8	28.125	0.27	6	18	136.74	7.60	38.33	5	9	2.79	51.88	20.80	$21.21	$22.32	9.18	248.5	223.6
8	28.125	0.27	6	18	136.74	7.60	38.33	5	11	3.41	63.94	22.88	$23.34	$22.32	9.42	254.9	229.4
8	28.125	0.27	6	18	136.74	7.60	38.33	5	13	4.03	75.12	24.97	$25.47	$22.32	9.63	260.7	234.6
8	28.125	0.27	6	18	136.74	7.60	38.33	6	5	2.20	37.41	18.92	$19.30	$22.32	8.88	240.3	216.3
8	28.125	0.27	6	18	136.74	7.60	38.33	6	7	3.08	55.03	21.92	$22.36	$22.32	9.25	250.2	225.2
8	28.125	0.27	6	18	136.74	7.60	38.33	6	9	3.96	71.62	24.93	$25.43	$22.32	9.57	258.9	233.0
8	28.125	0.27	6	18	136.74	7.60	38.33	6	11	4.84	86.76	27.93	$28.49	$22.32	9.85	266.4	239.8
8	28.125	0.27	6	18	136.74	7.60	38.33	6	13	5.72	101.56	30.94	$31.55	$22.32	10.10	273.4	246.1
8	28.125	0.27	6	24	136.74	5.70	29.00	3	5	0.55	9.62	10.44	$10.65	$22.32	8.32	170.3	***153.3***
8	28.125	0.27	6	24	136.74	5.70	29.00	3	7	0.77	14.35	11.19	$11.41	$22.32	8.47	173.4	***156.0***
8	28.125	0.27	6	24	136.74	5.70	29.00	3	9	0.99	19.06	11.94	$12.18	$22.32	8.61	176.3	***158.7***
8	28.125	0.27	6	24	136.74	5.70	29.00	3	11	1.21	23.71	12.69	$12.95	$22.32	8.75	179.1	***161.2***
8	28.125	0.27	6	24	136.74	5.70	29.00	3	13	1.43	28.32	13.45	$13.71	$22.32	8.88	181.8	***163.7***
8	28.125	0.27	6	24	136.74	5.70	29.00	4	5	1.00	17.35	11.90	$12.14	$22.32	8.56	175.3	***157.7***
8	28.125	0.27	6	24	136.74	5.70	29.00	4	7	1.40	25.82	13.23	$13.50	$22.32	8.81	180.4	***162.3***
8	28.125	0.27	6	24	136.74	5.70	29.00	4	9	1.80	34.12	14.57	$14.86	$22.32	9.04	185.1	***166.6***
8	28.125	0.27	6	24	136.74	5.70	29.00	4	11	2.20	42.29	15.91	$16.22	$22.32	9.26	189.6	***170.7***
8	28.125	0.27	6	24	136.74	5.70	29.00	4	13	2.60	50.29	17.24	$17.59	$22.32	9.47	193.9	***174.5***
8	28.125	0.27	6	24	136.74	5.70	29.00	5	5	1.55	26.65	13.77	$14.05	$22.32	8.83	180.9	***162.8***
8	28.125	0.27	6	24	136.74	5.70	29.00	5	7	2.17	39.44	15.86	$16.18	$22.32	9.19	188.1	***169.3***
8	28.125	0.27	6	24	136.74	5.70	29.00	5	9	2.79	51.88	17.94	$18.30	$22.32	9.51	194.7	***175.2***
8	28.125	0.27	6	24	136.74	5.70	29.00	5	11	3.41	63.94	20.03	$20.43	$22.32	9.81	200.7	***180.6***
8	28.125	0.27	6	24	136.74	5.70	29.00	5	13	4.03	75.12	22.12	$22.56	$22.32	10.07	206.1	***185.4***
8	28.125	0.27	6	24	136.74	5.70	29.00	6	5	2.20	37.41	16.07	$16.39	$22.32	9.13	187.0	***168.3***
8	28.125	0.27	6	24	136.74	5.70	29.00	6	7	3.08	55.03	19.07	$19.45	$22.32	9.59	196.3	***176.7***
8	28.125	0.27	6	24	136.74	5.70	29.00	6	9	3.96	71.62	22.08	$22.52	$22.32	9.99	204.4	***184.0***
8	28.125	0.27	6	24	136.74	5.70	29.00	6	11	4.84	86.76	25.08	$25.58	$22.32	10.33	211.4	***190.2***
8	28.125	0.27	6	24	136.74	5.70	29.00	6	13	5.72	101.56	28.08	$28.65	$22.32	10.64	217.8	***196.1***

White Text - inadequate temperature and shrinkage steel
Italic Text - inadequate structural capacity
Highlighted Row - good design – valid for use

1 in. = 25.4 mm
1 ft = 0.3048 m
1 kip = 4.448 kN

Table B-1 (continued). Barrier End Section Strength and Cost Calculations for All Configurations

Top Width (in)	Base Width (in)	Concrete Volume (yd^3 / ft)	Stirrups					Longitudinal Steel				Weight of Steel (lb / ft)	Cost of Steel ($ / ft)	Cost of Concrete ($ / ft)	Yield Line Calculations		
			Bar #	Spacing (in)	Length (in)	Length / ft (ft / ft)	M_C (k-ft / ft)	Bar #	Quantity	A_s (in^2)	M_w (k-ft / ft)				L_{CR} (ft)	ΦR_w (kips)	ΦR_w (kips)
8	28.125	0.27	6	30	136.74	4.56	23.30	3	5	0.55	9.62	8.73	$8.90	$22.32	8.39	138.1	***124.3***
8	28.125	0.27	6	30	136.74	4.56	23.30	3	7	0.77	14.35	9.48	$9.67	$22.32	8.58	141.1	***127.0***
8	28.125	0.27	6	30	136.74	4.56	23.30	3	9	0.99	19.06	10.23	$10.43	$22.32	8.75	143.9	***129.5***
8	28.125	0.27	6	30	136.74	4.56	23.30	3	11	1.21	23.71	10.98	$11.20	$22.32	8.92	146.6	***132.0***
8	28.125	0.27	6	30	136.74	4.56	23.30	3	13	1.43	28.32	11.73	$11.97	$22.32	9.08	149.3	***134.3***
8	28.125	0.27	6	30	136.74	4.56	23.30	4	5	1.00	17.35	10.19	$10.39	$22.32	8.69	142.9	***128.6***
8	28.125	0.27	6	30	136.74	4.56	23.30	4	7	1.40	25.82	11.52	$11.75	$22.32	8.99	147.9	***133.1***
8	28.125	0.27	6	30	136.74	4.56	23.30	4	9	1.80	34.12	12.86	$13.12	$22.32	9.27	152.4	***137.2***
8	28.125	0.27	6	30	136.74	4.56	23.30	4	11	2.20	42.29	14.19	$14.48	$22.32	9.53	156.7	***141.1***
8	28.125	0.27	6	30	136.74	4.56	23.30	4	13	2.60	50.29	15.53	$15.84	$22.32	9.77	160.7	***144.7***
8	28.125	0.27	6	30	136.74	4.56	23.30	5	5	1.55	26.65	12.06	$12.30	$22.32	9.02	148.3	***133.5***
8	28.125	0.27	6	30	136.74	4.56	23.30	5	7	2.17	39.44	14.15	$14.43	$22.32	9.44	155.3	***139.7***
8	28.125	0.27	6	30	136.74	4.56	23.30	5	9	2.79	51.88	16.23	$16.56	$22.32	9.82	161.5	***145.4***
8	28.125	0.27	6	30	136.74	4.56	23.30	5	11	3.41	63.94	18.32	$18.69	$22.32	10.17	167.2	***150.5***
8	28.125	0.27	6	30	136.74	4.56	23.30	5	13	4.03	75.12	20.41	$20.81	$22.32	10.47	172.2	***155.0***
8	28.125	0.27	6	30	136.74	4.56	23.30	6	5	2.20	37.41	14.36	$14.64	$22.32	9.37	154.2	***138.8***
8	28.125	0.27	6	30	136.74	4.56	23.30	6	7	3.08	55.03	17.36	$17.71	$22.32	9.91	163.0	***146.7***
8	28.125	0.27	6	30	136.74	4.56	23.30	6	9	3.96	71.62	20.36	$20.77	$22.32	10.38	170.7	***153.6***
8	28.125	0.27	6	30	136.74	4.56	23.30	6	11	4.84	86.76	23.37	$23.84	$22.32	10.77	177.2	***159.5***
8	28.125	0.27	6	30	136.74	4.56	23.30	6	13	5.72	101.56	26.37	$26.90	$22.32	11.14	183.2	***164.9***
8	28.125	0.27	6	36	136.74	3.80	19.47	3	5	0.55	9.62	7.59	$7.74	$22.32	8.47	116.4	***104.8***
8	28.125	0.27	6	36	136.74	3.80	19.47	3	7	0.77	14.35	8.34	$8.50	$22.32	8.68	119.3	***107.4***
8	28.125	0.27	6	36	136.74	3.80	19.47	3	9	0.99	19.06	9.09	$9.27	$22.32	8.88	122.1	***109.9***
8	28.125	0.27	6	36	136.74	3.80	19.47	3	11	1.21	23.71	9.84	$10.04	$22.32	9.08	124.8	***112.3***
8	28.125	0.27	6	36	136.74	3.80	19.47	3	13	1.43	28.32	10.59	$10.80	$22.32	9.26	127.3	***114.6***
8	28.125	0.27	6	36	136.74	3.80	19.47	4	5	1.00	17.35	9.05	$9.23	$22.32	8.81	121.1	***109.0***
8	28.125	0.27	6	36	136.74	3.80	19.47	4	7	1.40	25.82	10.38	$10.59	$22.32	9.16	125.9	***113.3***
8	28.125	0.27	6	36	136.74	3.80	19.47	4	9	1.80	34.12	11.72	$11.95	$22.32	9.48	130.3	***117.3***
8	28.125	0.27	6	36	136.74	3.80	19.47	4	11	2.20	42.29	13.05	$13.31	$22.32	9.78	134.5	***121.0***
8	28.125	0.27	6	36	136.74	3.80	19.47	4	13	2.60	50.29	14.39	$14.68	$22.32	10.06	138.3	***124.5***
8	28.125	0.27	6	36	136.74	3.80	19.47	5	5	1.55	26.65	10.92	$11.14	$22.32	9.19	126.4	***113.7***
8	28.125	0.27	6	36	136.74	3.80	19.47	5	7	2.17	39.44	13.01	$13.27	$22.32	9.68	133.1	***119.7***
8	28.125	0.27	6	36	136.74	3.80	19.47	5	9	2.79	51.88	15.09	$15.39	$22.32	10.11	139.0	***125.1***
8	28.125	0.27	6	36	136.74	3.80	19.47	5	11	3.41	63.94	17.18	$17.52	$22.32	10.51	144.4	***130.0***
8	28.125	0.27	6	36	136.74	3.80	19.47	5	13	4.03	75.12	19.26	$19.65	$22.32	10.85	149.2	***134.3***
8	28.125	0.27	6	36	136.74	3.80	19.47	6	5	2.20	37.41	13.22	$13.48	$22.32	9.61	132.0	***118.8***
8	28.125	0.27	6	36	136.74	3.80	19.47	6	7	3.08	55.03	16.22	$16.54	$22.32	10.22	140.5	***126.4***
8	28.125	0.27	6	36	136.74	3.80	19.47	6	9	3.96	71.62	19.22	$19.61	$22.32	10.75	147.7	***133.0***
8	28.125	0.27	6	36	136.74	3.80	19.47	6	11	4.84	86.76	22.23	$22.67	$22.32	11.20	153.9	***138.5***
8	28.125	0.27	6	36	136.74	3.80	19.47	6	13	5.72	101.56	25.23	$25.74	$22.32	11.61	159.5	***143.6***

White Text - inadequate temperature and shrinkage steel
Italic Text - inadequate structural capacity
Highlighted Row - good design – valid for use

1 in. = 25.4 mm
1 ft = 0.3048 m
1 kip = 4.448 kN

Appendix C. Torsion Reinforcement Design in Footer – End Section

End Section Yield Line Values for Selected Design (Design A):

$M_c = 47.75$ (*k-ft / ft*)

$L_{CR} = 8.68$ (*ft*)

Torsion Moment:

$T = M_c * L_{CR}$

$T = 47.75$ (*k-ft / ft*) * 8.68 (*ft*) * 12 (*in/ft*)

$T = 4974$ *k-in*

Safety Factor, $\Phi = 0.75$ for torsion

$T_n = T / 0.75$

$T_n = 6632$ (*k-in*)

Torsion capacity of concrete

$$T_c = kx^2 y v_{tc}$$

Limiting pure torsion shear stress of concrete

$$v_{tc} = 6\sqrt{f'c}$$

$$v_{tc} = \frac{6\sqrt{4(ksi) * 1000(psi / ksi)}}{1000(psi / ksi)}$$

$v_{tc} = .3795$ (*ksi*)

Coefficient k

k = 0.133

Dimensions of Footer

Depth = x = Short Side = 24 (*in*)

Width = y = Long Side = 48 (*in*)

Torsion Capacity of Concrete

$$T_c = kx^2 y v_{tc}$$

$T_c = 0.133 * 24^2\ (in^2) * 48\ (in) * 0.3795\ (ksi)$

$T_c = 1396\ (k\text{-}in)$

Torsion capacity required from stirrups

$T_s = T_n - T_c$

$T_s = 6632\ (k\text{-}in) - 1396\ (k\text{-}in)$

$T_s = 5236\ \ (k\text{-}in)$

Stirrup Design

$$A_o = 0.85 * x_o y_o$$

$$x_o = 24(in) - 2 * 2.5(in - \text{cov}er) - 2 * 0.75(in - stirrup_radius)$$
$$x_o = 17.5(in)$$
$$y_o = 48(in) - 2 * 2.5(in) - 2 * 0.5(in)$$
$$y_o = 42(in)$$

$$A_o = 0.85 * x_x * y_o$$
$$A_o = 625(in^2)$$

$$\frac{A_t}{S} = \frac{T_s}{2A_o f_y}$$
$$\frac{A_t}{S} = \frac{5236(k - in)}{2 * 625(in^2) * 60(ksi)}$$
$$\frac{A_t}{S} = 0.0698(in^2 / in)$$

Use #6 rebar stirrup

$$S = 0.44\ (in^2) / 0.0698\ (in^2 / in)$$

$$S = 6.3\ in$$

<u>Use #6 rebar stirrup at 6 inch spacing</u>

Torsion Longitudinal Reinforcement

$$P_h = 2 * (y_o + x_o)$$

$$P_h = 2 * [17.5\ (in) + 42\ (in)]$$

$$P_h = 119.5\ in$$

$$A_l = \frac{A_t}{S} P_h \frac{f_{yt}}{f_y}$$

$$A_l = 0.0678(in^2 / in) * 119.5(in) \frac{60(ksi)}{60(ksi)}$$

$$A_l = 8.10\ in^2$$

<u>Use 16 #6 bar as longitudinal reinforcement</u>

Longitudinal bars must be placed in all stirrup corners and less than 12 inches apart.

Appendix D. Barrier Design Drawings in English–Units

Figure D-1. Layout for TL-5 Concrete Median Barrier

Figure D-2. TL-5 Concrete Median Barrier Design Details

Figure D-3. TL-5 Concrete Median Barrier End Section Design Details

Figure D-4. TL-5 Concrete Median Barrier Slipform Design Details

Figure D-5. TL-5 Concrete Median Barrier Rebar Design Details

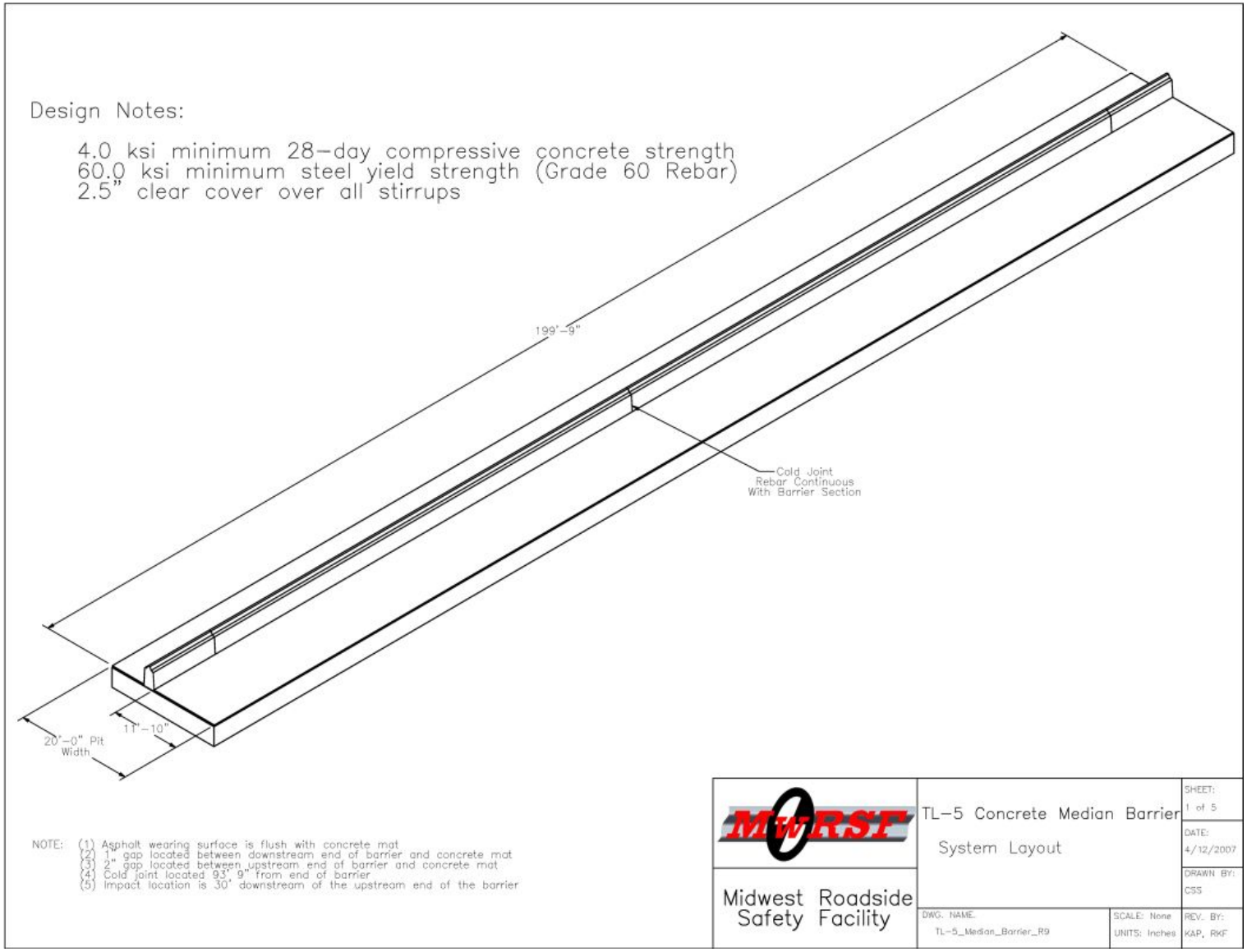

Figure D-1. Layout for TL-5 Concrete Median Barrier

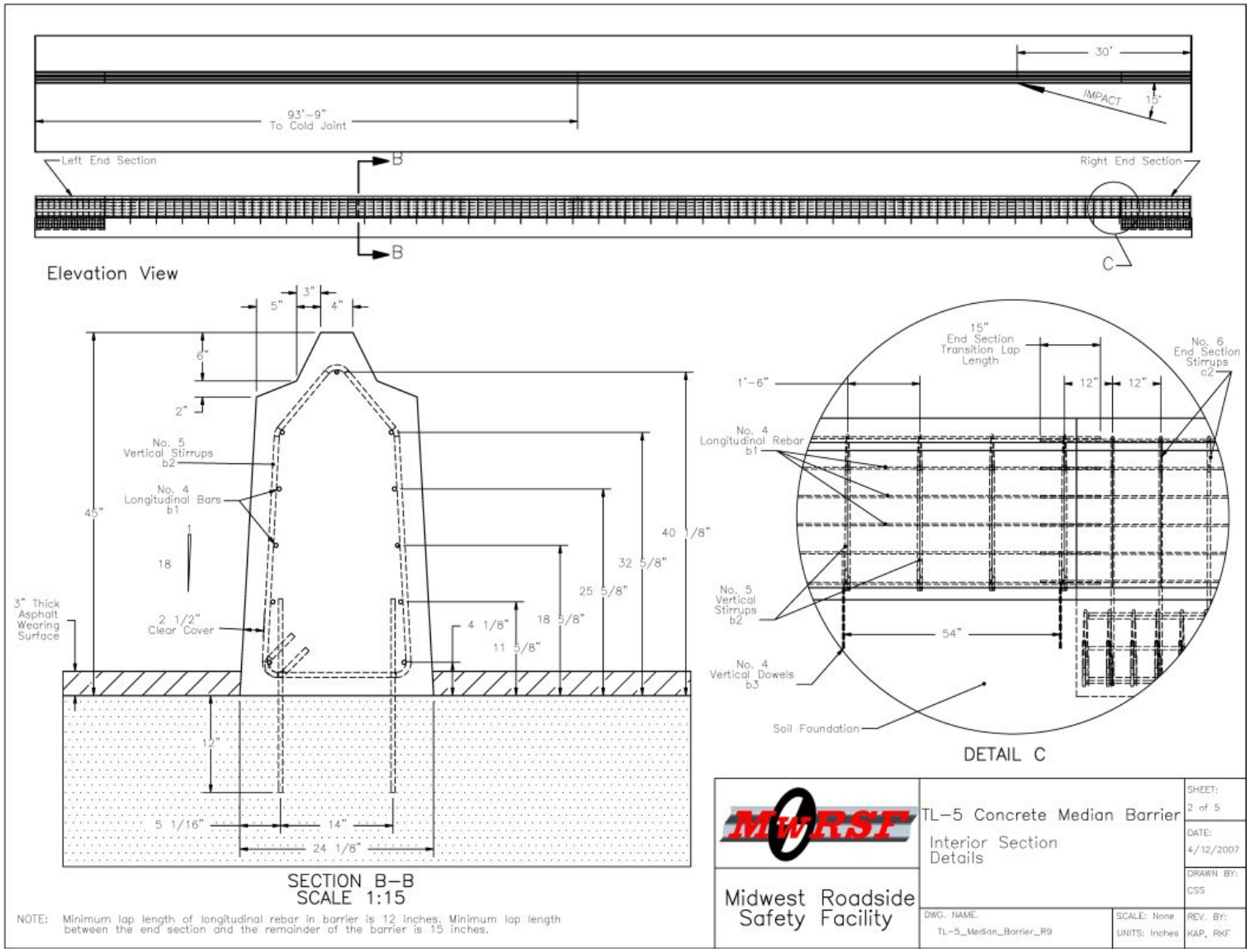

Figure D-2. TL-5 Concrete Median Barrier Design Details

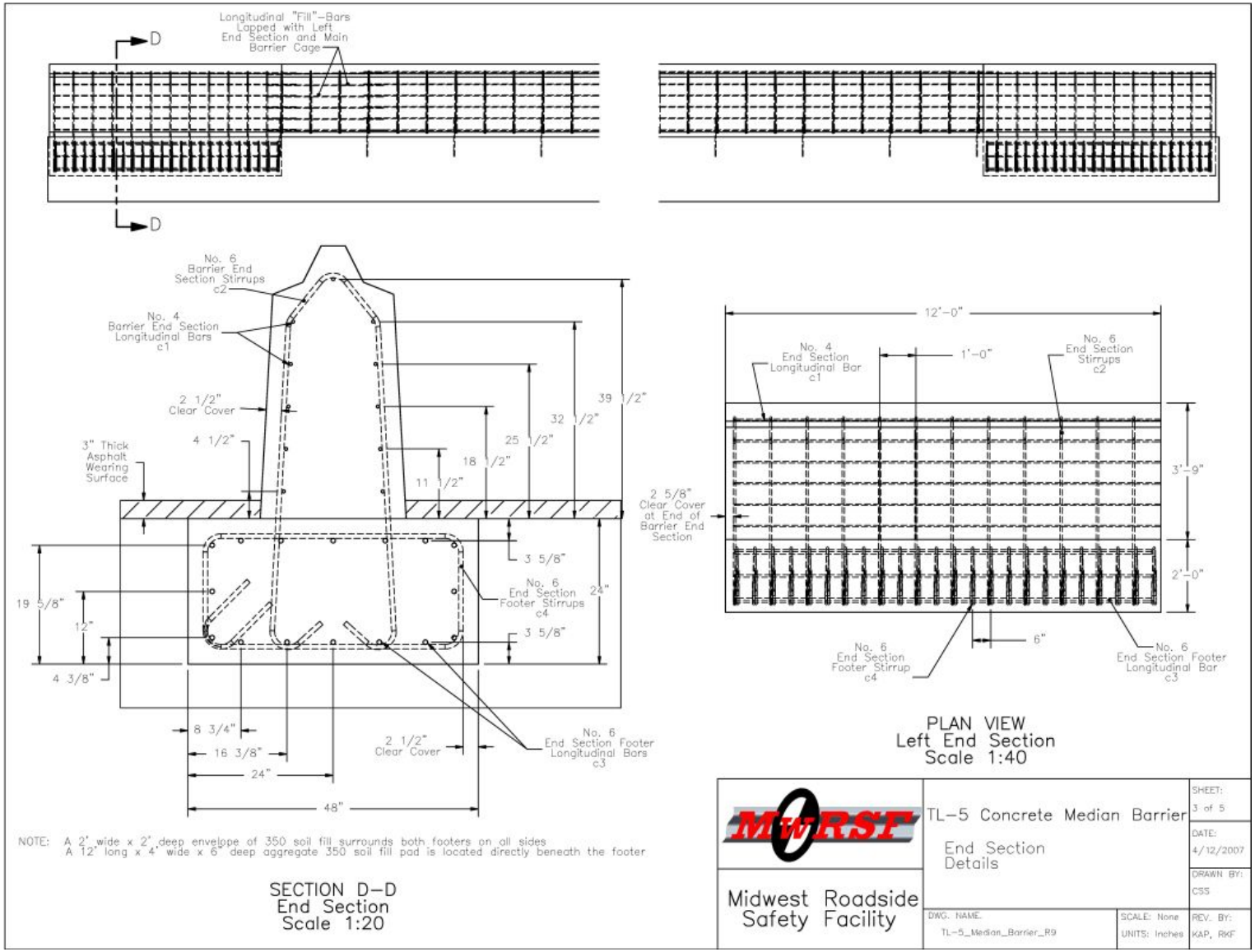

Figure D-3. TL-5 Concrete Median Barrier End Section Design Details

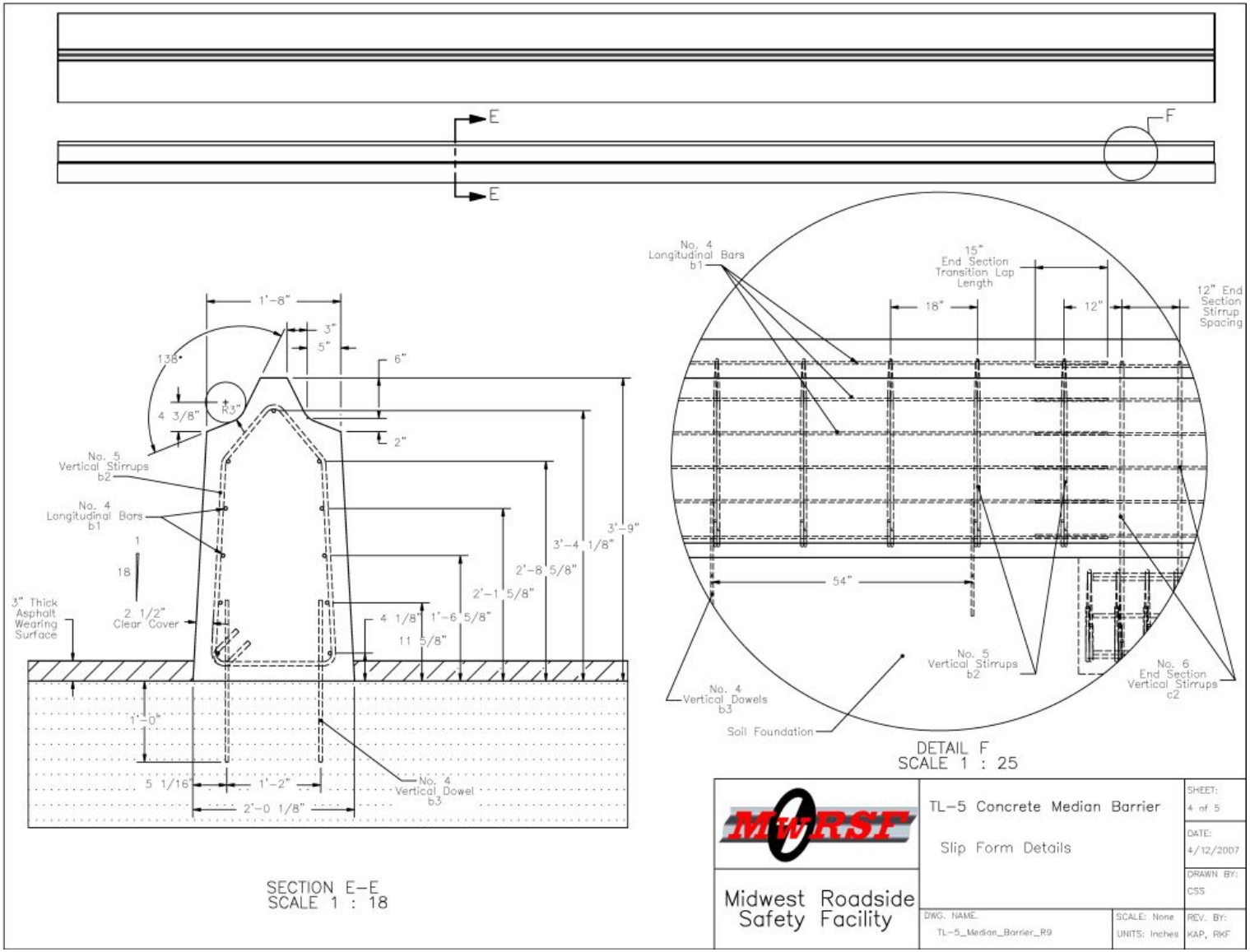

Figure D-4. TL-5 Concrete Median Barrier Slipform Design Details

TL-5 Single-Slope Median Barrier – Bar Details						
Item No.	QTY.	Pin Diameter	Length	Material Spec	Bar Size	Description
b1	99	–	240	Grade 60 Steel	No. 4	Longitudinal Bar, 11 per Section
b2	118	2.5"	111 1/2"	Grade 60 Steel	No. 5	Vertical Stirrup
b3	80	–	24"	Grade 60 Steel	No. 4	Vertical Dowel
b4	11	–	Not less than 72"	Grade 60 Steel	No. 4	Longitudinal "Fill" Bar, spliced with Left End Section and with remaining length of barrier section to close cage
c1	22	–	150"	Grade 60 Steel	No. 4	End Section Longitudinal Bar, 11 per End Section
c2	24	4.5"	147"	Grade 60 Steel	No. 6	End Section Stirrup
c3	32	–	138"	Grade 60 Steel	No. 6	End Section Footer Longitudinal Bar, 16 per End Section
c4	48	4.5"	141"	Grade 60 Steel	No. 6	End Section Footer Stirrup

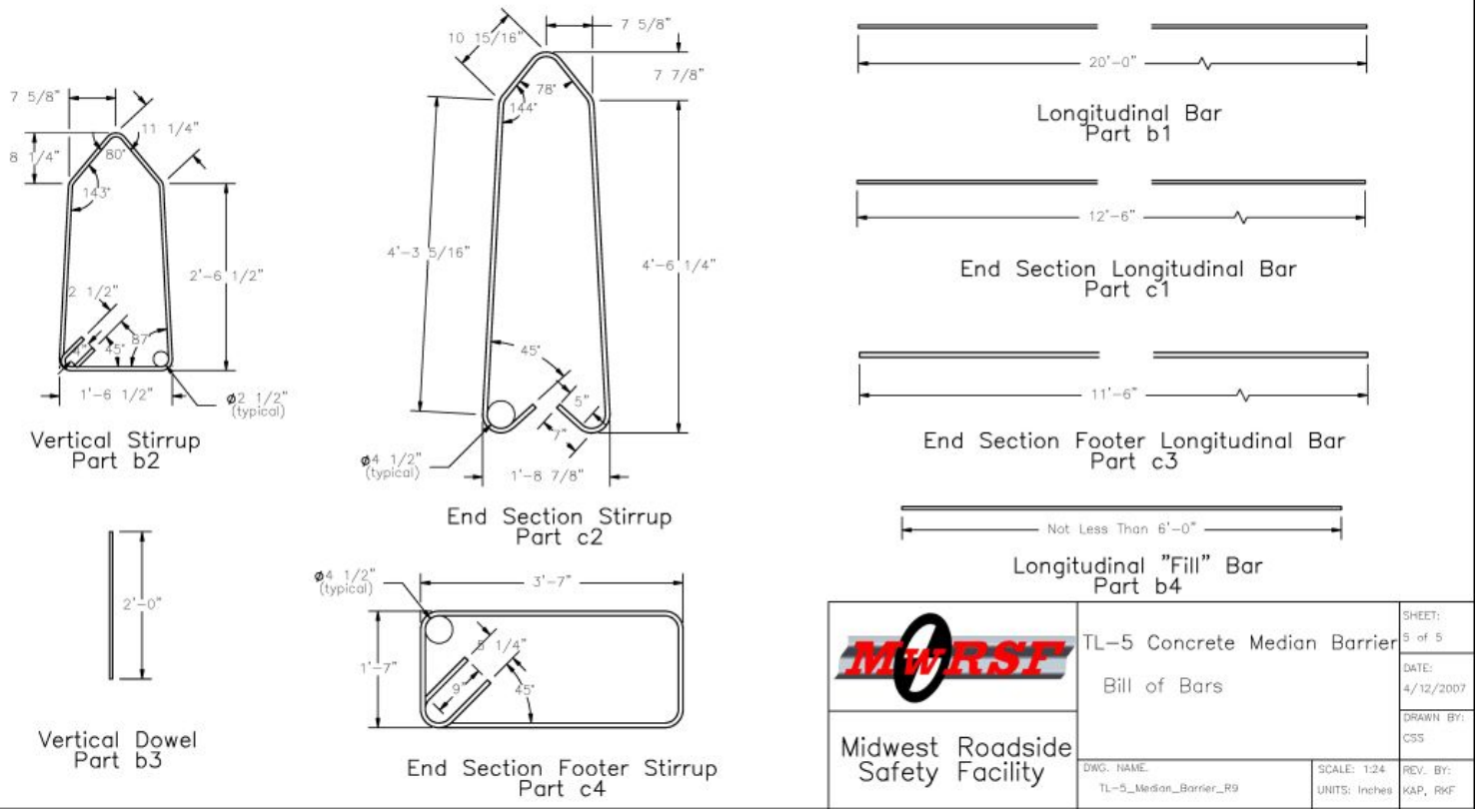

Figure D-5. TL-5 Concrete Median Barrier Rebar Design Details

Appendix E. Summary of Test TL5CMB-2 in English-Units

Figure E-1. Summary of Test Results and Sequential Photographs, Test TL5CMB-2

0.000 sec 0.152 sec 0.224 sec 0.260 sec 0.650 sec

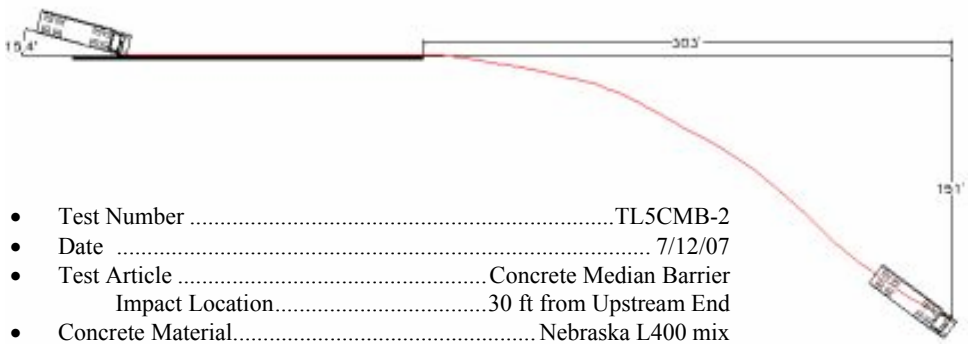

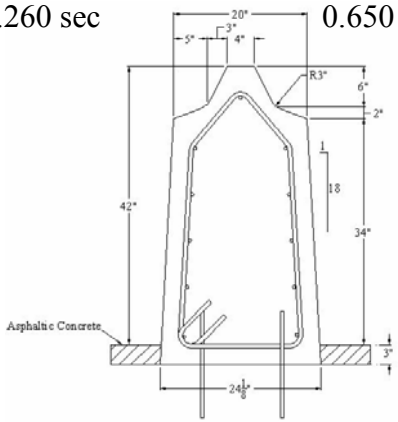

- Test Number TL5CMB-2
- Date 7/12/07
- Test Article .....Concrete Median Barrier
  - Impact Location.....30 ft from Upstream End
- Concrete Material.....Nebraska L400 mix
- Reinforcing Steel Material ..... Grade 60 Rebar
- Concrete Barrier
  - Length .....200 ft
  - Base Width ..... 24.125 in.
  - Height Above Surface ..... 42 in.
  - Total Height..... 45 in.
- Concrete Footers
  - Length ..... 144 in.
  - Width..... 48 in.
  - Thickness..... 24 in.
- Asphalt
  - Thickness..... 3 in.
- Vehicle Model..... 1991 White GMC Tractor
  - .....1988 Pines 48' Trailer
  - Curb..... 28,820 lb
  - Test Inertial ..... 79,705 lb
  - Gross Static ..... 79,705 lb
- Vehicle Speed
  - Impact..... 52.8 mph
  - Exit.....NA
- Vehicle Angle
  - Impact.....15.4 deg
  - Exit.....NA
- Vehicle Stability.....Satisfactory
- Occupant Ridedown Deceleration (10 msec avg.)
  - Longitudinal (Not Required) .....NA
  - Lateral (Not Required).....NA
- Occupant Impact Velocity
  - Longitudinal (Not Required) .....NA
  - Lateral (Not Required).....NA
- Vehicle Damage..... Moderate
  - TAD..... 1-RFQ-5 and 1-RD-5
  - SAE ..... 1-FREN4 and 1-RDES1
- Vehicle Stopping Distance..... 143 m downstream of impact
- Test Article Damage .....Minimal
- Maximum Deflection
  - Permanent Set.....NA
  - Dynamic ..... 1.5 in.
- Working Width ..... 74.5 in.

Figure E-1. Summary of Test Results and Sequential Photographs, Test TL5CMB-2

Appendix F. Accelerometer and Rate Transducer Data, Test TL5CMB-2

Figure F-1. Graph of Longitudinal Deceleration (CFC 60 Filtered) of Trailer, Test TL5CMB-2

Figure F-2. Graph of 50-ms Average Longitudinal Deceleration (CFC 60 Filtered) of Trailer, Test TL5CMB-2

Figure F-3. Graph of Longitudinal Change in Velocity (CFC 180 Filtered) of Trailer, Test TL5CMB-2

Figure F-4. Graph of Lateral Deceleration (CFC 60 Filtered) of Trailer, Test TL5CMB-2

Figure F-5. Graph of 50-ms Average Lateral Deceleration (CFC 60 Filtered) of Trailer, Test TL5CMB-2

Figure F-6. Graph of Lateral Change in Velocity (CFC 180 Filtered) of Trailer, Test TL5CMB-2

Figure F-7. Graph of Vertical Deceleration (CFC 60 Filtered) of Trailer, Test TL5CMB-2

Figure F-8. Graph of 50-ms Average Vertical Deceleration (CFC 60 Filtered) of Trailer, Test TL5CMB-2

Figure F-9. Graph of Vertical Change in Velocity (CFC 180 Filtered) of Trailer, Test TL5CMB-2

Figure F-10. Graph of Trailer Roll, Yaw, and Pitch (Gyro Data), Test TL5CMB-2

Figure F-11. Graph of Tractor Roll, Test TL5CMB-2

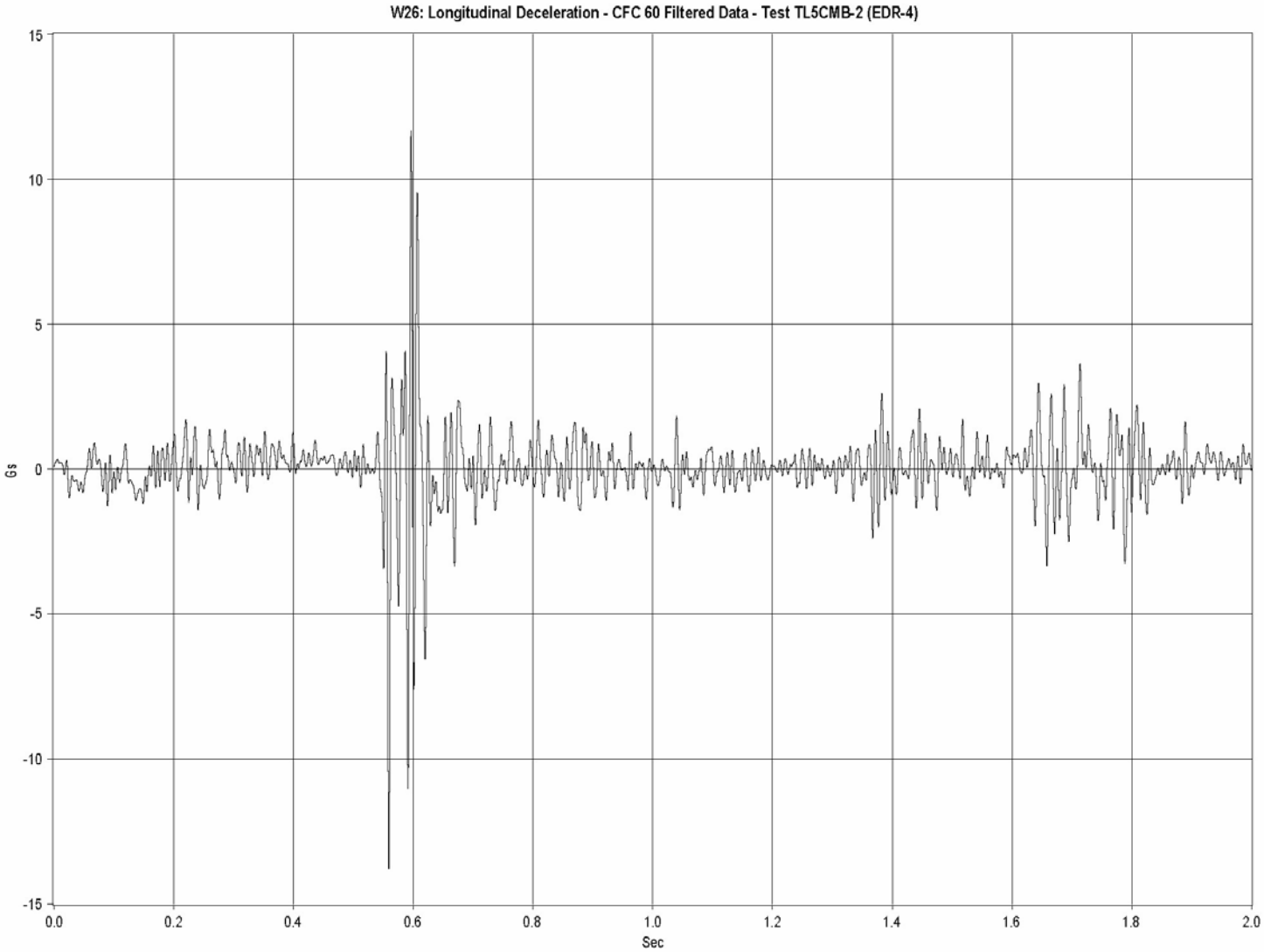

Figure F-1. Graph of Longitudinal Deceleration (CFC 60 Filtered) of Trailer, Test TL5CMB-2

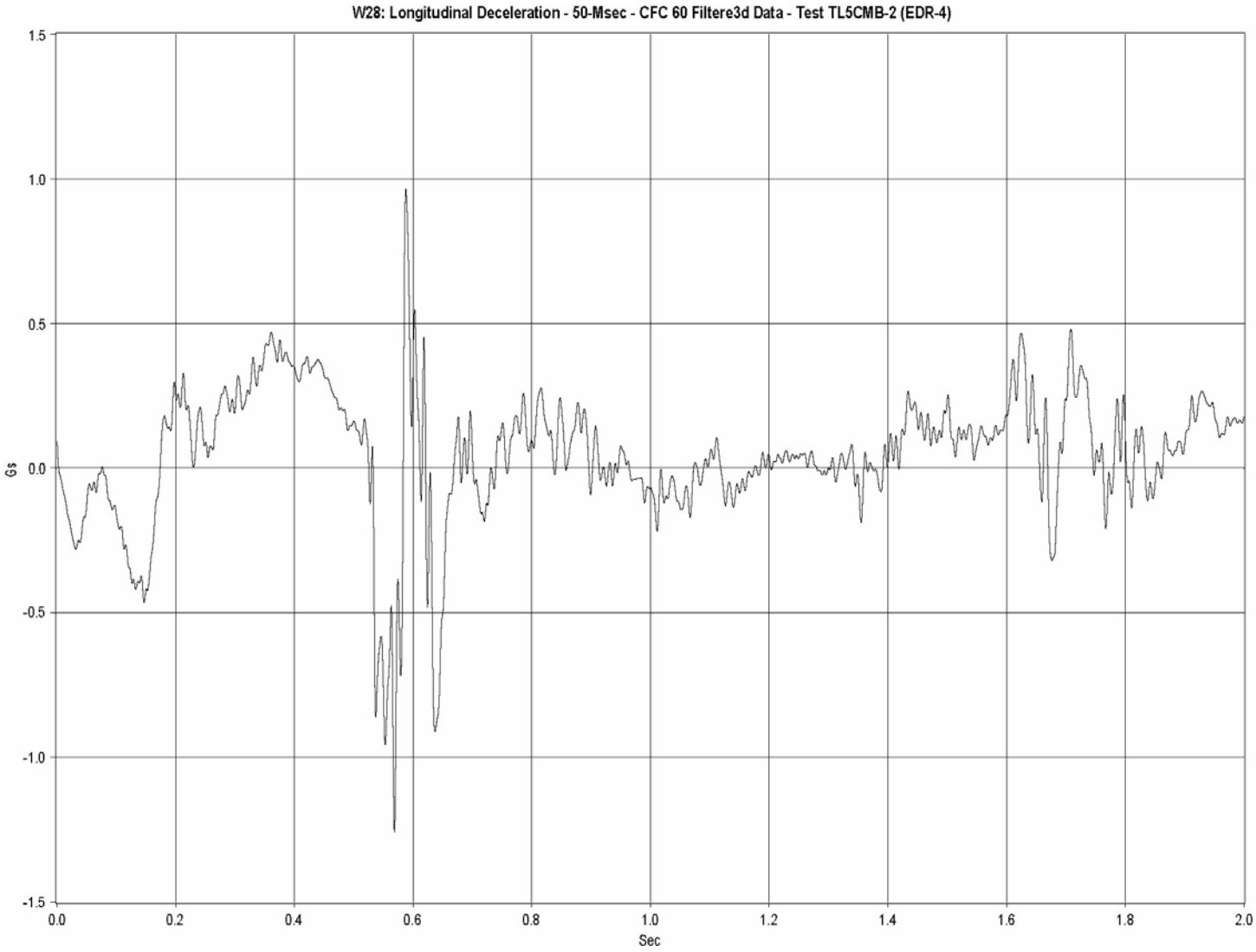

Figure F-2. Graph of 50-ms Average Longitudinal Deceleration (CFC 60 Filtered) of Trailer, Test TL5CMB-2

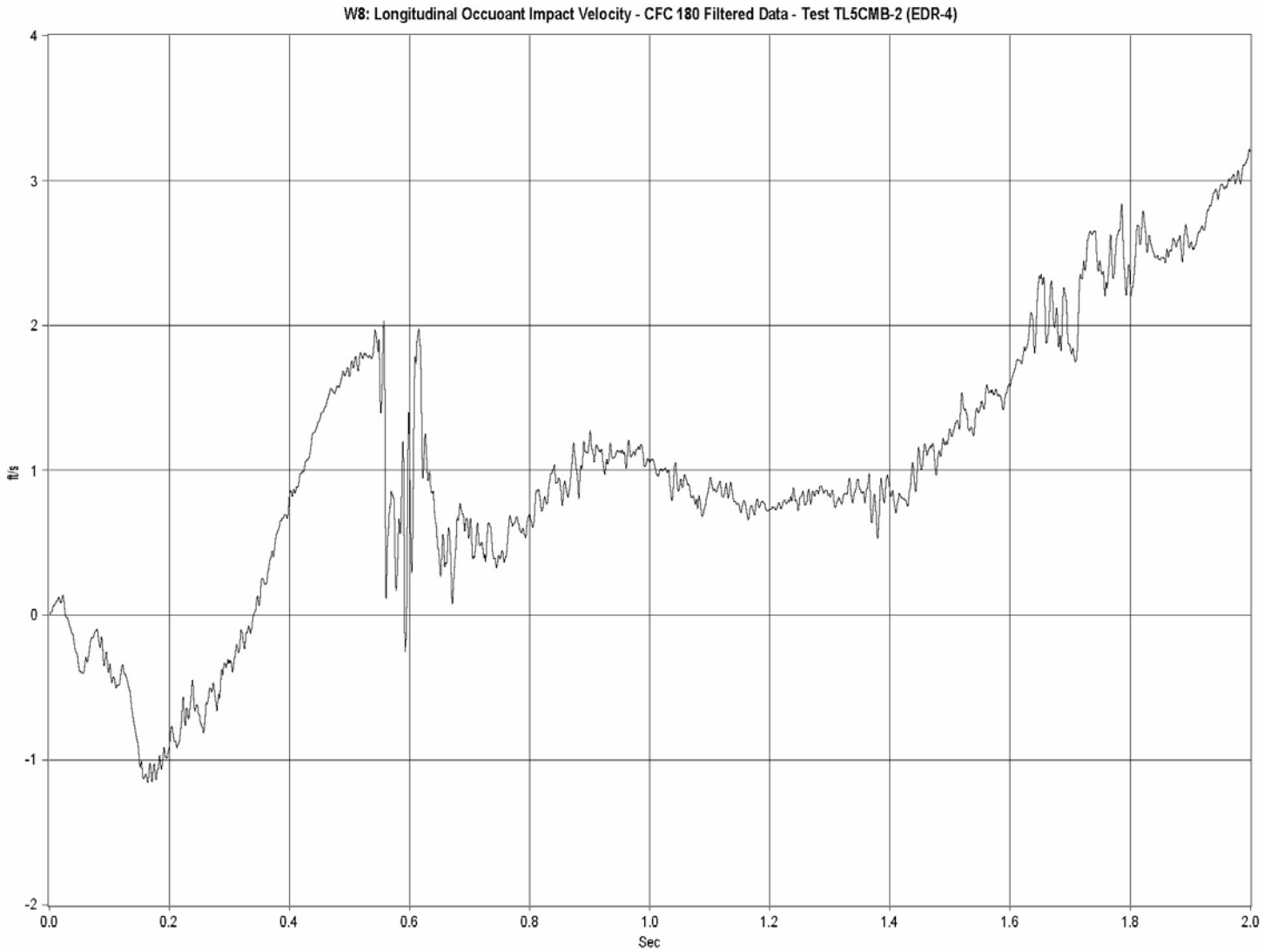

Figure F-3. Graph of Longitudinal Change in Velocity (CFC 180 Filtered) of Trailer, Test TL5CMB-2

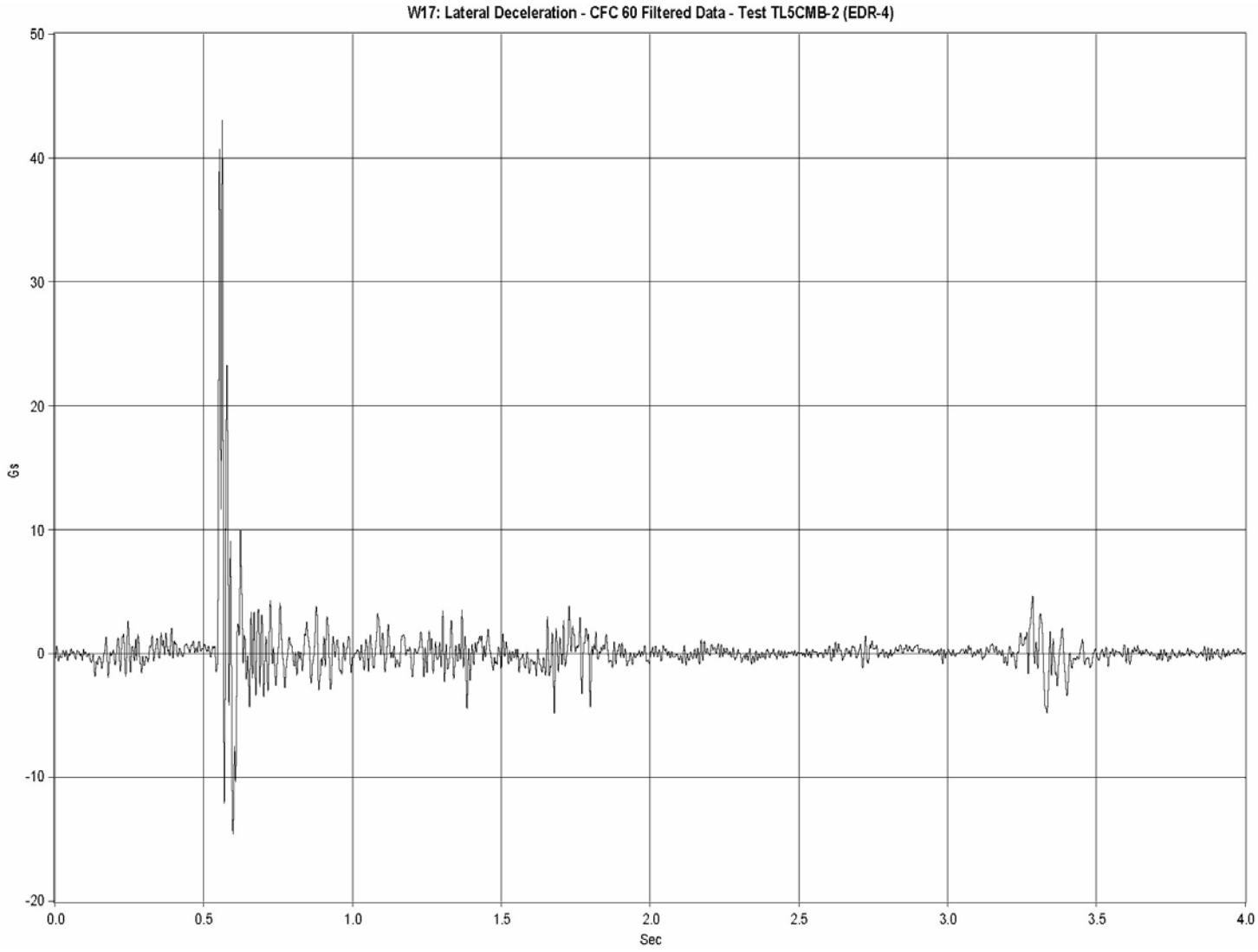

Figure F-4. Graph of Lateral Deceleration (CFC 60 Filtered) of the Trailer, Test TL5CMB-2

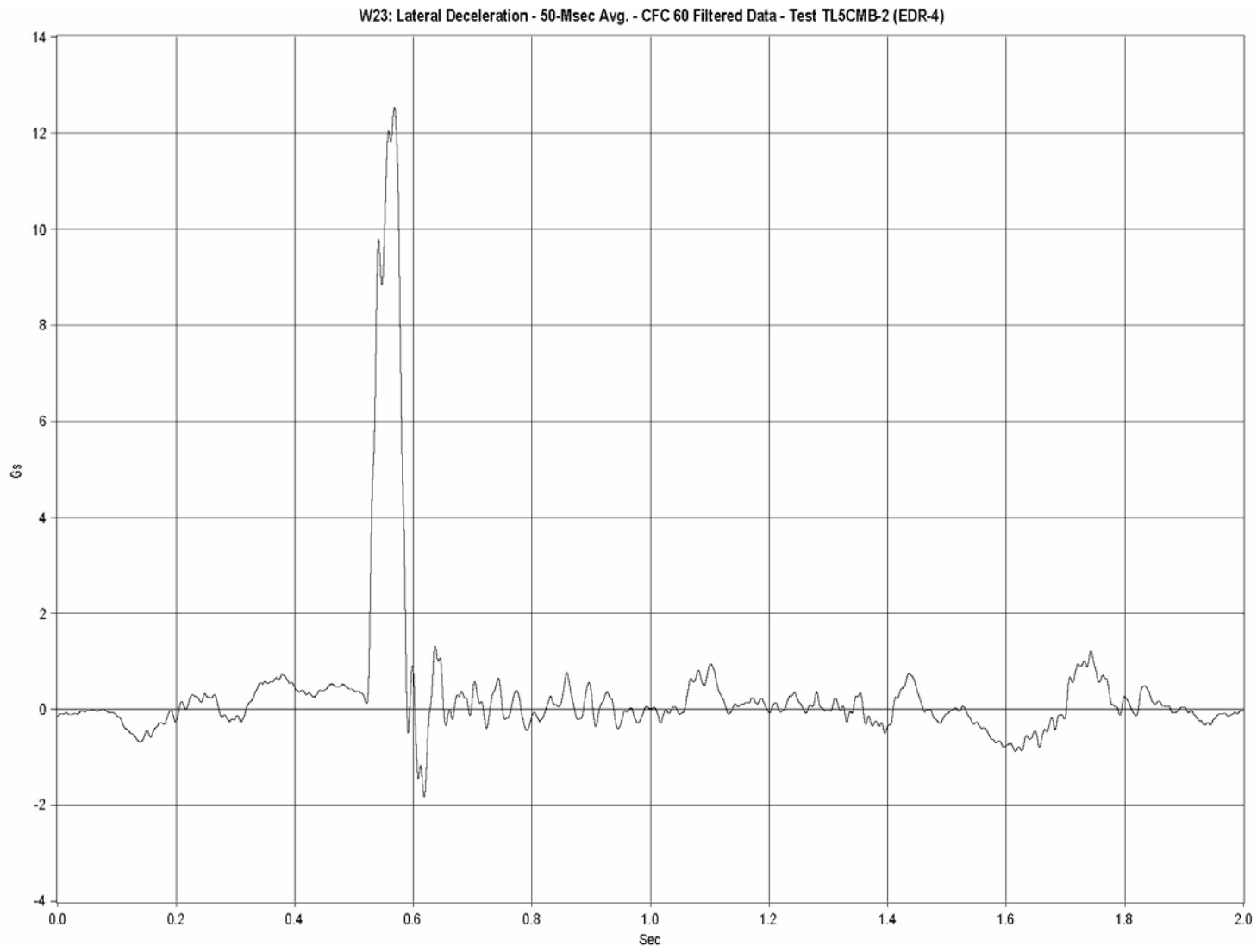

Figure F-5. Graph of 50-ms Average Lateral Deceleration (CFC 60 Filtered) of Trailer, Test TL5CMB-2

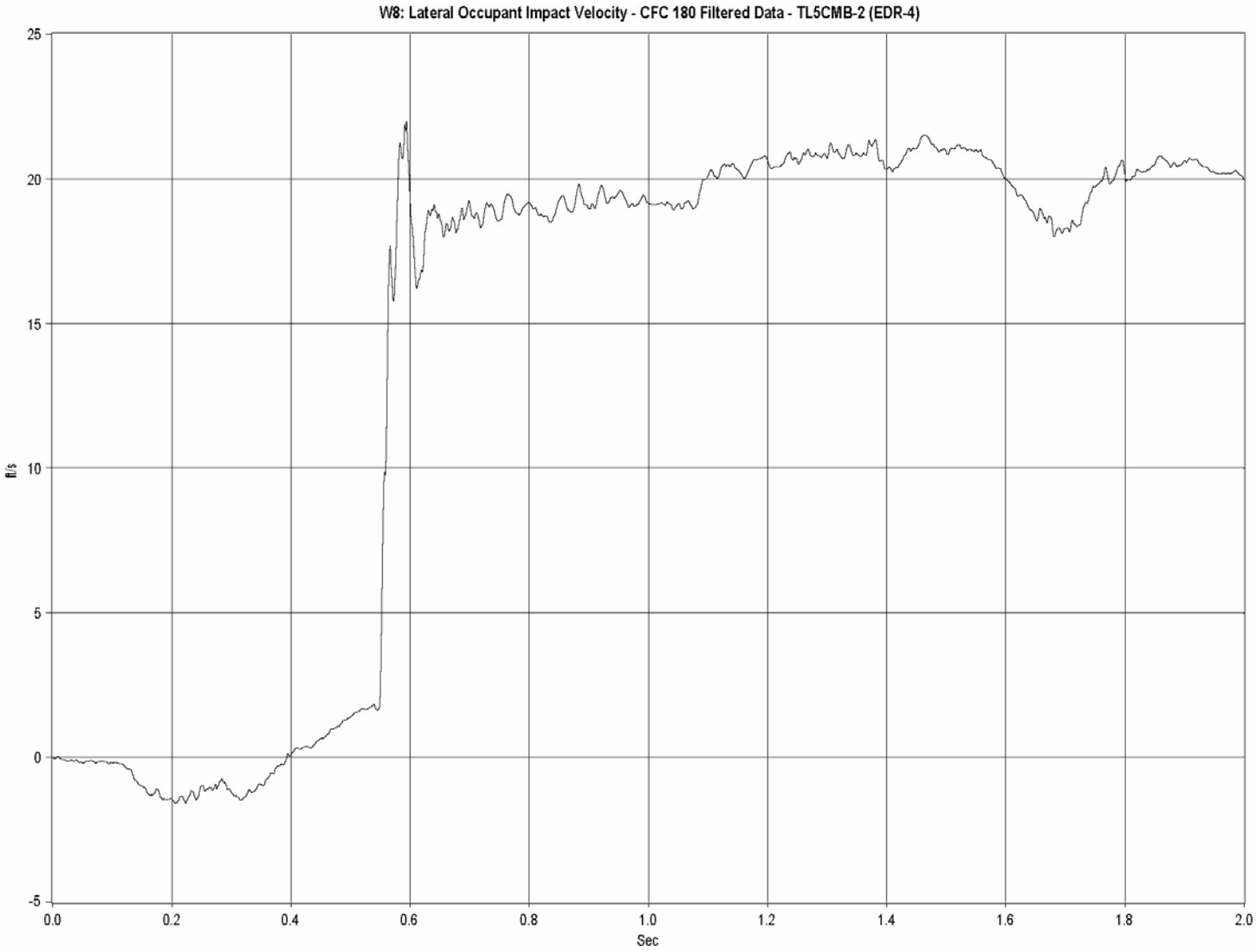

Figure F-6. Graph of Lateral Change in Velocity (CFC 180 Filtered) of Trailer, Test TL5CMB-2

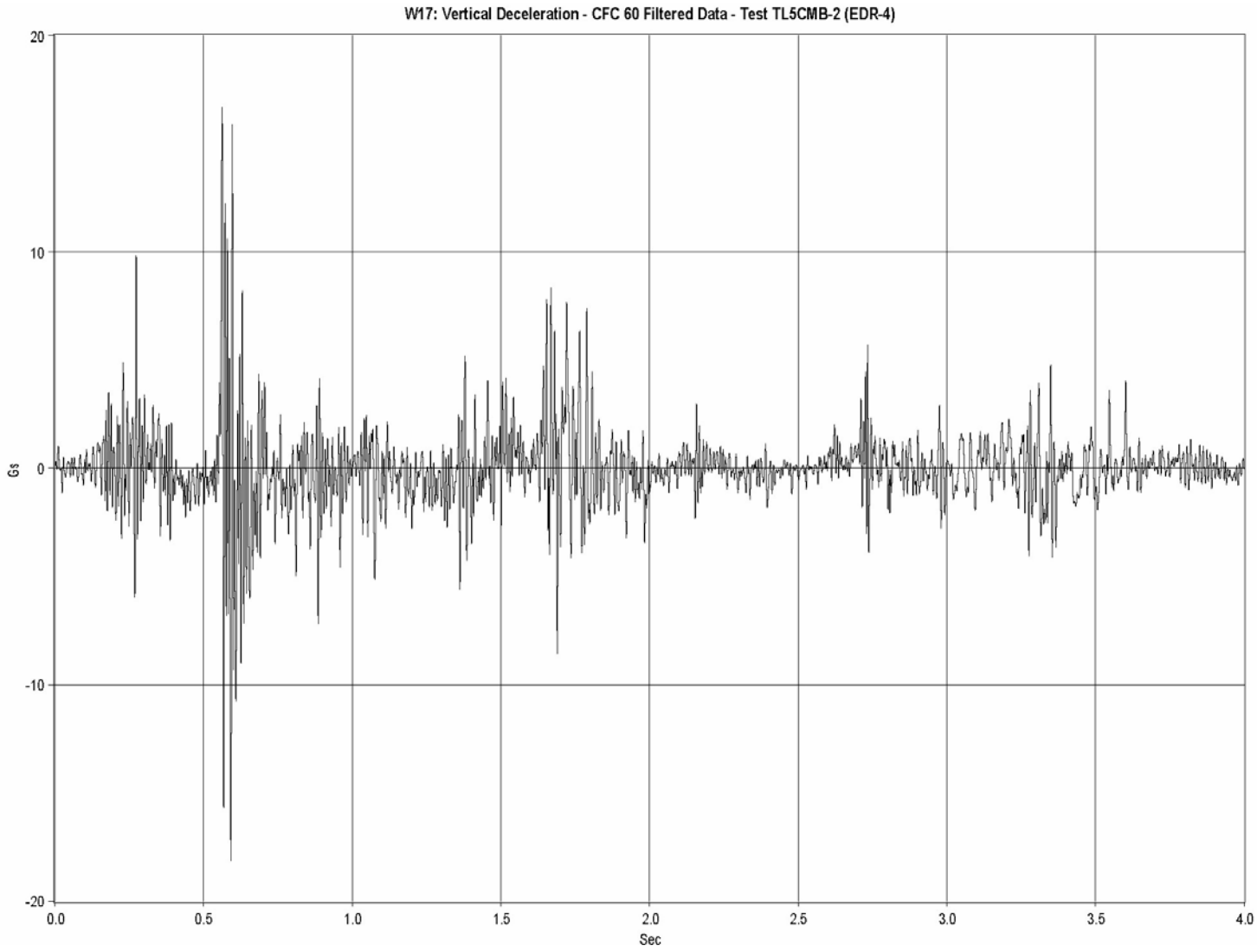

Figure F-7. Graph of Vertical Acceleration (CFC 60 Filtered) of the Trailer, Test TL5CMB-2

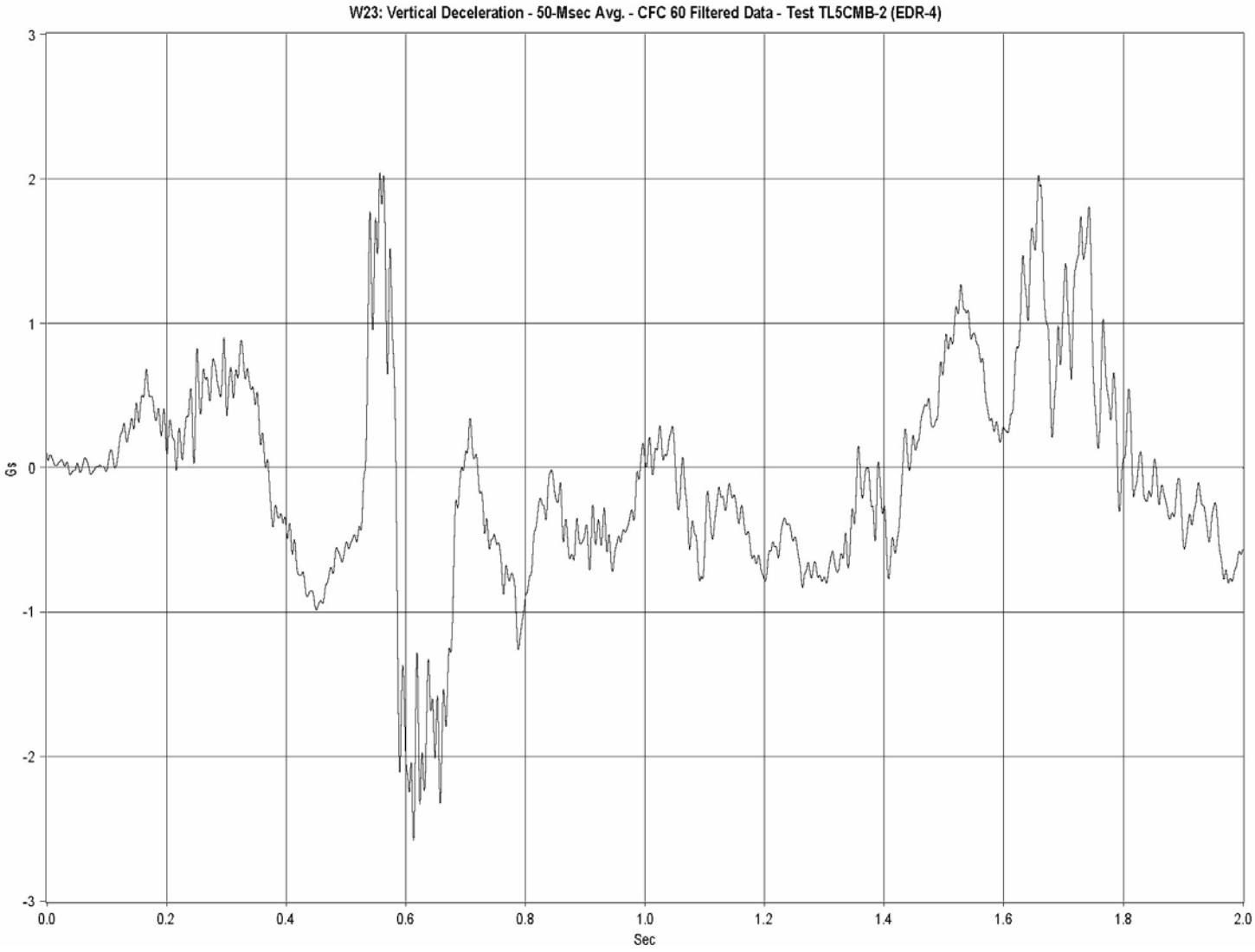

Figure F-8. Graph of 50-ms Average Vertical Deceleration (CFC 60 Filtered) of Trailer, Test TL5CMB-2

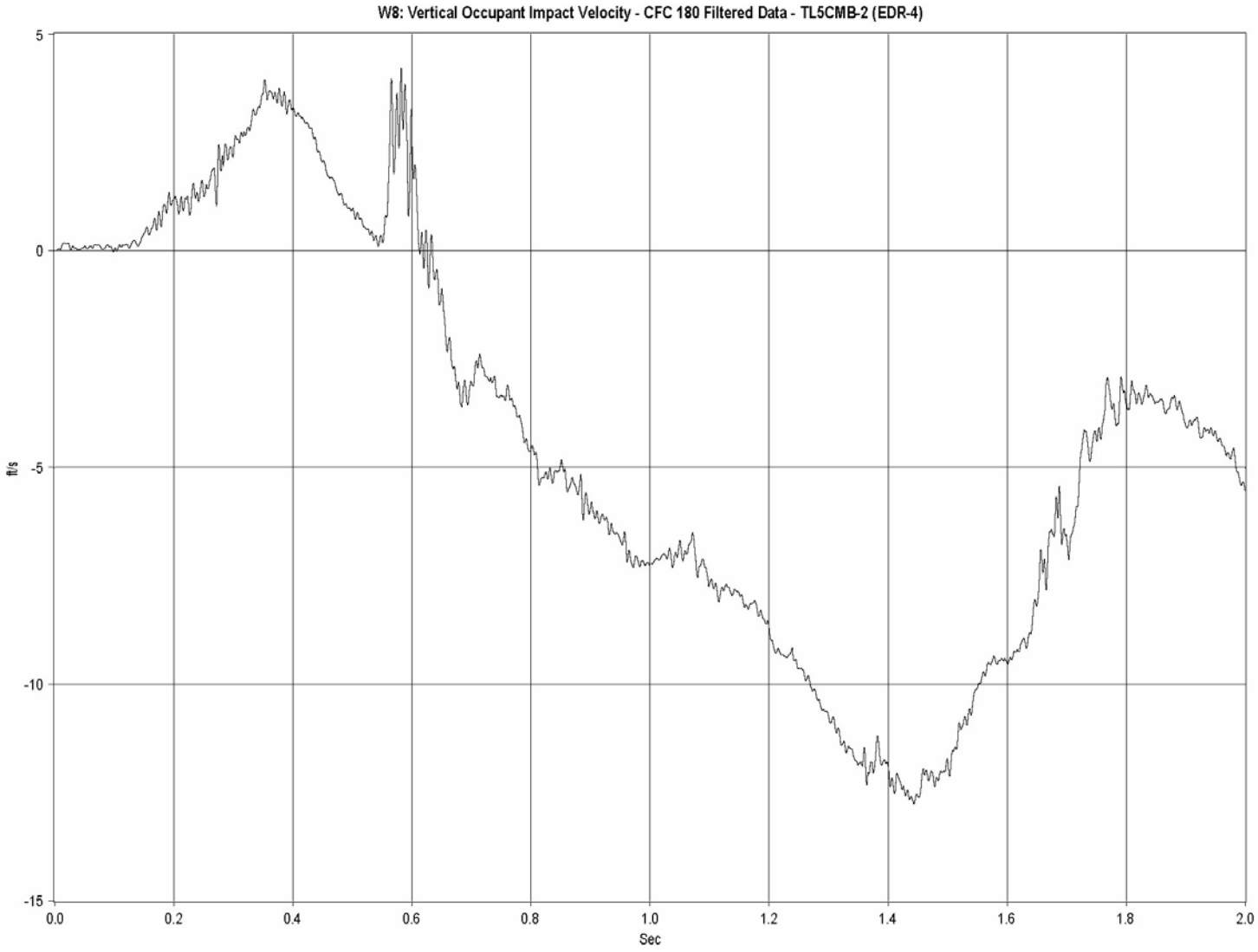

Figure F-9. Graph of Vertical Change in Velocity (CFC 180 Filtered) of Trailer, Test TL5CMB-2

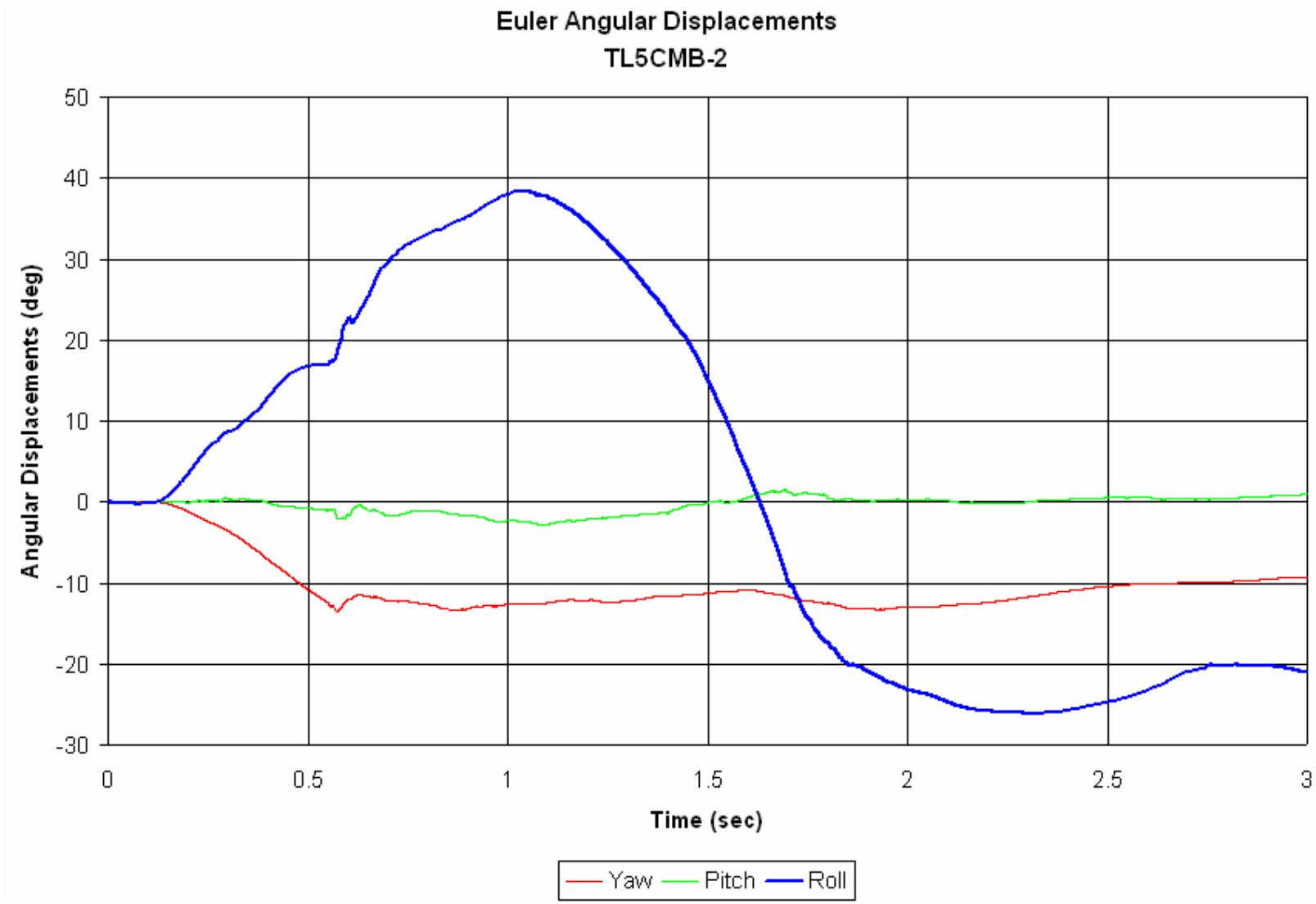

Figure F-10. Graph of Trailer Roll, Yaw, and Pitch (Gyro Data), Test TL5CMB-2

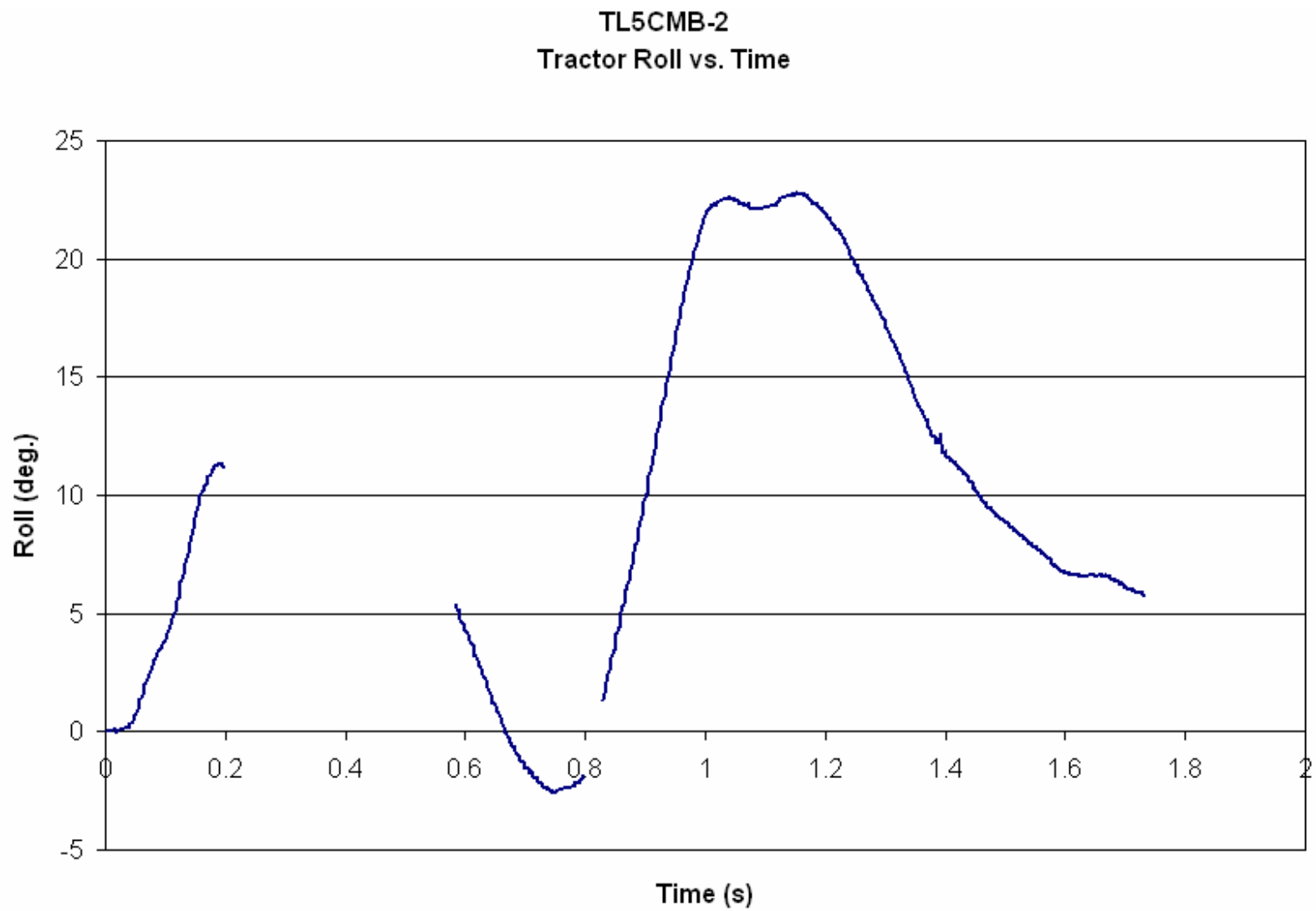

Figure F-11. Graph of Tractor Roll (Film Analysis), Test TL5CMB-2

Appendix G. Alternate Footing Anchorage Design Calculations

FOOTER ANCHORAGE DESIGN

(Design A) #5 Stirrup @ 18" and 11 #4 Longitudinal Bars

$M_c = 23.11$ (k-ft/ft)

$L_{cr} = 14.67$ (ft)

Torsion = $M_c * L_{cr}$

= 339 (k-ft)

= 4068 (k-in.)

Apply factor of $\Phi = 0.75$ and divide by two for the two load path directions

$$T_n = \frac{T}{\Phi * 2} = \frac{4068}{0.75 * 2}$$

$T_n = 2712$ (k-in.)

Torsion Capacity of Concrete

$$T_c = kx^2 y v_{tc}$$

Limiting pure torsion shear stress of concrete (4000 psi concrete)

$$v_{tc} = 6\sqrt{f'c}$$

$$v_{tc} = 0.3795\ (ksi)$$

coefficient k

k = 0.133

Dimensions of Footer (Assume footer is 28" x 32")

Depth = x = Short Side = 28 (*in*)

Width = y = Long Side = 32 (*in*)

$T_c = (0.133)(28)^2(32)(0.3795)$

$T_c = 1266$ (k-in.)

Torsion Steel Needed

$T_s = T_n - T_c$

$T_s = 1446$ (k-in.)

Assume #6 Stirrup and use 2.5" clear cover

$x_o = 22.25$ (in.)

$y_o = 26.25$ (in.)

$A_o = 0.85*(x_o * y_o) = 496.5$ (in^2)

$$\frac{A_t}{S} = \frac{T_s}{2A_o f_y} = 0.0243_(in^2 / in)$$

A = 0.44 in^2 for #6 bar

S = 0.44 / 0.0243 = 18.11 (in.)

<u>Footer Stirrup is #6 Spaced 18" c-c</u>

Longitudinal Steel

$P_h = 2(x_o + y_o)$

$P_h = 97$ (in.)

$$A_l = \frac{A_t}{S} P_h \frac{f_{yt}}{f_y}$$

$A_l = 2.35$ (in^2)

<u>Longitudinal Steel 8 #5 Bars</u>

Remember, longitudinal steel must be located at each corner of the footer stirrups and never more than 12 in. apart. Also, the stirrup must be cast into the footer with a proper development length, whether the stirrup is straight or hooked, to ensure complete development of the rebar.