COMPLIANCE TESTING OF IOWA'S SKID-MOUNTED SIGN DEVICE

Submitted by

Karla A. Polivka, B.S.M.E., E.I.T.
Graduate Research Assistant

Ronald K. Faller, Ph.D., P.E.
Research Assistant Professor

John R. Rohde, Ph.D., P.E.
Associate Professor

James C. Holloway, M.S.C.E., E.I.T.
Research Associate Engineer

Dean L. Sicking, Ph.D., P.E.
MwRSF Director and Associate Professor

MIDWEST ROADSIDE SAFETY FACILITY
University of Nebraska-Lincoln
1901 "Y" Street, Building "C"
Lincoln, Nebraska 68588-0601
(402) 472-6864

Submitted to

Iowa Department of Transportation
800 Lincoln Way
Ames, IA 50010

MwRSF Research Report No. TRP-03-86-99

Technical Report Documentation Page

1. Report No.	2.	3. Recipient's Accession No.
4. Title and Subtitle Compliance Testing of Iowa's Skid-Mounted Sign Device		5. Report Date July 23, 1999 6.
7. Author(s) Polivka, K.A., Faller, R.K., Rohde, J.R., Holloway, J.C., and Sicking, D.L.		8. Performing Organization Report No. TRP-03-86-99
9. Performing Organization Name and Address Midwest Roadside Safety Facility (MwRSF) University of Nebraska-Lincoln 1901 Y St., Bldg. C Lincoln, NE 68588-0601		10. Project/Task/Work Unit No. 11. Contract © or Grant (G) No.
12. Sponsoring Organization Name and Address Iowa Department of Transportation 800 Lincoln Way Ames, IA 50010		13. Type of Report and Period Covered Final Report 1999 14. Sponsoring Agency Code
15. Supplementary Notes		

16. Abstract (Limit: 200 words)

A wide variety of traffic control devices are used in work zones, some of which are not normally found on the roadside or in the traveled way outside of the work zones. These devices are used to enhance the safety of the work zones by controlling the traffic through these areas. Due to the placement of the traffic control devices, the devices themselves may be potentially hazardous to both workers and errant vehicles. The impact performance of many work zone traffic control devices is mainly unknown and to date limited crash testing has been conducted under the criteria of National Cooperative Highway Research Program (NCHRP) Report No. 350, *Recommended Procedures for the Safety Performance Evaluation of Highway Features*.

The objective of the study was to evaluate the safety performance of existing skid-mounted sign supports through full-scale crash testing. Two full-scale crash tests were conducted on skid-mounted sign supports to determine their safety performance according to the Test Level 3 (TL-3) criteria set forth in the NCHRP Report No. 350. The safety performance evaluations indicate that these skid-mounted sign supports did not perform satisfactorily in the full-scale crash tests. The results of the crash tests were documented, and conclusions and recommendations pertaining to the safety performance of the existing work zone traffic control devices were made.

17. Document Analysis/Descriptors		18. Availability Statement
Highway Safety, Work Zone Safety, Skid-Mounted Sign Support,	Roadside Appurtenances, Crash Test, Compliance Test	No restrictions. Document available from: National Technical Information Services, Springfield, Virginia 22161

19. Security Class (this report)	20. Security Class (this page)	21. No. of Pages	22. Price
Unclassified	Unclassified	48	

DISCLAIMER STATEMENT

The contents of this report reflect the views of the authors who are responsible for the facts and the accuracy of the data presented herein. The contents do not necessarily reflect the official views or policies of the Federal Highway Administration nor the Iowa Department of Transportation. This report does not constitute a standard, specification, or regulation.

ACKNOWLEDGMENTS

The authors wish to acknowledge several sources that made a contribution to this project: (1) Iowa Department of Transportation for donating the signs and for sponsoring this project; and (2) MwRSF personnel for conducting the crash tests.

A special thanks is also given to the following individuals who made a contribution to the completion of this research project.

Midwest Roadside Safety Facility

J.D. Reid, Ph.D., Associate Professor, Mechanical Engineering Department
K.L. Krenk, B.S.M.A., Field Operations Manager
E.A. Keller, B.S.M.E., E.I.T., Research Associate Engineer
M.L. Hanau, Laboratory Mechanic I
Undergraduate and Graduate Assistants

Dunlap Photography

James Dunlap, President and Owner

TABLE OF CONTENTS

Page

TECHNICAL REPORT DOCUMENTATION PAGE i

DISCLAIMER STATEMENT ii

ACKNOWLEDGMENTS iii

TABLE OF CONTENTS iv
List of Figures vi
List of Tables vii

1 INTRODUCTION 1
1.1 Problem Statement 1
1.2 Objective 2
1.3 Scope 2

2 TEST REQUIREMENTS AND EVALUATION CRITERIA 3
2.1 Test Requirements 3
2.2 Evaluation Criteria 3

3 WORK ZONE SKID-MOUNTED SIGN SUPPORTS 6
3.1 Background 6
3.2 General Descriptions 6
3.3 Skid-Mounted Sign Supports 7

4 TEST CONDITIONS 11
4.1 Test Facility 11
4.2 Vehicle Tow and Guidance System 11
4.3 Test Vehicles 11
4.4 Data Acquisition Systems 19
4.4.1 High-Speed Photography 19
4.4.2 Pressure Tape Switches 19

5 CRASH TEST NO. 1 (SYSTEM NO. 1) 21
5.1 Test I-1 21
5.2 Test Description 21
5.3 System and Component Damage 22
5.4 Vehicle Damage 22
5.5 Discussion 23

6 CRASH TEST NO. 2 (SYSTEM NO. 2) 31
6.1 Test I-2 31
6.2 Test Description 31
6.3 System and Component Damage 32
6.4 Vehicle Damage 32
6.5 Discussion 33

7 DISCUSSION 42

8 SUMMARY AND CONCLUSIONS 44

9 RECOMMENDATIONS 46

10 REFERENCES 47

List of Figures

Page

1. System Nos. 1 and 2 Sign Support Details, Tests I-1 and I-2 8
2. System No. 1 Sign, Test I-1 9
3. System No. 2 Sign, Test I-2 10
4. Test Vehicle, Test I-1 12
5. Vehicle Dimensions, Test I-1 13
6. Test Vehicle, Test I-2 15
7. Vehicle Dimensions, Test I-2 16
8. Vehicle Target Locations, Test I-1 17
9. Vehicle Target Locations, Test I-2 18
10. Location of High-Speed Cameras, Tests I-1 and I-2 20
11. Summary of Test Results and Sequential Photographs, Test I-1 24
12. Additional Sequential Photographs, Test I-1 25
13. Impact Location, Test I-1 26
14. System No. 1 Overall Damage, Test I-1 27
15. System No. 1 Damage, Test I-1 28
16. Vehicle Damage, Test I-1 29
17. Vehicle and Windshield Damage, Test I-1 30
18. Summary of Test Results and Sequential Photographs, Test I-2 34
19. Additional Sequential Photographs, Test I-2 35
20. Impact Location, Test I-2 36
21. System No. 2 Overall Damage, Test I-2 37
22. System No. 2 Damage, Test I-2 38
23. System No. 2 Damage, Test I-2 39
24. Vehicle Damage, Test I-2 40
25. Vehicle Damage, Test I-2 41

List of Tables

Page

1. NCHRP Report 350 Evaluation Criteria for 820C Small Car Crash Test (2) 5
2. Failure Criteria 5
3. List of Crash Tests Conducted 7
4. Summary of Safety Performance Evaluation Results 45

1 INTRODUCTION

1.1 Problem Statement

A wide variety of traffic control devices are used in work zones, some of which are not normally found on the roadside or in the traveled way outside of the work zones. These devices are used to enhance the safety of the work zones by properly controlling the traffic through these areas. Due to the placement of the traffic control devices, the devices themselves may be potentially hazardous to both workers (or bystanders) and errant vehicles. Thus, the Federal Highway Administration (FHWA) and the *Manual on Uniform Traffic Control Devices (MUTCD)* (1) require that work zone traffic control devices must demonstrate acceptable crashworthy performance in order to be used within the roadway on the National Highway System (NHS).

The impact performance of many work zone traffic control devices is mainly unknown and limited crash testing has been conducted in accordance with the guidelines set forth in National Cooperative Highway Research Program (NCHRP) Report No. 350, *Recommended Procedures for the Safety Performance Evaluation of Highway Features* (2). The Texas Department of Transportation (TxDOT) has sponsored a number of studies at the Texas Transportation Institute (TTI) to assess the impact performance of various work zone traffic control devices, including plastic drums, sign substrates, barricades, and temporary sign supports (3-7). Full-scale crash testing on plastic drums, barricades, portable sign supports, and tall-mounted, rigid panel sign supports has also been previously conducted at the University of Nebraska-Lincoln (8-11). The previous studies have provided some useful information, but there remains unanswered questions regarding the performances of many work zone traffic control devices, which are slightly different from those previously crash tested.

1.2 Objective

The objective of the research project was to evaluate the safety performance of an existing skid-mounted sign support device through full-scale crash testing and implement any changes, if necessary, to ensure compliance with the criteria. The safety performance evaluations were conducted according to the Test Level 3 (TL-3) criteria set forth in the NCHRP Report No. 350 (2).

1.3 Scope

The research objective was achieved by performing several tasks. First, two full-scale vehicle crash tests were performed on the skid-mounted work zone traffic control device. The two crash tests were completed in two runs with a center-point impact in each run with the sign oriented parallel and perpendicular to the vehicle's path. The full-scale crash tests were performed using a small car, weighing approximately 820 kg, with target impact speed of 100.0 km/hr and an angle of 0 degrees for the impact. Finally, the test results were analyzed, evaluated, and documented. Conclusions and recommendations were then made that pertain to the safety performance of the existing skid-mounted sign support device.

2 TEST REQUIREMENTS AND EVALUATION CRITERIA

2.1 Test Requirements

Work zone traffic control devices, such as skid-mounted sign supports, purchased after October 2000 must satisfy the requirements provided in NCHRP Report No. 350 to be accepted by FHWA for use on NHS construction projects. According to FHWA's Submission Guidelines attached to the July 1997 memorandum, *Action: Identifying Acceptable Highway Safety Features* (11), work zone traffic control devices are Category 2 devices, which are not expected to produce significant change in vehicular velocity, but may penetrate a windshield, injure a worker, or cause vehicle instability when driven over or lodged under a vehicle. According to TL-3 of NCHRP Report No. 350 and FHWA's Submission Guidelines for acceptable Category 2 devices, work zone traffic control devices must be subjected to two full-scale vehicle crash tests: (1) an 820-kg small car impacting at a speed of 35.0 km/hr and at an angle of 0 degrees; and (2) an 820-kg small car impacting at a speed of 100.0 km/hr and at an angle of 0 degrees. The low-speed test is intended to evaluate the breakaway, fracture, or yielding mechanism of the device and occupant risk factors whereas the high-speed test is intended to evaluate vehicular stability, test article trajectory, and occupant risk factors. Since most work zone traffic control devices have a relatively small mass (less than 45 kg), the high-speed crash test is more critical due to the propensity of the test article to penetrate into the occupant compartment. Therefore, the 820-kg small car crash test, impacting at a speed of 35.0 km/hr and at an angle of 0 degrees was deemed unnecessary for this project.

2.2 Evaluation Criteria

Evaluation criteria for full-scale vehicle crash testing are based on three appraisal areas: (1) structural adequacy; (2) occupant risk; and (3) vehicle trajectory after collision. Criteria for structural

adequacy are intended to evaluate the ability of the work zone traffic control device to break away, fracture, or yield in a predictable manner. Occupant risk evaluates the degree of hazard to occupants in the impacting vehicle, including windshield damage. Vehicle trajectory after collision is a measure of the potential for the post-impact trajectory of the vehicle to cause subsequent multi-vehicle accidents, thereby subjecting occupants of other vehicles to undue hazard or to subject the occupants of the impacting vehicle to secondary collisions with other fixed objects. These three evaluation criteria are defined in Table 1. The full-scale vehicle crash tests were conducted and reported in accordance with the procedures provided in NCHRP Report No. 350 and for Category 2 devices.

Windshield damage is a major area of concern when evaluating the safety performance of a work zone traffic control device. The windshield should not be shattered nor damaged in a way such that visibility is significantly obstructed. Minor chipping and cracking of the windshield is acceptable. Significant loss of visibility due to extensive "spider web" cracking at key regions of the windshield would deem the performance of the device unsatisfactory. Both layers of glass should not be fractured nor indented, indicating the potential for the test article to penetrate the windshield. The five main failure criteria are defined in Table 2.

Table 1. NCHRP Report 350 Evaluation Criteria for 820C Small Car Crash Test (2)

Structural Adequacy	B. The test article should readily activate in a predictable manner by breaking away, fracturing, or yielding.
Occupant Risk	D. Detached elements, fragments or other debris from the test article should not penetrate or show potential for penetrating the occupant compartment, or present an undue hazard to other traffic, pedestrians, or personnel in a work zone. Deformations of, or intrusions into, the occupant compartment that could cause serious injuries should not be permitted.
	E. Detached elements, fragments or other debris from the test article, or vehicular damage should not block the driver's vision or otherwise cause the driver to lose control of the vehicle.
	F. The vehicle should remain upright during and after collision although moderate roll, pitching, and yawing are acceptable.
	H. Longitudinal occupant impact velocities should fall below the preferred value of 3 m/s, or at least below the maximum allowable value of 5 m/s.
	I. Longitudinal and lateral occupant ridedown accelerations should fall below the preferred value of 15 G's, or at least below the maximum allowable value of 20 G's.
Vehicle Trajectory	K. After collision it is preferable that the vehicle's trajectory not intrude into adjacent traffic lanes.
	N. Vehicle trajectory behind the test article is acceptable.

Table 2. Failure Criteria

METHOD OF FAILURE

1 Severe windshield cracking and fracture
2 Windshield indentation
3 Obstruction of driver visibility
4 Windshield penetration
5 Occupant compartment penetration other than windshield penetration

3 WORK ZONE SKID-MOUNTED SIGN SUPPORTS

3.1 Background

To date, there have been four rigid sign panel support devices tested. Successfully tested rigid sign panel support devices include: two devices mounted on skid systems, similar to the Iowa device, and one device that mounted on a sign trailer (5). One rigid sign panel support device mounted on an X-stand did not perform satisfactorily when tested (5). These systems were all tested in the 0 degree orientation. The previously tested systems had significant differences from Iowa's signs. The main differences are the vertical support posts and the mounting height of the sign panel. The systems which have been successfully tested have wooden support posts and top mounting heights which are above 2.84 m (5). In general, signs that rapidly breakaway at the base of the support, and have limited structural rigidity along the face of the sign have performed well (3-11). Rigid sign panels, in general, have had difficulty with the end-on test, with low mounting heights accentuating this problem.

3.2 General Descriptions

A total of two crash tests were performed under this study and are described below. Both of the crash tests were conducted on identical skid-mounted sign supports. All materials for the traffic control devices were supplied by the sponsor.

The skid-mounted sign support tested was:

1. (System Nos. 1 and 2) A skid-mounted fixed sign support with a 1,220-mm x 1,220-mm plywood sign panel with reflective material mounted at a height of 394 mm from the ground to the bottom of the sign panel.

Two crash tests are summarized in Table 3.

Table 3. List of Crash Tests Conducted

WORK ZONE TRAFFIC CONTROL DEVICES		
SKID-MOUNTED SIGN SUPPORTS		
Test I-1	System No. 1	Skid-Mounted Sign Support, Plywood Sign Panel with Reflective Material, Side Impact (90 degrees)
Test I-2	System No. 2	Skid-Mounted Sign Support, Plywood Sign Panel with Reflective Material, Head-on Impact (0 degrees)

3.3 Skid-Mounted Sign Supports

The skid-mounted sign support system details are shown in Figures 1 through 3.

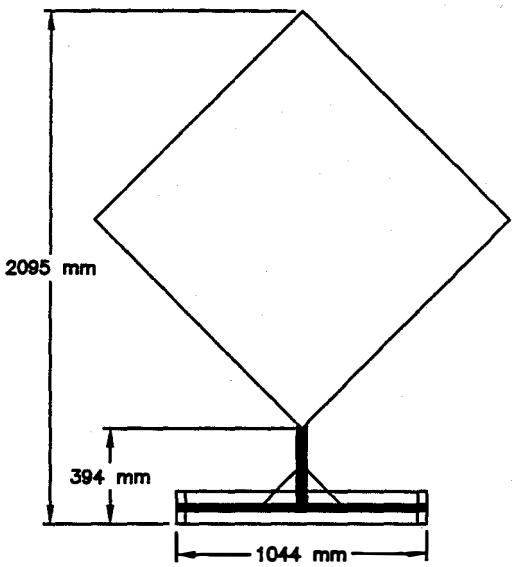

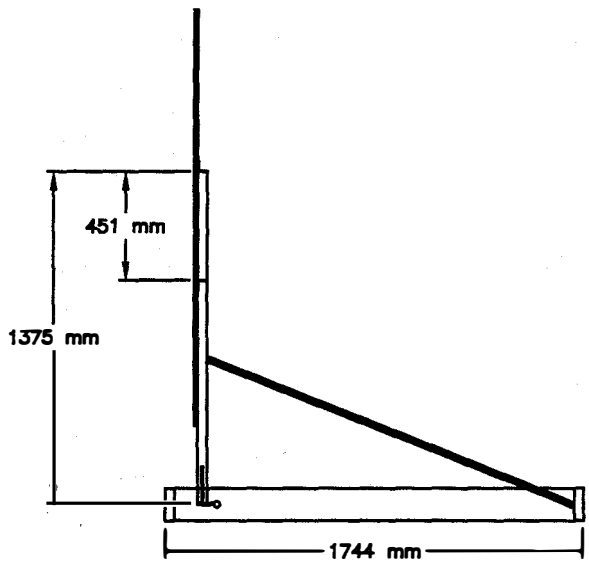

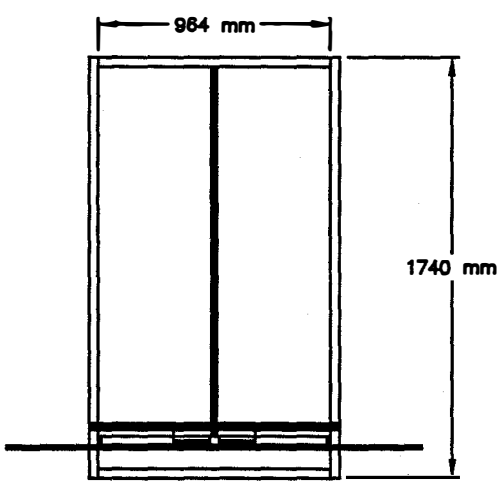

SKID–MOUNTED STAND

* Base – rectangular 135 mm wide x 38.35 mm thick treated wood
* Pipe Base – 27.28 mm sq. galvanized steel tube
* Support Rod – 21.52 mm dia. pipe

RIGID SIGN

* Panel – Plywood with reflectve material, 1220 mm x 1220 mm
* Vertical Upright – 38.61 mm sq. x 1.52 mm wall x 1375 mm long galvanized steel
* Top Bracket – 2 pcs of 3.35 mm th. x 38.40 mm x 938 mm long galvanized steel welded together
* Bottom Bracket – 2 pcs of 3.35 mm th. x 38.40 mm x 450 mm long galvanized steel welded together

Figure 1. System Nos. 1 and 2 Sign Support Details, Tests I-1 and I-2

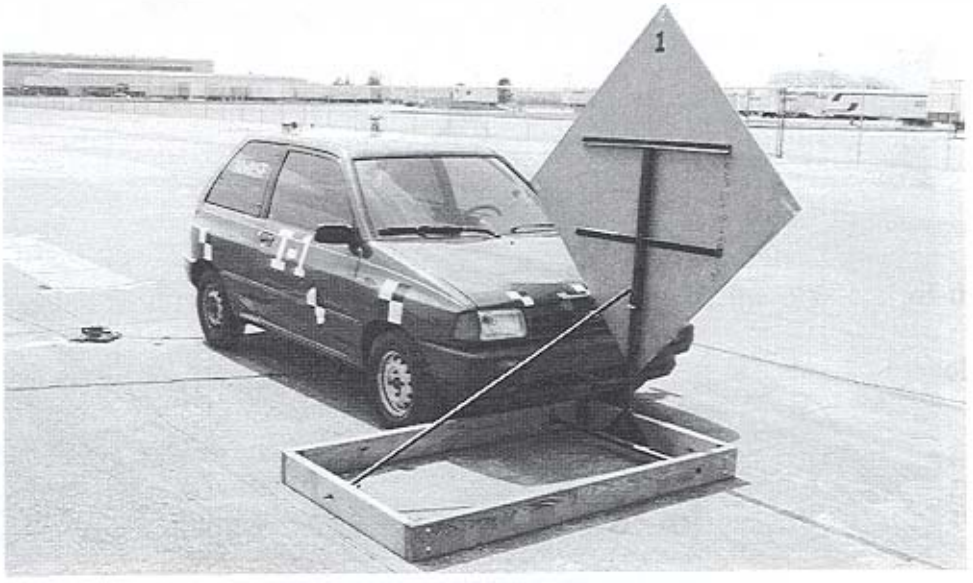

Figure 2. System No. 1 Sign, Test I-1

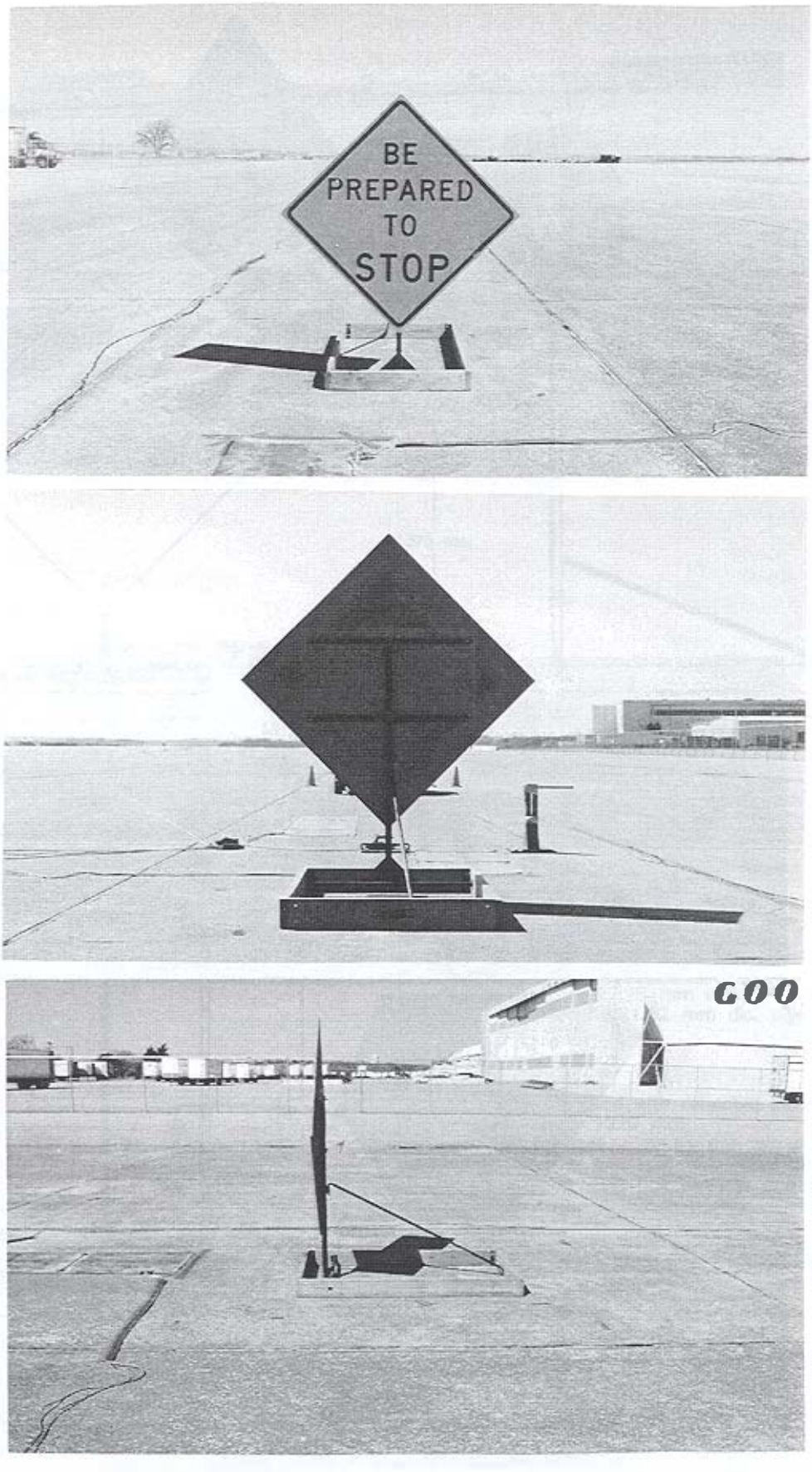

Figure 3. System No. 2 Sign, Test I-2

4 TEST CONDITIONS

4.1 Test Facility

The testing facility is located at the Lincoln Air-Park on the NW end of the Lincoln Municipal Airport and is approximately 8.0 km NW of the University of Nebraska-Lincoln. The site is protected by a 2.44-m high chain-link security fence.

4.2 Vehicle Tow and Guidance System

A reverse cable tow system with a 1:2 mechanical advantage was used to propel the test vehicles. The distance traveled and the speed of the tow vehicle were one-half that of the test vehicle. The test vehicle was released from the tow cable before impact with the work zone traffic control device. A digital speedometer was located on the tow vehicle to increase the accuracy of the test vehicle impact speed.

A vehicle guidance system developed by Hinch (12) was used to steer the test vehicle. A guide-flag, attached to the front-left wheel and the guide cable, was sheared off before impact with the work zone traffic control device. The 9.5-mm diameter guide cable was tensioned to approximately 13.3 kN, and supported laterally and vertically every 30.48 m by hinged stanchions. The hinged stanchions stood upright while holding up the guide cable, but as the vehicle was towed down the line, the guide-flag struck and knocked each stanchion to the ground. The vehicle guidance system was approximately 308.3-m long.

4.3 Test Vehicles

For test no. I-1, a 1992 Ford Festiva was used as the test vehicle. The test inertial and gross static weights were 806 kg and 882 kg, respectively. The test vehicle is shown in Figure 4, and vehicle dimensions are shown in Figure 5.

Figure 4. Test Vehicle, Test I-1

Dates: 3/31/99 Test Numbers: I-1 Model: Festiva

Make: Ford Vehicle I.D.#: KNJPT06H9N6119248

Tire Size: P155 R12 Year: 1992 Odometer: 99268

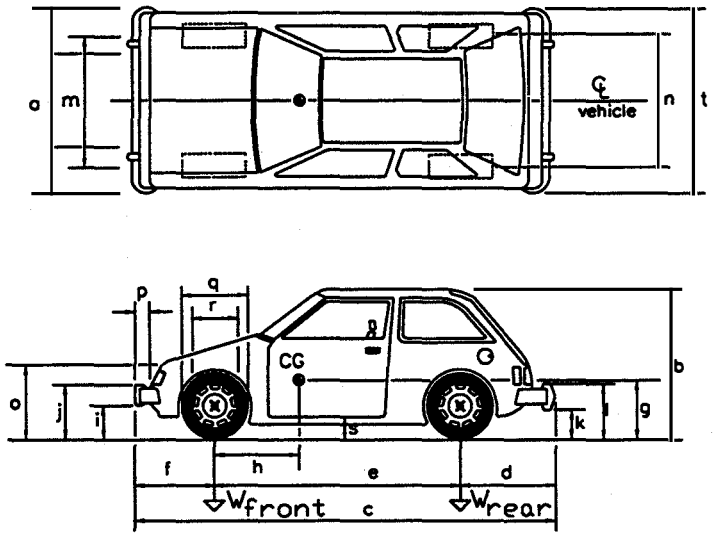

Vehicle Geometry - mm

a	1575	b	1435
c	3556	d	572
e	2299	f	686
g	546	h	772
i	368	j	514
k	387	l	565
m	1410	n	1397
o	692	p	95
q	521	r	330
s	298	t	1581

height of wheel center 251

Engine Type 4 cyl. gas

Engine size 1.3 L

Transmission Type:

Automatic or Manual

FWD or RWD or 4WD

Weight - kg	Curb	Test Inertial	Gross Static
W_{front}	572	535	571
W_{rear}	295	271	311
W_{total}	867	806	882

Damage prior to test: _____

Figure 5. Vehicle Dimensions, Test I-1

For test no. I-2, a 1993 Ford Festiva was used as the test vehicle. The test inertial and gross static weights were 818 kg and 894 kg, respectively. The test vehicle is shown in Figure 6, and vehicle dimensions are shown in Figure 7.

The Suspension Method (13) was used to determine the vertical component of the center of gravity for the test vehicles. This method is based on the principle that the center of gravity of any freely suspended body is in the vertical plane through the point of suspension. The vehicle was suspended successively in three positions, and the respective planes containing the center of gravity were established. The intersection of these planes pinpointed the location of the center of gravity. The longitudinal component of the center of gravity was determined using the measured axle weights. The location of the final centers of gravity are shown in Figures 8 and 9.

Square, black and white-checkered targets were placed on the vehicle to aid in the analysis of the high-speed film, as shown in Figures 8 and 9. One target was placed on the center of gravity on the driver's side door, the passenger's side door, and on the roof of the vehicle. The remaining targets were located for reference so that they could be viewed from the high-speed cameras for film analysis.

The front wheels of the test vehicle were aligned for camber, caster, and toe-in values of zero so that the vehicle would track properly along the guide cable. Two 5B flash bulbs were mounted on both the left and right quarter points of the vehicle's roof to pinpoint the time of impact with the work zone traffic control device on the high-speed film. The flash bulbs were fired by a pressure tape switch mounted on the front face of the bumper. A remote controlled brake system was installed in the test vehicle so the vehicle could be brought safely to a stop after the test.

Figure 6. Test Vehicle, Test I-2

Dates: 4/7/99 Test Numbers: I-2 Model: Festiva

Make: Ford Vehicle I.D.#: KNJPT05H8P6100730

Tire Size: 154/R12 Year: 1993 Odometer: 76448

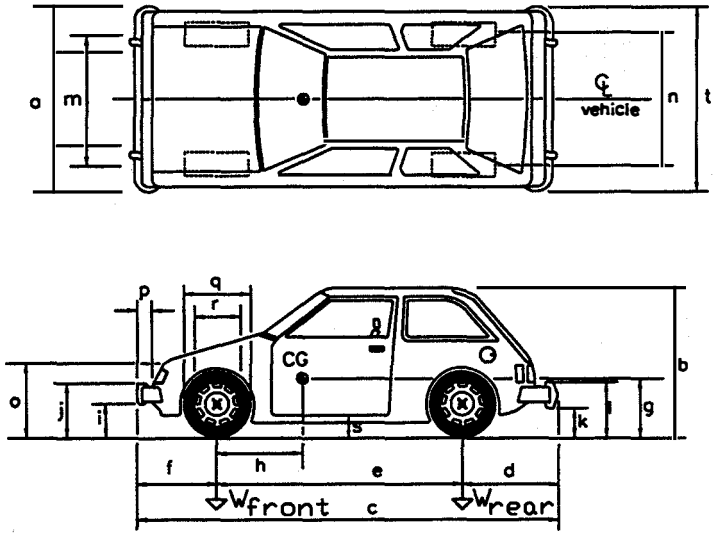

Vehicle Geometry - mm

a	1562	b	1422
c	3531	d	546
e	2292	f	673
g	546	h	813
i	368	j	508
k	381	l	559
m	1403	n	1394
o	711	p	95
q	521	r	330
s	279	t	1613

height of wheel center 251

Engine Type 4 cyl. gas

Engine size 1.3 L

Transmission Type:

Automatic or (Manual)

(FWD) or RWD or 4WD

Weight - kg	Curb	Test Inertial	Gross Static
W_{front}	532	528	564
W_{rear}	284	290	330
W_{total}	816	818	894

Damage prior to test: _____

Figure 7. Vehicle Dimensions, Test I-2

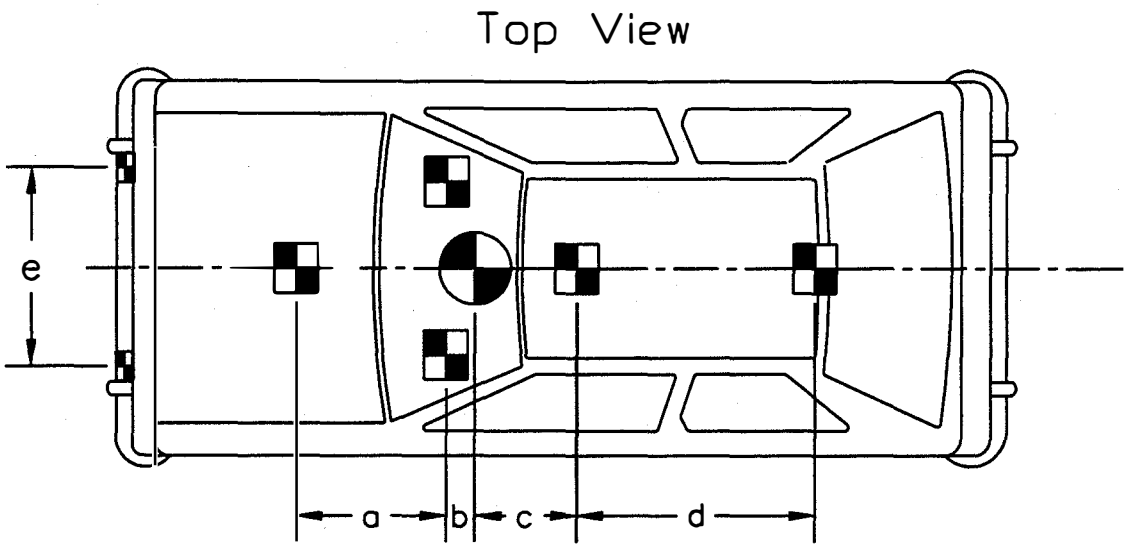

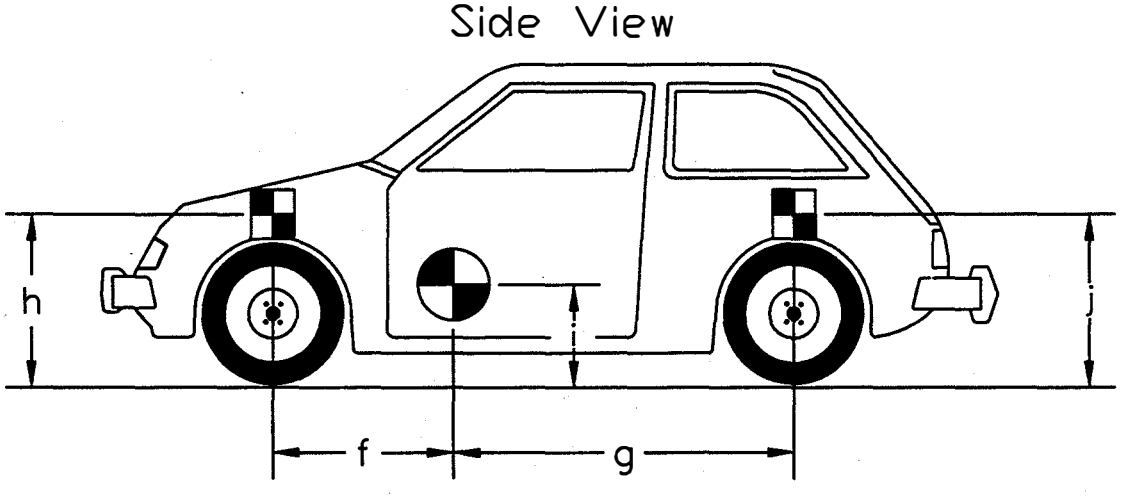

TEST #: I-1

TARGET GEOMETRY (mm)

a	---	b	---	c	---	d	845
e	794	f	772	g	1524	h	692
		i	546	j	727		

Figure 8. Vehicle Target Locations, Test I-1

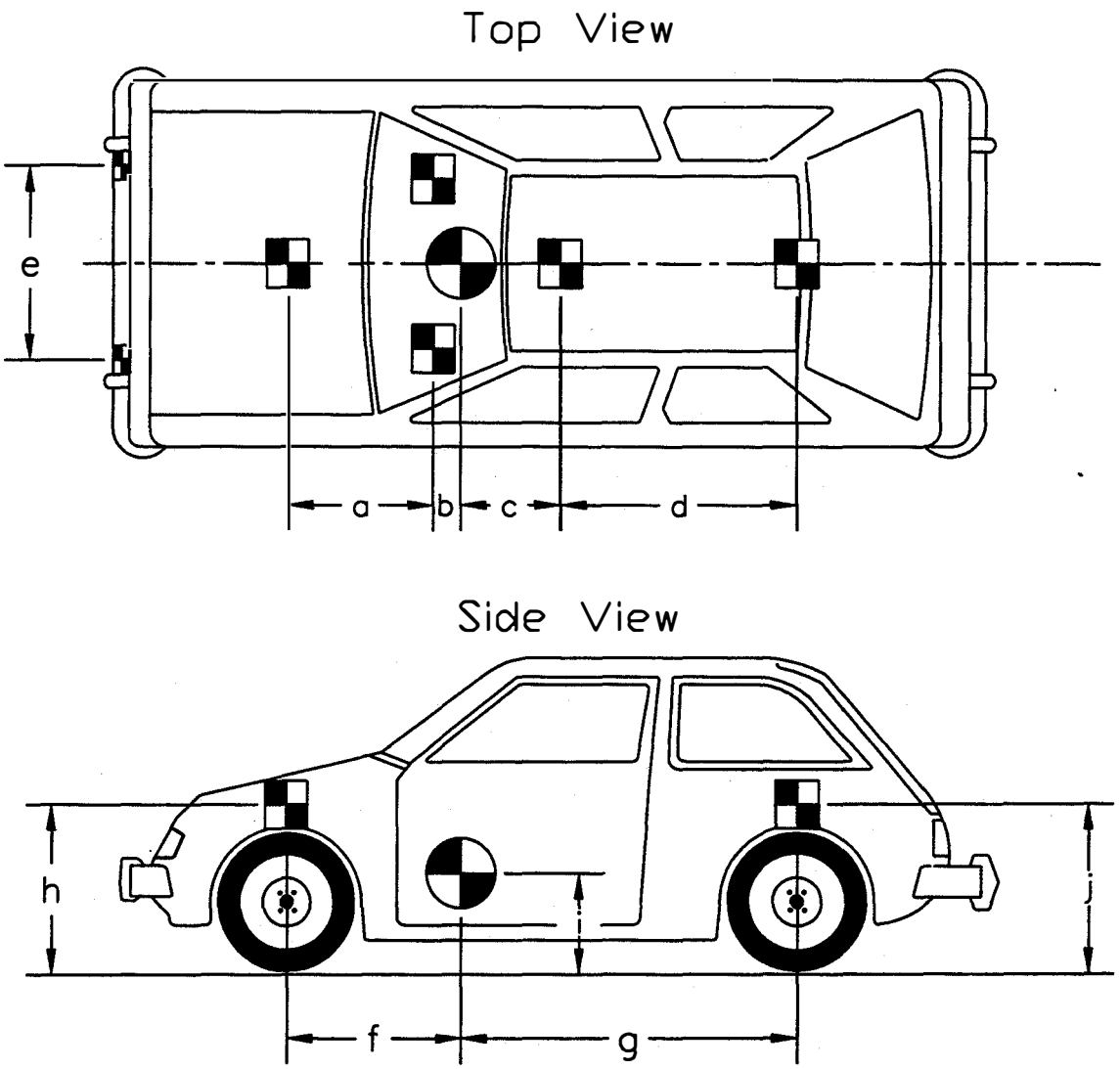

TEST #: I-2

TARGET GEOMETRY (mm)

a	---	b	---	c	---	d	---
e	---	f	813	g	1480	h	686
		i	546	j	705		

Figure 9. Vehicle Target Locations, Test I-2

4.4 Data Acquisition Systems

4.4.1 High-Speed Photography

For test nos. I-1 and I-2, two high-speed 16-mm Red Lake Locam cameras, with operating speeds of approximately 500 frames/sec, were used to film the crash test. A Locam, with a 16 to 64-mm zoom lens, and a SVHS video camera were placed downstream and offset to the right from the impact point and had a larger view of the impact. A Locam, with a 16 to 64-mm zoom lens, and a SVHS video camera were placed on the right-side of the impact orientation and had a field of view perpendicular to the impact of the device. A schematic of all four camera locations for tests I-1 and I-2 is shown in Figure 10. The film was analyzed using the Vanguard Motion Analyzer. Actual camera speed and camera divergence factors were considered in the analysis of the high-speed film.

4.4.2 Pressure Tape Switches

For test nos. I-1 and I-2, five pressure-activated tape switches, spaced at 2-m intervals, were used to determine the speed of the vehicle before impact with each device. Each tape switch fired a strobe light which sent an electronic timing signal to the data acquisition system as the right-front tire of the test vehicle passed over it. Test vehicle speed was determined from electronic timing mark data recorded with "Test Point" software. Strobe lights and high-speed film analysis are used only as a backup in the event that vehicle speed cannot be determined from the electronic data.

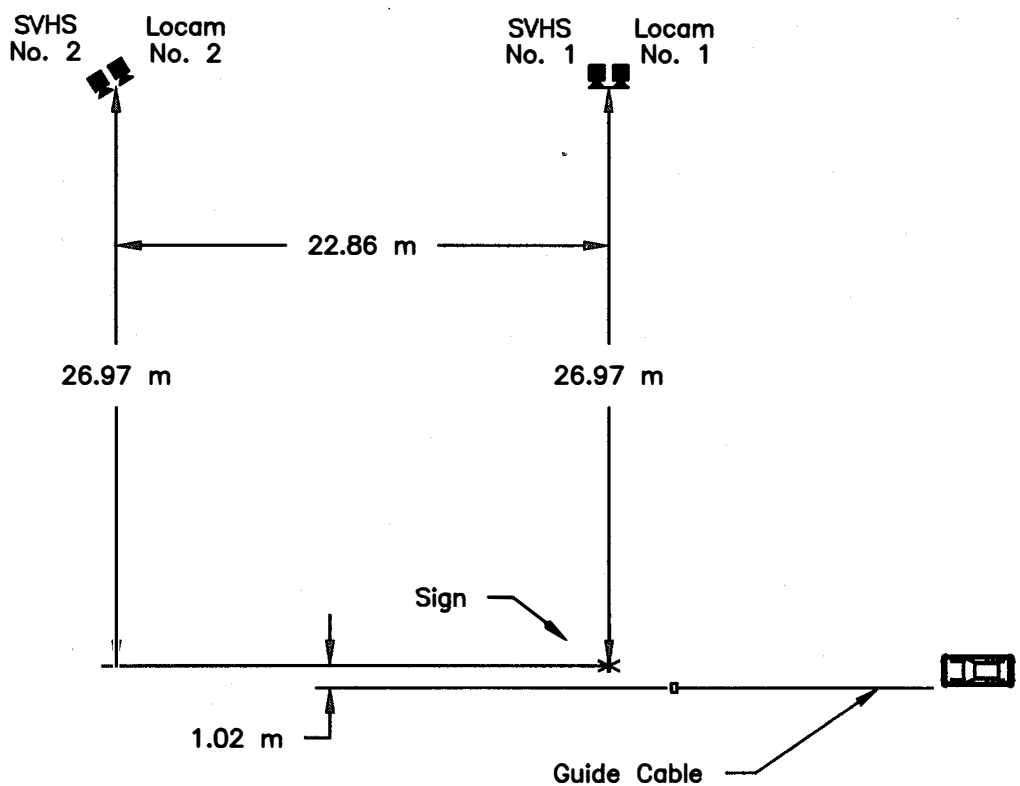

Figure 10. Location of High-Speed Cameras, Tests I-1 and I-2

5 CRASH TEST NO. 1 (SYSTEM NO. 1)

5.1 Test I-1

The 882-kg small car impacted System No. 1, a sign support oriented sideways to the vehicle (the rigid panel parallel to the vehicle's path), at a speed of 99.6 km/hr and an angle of 90 degrees. A summary of the test results and the sequential photographs are shown in Figure 11. Additional sequential photographs are shown in Figure 12.

5.2 Test Description

The test vehicle impacted System No. 1 with the centerline of the vehicle aligned with the centerline of the sign support, as shown in Figure 13. At 0.014 sec after impact, the hood was creased down the center and the outside edges buckled upward around the sign panel. At this same time, the vertical support deformed about the vehicle's bumper which caused the top of the sign panel to rotate toward the vehicle. After 0.030 sec, the corner of the sign panel closest to the vehicle impacted the lower-center of the windshield. At 0.032 sec, the vertical support ripped away from the wooden base as the vehicle began to travel over it. After 0.057 sec, the wooden base broke into several pieces. At this same time, the sign panel, with the vertical support still attached, was still in contact with the windshield and hood and continued to travel with the vehicle. At 0.107 sec, the sign panel, which was not in contact with the vehicle, traveled along in front of and at about the same speed as the vehicle. One of the larger pieces of the wooden base was along side the right-front side of the vehicle at 0.110 sec. At 0.179 sec, the sign panel and vertical support began to rotate counter-clockwise (CCW) in front and above the vehicle. At 0.220 sec, the sign panel was above the vehicle's hood and continuing to rotate CCW. At 0.275 sec, the large piece of the wooden base was near the right-side door, while the sign panel continued to rotate CCW.

After 0.345 sec, the sign panel rotated to a horizontal position above the vehicle. At this same time, the large piece of the wooden base was traveling at about the same speed as the vehicle, but without contact with the vehicle. The final position of one of the larger pieces of the wooden base was 41.15 m downstream and 6.10 m right from the original position. The other larger piece of the wooden base was located 60.05 m downstream and 1.52 m right from its initial position. There were smaller pieces of wooden base's debris were scattered along a path of 24.38 m downstream with a width of 3.81 m left and right of the original position. The pipe base, vertical tubing, mast, support rod, and sign panel, while still intact, came to rest 56.69 m downstream and 10.67 m right of the initial position. The vehicle subsequently came to rest 106.68 m downstream from the midpoint of the impact point and 7.01 m right from the centerline of the vehicle's original path. The final positions of the vehicle and the sign support are shown in Figure 11.

5.3 System and Component Damage

Damage to System No. 1 is shown in Figures 14 and 15. System No. 1 encountered moderate damage to the sign support. The wooden base broke into two larger pieces and many smaller pieces. The pipe base, vertical tubing, mast, support rod, and sign panel all remained intact, but encountered deformations. Each leg of the pipe base bent to a 30 degree angle in opposite directions. The vertical tubing was bent in the shape of the nose of the vehicle. The support rod was bent into a 90 degree angle about the top third of the rod. The sign panel encountered scrape marks near the bottom front of the impacted side. The two bolts furthest away from the impact were slightly pulled through the plywood. No major damage was found to have occurred to the mast.

5.4 Vehicle Damage

Exterior vehicle damage was moderate, as shown in Figures 16 and 17. A hole through the windshield was located 203 mm from the bottom and slightly to the right of the center. The windshield also had "spider web" cracking around the hole. The hood creased down the center and the edges of the hood folded upward. The left-front side of the hood also encountered scrape marks. The center point of the bumper cover had a slight indentation. A small crack was found at the top midpoint of the grill. Scrape marks and dents were found just above the target on the right-side door. The right-side headlight and blinker light were broken. No other damage to the vehicle was found. There were no interior occupant compartment deformations to the vehicle.

5.5 Discussion

Following test I-1, a safety performance evaluation was conducted, and the work zone traffic control device, System No. 1, was determined to be unacceptable according to the NCHRP Report No. 350 criteria. It was deemed unacceptable due to penetration through the windshield and loss of structure of both glass layers which could result in obstructed driver visibility. Detached elements and debris from System No. 1 slightly penetrated the lower middle of the windshield. Detached elements and debris also showed potential for penetrating the occupant compartment due to the cracked lower-middle region of the windshield. Deformations of, or intrusion into, the occupant compartment did occur. The vehicle's trajectory did not intrude into adjacent traffic lanes.

After discussion with the sponsor, it was concluded that there were potential minor modifications of the sign support that may prevent intrusion into the occupant compartment. It was decided that a test of the sign at 0 degrees was warranted prior to investigating further effort into modification to address the performance from test no. 1.

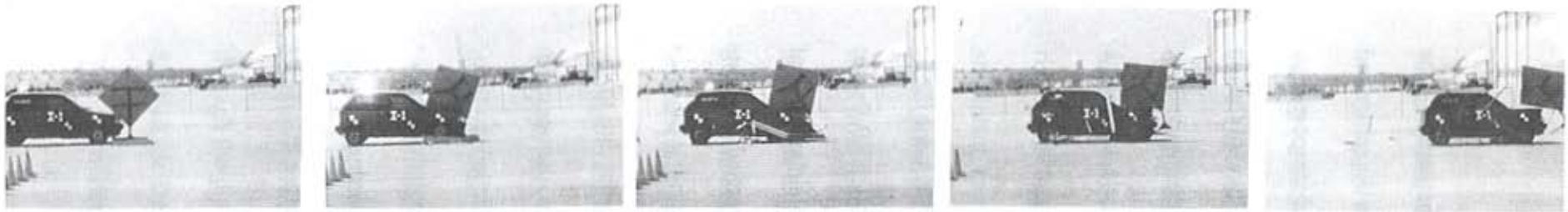

0.000 sec | 0.030 sec | 0.057 sec | 0.107 sec | 0.220 sec

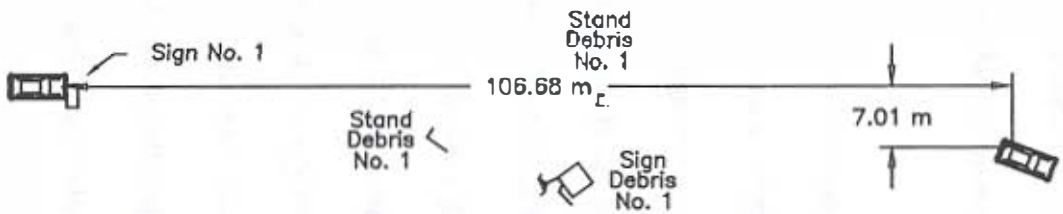

Note: The wooden base broke into two large pieces and many smaller pieces with a scatter pattern of 3.81 m left, 3.81 m right, and 24.38 m downstream from the original position of the sign.

- Test Number I-1
- System Number I
- Date 3/31/99
- Test Article
  - Type ..... Category 2 Skid-Mounted Sign Support
  - Stand ..... Wooden Frame
  - Sign Panel ..... Plywood with reflective material
  - Installation Length ..... 1.0 m
  - Key Elements
    - Size and/or dimension . 2.1 m high
    - Material ..... Galvanized steel
  - Orientation ..... Sideways with centerline
- Soil Type ..... On dry pavement
- Vehicle Model ..... 1992 Ford Festiva
  - Curb ..... 867 kg
  - Test Inertial ..... 806 kg
  - Gross Static ..... 882 kg
- Vehicle Speed
  - Impact ..... 99.6 km/hr
  - Exit ..... NA
- Vehicle Angle
  - Impact ..... 90 deg
  - Exit ..... 90 deg
- Vehicle Stability ..... Satisfactory
- Occupant Ridedown Deceleration (10 msec avg.)
  - Longitudinal ..... NA
  - Lateral (not required) ..... NA
- Occupant Impact Velocity (Normalized)
  - Longitudinal ..... NA
  - Lateral (not required) ..... NA
- Vehicle Damage ..... Windshield cracking & penetration, moderate hood indentation
  - TAD[12] 12-FR-1
  - SAE[13] 12-FRAN1
- Vehicle Stopping Distance ..... 106.68 m downstream 7.01 m right
- Barrier Damage ..... Moderate – Broke apart

Figure 11. Summary of Test Results and Sequential Photographs, Test I-1

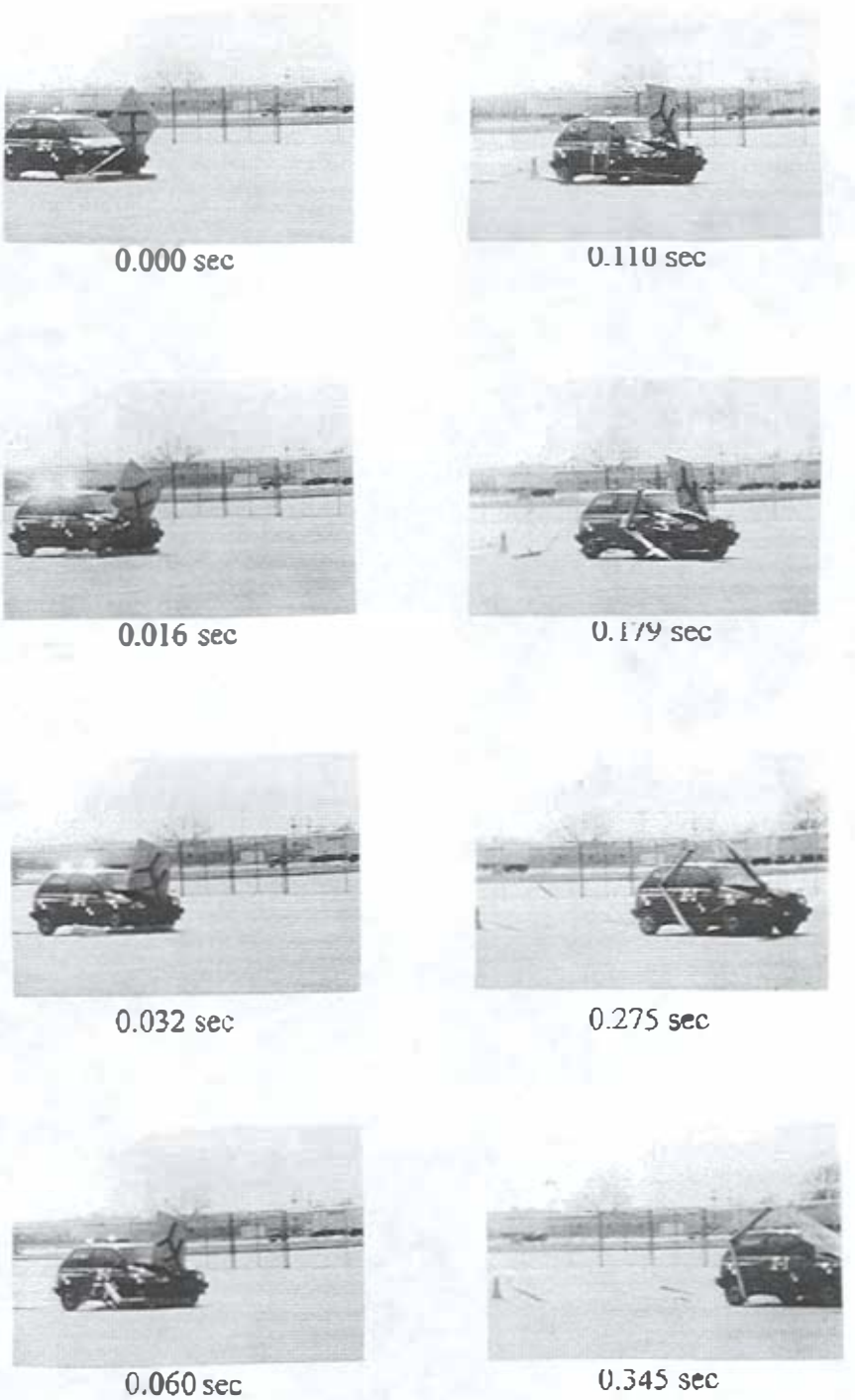

Figure 12. Additional Sequential Photographs, Test I-1

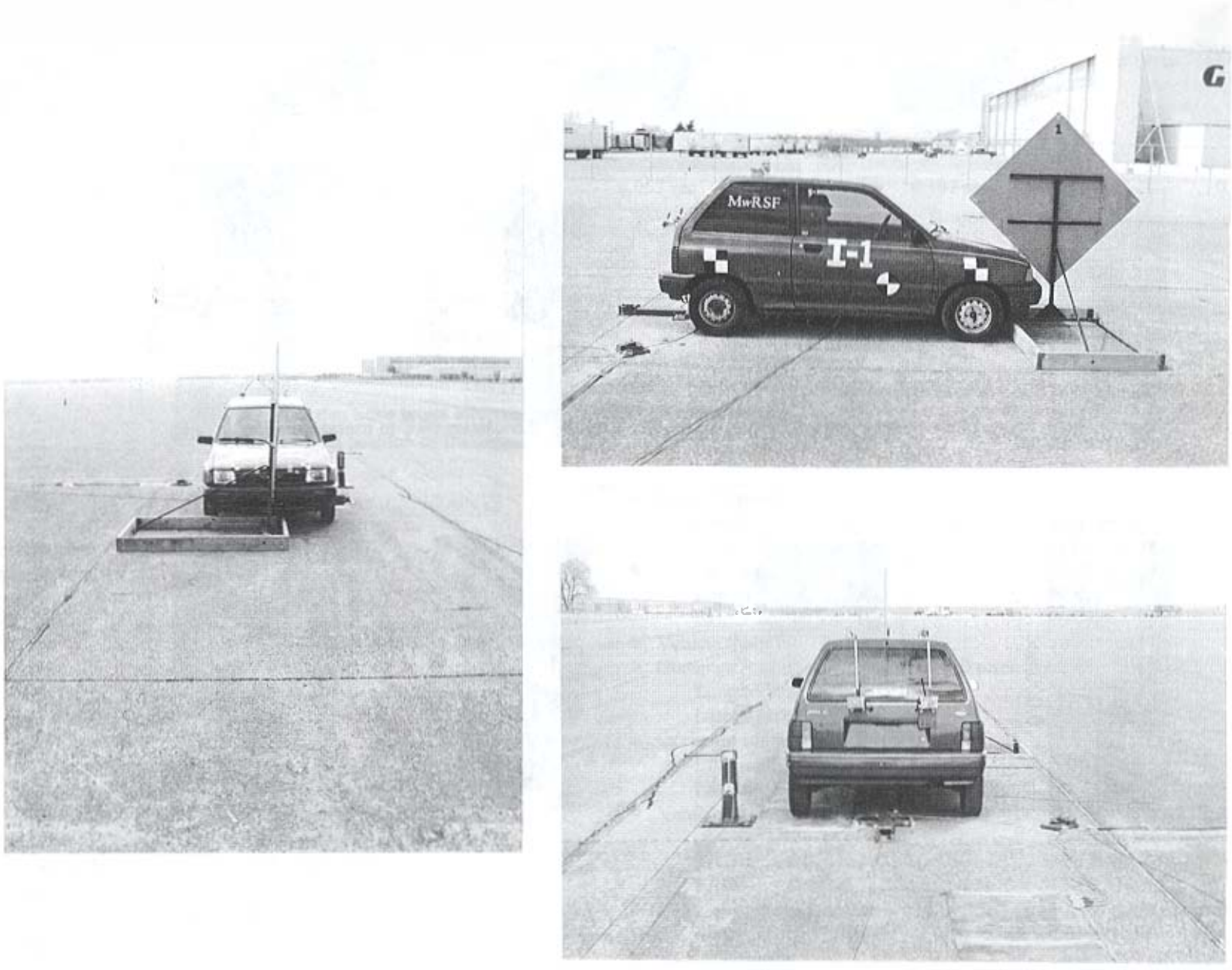

Figure 13. Impact Location, Test I-1

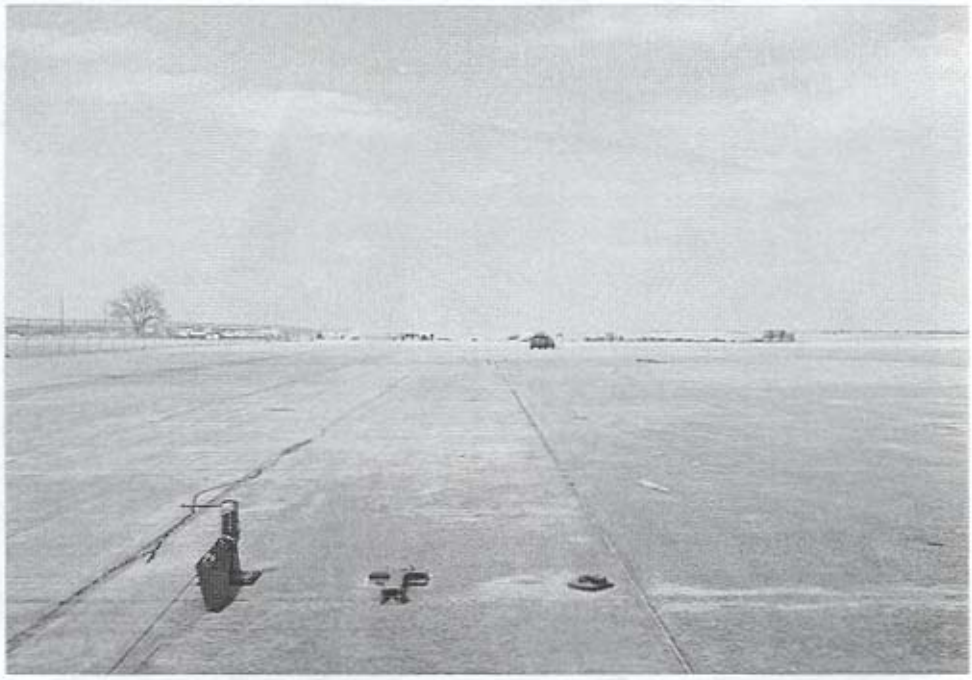

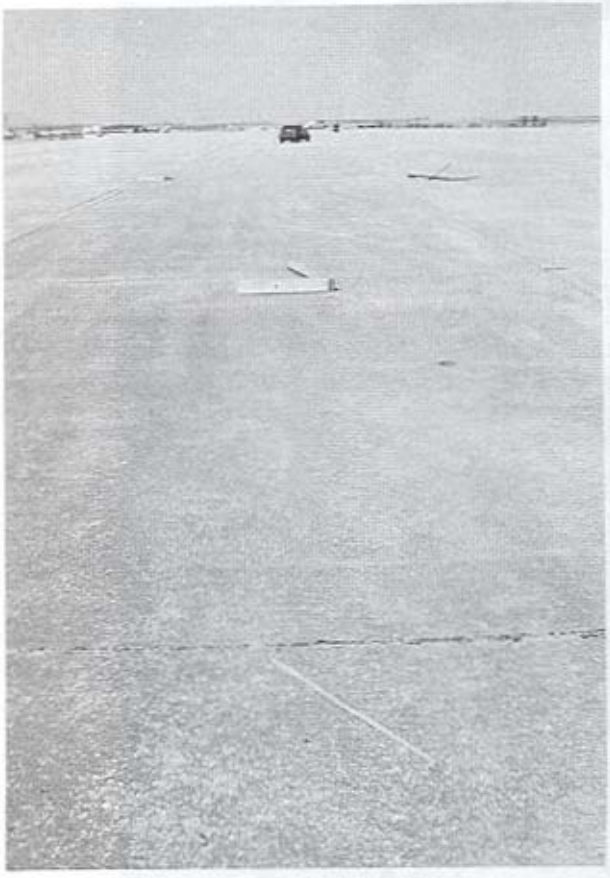

Figure 14. System No. 1 Overall Damage, Test I-1

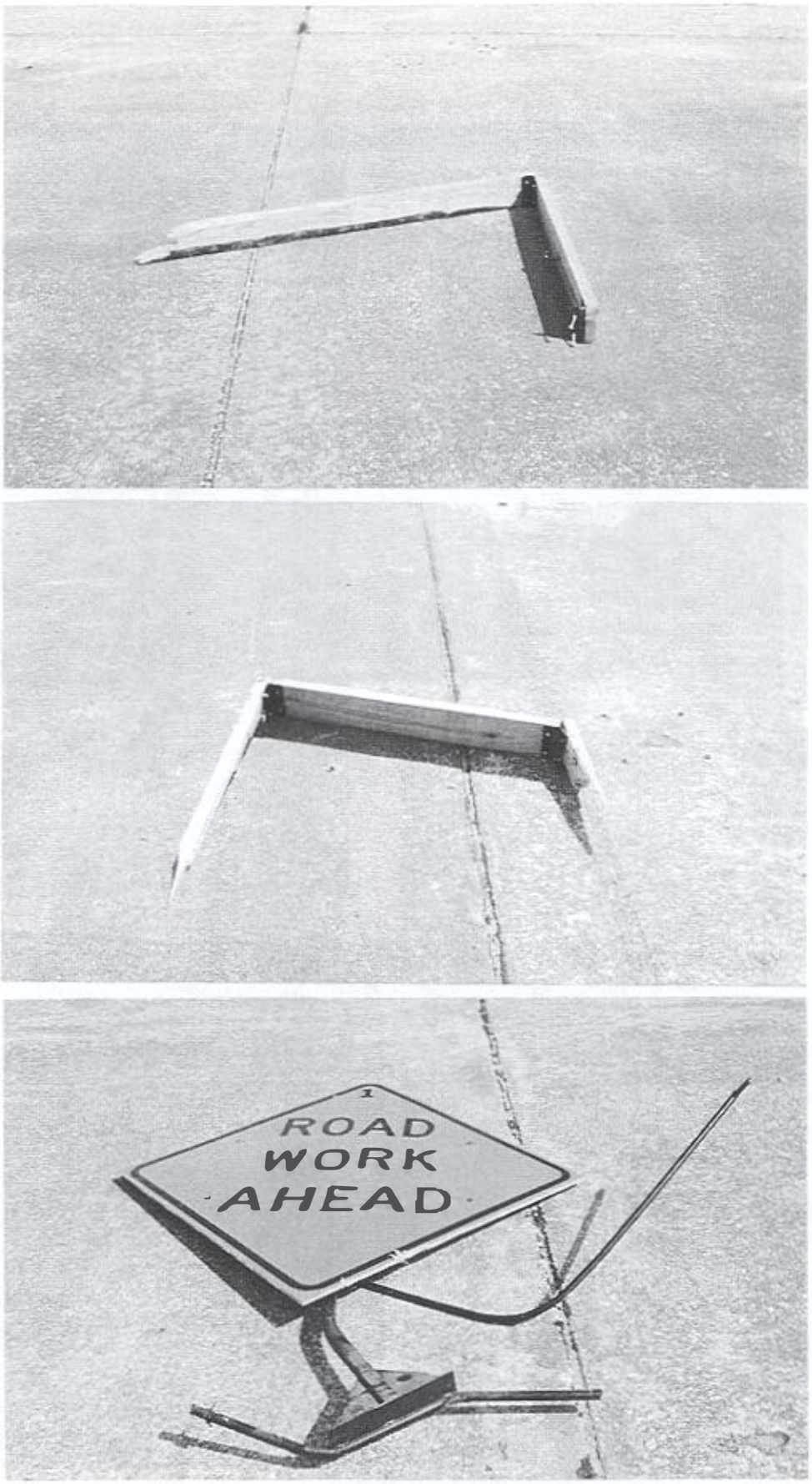

Figure 15. System No. I Damage, Test I-1

Figure 16. Vehicle Damage, Test I-1

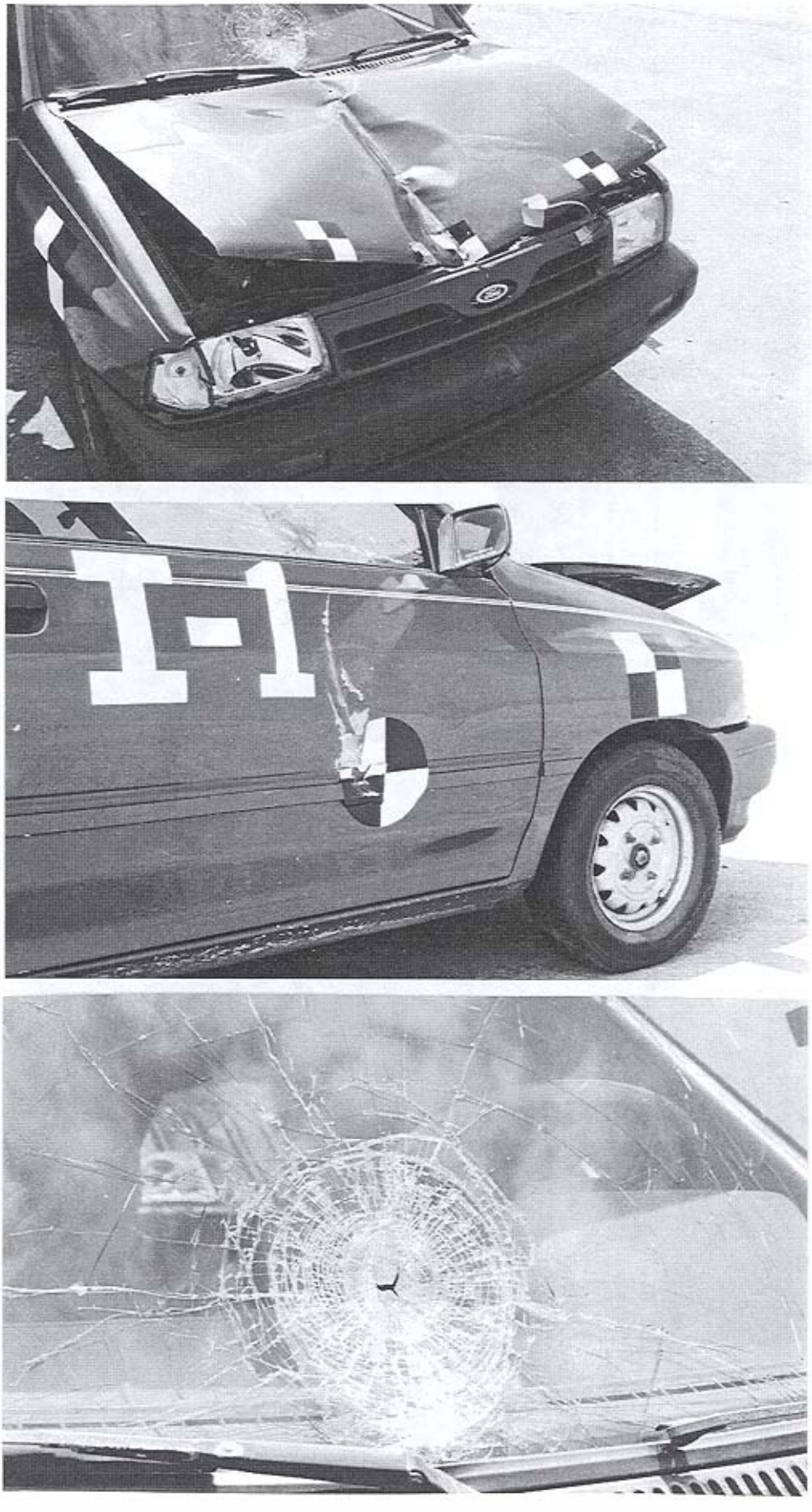

Figure 17. Vehicle and Windshield Damage, Test I-1

6 CRASH TEST NO. 2 (SYSTEM NO. 2)

6.1 Test I-2

The 894-kg small car impacted System No. 2, a sign support oriented head-on to the vehicle (the rigid panel perpendicular to the vehicle's path), at a speed of 100.5 km/hr and an angle of 0 degrees. A summary of the test results and the sequential photographs are shown in Figure 18. Additional sequential photographs are shown in Figure 19.

6.2 Test Description

The test vehicle impacted System No. 2 with the centerline of the vehicle aligned with the centerline of the sign support, as shown in Figure 20. At 0.016 sec, the top of the panel flexed away from the vehicle while the vertical support deformed around the front of the vehicle. After 0.028 sec, the vertical support separated from the wooden base and the support rod separated from the vertical support. At 0.042 sec, the top of the sign panel impacted the windshield. At 0.070 sec, the vertical support and horizontal sign angle brackets flexed away from the sign panel. At this same time, the sign panel was in contact with the windshield and the hood. After 0.127 sec, the sign panel and vertical support began to lose contact with the vehicle, and the wooden base was under the vehicle. At 0.147 sec, the sign panel and attached vertical support traveled above the vehicle's hood without any contact with the vehicle. At this same time, one piece of the wooden base was in front of the left side and one was under the middle of the vehicle. After 0.255 sec, one piece of the wooden base cleared the rear of the vehicle while the other larger piece of the wooden base was in front of the vehicle. At 0.279 sec, the sign panel, with attached vertical support, traveled above and in front of the vehicle at about the same speed as the vehicle. At 0.515 sec, the sign panel and vertical support impacted the hood and the ground, respectively, traveling along with the vehicle.

The final position of one of the larger pieces of the wooden base was 9.14 m downstream from the original position. Another large piece of the wooden base was located 12.19 m downstream and 1.83 m right from its initial position. The other piece of wooden base, which was still attached to the support rod, was found 83.82 m downstream and 5.79 m left from the original position. The pipe base, vertical tubing, mast, and sign panel, while still intact, came to rest 134.11 m downstream and 5.79 m left of the initial position. The vehicle subsequently came to rest 106.07 m downstream from the midpoint of the impact point and 5.49 m right from the centerline of the vehicle's original path. The final positions of the vehicle and the sign support are shown in Figure 18.

6.3 System and Component Damage

Damage to System No. 2 is shown in Figures 21 through 23. System No. 2 has moderate damage to the sign support. The wooden base broke into three larger pieces and many smaller pieces. One of the larger pieces, the back piece with the support rod connected to it, was bent into a 120 degree angle about the rod's midpoint. The pipe base, vertical tubing, mast, and sign panel all remained intact but encountered deformations. Each leg of the pipe base bent evenly about the attached triangular gussett plate. The vertical tubing bent at 381 mm above the triangular gussett plate and was slightly dented at the support rod's connection point. Weld failures were found at the flat plate and gussett connection and the lower crossbrace and vertical tubing connection. The lower crossbrace was bowed slightly away from the sign panel. The sign panel was cracked on the left side near the lower crossbrace, and the bottom tip of the sign panel was also broken. No major damage was found to have occurred to the upper crossbrace.

6.4 Vehicle Damage

Exterior vehicle damage is shown in Figures 24 and 25. Light scuff marks were found on the hood.

The center point of the bumper cover encountered a slight indentation. Scrape marks and small dents were found on the lower left-side door and the lower left-rear quarter panel. The windshield cracked due to contact with System No. 2. The windshield sustained major "spider web" cracking throughout, with both layers of the windshield being cracked. Most of the structural integritity of the windshield was lost. The roof at the top of the windshield was crushed downward toward the occupant compartment. The vehicle's right-side, back-end, headlights, fog lights, and parking lights were undamaged.

6.5 Discussion

Following test I-2, a safety performance evaluation was conducted, and the work zone traffic control device at 0 degrees, System No. 2, was determined to be unacceptable according to the NCHRP Report No. 350 criteria. It was deemed unacceptable due to the "spider web" cracking and indentations in the windshield which resulted in obstructed driver visibility and loss of structure of both glass layers. Detached elements and debris from System No. 2 did not penetrate, but showed potential for penetrating the occupant compartment due to the indentation of the cracked windshield. Deformations of, or intrusion into, the occupant compartment did occur as the roof was indented downward toward the occupant compartment. The vehicle's trajectory did not intrude into adjacent traffic lanes.

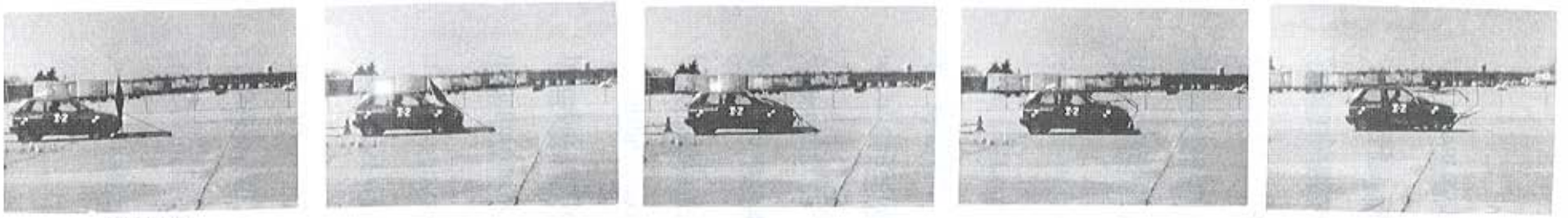

0.000 sec | 0.028 sec | 0.042 sec | 0.070 sec | 0.147 sec

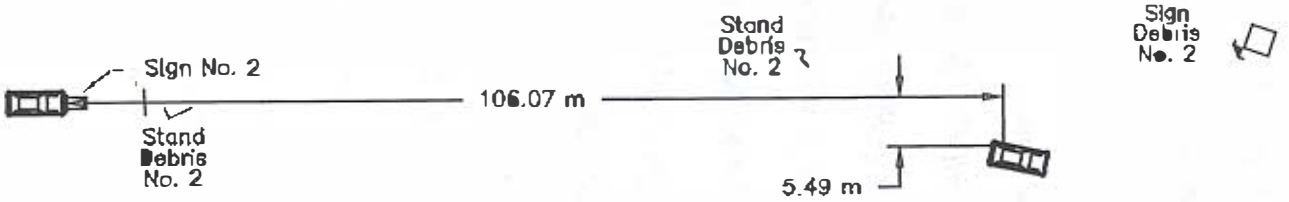

- Test Number 1-2
- System Number 2
- Date 4/7/99
- Test Article
  - Type ..... Category 2 Skid-Mounted Sign Support
  - Stand ..... Wooden Frame
  - Sign Panel ..... Plywood with reflective material
  - Installation Length ..... 1.7 m
  - Key Elements
    - Sizeand/or dimension . 2.1 m high
    - Material ..... Galvanized steel
  - Orientation ..... Head-on with midpoint
- Soil Type ..... On dry pavement
- Vehicle Model ..... 1993 Ford Festiva
  - Curb ..... 816 kg
  - Test Inertial ..... 818 kg
  - Gross Static ..... 894 kg
- Vehicle Speed
  - Impact ..... 100.5 km/hr
  - Exit ..... NA
- Vehicle Angle
  - Impact ..... 0 deg
  - Exit ..... 0 deg
- Vehicle Stability ..... Satisfactory
- Occupant Ridedown Deceleration (10 msec avg.)
  - Longitudinal ..... NA
  - Lateral (not required) ..... NA
- Occupant Impact Velocity (Normalized)
  - Longitudinal ..... NA
  - Lateral (not required) ..... NA
- Vehicle Damage ..... Severe windshield cracking and major roof indentation
  - TAD[12] 12-FR-1
  - SAE[13] 12-FRAN1
- Vehicle Stopping Distance ..... 106.07 m downstream 5.49 m right
- Barrier Damage ..... Moderate – Broke apart

Figure 18. Summary of Test Results and Sequential Photographs, Test I-2

0.000 sec

0.127 sec

0.018 sec

0.181 sec

0.042 sec

0.279 sec

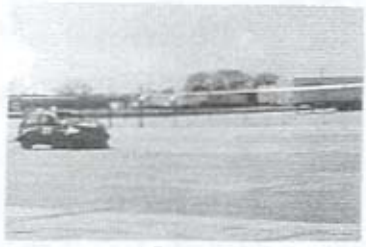

0.070 sec

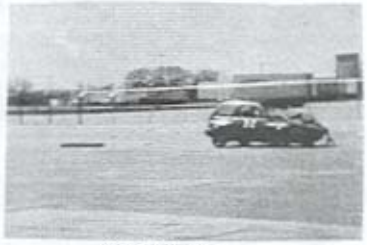

0.515 sec

Figure 19. Additional Sequential Photographs, Test 1-2

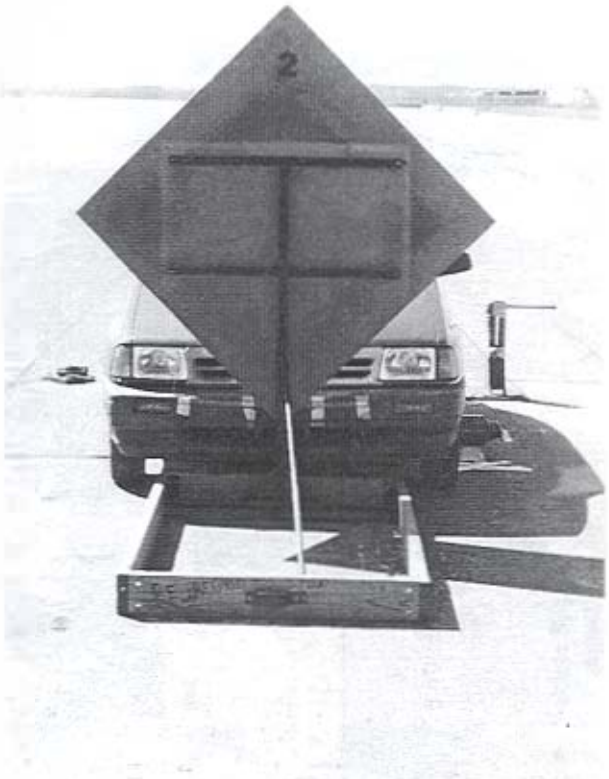

Figure 20. Impact Location, Test I-2

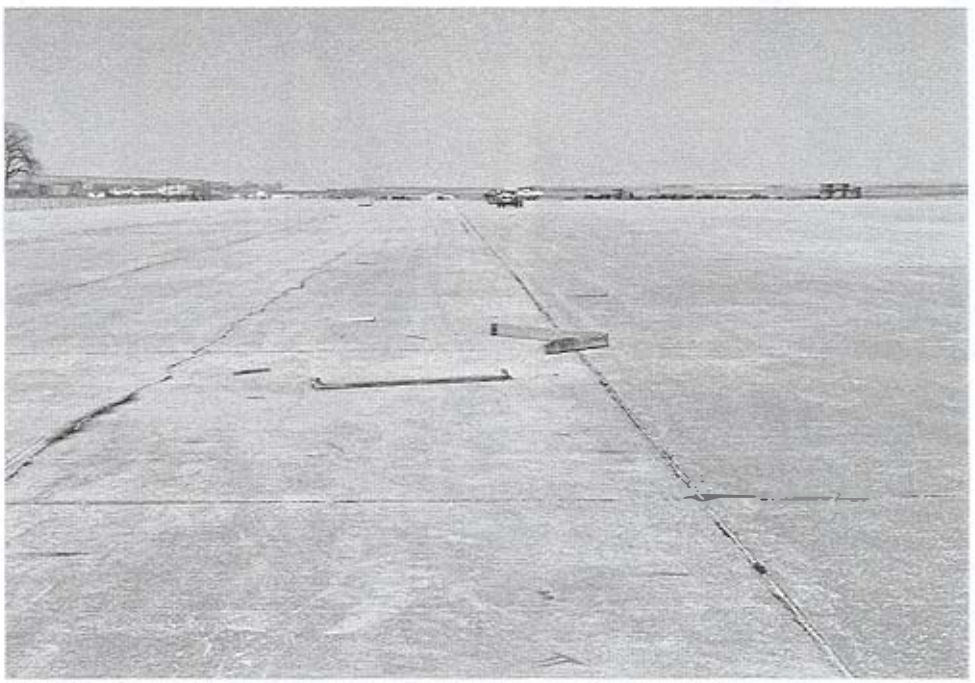

Figure 21. System No. 2 Overall Damage, Test I-2

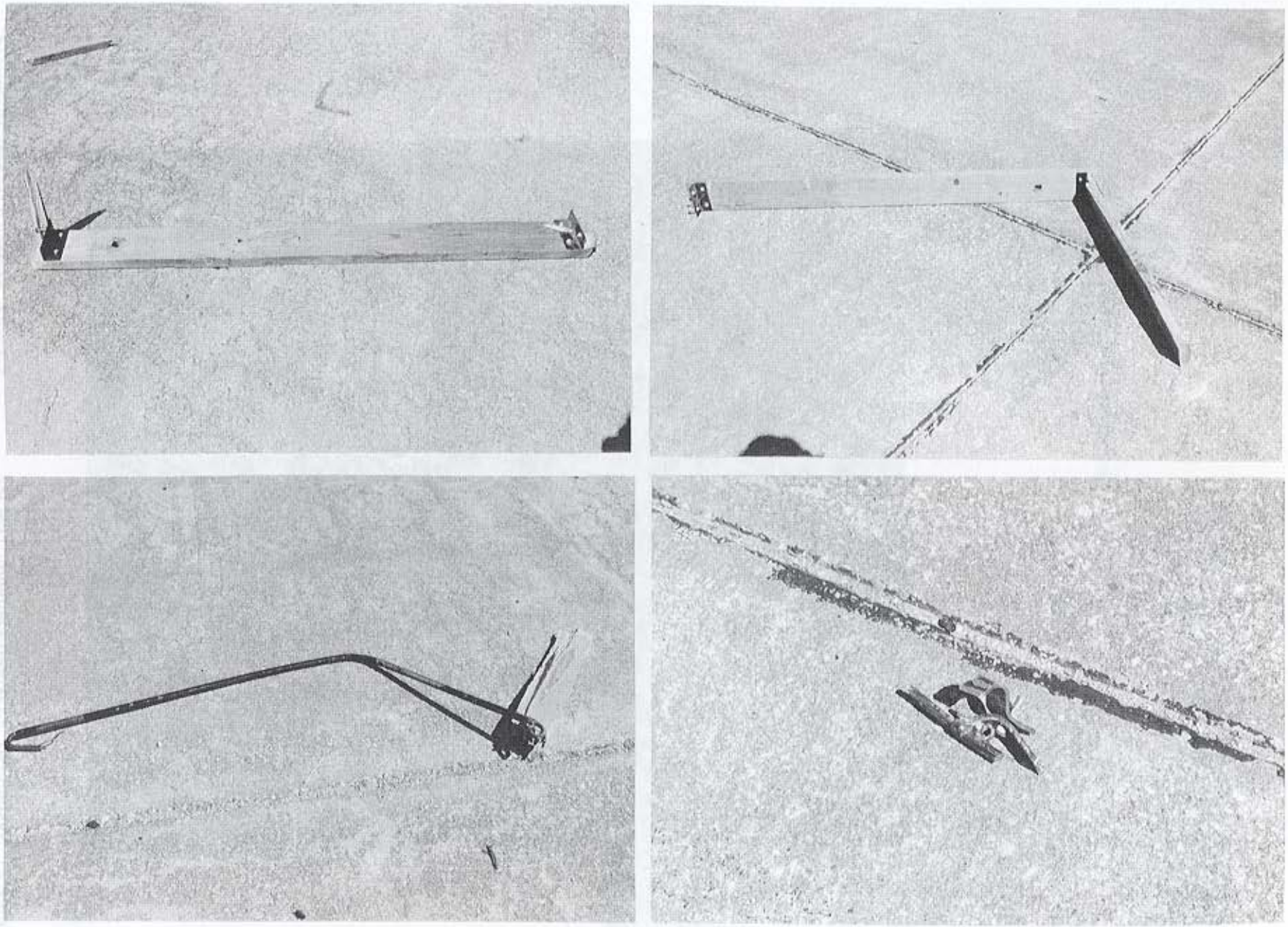

Figure 22. System No. 2 Damage, Test I-2

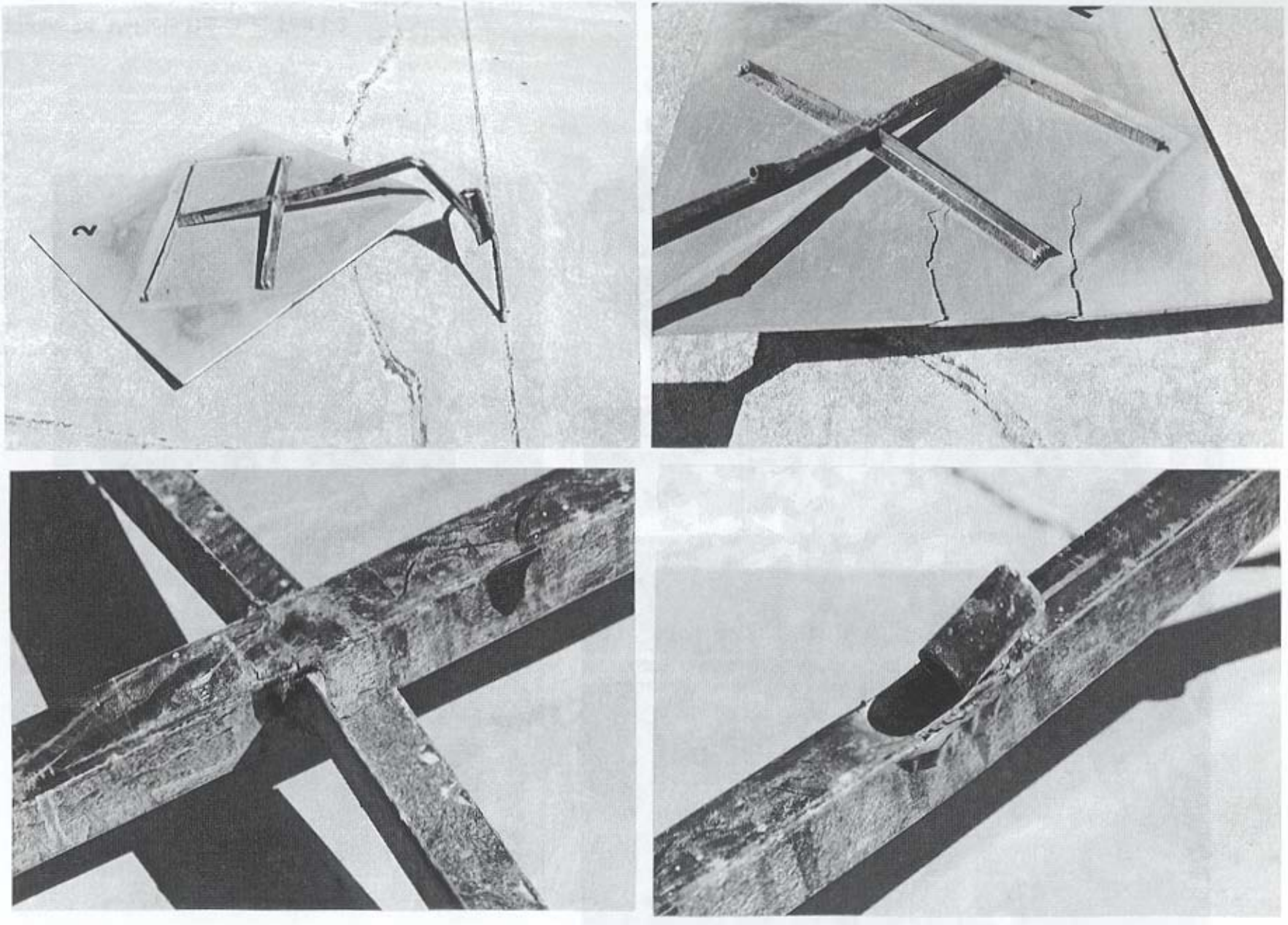

Figure 23. System No. 2 Damage, Test I-2

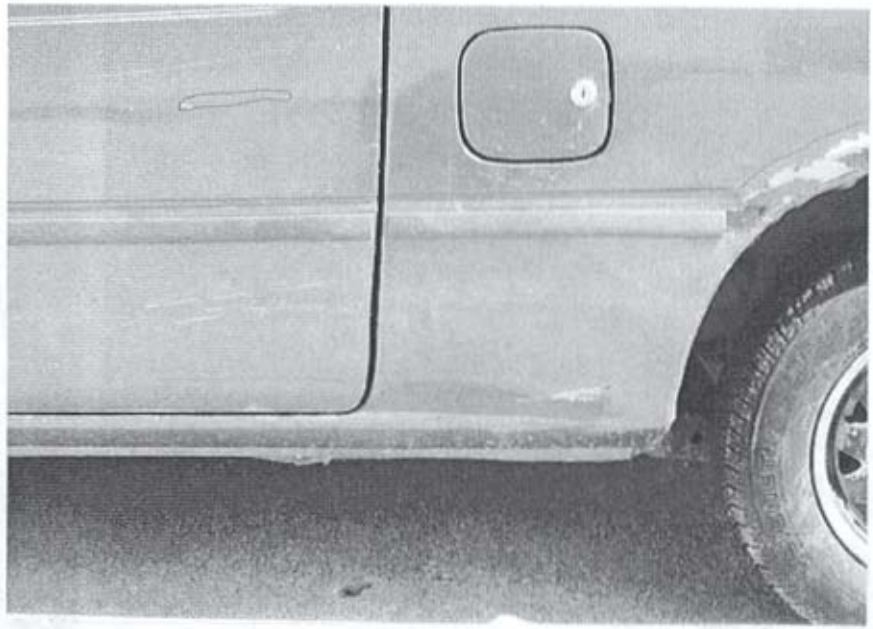

Figure 24. Vehicle Damage, Test I-2

Figure 25. Vehicle Damage, Test I-2

7 DISCUSSION

Following the analysis of the crash test results for this and previous studies of skid-mounted sign supports, some general observations were made with respect to the following: (1) the vertical position, failure type, and release time of a sign stand's fracture point, breakaway mechanism, or yielding hinge; (2) the stiffness and material of the vertical support posts; and (3) the vertical mounting height of the sign panel. The extent of the damage encountered by the vehicle as well as the possible hazards to the adjacent traffic and work zone crews are also considered.

A stand's vertical support post that fractures instead of bends (or yields) reduces the amount of flex developed in the sign panel. This relatively quick release of the vertical support post from the stand allows the sign panel to fall upon the vehicle with little additional force than what was developed through the impact. On the other hand, when the vertical support post bends, the sign panel may develop an additional load due to the vertical support post flexing away from the vehicle. When unloaded, the sign panel may have the tendency to "whip" downward onto the vehicle. In addition, a vertical support post that bends rather than fractures typically has a very slow release time (if at all) from the stand, which adds to the amount of flex in the sign panel. It is more likely that the sign panel will impact the windshield or the hood when the vertical support post bends or has a delayed fracture, resulting in a slow release time (e.g., Test I-2, System No. 2). However, if the vertical support post fractures quickly, the probability that the sign panel contacts the roof or does not contact the vehicle at all is increased.

The material used for the vertical support posts in Iowa's skid-mounted devices consisted of 16-gauge square tubing. Generally speaking, tubing support posts do not break away as cleanly as wooden support posts (5). As stated previously, the support posts did not break away but only bent for both the

90 degree (e.g., Test I-1, System No. 1) and head-on orientations (e.g., Test I-2, System No. 2). As a result, both vehicles had significant damage to their windshields.

The mounting height of the sign panel is a significant factor in determining the location and extent of damage to the vehicle. However, it is noted that this phenomenon is partially dependent on the sign panel's release time (if at all) from the vertical support posts. A lower mounting height can potentially cause significant interaction with the vehicle (e.g., Test I-2, System No. 2). Even in an end-on orientation, a low mounting height has the potential to accentuate this phenomenon (e.g., Test I-1, System No. 1).

Finally, following an analysis of the test results, it was evident that the debris from the skid-mounted sign supports tended to be thrown along the path of the impacting vehicle. The relative hazard posed to the adjacent traffic and work zone crews located adjacent to the sign supports is somewhat subjective in nature. Depending on the specific site conditions at which these devices are being used, the sign support debris was determined to be less of a hazard to adjacent traffic and work zone crews than the moving vehicle itself.

After discussion with the sponsor, it was determined that the modifications that would be required for these signs to comply with NCHRP Report No. 350 criteria would not be cost effective in light of other alternatives available to the state. Therefore, further investigation into the sign's performance was not warranted.

8 SUMMARY AND CONCLUSIONS

A total of two crash tests were conducted. The skid-mounted work zone traffic control device did not satisfactorily meet the TL-3 evaluation criteria set forth in NCHRP Report No. 350. A summary of the safety performance evaluation of each system is provided in Table 4.

For skid-mounted sign supports, performance is dependent on the behavior of many components, such as the release time of the sign panel from the vertical support posts, the material and stiffness of the vertical support posts, and the sign panel's vertical height. In conference with the sponsor, it was concluded that the modifications required to bring the sign into compliance would not be cost effective.

If consideration were given to upgrading the skid-mounted sign device, several components should be investigated. First, if the rigid panel is to remain in use, the sloped support on the back side must be removed or redesigned. Second, the vertical support should be configured to breakaway more easily and quickly. Third, the panel's mounting height should be increased in order to reduce the potential for the sign panel to strike the windshield. Finally, for the 90 degree orientation, it may be necessary to reduce the vehicle penetration under the rigid panel prior to fracturing the vertical support.

Table 4. Summary of Safety Performance Evaluation Results

Evaluation Factors	Evaluation Criteria	Test I-1	Test I-2
		#1	#2
		SMS[1]	SMS[1]
Structural Adequacy	B	U	U
Occupant Risk	D	U	U
	E	U	U
	F	S	S
	H	NA	NA
	I	NA	NA
Vehicle Trajectory	K	S	S
	N	S	S
Method of Failure[2]		1,2,3,4	1,2,3
Pass/Fail		Fail	Fail

[1] Hardware Type: SMS - Skid-mounted Sign
[2] Method of Failure:
1 - Severe windshield cracking and fracture
2 - Windshield indentation
3 - Obstruction of driver visibility
4 - Windshield penetration
5 - Occupant compartment penetration other than windshield penetration

S - Satisfactory
M - Marginal
U - Unsatisfactory
NA - Not Available

9 RECOMMENDATIONS

The Iowa skid-mounted sign performed unsatisfactorily according to the evaluation criteria set forth in NCHRP Report No. 350. Purchase of new signs after October 2000 is not recommended under current NCHRP Report No. 350 implementation.

10 REFERENCES

1. Part VI of the Manual on Uniform Traffic Control Devices (MUTCD), entitled, *Standards and Guides for Traffic Controls for Street and Highway Construction, Maintenance, Utility and Incident Management Operations*, 1988 Edition, Revision 3, September 1993.

2. Ross, H.E., Sicking, D.L., Zimmer, R.A. and Michie, J.D., *Recommended Procedures for the Safety Performance Evaluation of Highway Features*, National Cooperative Research Program (NCHRP) Report No. 350, Transportation Research Board, Washington, D.C., 1993.

3. Mak, K. K. and Zimmer, R. A., *Evaluation of Plastic Drum Specification*, Research Report No. 2924-2F, Texas Transportation Institution, Texas A&M University, College Station, Texas, September 1995.

4. Mak, K. K., Bligh, R. P., and Menges, W. L., *Evaluation of Sign Substrates for Use with Plastic Drums*, Research Report No. 2924-3F, Texas Transportation Institute, Texas A&M University, College Station, Texas, December 1996.

5. Mak, K. K., Bligh, R. P., and Menges, W. L., *Evaluation of Work Zone Barricades and Temporary Sign Supports*, Research Report No. 5388-1F, Texas Transportation Institute, Texas A&M University, College Station, Texas, February 1996.

6. Bligh, R. P., Mak, K. K., and Rhodes, Jr., L. R., *Crash Testing and Evaluation of Work Zone Barricades*, Texas Transportation Institute, Texas A&M University, Paper No. 980625, 77th Annual Meeting of the Transportation Research Board, Washington, D.C., January 1998.

7. Mak, K. K., Bligh, R. P., and Rhodes, Jr., L. R., *Crash Testing and Evaluation of Work Zone Traffic Control Devices*, Texas Transportation Institute, Texas A&M University, Paper No. 980627, 77th Annual Meeting of the Transportation Research Board, Washington, D.C., January 1998.

8. Magdaleno, J. A., Faller, R. K., Kittrell, K. R., and Post, E. R., *Full-Scale Crash Tests on Plastic Drums with Type III Object Markers*, Final Report to the Missouri Highway and Transportation Department, Report No. 87-2, University of Nebraska-Lincoln, April 1988.

9. Polivka, K. A., Faller, R. K., Holloway, J. C., Rohde, J. R., and Sicking, D. L., *Crash Tests of Work Zone Traffic Control Devices*, Final Report to Dicke Tool Company, Report No. TRP-03-79-98, University of Nebraska-Lincoln, December 7, 1998.

10. Polivka, K. A., Faller, R. K., Holloway, J. C., Rohde, J. R., and Sicking, D. L., *Crash Tests of Work Zone Traffic Control Devices–Phase II*, Final Report to Dicke Tool Company, Report

No. TRP-03-81-99, University of Nebraska-Lincoln, April 6, 1999.

11. Polivka, K. A., Faller, R. K., Holloway, J. C., Rohde, J. R., and Sicking, D. L., *Evaluation of Temporary Sign Stands and Flag Systems – Phase I*, Draft Report to Lang Products International, Inc., Report No. TRP-03-82-99, University of Nebraska-Lincoln, April 1999.

12. *Memorandum on Action: Identifying Acceptable Highway Safety Features*, July 25, 1997, File Designation HNG-14, Federal Highway Administration (FHWA), Washington, D.C., 1997.

13. Hinch, J., Yang, T-L, and Owings, R., *Guidance Systems for Vehicle Testing*, ENSCO, Inc., Springfield, VA 1986.

14. *Center of Gravity Test Code - SAE J874 March 1981*, SAE Handbook Vol. 4, Society of Automotive Engineers, Inc., Warrendale, Pennsylvania, 1986.

15. *Vehicle Damage Scale for Traffic Investigators*, Second Edition, Technical Bulletin No. 1, Traffic Accident Data (TAD) Project, National Safety Council, Chicago, Illinois, 1971.

16. *Collision Deformation Classification - Recommended Practice J224 March 1980*, Handbook Volume 4, Society of Automotive Engineers (SAE), Warrendale, Pennsylvania, 1985.