CRITICAL IMPACT POINTS FOR CRASH TESTING TRANSITIONS

Submitted by

Ronald K. Faller, Ph.D., P.E.
Research Assistant Professor

Dean L. Sicking, Ph.D., P.E.
Associate Professor and MwRSF Director

MIDWEST ROADSIDE SAFETY FACILITY
University of Nebraska-Lincoln
1901 "Y" Street, Building "C"
Lincoln, Nebraska 68588-0601
(402) 472-6864

Submitted to

Charles F. McDevitt, P.E.
Project Manager and Research Structural Engineer

FEDERAL HIGHWAY ADMINISTRATION
Turner-Fairbank Highway Research Center
Safety Design Division (HSR-20)
6300 Georgetown Pike
McLean, Virginia 22101-2296

MwRSF Research Report No. TRP-03-84-99

April 16, 1999

Technical Report Documentation Page

1. Report No. DTFH61-98-P-00287	2.	3. Recipient's Accession No.
4. Title and Subtitle: Critical Impact Points For Crash Testing Transitions		5. Report Date: April 16, 1999
		6.
7. Author(s): Faller, R.K. and Sicking, D.L.		8. Performing Organization Report No. TRP-03-84-99
9. Performing Organization Name and Address: Midwest Roadside Safety Facility (MwRSF) University of Nebraska-Lincoln 1901 Y St., Bldg. C Lincoln, NE 68588-0601		10. Project/Task/Work Unit No.
		11. Contract (C) or Grant (G) No. DTFH61-98-P-00287
12. Sponsoring Organization Name and Address: Federal Highway Administration Turner-Fairbank Highway Research Center Safety Design Division (HSR-20) 6300 Georgetown Pike McLean, Virginia 22101-2296		13. Type of Report and Period Covered: Draft Report 1998-1999
		14. Sponsoring Agency Code

15. Supplementary Notes

Prepared in cooperation with U.S. Department of Transportation, Federal Highway Administration

16. Abstract (Limit: 200 words)

Two approach guardrail transitions were modeled with BARRIER VII in order to determine the critical impact point (CIP) for each system. The computer simulation modeling was performed accordiog to the TL-3 impact conditions found in NCHRP Report No. 350 (2). The first transition system consisted of a nested W-beam rail with attached rubrail and was supported by steel wide-flanged posts. For the nested W-beam system, the CIP was determined to occur for an impact 1,905-mm upstream from the centerline of the steel space tube. The second transition consisted of a nested thrie beam rail with a backup steel tube member which was supported by steel wide-flanged posts and included a special post spacing. For the nested thrie beam system, the CIP was determined to occur for an impact between post nos. 1 and 2.

17. Document Analysis/Descriptors: Highway Safety, Guardrail Longitudinal Barrier, Approach Guardrail Transition	Roadside Appurtenances, Computer Simulation, Barrier VII	18. Availability Statement: No restrictions. Document available from: National Technical Information Services, Springfield, Virginia 22161	
19. Security Class (this report): Unclassified	20. Security Class (this page): Unclassified	21. No. of Pages: 39	22. Price

DISCLAIMER STATEMENT

The contents of this report reflect the views of the authors who are responsible for the facts and the accuracy of the data presented herein. The contents do not necessarily reflect the official views or policies of the Federal Highway Administration. This report does not constitute a standard, specification, or regulation.

ACKNOWLEDGMENTS

The authors wish to acknowledge several sources that made a contribution to this project: (1) the Federal Highway Administration for funding this research effort; and (2) Charlie McDevitt, P.E., Project Manager, for all his valuable input and support in supplying background information for this project.

TABLE OF CONTENTS

Page

TECHNICAL REPORT DOCUMENTATION PAGE i

DISCLAIMER STATEMENT ii

ACKNOWLEDGMENTS iii

TABLE OF CONTENTS iv
- List of Figures v
- List of Tables vi

1 INTRODUCTION 1
- 1.1 Background 1
- 1.2 Objective 2
- 1.3 Scope 3

2 DESIGN DETAILS - NESTED W-BEAM TRANSITION 4

3 COMPUTER SIMULATION - NESTED W-BEAM TRANSITION 7

4 DESIGN DETAILS - NESTED THRIE BEAM TRANSITION 9

5 COMPUTER SIMULATION - NESTED THRIE BEAM TRANSITION 16

6 SUMMARY AND CONCLUSIONS 18

7 REFERENCES 19

8 APPENDICES 20
- APPENDIX A - BARRIER VII COMPUTER MODELS - BARRIER AND VEHICLE 21
- APPENDIX B - TYPICAL BARRIER VII INPUT DATA - NWRR5.DAT AND NWRR5M.DAT 25
- APPENDIX C - COMPUTER SIMULATION RESULTS - NESTED W-BEAM TRANSITION 30
- APPENDIX D - BARRIER VII COMPUTER MODEL - BARRIER 33
- APPENDIX E - TYPICAL BARRIER VII INPUT DATA - NEBT2RUN IB2N.DAT 35
- APPENDIX F - COMPUTER SIMULATION RESULTS - NESTED THRIE BEAM TRANSITION 38

List of Figures

Page

1. Layout and Design Details for Nested W-Beam Transition 5
2. Design Details for Nested W-Beam Transition (Continued) 6
3. Layout and Design Details for Nested Thrie Beam Transition 10
4. Design Details for Nested Thrie Beam Transition (Continued) 11
5. Design Details for Nested Thrie Beam Transition (Continued) 12
6. Design Details for Nested Thrie Beam Transition (Continued) 13
7. Post Details for Nested Thrie Beam Transition 14
8. Concrete Buttress Details for Nested Thrie Beam Transition 15

List of Tables

Page

C-1. Computer Simulation Test Matrix and Results for Nested W-Beam Transition without Crushable Spacer Tube 31
C-2. Computer Simulation Test Matrix and Results for Nested W-Beam Transition with Crushable Spacer Tube 32
F-1. Computer Simulation Test Matrix and Results for Nested Thrie Beam Transition with Backup Tube Rail 39

1 INTRODUCTION

1.1 Background

Approach guardrail transitions are commonly used to provide structural continuity between a flexible guardrail system adjacent to the roadway and a rigid railing system located at the edge of a bridge deck. Typically, approach guardrail transitions are designed to incorporate a gradual increase in lateral stiffness in orderto reduce the potential for an impacting vehicle to snag or pocket near the end of the bridge railing. In the past, the increase in lateral stiffness has been accomplished by incorporating one or more of several acceptable methods. Common methods for increasing the lateral stiffness include providing a reduced post spacing, lengthening the posts in order to increase embedment depth and post-soil forces, using thrie beam rail in place of W-beam rail, and nesting the guardrail beams. Rubrails, typically cousistingof eithera steel channel or W-beam rail placed below the mainrail, also have been used to eliminate the potential for wheel snagging on the upstream end of a rigid bridge railing.

Since the mid-1980's, several research studies were conducted to develop, crash test, and evaluate transition designs that incorporated the common strengthening techniques. As a result of these crash test programs that were largely based on crash tests with passenger sedans, several transition designs were found to be acceptable according to the evaluation criteria found in the National Cooperative Highway Research Program (NCHRP) Report No. 230 *Recommended Procedures for the Safety Performance Evaluation of Highway Appurtenances* (1). These criteria required that the transition system perform acceptably when crash tested with a 2,041-lb sedan impacting at a speed of 96.56 km/hr and an angle of 25 degrees. The impact location for this crash test was specified to be 4,572-mm upstream from the second system or bridge railing.

In 1993, NCHRP published Report No. 350 *Recommended Procedures for the Safety Performance Evaluation of Highway Features* which included revised crash test procedures and evaluation criteria for approach guardrail transitions (2). Due to the recent increase in popularity of light trucks and sport utility vehicles, the sedan test vehicle was replaced with a ¾-ton pickup truck having a mass of 2,000 kg. Although the impact angle remained the same, the impact speed increased from 96.56 km/hr to 100 km/hr. In addition, the impact location is now to be determined as the predicted worst case location referred to as the critical impact point (CIP). General guidelines for determining CIP's are provided in NCHRP 350 in the form of graphical charts and tables. However, it is recommended that the CIP be determined by performing computer simulation modeling of the specific approach guardrail transition system. The most common computer program used in the analysis and design of approach guardrail transitions is the 2-dimensional, dynamic nonlinear finite-element code called BARRIER VII (3).

Following the adoption of the NCHRP 350 guidelines by the Federal Highway Administration (FHWA), State Highway Agencies will soon be required to use transition designs that meet NCHRP 350 safety standards. Therefore, existing transition designs previously crashed tested with sedans according to NCHRP 230 guidelines must be re-evaluated using pickup truck crash tests according to the new NCHRP 350 impact standards.

1.2 Objective

The objective of this research project was to determine the CIP for two approach guardrail transition designs that will be later crash tested using the Test Level 3 (TL-3) impact conditions of NCHRP 350. The first transition system, consisting of a nested W-beam upper rail and a lower rubrail, is supported by steel posts with a reduced post spacing. This transition design is attached to

a safety shape concrete bridge railing. The second transition system, consisting of a nested thrie beam rail and a backup steel tubel, is supported by steel posts with a special post spacing. This transition system is attached to a concrete buttress with a flared end section.

1.3 Scope

The scope of this project was completed by performing a series of computer simulation runs with BARRIER VII to identify the CIP along the length of each transition section. Finally, the simulation results were analyzed, evaluated, and documented.

2 DESIGN DETAILS - NESTED W-BEAM TRANSITION

The first transition system, shown in Figures 1 and 2, consisted of an upper rail and a lower rubrail in the transition region. The upper rail was constructed with nested, 12-gauge W-beam and single 12-gauge W-beam, while the lower rubrail was fabricated from two different rail sizes - a C152x12.2 channel rail and a special bent plate rail section. The guardrail in the transition region was supported by two sizes of wide-flange steel posts. Post nos. 1 and 2 were W203x19.3 by 2,286-mm long, while post nos. 3 through 9 were W152x13.4 by 1,981-mm long. The post spacing, starting at the upstream end of the concrete bridge railing, consisted of one at approximately 302 mm, four at 476 mm, and four at 952 mm. A schedule 40, 250-mm long structural steel spacer tube with a 168.3-mm outside diameter, was placed behind the nested W-beam rail and on the face of the concrete end section. The transition design was attached to a safety shape concrete bridge railing.

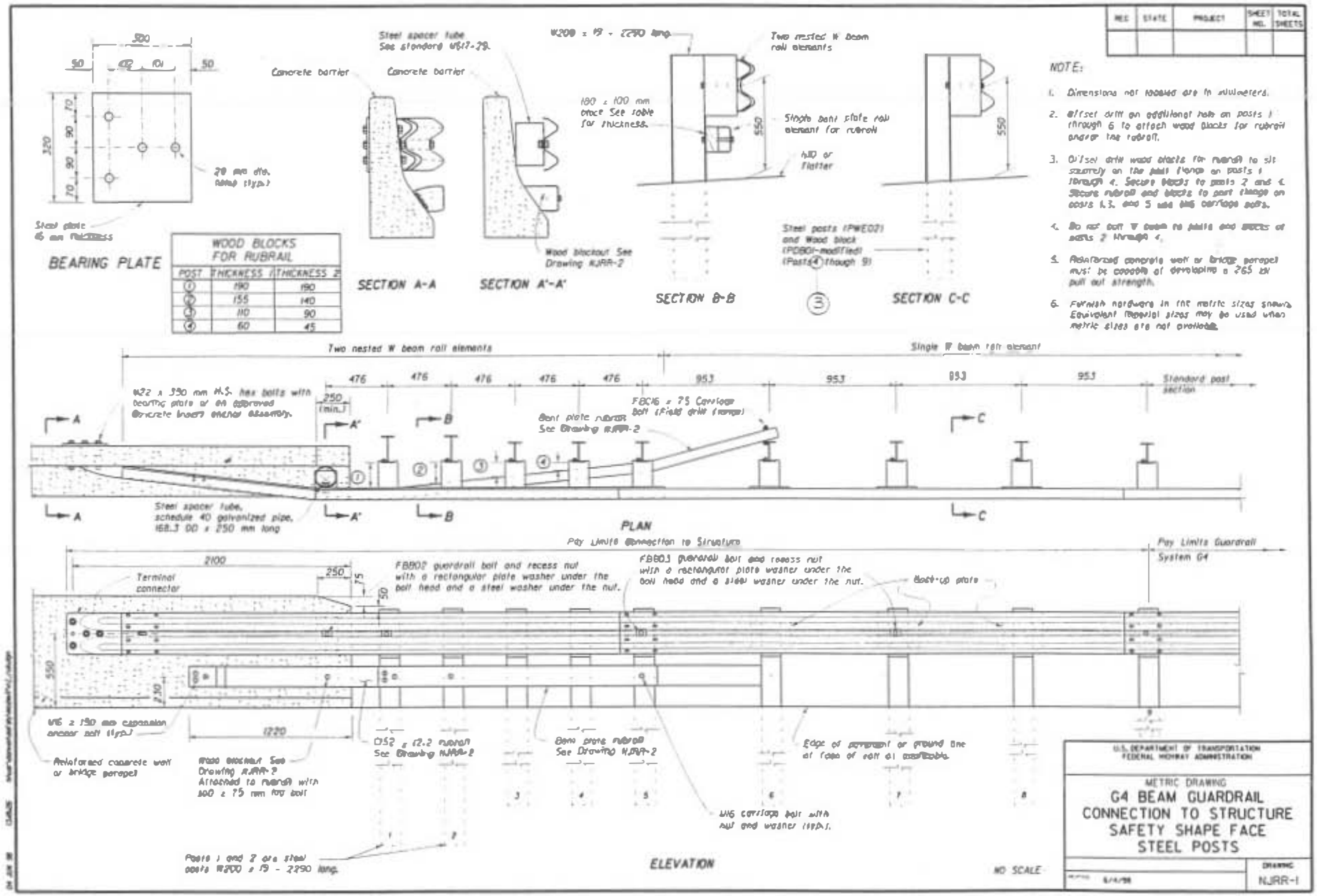

Figure 1. Layout and Design Details for Nested W-Beam Transition

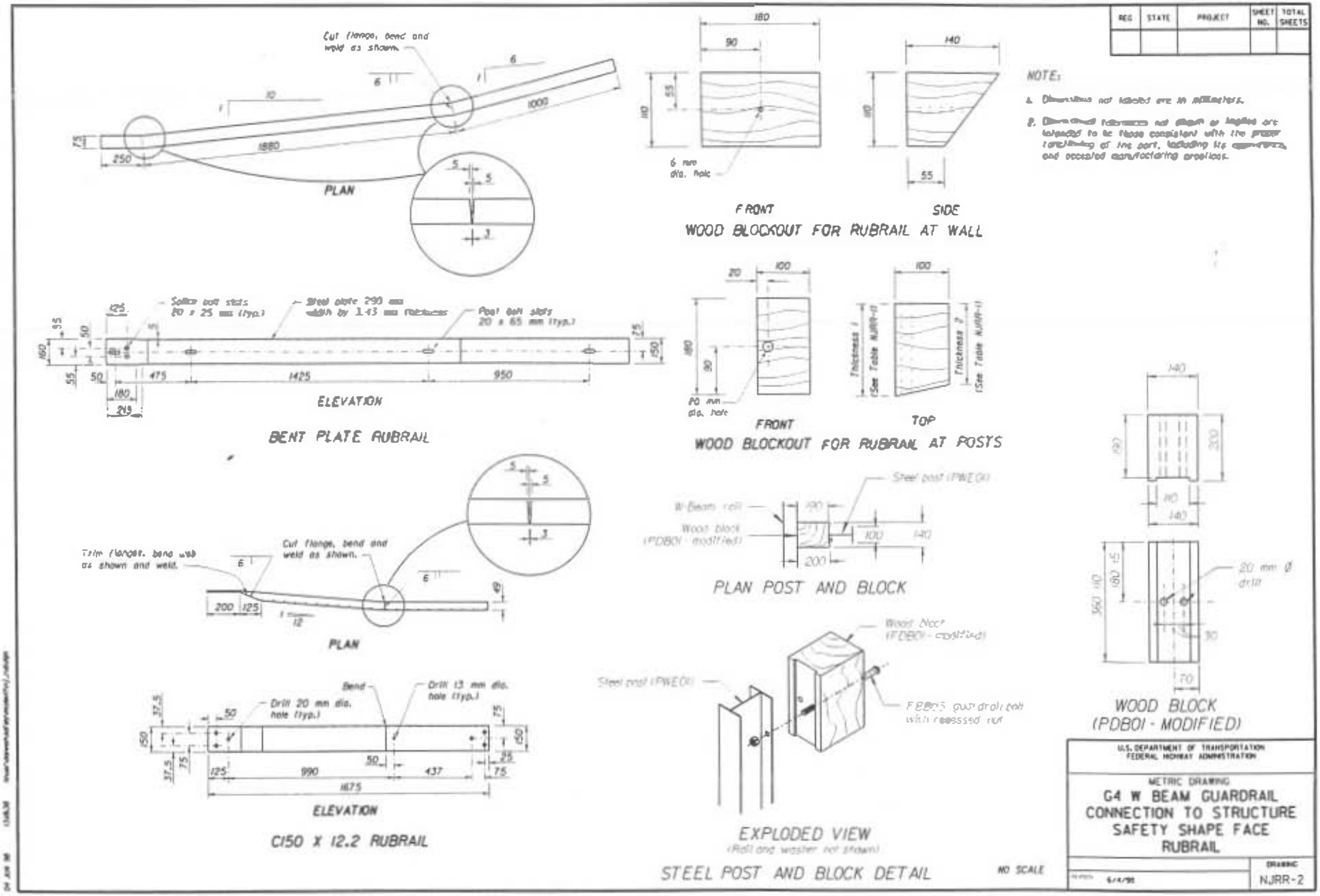

Figure 2. Design Details for Nested W-Beam Transition (Continued)

3 COMPUTER SIMULATION - NESTED W-BEAM TRANSITION

3.1 Introduction

Computersimulation modeling with BARRIER VII (3) was performed to analyze and predict the dynamic performance of the approach guardrail transition systems prior to full-scale vehicle crash testing. Computer simulation was also used to determine the critical impact point (CIP) for the nested W-beam approach guardrail transition. Several simulations were conducted modeling a 2000-kg pickup truck impacting at a speed of 100.0 km/hr and at an angle of 25 degrees. The BARRIER VII finite element models of the approach guardrail transition systems as well as the idealized finite element, 2-dimensional vehicle model for the pickup truck are shown in Appendix A. Typical computer simulation input data files for the nested W-beam transition system and pickup truck are shown in Appendix B.

3.2 Simulation Results

Fourteen computer simulation runs were performed on two configurations of the nested W-beam approach guardrail transition, as shown in Tables C-1 and C-2 of Appendix C. The first seven runs were conducted using a rigid post support in place of the steel spacer tube. The last seven runs were performed using a flexible post support to represent the steel spacer tube. The simulation results indicated that the approach guardrail transition system would satisfactorily redirect the 2,000-kg pickup truck. In addition, all structural hardware was predicted to remain functional during the vehicle impact with the approach guardrail transition system.

Following the analysis of the simulation results, the CIP was determined to occur for a pickup truck impacting 1,905-mm upstream of the centerline of the steel spacer tube. The maximum dynamic and permanent set deflections of the upper W-beam rail, as measured from the roadway

surface to the center of the rail, were 133 mm and 94, respectively. The maximum 0.010-sec average lateral and longitudinal decelerations were 13.6 and 13.3 g's, respectively. The peak 0.050-sec average impact force perpendicular to the approach guardrail transition was 282.1 kN. The pickup truck became parallel to the approach guardrail transition at 0.203 sec with a velocity of 75.4 km/hr. At 0.266 sec after impact, the pickup truck exited the approach guardrail transition with a velocity of 72.2 km/hr and at an angle of 5.0 degrees.

4 DESIGN DETAILS - NESTED THRIE BEAM TRANSITION

The second transition system, shown in Figures 3 through 8, consisted of a thrie beam rail and a special tube backup rail in the transition region. The corrugated rail was constructed with nested, 12-gauge thrie beam which was 3,810-mm long. The special backup rail, fabricated from 102-mm x 102-mm x 7.9-mm ASTM A500 Grade B structural steel tubing, was positioned between post no. 1 and the upstream end of the concrete buttress. Fabricated steel hardware was used at each end of the tube member to provide a rigid attachment. Timber blockouts were attached to the top and bottom surfaces of the tube member to allow for a timber spacer to be used to block the rail away from the tubeat a location of 952-mm downstream of post no. 1. This timber spacer and backup tube rail combination was used to simulate a guardrail post in the span were a post could not be installed due to the existence of the bridge substructure. The guardrail in the transition region was supported by two sizes of wide-flange steel posts. Post nos. 1 and 2 were Wt 52x37.2 by 2,591-mm long, while post nos. 3 through 6 were W152x22.3 by 2,134-mm long. The post spacing, starting at the upstream end of the concrete buttress, consisted of one at approximately 296 mm, four at 952 mm, and one at 1,905 mm. The transition design was attached to a concrete buttress which can be used with either safety shape, rectangular, or open concrete bridge railing systems.

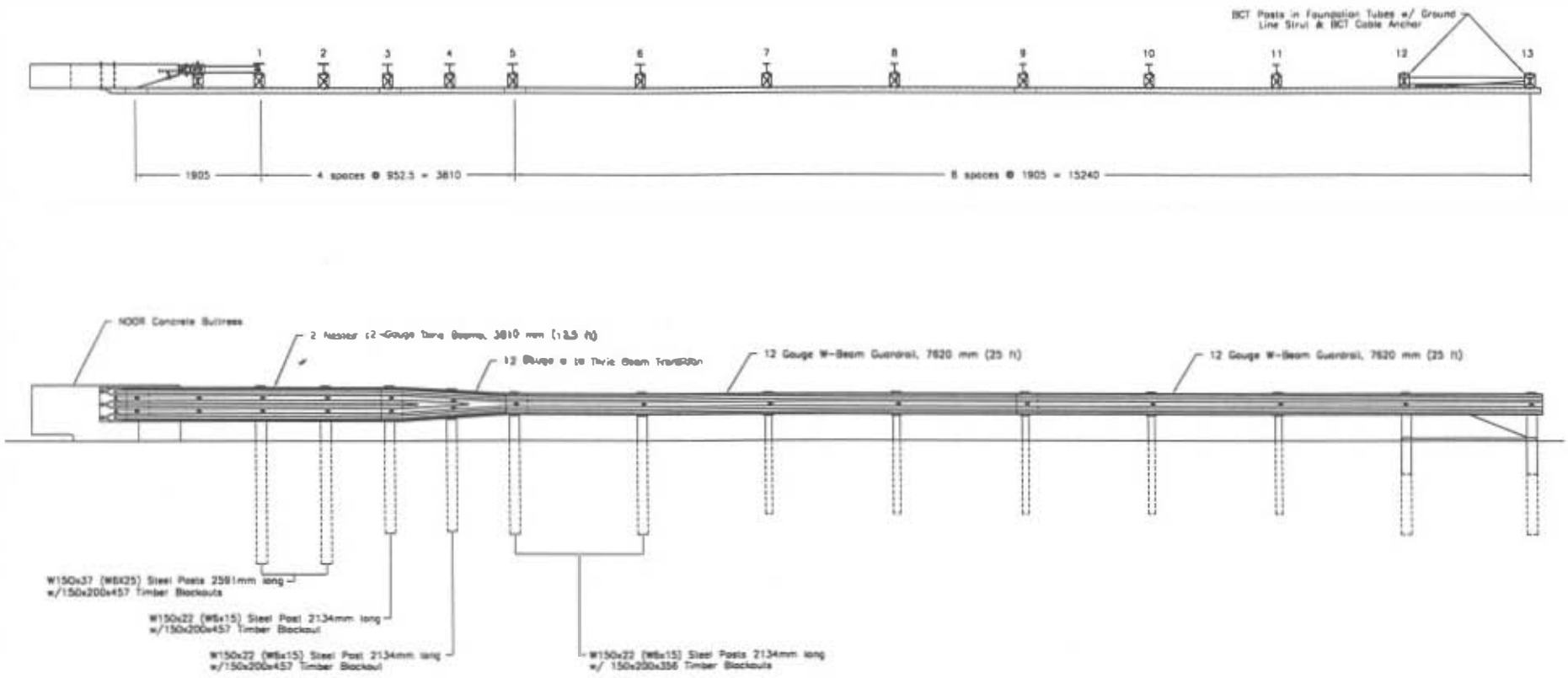

Figure 3. Layout and Design Details for Nested Thrie Beam Transition

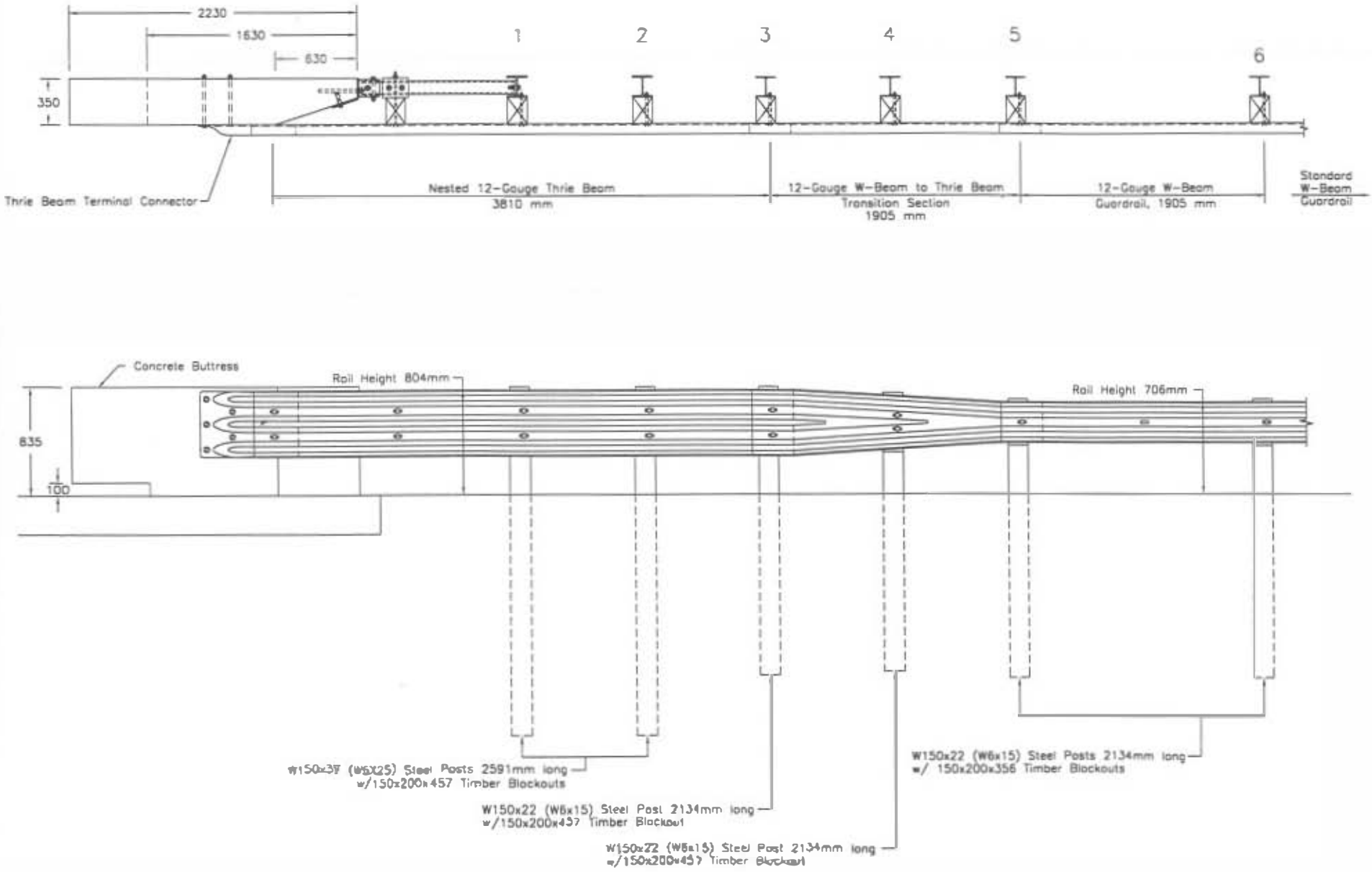

Figure 4. Design Details for Nested Thrie Beam Transition (Continued)

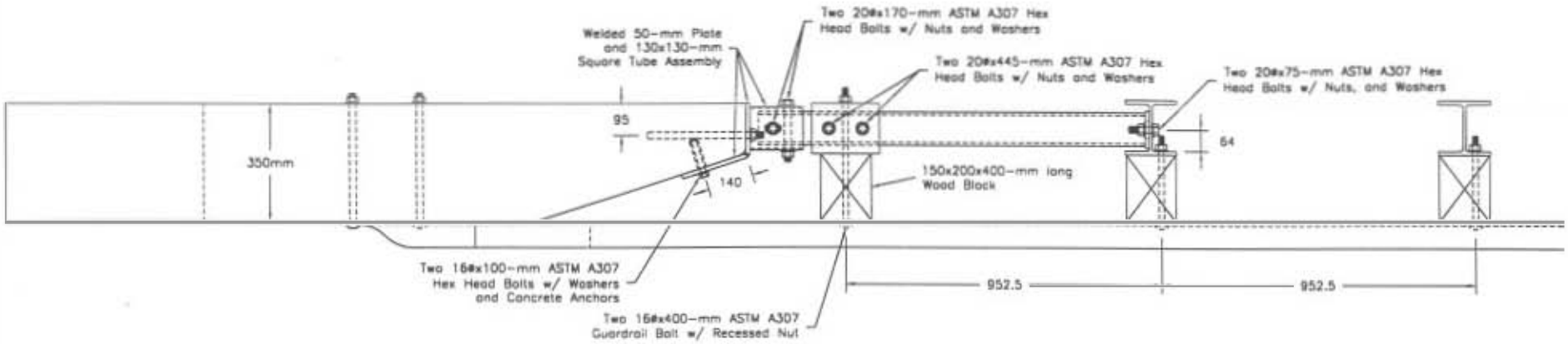

PLAN VIEW

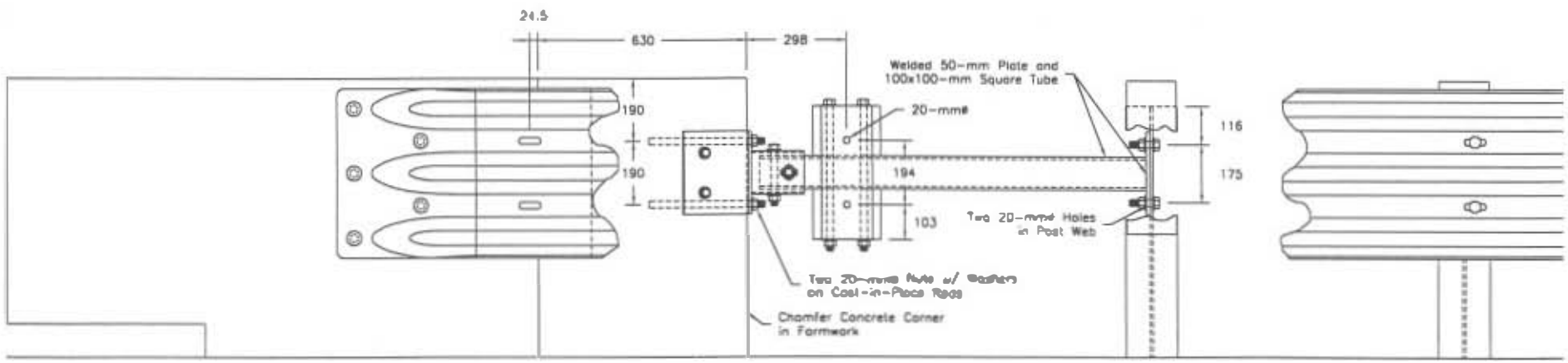

ELEVATION VIEW

Figure 5. Design Details for Nested Thrie Beam Transition (Continued)

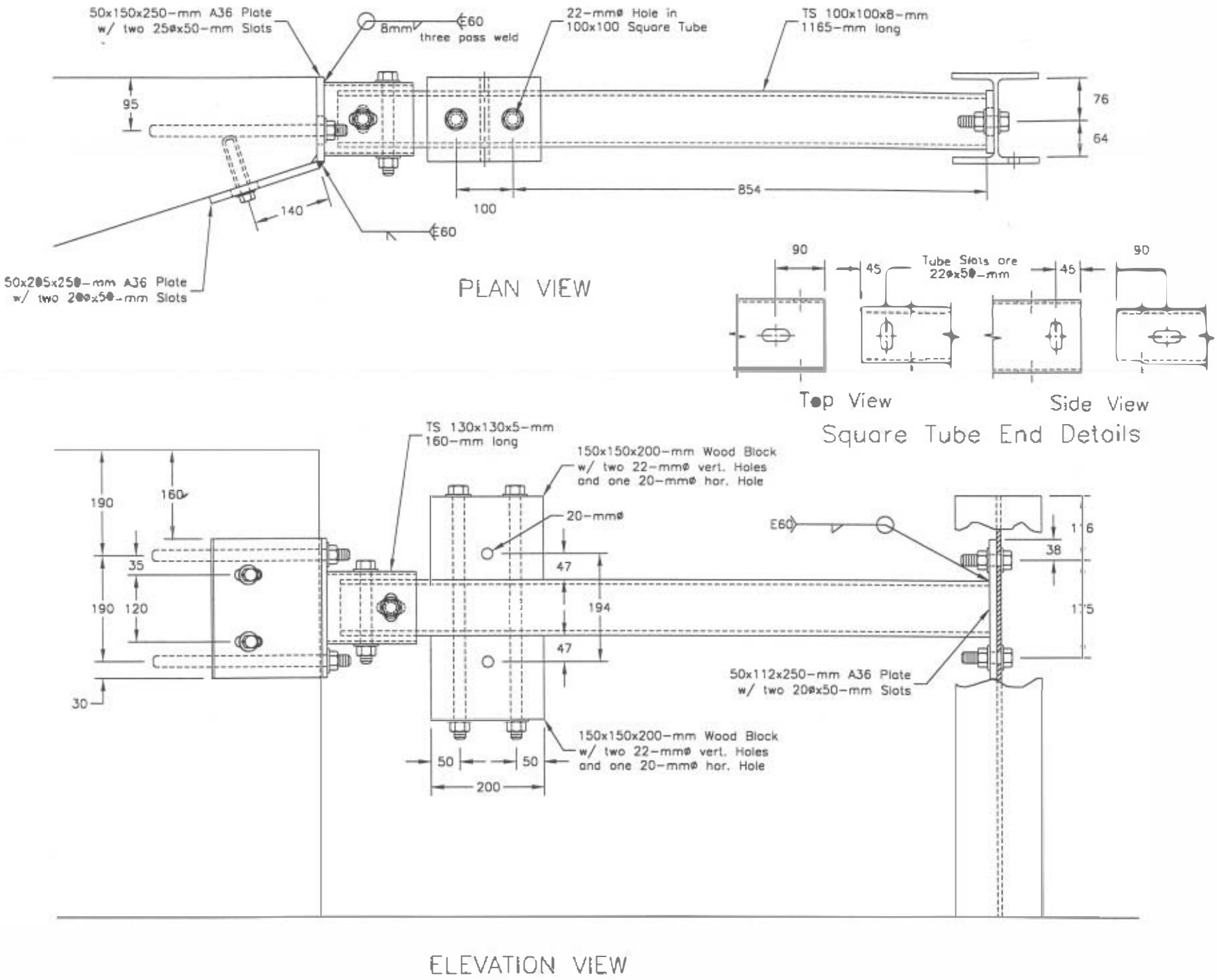

Figure 6. Design Details for Nested Thrie Beam Transition (Continued)

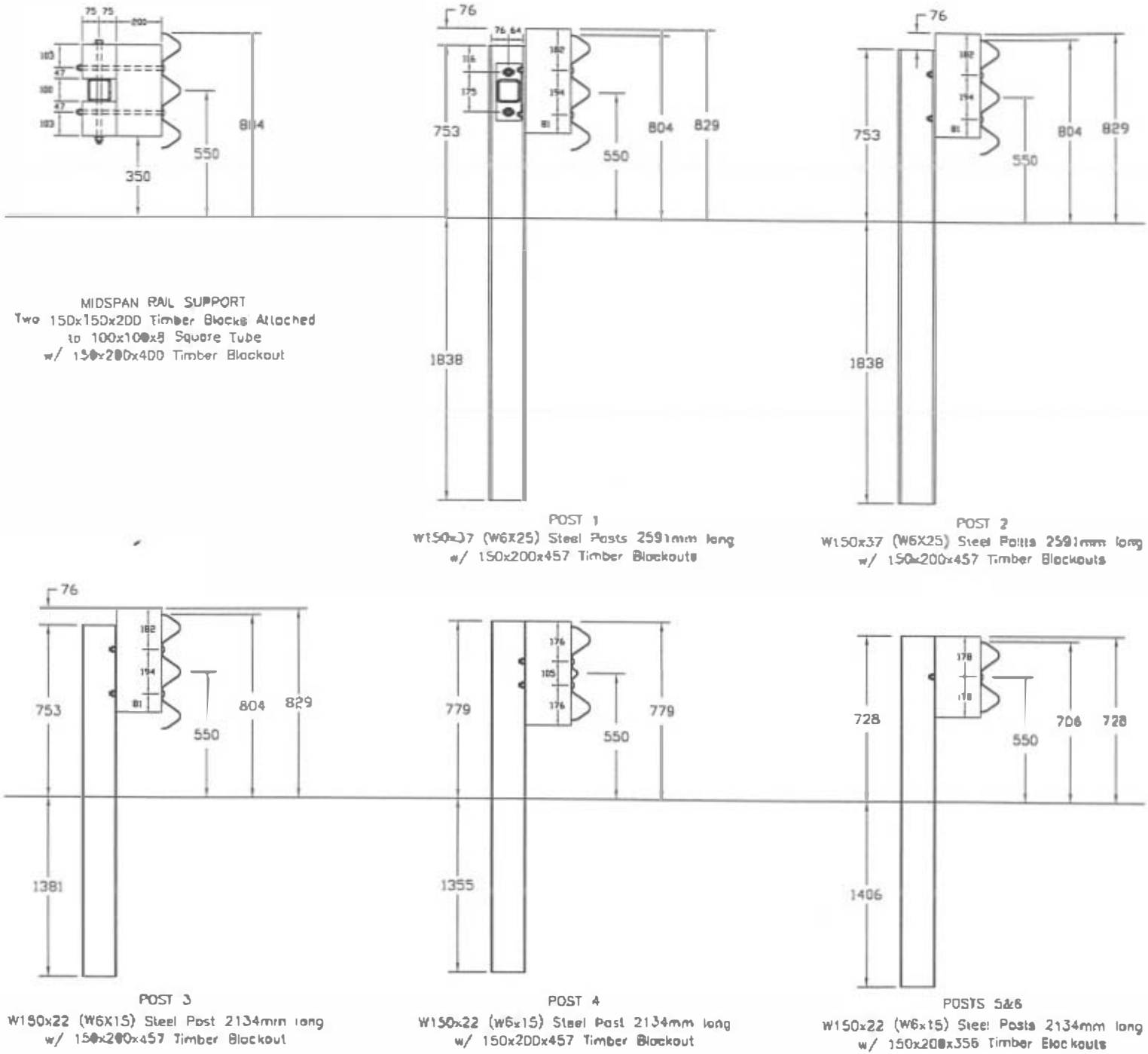

Figure 7. Post Details for Nested Thrie Beam Transition

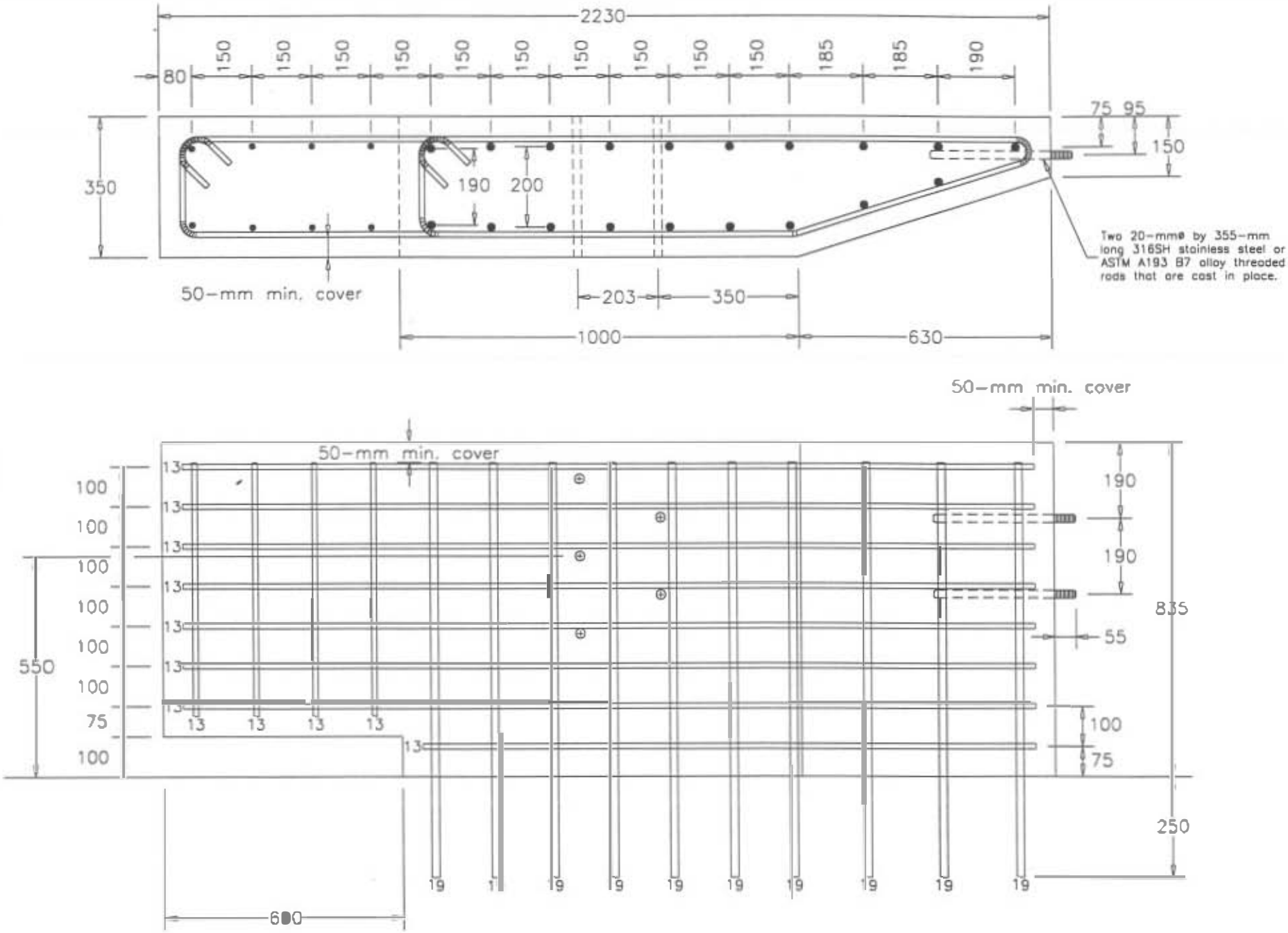

Figure 8. Concrete Buttress Details for Nested Thrie Beam Transition

5 COMPUTER SIMULATION - NESTED THRIE BEAM TRANSITION

5.1 Introduction

Computer simulation modeling with BARRIER VII (3) was performed to analyze and predict the dynamic performance of the approach guardrail transition systems prior to full-scale vehicle crash testing. Computer simulation was also used to determine the critical impact point (CIP) for the nested thrie beam approach guardrail transition. Several simulations were conducted modeling a 2000-kg pickup truck impacting at a speed of 100.0 km/hr and at an angle of 25 degrees. The BARRIER VII finite element model of the approach guardrail transition system is shown in Appendix D. A typical computer simulation input data file for the nested thrie beam transition system and pickup truck are shown in Appendix E.

5.2 Simulation Results

Six computer simulation runs were performed on the nested thrie beam approach guardrail transition, as shown in Table F-1 of Appendix F. The simulation results indicated that the approach guardrail transition system would satisfactorily redirect the 2,000-kg pickup truck.

Following the analysis of the simulation results, the CIP was determined to occur for a pickup truck impacting 1,725-mm upstream of the tapered concrete end section or at the midspan location of post nos. 1 and 2. The maximum dynamic and permanent set deflections of the thrie beam rail, as measured from the roadway surface to the center of the rail, were 170 mm and 141, respectively. The maximum 0.010-sec average lateral and longitudinal decelerations were 12.5 and 13.3 g's, respectively. The peak 0.050-sec average impact force perpendicular to the approach guardrail transition was 133.8 kN. The pickup truck became parallel to the approach guardrail transition at 0.193 sec with a velocity of 67.8 km/hr. At 0.325 sec after impact, the pickup truck

exited the approach guardrail transition with a velocity of 64.9 km/hr and at an angle of 13.3 degrees.

6 SUMMARY AND CONCLUSIONS

Two approach guardrail transitions were modeled with BARRIER VII in order to determine the CIP for each system. The computer simulation modeling was performed according to the TL-3 impact conditions found in NCHRP Report No. 350 (2). For the nested W-beam system with attached rubrail, the CIP was determined to occur for an impact 1,905-mm upstream from the centerline of the steel space tube. For the nested thrie beam system with attached backup steel tube, the CIP was determined to occur for an impact between post nos. 1 and 2.

7 REFERENCES

1. Michie, J.D., *Recommended Procedures for the Safety Performance Evaluation of Highway Appurtenances*, National Cooperative Highway Research Program (NCHRP) Report No. 230, Transportation Research Board, Washington, D.C., March 1981.

2. Ross, H.E., Sicking, D.L., Zimmer, R.A. and Michie, J.D., *Recommended Procedures for the Safety Performance Evaluation of Highway Features*, National Cooperative Research Program (NCHRP) Report No. 350. Transportation Research Board, Washington, D.C., 1993.

3. Powell, G.H., *BARRIER VII: A Computer Program For Evaluation of Automobile Barrier Systems*, Prepared for: Federal Highway Administration, Report No. FHWA RD-73-51, April 1973.

8 APPENDICES

APPENDIX A

BARRIER VII COMPUTER MODELS - BARRIER AND VEHICLE

Beam Member Types	1	1	2	2	2	2	2	2	3									
Post Member Numbers	65	66	67	68	69	70	71	72	73									
Post Locations (in.)	0	75	150	225	300	375	450	525	600	6								
Actual Post Numbers	17	16	15	14	13	12	11	10	9									
Node Numbers	1	2	3	4	5	6	7	8	9	10	11	12	13	14	15	16	17	18
Beam Member Numbers	0	2	3	4	5	6	7	8	9	10	0	12	13	14	15	16	17	18
Beam Member Types	1	1	1	1	1	1	1	1	1	1	1	1	1	1	1	1	2	2

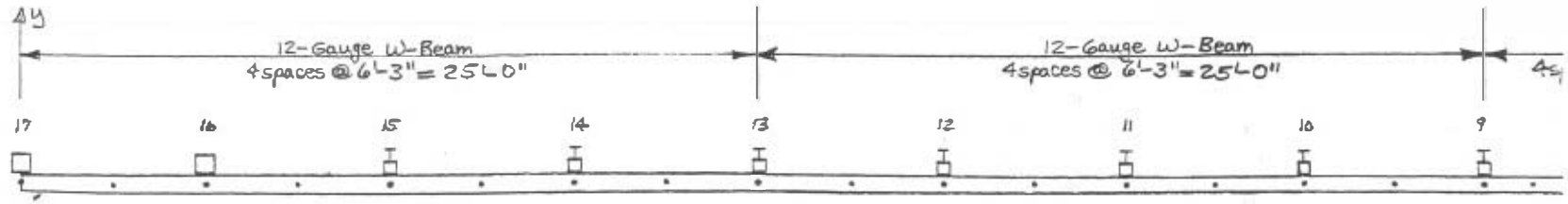

NESTED W-BEAM TRANSITION TO SAFETY SHAPE PARAPET WITH RUBRAIL (TL-3 CONDITIONS)

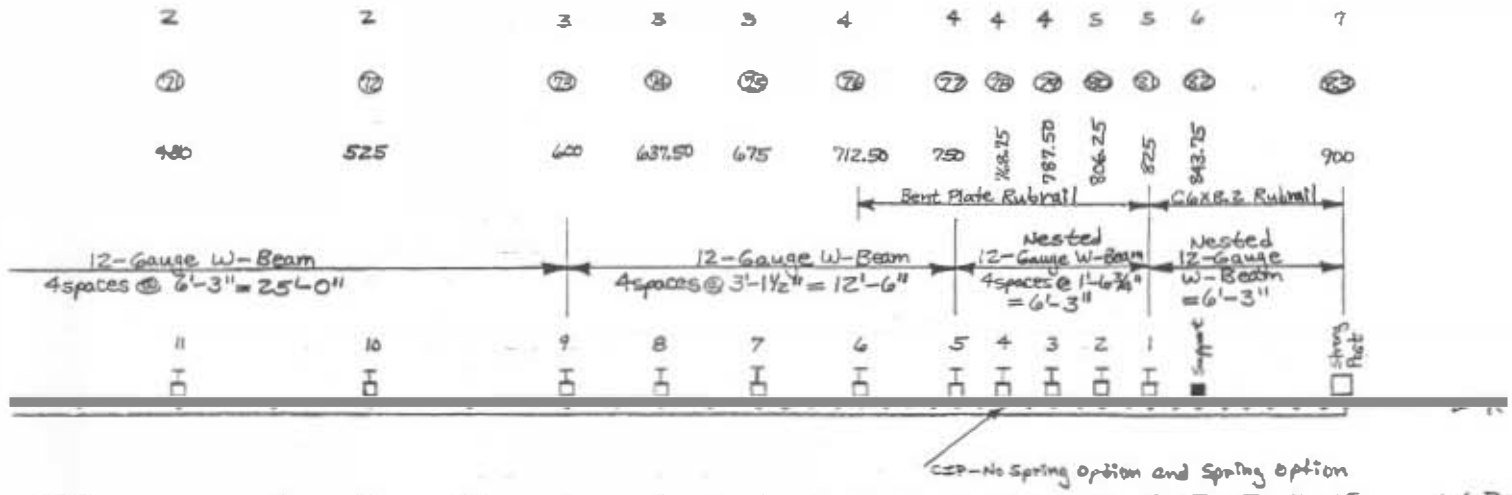

CIP-No Spring Option and Spring Option

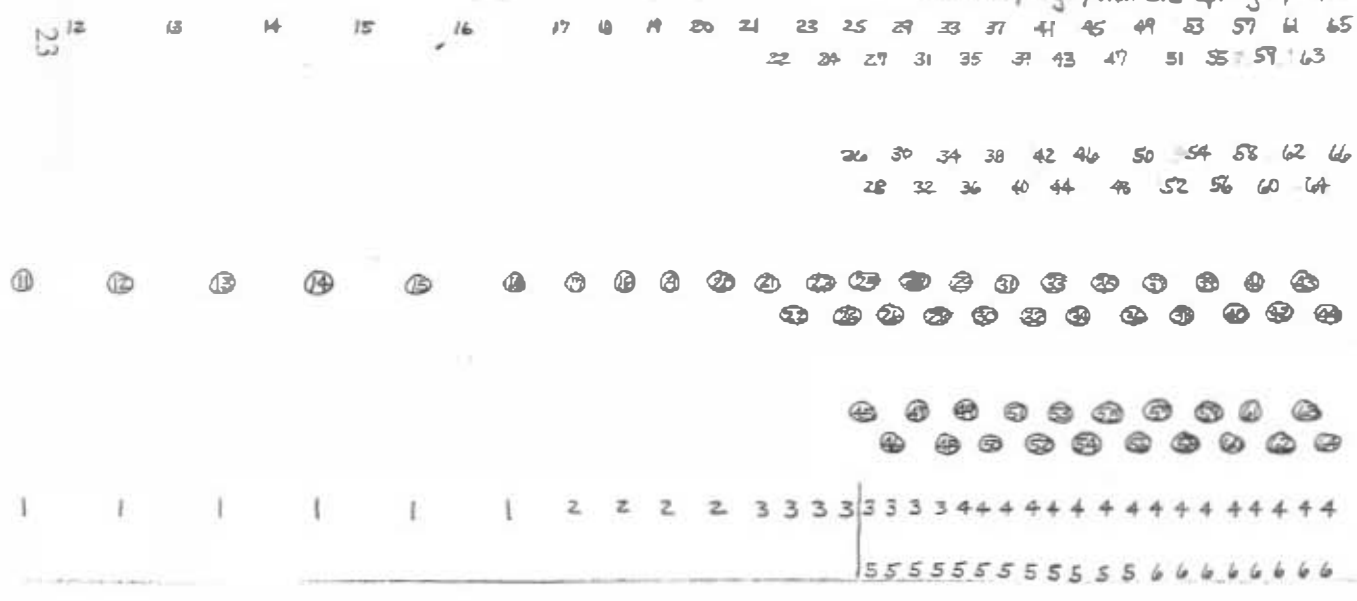

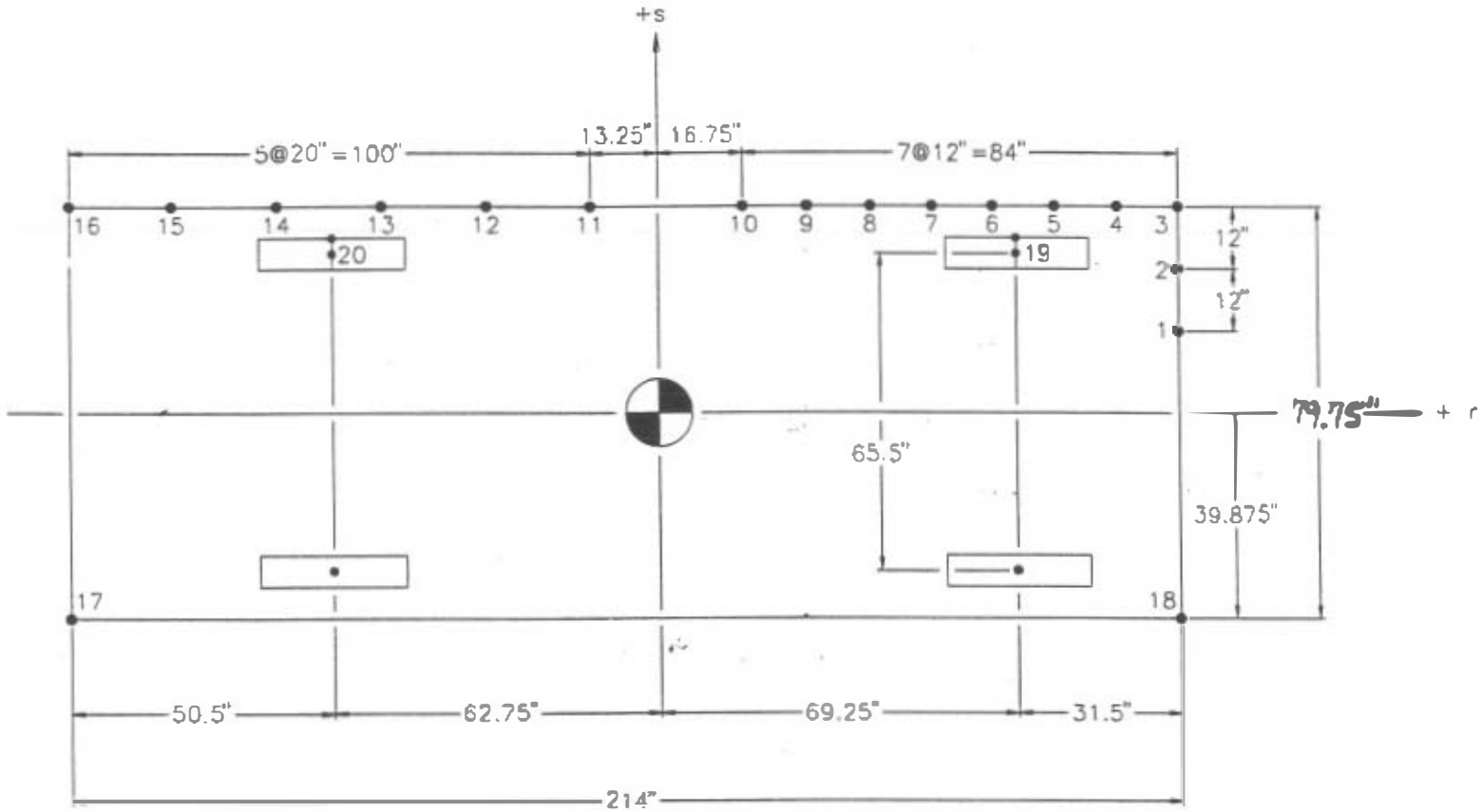
+s
5@20" = 100"
13.25"
16.75"
7@12" = 84"
16
15
14
13
12
11
10
9
8
7
6
5
4
3
2
1
20
19
12"
12"
79.75"
+r
65.5"
39.875"
17
18
50.5"
62.75"
69.25"
31.5"
214"

APPENDIX B

TYPICAL BARRIER VII INPUT DATA - NWRR5.DAT AND NWRR5M.DAT

```
TRANSITION TO SAFETY SHAPE - MWRR5.DAT - 12-GA. NESTED W-BEAM RAILS W/ CHANNEL AND BENT PLATE RUBRAILS (NODE 37/38)
  66   27   25    2   83   15    2    0
   0.0001    0.0001      0.50  300    0        1.0    1
   1    5    5    5    5    5    1
   1       0.0       0.0
   3      75.00      0.0
   5     150.00      0.0
   7     225.00      0.0
   9     300.00      0.0
  11     375.00      0.0
  13     450.00      0.0
  15     525.00      0.0
  17     600.00      0.0
  19     637.50      0.0
  21     675.00      0.0
  25     712.50      0.0
  26     712.50      0.0
  33     750.00      0.0
  34     750.00      0.0
  37     768.75      0.0
  38     768.75      0.0
  41     787.50      0.0
  42     787.50      0.0
  45     806.25      0.0
  46     806.25      0.0
  49     825.00      0.0
  50     825.00      0.0
  53     843.75      0.0
  54     843.75      0.0
  65     900.00      0.0
  66     900.00      0.0
   1    3    1    1       0.0
   3    5    1    1       0.0
   5    7    1    1       0.0
   7    9    1    1       0.0
   9   11    1    1       0.0
  11   13    1    1       0.0
  13   15    1    1       0.0
  15   17    1    1       0.0
  17   19    1    1       0.0
  19   21    1    1       0.0
  21   25    3    1       0.0
  25   33    3    2       0.0
  33   37    1    2       0.0
  37   41    1    2       0.0
  41   45    1    2       0.0
  45   49    1    2       0.0
  49   53    1    2       0.0
  53   65    5    2       0.0
  26   34    3    2       0.0
  34   38    1    2       0.0
  38   42    1    2       0.0
  42   46    1    2       0.0
  46   50    1    2       0.0
  50   54    1    2       0.0
  54   66    5    2       0.0
   1   45       0.35
  65   63   61   59   57   55   53   51   49   47
  45   43   41   39   37   35   33   31   29   27
  25   24   23   22   21   20   19   18   17   16
  15   14   13   12   11   10    9    8    7    6
   5    4    3    2    1
   2   13       0.35
  66   64   62   60   58   56   54   52   50   48
  46   44   42
 100    6
   1      2.30      1.99     37.50   30000.0      6.92      99.5      68.5 0.10  12-Gauge W-Beam Rail
   2      2.30      1.99     18.75   30000.0      6.92      99.5      68.5 0.10  12-Gauge W-Beam Rail
   3      2.30      1.99      9.375  30000.0      6.92      99.5      68.5 0.10  12-Gauge W-Beam Rail
   4      4.60      3.98      9.375  30000.0     13.84     199.0     137.0 0.10  Nested 12-Gauge W-Beam Rail
   5      1.42      1.58      9.375  30000.0      5.4       5.0      23.15 0.10  Bent Plate Rubrail (Fy=56.9k)
   6     0.693      2.40      9.375  30000.0      8.2       5.0      17.71 0.10  C6x8.2 Channel Rail (Fy=86.4k)
 300    7
   1     21.65       0.0     1000.0   1000.0    250.0   10000.0   10000.0 0.10  Strong Post Anchor
    200.0     200.0       2.0       2.0
   2     21.65       0.0       4.00      5.00     54.0      92.88    270.62 0.10  W6x9x6' Post (43.3" embedment depth)
     6.0      15.0      16.0      16.0
   3     21.65       0.0       4.00      5.00     54.0      92.88    336.42 0.10  W6x9x6.5' Post (49.4" embedment depth)
     8.0      15.0      16.0      16.0
   4     21.65      9.06       4.00      5.00     58.5      92.88    336.42 0.10  W6x9x6.5' Post (49.4" embedment depth)
     8.0      20.0      16.0      16.0
   5     21.65      9.06       8.00      8.00     97.5     116.10    553.59 0.10  W8x13x7.5' Post (61.5" embedment depth
    10.0      30.0      16.0      16.0
   6     21.65      9.06       0.50   10000.0    250.0       5.0   10000.0 0.10  Rigid Post In Y-Direction Only
    200.0     200.0       2.0       2.0
   7     21.65      9.06     1000.0   1000.0    250.0   10000.0   10000.0 0.10  Strong Post Anchor
    200.0     200.0       2.0       2.0
```

```
 1    1    2   16    1  101        0.0        0.0        0.0
17   17   18   20    1  102        0.0        0.0        0.0
21   21   27   24    1  103        0.0        0.0        0.0
25   25   27   28    2  103        0.0        0.0        0.0
29   33   35   44    2  104        0.0        0.0        0.0
45   28   28   56    2  105        0.0        0.0        0.0
57   50   52   64    2  106        0.0        0.0        0.0
65    1        66    2  301        0.0        0.0        0.0        0.0        0.0
67    5        72    2  302        0.0        0.0        0.0        0.0        0.0
73   17        75    2  303        0.0        0.0        0.0        0.0        0.0
76   25   26   77    8  304        0.0        0.0        0.0        0.0        0.0
78   37   38   79    4  304        0.0        0.0        0.0        0.0        0.0
80   45   46   81    4  305        0.0        0.0        0.0        0.0        0.0
82   53   54             306        0.0        0.0        0.0        0.0        0.0
83   65   66             307        0.0        0.0        0.0        0.0        0.0
 4400.0   40000.0   20    6    4    0    1
 1     0.055      0.12      6.00      17.0
 2     0.057      0.15      7.00      18.0
 3     0.062      0.18     10.00      12.0
 4     0.110      0.35     12.00       6.0
 5      0.35      0.45      6.00       5.0
 6      1.45      1.50     15.00       1.0
 1    100.75    15.875    1      12.0    1    0    0    0
 2    100.75    27.875    1      12.0    1    0    0    0
 3    100.75    39.875    2      12.0    1    0    0    0
 4     88.75    39.875    2      12.0    1    0    0    0
 5     76.75    39.875    2      12.0    1    0    0    0
 6     64.75    39.875    2      12.0    1    0    0    0
 7     52.75    39.875    2      12.0    1    0    0    0
 8     40.75    39.875    2      12.0    1    0    0    0
 9     28.75    39.875    2      12.0    1    0    0    0
10     16.75    39.875    2      12.0    1    0    0    0
11    -13.25    39.875    3      12.0    1    0    0    0
12    -33.25    39.875    3      12.0    1    0    0    0
13    -53.25    39.875    3      12.0    1    0    0    0
14    -73.25    39.875    3      12.0    1    0    0    0
15    -93.25    39.875    3      12.0    1    0    0    0
16   -113.25    39.875    4      12.0    1    0    0    0
17   -113.25   -39.875    4      12.0    0    0    0    0
18    100.75   -39.875    1      12.0    0    0    0    0
19     69.25     37.75    5       1.0    1    1    0    0
20    -62.75     37.75    6       1.0    1    1    0    0
 1     69.25     32.75      0.0      608.
 2     69.25    -32.75      0.0      608.
 3    -62.75     32.75      0.0      492.
 4    -62.75    -32.75      0.0      492.
 1       0.0       0.0
 3    768.75       0.0     25.0     62.14      0.0      0.0      1.0
```

```
TRANSITION TO SAFETY SHAPE - NWRR5M.DAT - 12-GA. NESTED W-BEAM RAILS W/ CHANNEL AND BENT PLATE RUBRAILS (NODE 37/38)
  66   27   25    2   83   15    2    0
  0.0001    0.0001      0.50  300    0        1.0    1
   1    5    5    5    5    5    1
   1       0.0       0.0
   3     75.00       0.0
   5    150.00       0.0
   7    225.00       0.0
   9    300.00       0.0
  11    375.00       0.0
  13    450.00       0.0
  15    525.00       0.0
  17    600.00       0.0
  19    637.50       0.0
  21    675.00       0.0
  25    712.50       0.0
  26    712.50       0.0
  33    750.00       0.0
  34    750.00       0.0
  37    768.75       0.0
  38    768.75       0.0
  41    787.50       0.0
  42    787.50       0.0
  45    806.25       0.0
  46    806.25       0.0
  49    825.00       0.0
  50    825.00       0.0
  53    843.75       0.0
  54    843.75       0.0
  65    900.00       0.0
  66    900.00       0.0
   1    3    1    1       0.0
   3    5    1    1       0.0
   5    7    1    1       0.0
   7    9    1    1       0.0
   9   11    1    1       0.0
  11   13    1    1       0.0
  13   15    1    1       0.0
  15   17    1    1       0.0
  17   19    1    1       0.0
  19   21    1    1       0.0
  21   25    3    1       0.0
  25   33    3    2       0.0
  33   37    1    2       0.0
  37   41    1    2       0.0
  41   45    1    2       0.0
  45   49    1    2       0.0
  49   53    1    2       0.0
  53   65    5    2       0.0
  26   34    3    2       0.0
  34   38    1    2       0.0
  38   42    1    2       0.0
  42   46    1    2       0.0
  46   50    1    2       0.0
  50   54    1    2       0.0
  54   66    5    2       0.0
   1   45       0.35
  65   63   61   59   57   55   53   51   49   47
  45   43   41   39   37   35   33   31   29   27
  25   24   23   22   21   20   19   18   17   16
  15   14   13   12   11   10    9    8    7    6
   5    4    3    2    1
   2   13       0.35
  66   64   62   60   58   56   54   52   50   48
  46   44   42
 100    6
   1     2.30      1.99     37.50   30000.0      6.92      99.5      68.5 0.10  12-Gauge W-Beam Rail
   2     2.30      1.99     18.75   30000.0      6.92      99.5      68.5 0.10  12-Gauge W-Beam Rail
   3     2.30      1.99      9.375  30000.0      6.92      99.5      68.5 0.10  12-Gauge W-Beam Rail
   4     4.60      3.98      9.375  30000.0     13.84     199.0     137.0 0.10  Nested 12-Gauge W-Beam Rail
   5     1.42      1.58      9.375  30000.0      5.4       5.0      23.15 0.10  Bent Plate Rubrail (FY=56.9k)
   6    0.693      2.40      9.375  30000.0      8.2       5.0      17.71 0.10  C6x8.2 Channel Rail (FY=86.4k)
 300    7
   1    21.65       0.0     1000.0    1000.0    250.0   10000.0   10000.0 0.10  Strong Post Anchor
  200.0     200.0       2.0       2.0
   2    21.65       0.0       4.00      5.00     54.0     92.88    270.62 0.10  W6x9x6' Post 43.3" embedment depth
    6.0      15.0      16.0      16.0
   3    21.65       0.0       4.00      5.00     54.0     92.88    336.42 0.10  W6x9x6.5' Post 49.4" embedment depth
    8.0      15.0      16.0      16.0
   4    21.65      9.06       4.00      5.00     58.5     92.88    336.42 0.10  W6x9x6.5' Post 49.4" embedment depth
    8.0      20.0      16.0      16.0
   5    21.65      9.06       8.00      8.00     97.5    116.10    553.59 0.10  W8x13x7.5' Post 61.5" embedment depth
   10.0      30.0      16.0      16.0
   6    21.65      9.06       0.50     21.88    189.7       5.0    236.85 0.10  Crushable Pipe Post Y-Direction Only
  200.0     200.0       2.0       6.0
   7    21.65      9.06      10.0    1000.0    250.0   10000.0   10000.0 0.10  Strong Post Anchor
  200.0     200.0       2.0       2.0
```

```
 1    1    2   16    1  101        0.0        0.0        0.0
17   17   18   20    1  102        0.0        0.0        0.0
21   21   22   24    1  103        0.0        0.0        0.0
25   25   27   28    2  103        0.0        0.0        0.0
29   33   35   44    2  104        0.0        0.0        0.0
45   26   28   56    2  105        0.0        0.0        0.0
57   50   52   64    2  106        0.0        0.0        0.0
65    1        66    2  301        0.0        0.0        0.0        0.0        0.0
67    5        72    2  302        0.0        0.0        0.0        0.0        0.0
73   17        25    2  303        0.0        0.0        0.0        0.0        0.0
76   25   26   77    8  304        0.0        0.0        0.0        0.0        0.0
78   37   38   79    4  304        0.0        0.0        0.0        0.0        0.0
80   45   46   81    4  305        0.0        0.0        0.0        0.0        0.0
82   53   54             306        0.0        0.0        0.0        0.0        0.0
83   65   66             307        0.0        0.0        0.0        0.0        0.0
 4400.0   40000.0   20    6    4    0    1
 1     0.055      0.12      6.00      17.0
 2     0.057      0.15      7.00      18.0
 3     0.062      0.18     10.00      12.0
 4     0.110      0.35     12.00       6.0
 5      0.35      0.45      6.00       5.0
 6      1.45      1.50     15.00       1.0
 1    100.75    15.875    1      12.0    1    0    0    0
 2    100.75    27.875    1      12.0    1    0    0    0
 3    100.75    39.875    2      12.0    1    0    0    0
 4     88.75    39.875    2      12.0    1    0    0    0
 5     76.75    39.875    2      12.0    1    0    0    0
 6     64.75    39.875    2      12.0    1    0    0    0
 7     52.75    39.875    2      12.0    1    0    0    0
 8     40.75    39.875    2      12.0    1    0    0    0
 9     28.75    39.875    2      12.0    1    0    0    0
10     16.75    39.875    2      12.0    1    0    0    0
11    -13.25    39.875    3      12.0    1    0    0    0
12    -33.25    39.875    3      12.0    1    0    0    0
13    -53.25    39.875    3      12.0    1    0    0    0
14    -73.25    39.875    3      12.0    1    0    0    0
15    -93.25    39.875    3      12.0    1    0    0    0
16   -113.25    39.875    4      12.0    1    0    0    0
17   -113.25   -39.875    4      12.0    0    0    0    0
18    100.75   -39.875    1      12.0    0    0    0    0
19     69.25     37.75    5       1.0    1    1    0    0
20    -62.75     37.75    6       1.0    1    1    0    0
 1     69.25     32.75      0.0      608.
 2     69.25    -32.75      0.0      608.
 3    -62.75     32.75      0.0      492.
 4    -62.75    -32.75      0.0      492.
 1       0.0       0.0
 3    768.75       0.0      25.0     62.14      0.0       0.0       1.0
```

APPENDIX C

COMPUTER SIMULATION RESULTS - NESTED W-BEAM TRANSITION

Table C-1. Computer Simulation Test Matrix and Results for Nested W-Beam Transition without Crushable Spacer Tube

Test No.	Impact Node	Impact Distance[1] (in.)	Maximum W-Beam Dynamic Deflection (in.)	Maximum W-Beam Permanent Set Deflection (in.)	Maximum W-Beam Tension (kips)	W-Beam Deflection When Vehicle Node 3 Near W-Beam Node 53			Transition Posts Removed During Simulation	Remarks
						δ (in.) Node 51	δ (in.) Node 53	Net δ (in.)[2]		
NWRR1	29/30	112.50	7.25	3.89	83.86	NA	NA	NA	No	Ty=5[k] rubrail. Rigid support post used.
NWRR2	31/32	103.125	6.20	3.13	75.09	NA	NA	NA	No	Ty=5[k] rubrail. Rigid support post used.
NWRR3	33/34	93.75	5.53	2.61	67.29	1.40	0.01	1.39	No	Ty=5[k] rubrail. Rigid suppon post used.
NWRR4	35/36	84.375	4.76	2.50	61.94	1.75	0.05	1.70	No	Ty=5[k] rubrail. Rigid support post used.
NWRR5[3]	37/38	75.00	4.24	2.18	54.59	1.81	0.06	1.75	No	Ty=5[k] rubrail. Rigid support post used.
NWRR6	39/40	65.625	3.41	1.60	38.66	1.76	0.06	1.70	No	Ty=5[k] rubrail. Rigid support post used.
NWRR7	41/42	56.25	2.68	1.44	29.08	1.55	0.07	1.48	No	Ty=5[k] rubrail. Rigid support post used.

1 - Longitudinal distance measured from impact location to centerline of steel space tube.
2 - Relative net difference in W-beam displacement between rail nodes 51 and 53 is used to help predict pocketing or snagging when vehicle node 3 reaches rail node 53.
3 - Assumed critical impact point (CIP).

Table C-2. Computer Simulation Test Matrix and Results for Nested W-Beam Transition with Crushable Spacer Tube

Test No.	Impact Node	Impact Distance[1] (m.)	Maximum W-Beam Dynamic Deflection (in.)	Maximum W-Beam Permanent Set Deflection (in.)	Maximum W-Beam Tension (kips)	W-Beam Deflection When Vehicle Node 3 Near W-Beam Node 53			Transition Posts Removed During Simulation	Remarks
						δ (in.) @ Node 51	δ (in.) @ Node 53	Net δ (in.)[2]		
NWRRM1	29/30	112.50	7.27	4.02	80.99	NA	NA	NA	No	Ty=5[k] rubrail. Crushable support post used.
NWRRM2	31/32	103.125	6.23	3.34	70.72	NA	NA	NA	No	Ty=5[k] rubrail. Crushable support post used.
NWRRM3	33/34	93.75	5.62	2.93	57.84	NA	NA	NA	No	Ty=5[k] rubrail. Crushable support post used.
NWRRM4	35/36	84.375	5.28	3.20	48.75	4.42	3.47	0.95	No	Ty=5[k] rubrail. Crushable support post used.
NWRRM5[3]	37/38	75.00	5.23	3.69	50.96	5.20	4.48	0.72	No	Ty=5[k] rubrail. Crushable support post used.
NWRRM6	39/40	65.625	5.69	4.77	74.75	5.43	4.96	0.47	No	Ty=5[k] rubrail. Crushable support post used.
NWRRM7[4]	41/42	56.25	7.17	4.11	117.39	5.34	5.30	0.04	Yes	Ty=5[k] rubrail. Crushable support post used.

1 - Longitudinal distance measured from impact location to centerline of steel space tube.

2 - Relative net difference in W-beam displacement between rail nodes 51 and 53 is used to help predict pocketing or snagging when vehicle node 3 reaches rail node 53.

3 - Assumed critical impact point (CIP).

4 - During simulation no. NWRRM7, the support post was removed from the model. This occurred after the dynamic rail deflection at node 53 exceeded the post deflection limit of 6 in. which was based on the available crush distance of the steel spacer tube. However, the model was not revised since the post deflection limit was not exceeded in the previous simulation runs.

APPENDIX D

BARRIER VII COMPUTER MODEL - BARRIER

NEBRASKA TRANSITION DEVELOPMENT

Revised 8/4/97
Revised 11/10/97
FHWA Project — Revised 4/5/99 RF
Version B* Revised 4/7/99 RF

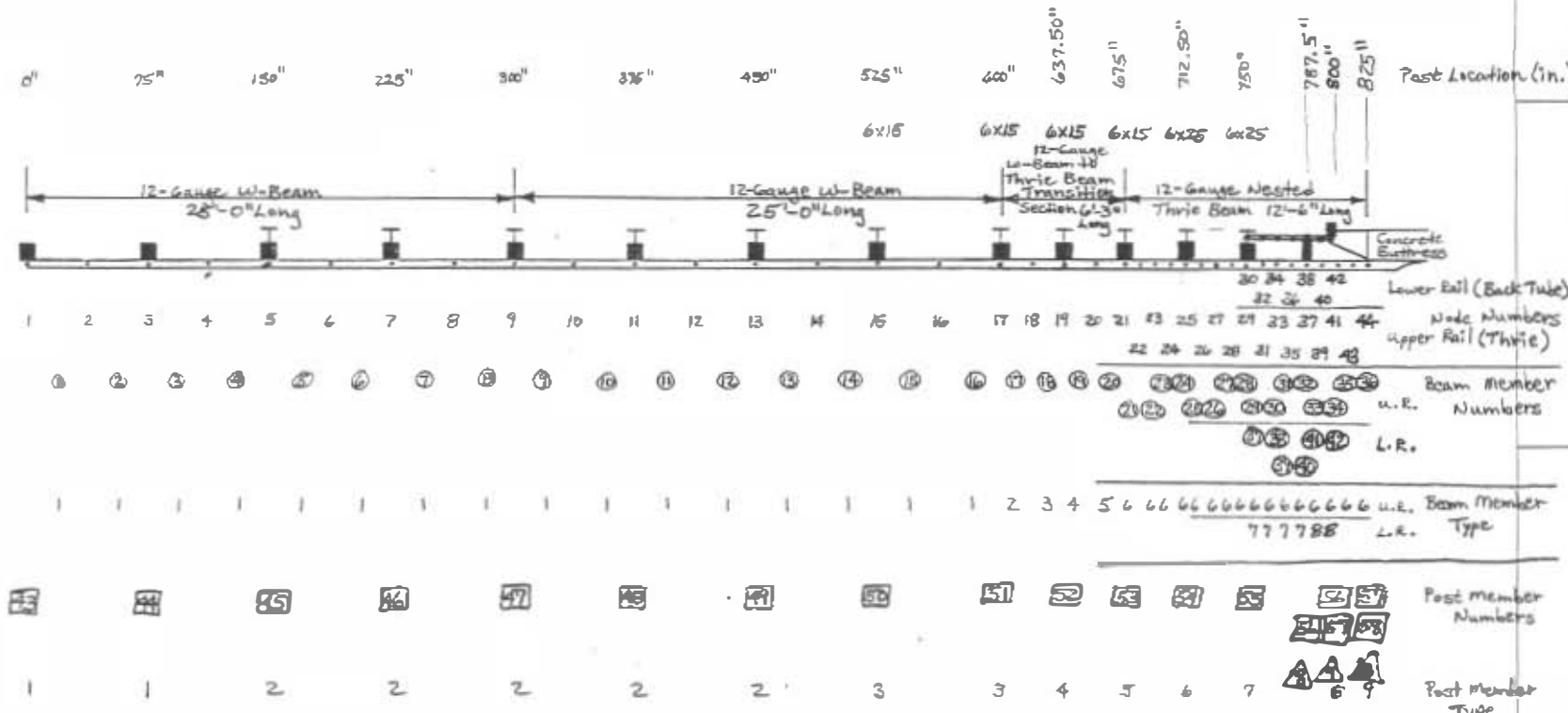

APPENDIX E

TYPICAL BARRIER VII INPUT DATA - NEBT2RUNIB2N.DAT

```
NEBRASKA'S TRANSITION TO CONCRETE BUTTRESS WITH BACKUP RAIL & NESTED THRIE - Run 1B2N @ Node 27 - Version B Extra Post/Z
 44   20   16    2   58   22    2    0
 0.00001   0.00001      0.60 6000    0       1.0    1
 10   50   50   50   50   50   10
  1       0.0        0.0
  3     75.00        0.0
  5    150.00        0.0
  7    225.00        0.0
  9    300.00        0.0
 11    375.00        0.0
 13    450.00        0.0
 15    525.00        0.0
 17    600.00        0.0
 19    637.50        0.0
 21    675.00        0.0
 25    712.50        0.0
 29    750.00        0.0
 30    750.00        0.0
 37    787.50        0.0
 38    787.50        0.0
 41    806.25        0.0
 42    800.00        0.0
 43   815.625        0.0
 44    825.00        0.0
  1    3    1    1        0.0
  3    5    1    1        0.0
  5    7    1    1        0.0
  7    9    1    1        0.0
  9   11    1    1        0.0
 11   13    1    1        0.0
 13   15    1    1        0.0
 15   17    1    1        0.0
 17   19    1    1        0.0
 19   21    1    1        0.0
 21   25    3    1        0.0
 25   29    3    1        0.0
 29   37    3    2        0.0
 37   41    1    2        0.0
 30   38    3    2        0.0
 38   42    1    2        0.0
  1   37       0.35
 44   43   41   39   37   35   33   31   29   28
 27   26   25   24   23   22   21   20   19   18
 17   16   15   14   13   12   11   10    9    8
  7    6    5    4    3    2    1
  2    7       0.35
 42   40   38   36   34   32   30
100    8
  1     2.30      1.99     37.50   30000.0     6.92     99.5     68.5 0.10
  2    2.475     2.125     18.75   30000.0    7.405   106.25    73.75 0.10
  3     2.84      2.40     18.75   30000.0    8.375    120.0     84.0 0.10
  4    3.205      2.68     18.75   30000.0     9.35    134.0     94.0 0.10
  5    3.575      2.96     18.75   30000.0   10.325    148.0   104.25 0.10
  6     7.52      6.20     9.375   30000.0    21.62    310.0    219.0 0.10
  7     9.58      4.79     9.375   30000.0     1.83      1.0     1.56 0.10 TS 4x4x5/16 Backup Rail (Zero Strength)
  8     9.58      4.79      6.25   30000.0     1.83      1.0     1.56 0.10 TS 4x4x5/16 Backup Rail (Zero Strength)
300   10
  1    21.65       0.0    1000.0    1000.0    250.0    1000.0   1000.0 0.10 Simulated Upstream Anchor
   200.0     200.0       2.0       2.0
  2    21.65       0.0      1.15      2.46     54.0     96.6   255.57 0.10 W6x9 Steel Post
    6.0      15.0      16.0      16.0
  3    21.65       0.0      8.00      8.00     97.5    256.5   495.78 0.10 W6x15 Steel Post
   15.0      30.0      16.0      16.0
  4    21.65       0.0      8.00      8.00    105.0    256.5   580.87 0.10 W6x15 Steel Post
   15.0      30.0      16.0      16.0
  5    21.65       0.0      8.00      8.00    105.0    256.5   539.52 0.10 W6x15 Steel Post
   15.0      30.0      16.0      16.0
  6    21.65       0.0      8.00      8.00    212.5   462.24   984.21 0.10 W6x25 Steel Post
   20.0      55.0      16.0      16.0
  7    21.65     21.00      8.00      8.00    212.5   462.24   984.21 0.10 W6x25 Steel Post
   20.0      55.0      16.0      16.0
  8    21.65       0.0     196.0     196.0    100.0    520.0   626.77 0.10 Simulated Midspan Post
   35.0      35.0      10.0      10.0
  9    21.00       0.0    2000.0    2000.0    500.0   2500.0   2500.0 0.10 Simulated Downstream Anchor
   400.0     400.0       1.0       1.0
 10    21.65       0.0    2000.0    2000.0    500.0   2500.0   2500.0 0.10 Simulated Downstream Anchor
   400.0     400.0       1.0       1.0
  1    1    2   16    1  101       0.0       0.0       0.0
 17   17   18         1  102       0.0       0.0       0.0
 18   18   19         1  103       0.0       0.0       0.0
 19   19   20         1  104       0.0       0.0       0.0
 20   20   21         1  105       0.0       0.0       0.0
 21   21   22   28    1  106       0.0       0.0       0.0
 29   29   31   32    2  106       0.0       0.0       0.0
 33   37   39   34    2  106       0.0       0.0       0.0
 35   41   43             106       0.0       0.0       0.0
 36   43   44             106       0.0       0.0       0.0
```

```
37   30   32   40    2  107       0.0       0.0       0.0
41   38   40   42    2  108       0.0       0.0       0.0
43    1        44    2  301       0.0       0.0       0.0       0.0       0.0
45    5        49    2  302       0.0       0.0       0.0       0.0       0.0
50   15        51    2  303       0.0       0.0       0.0       0.0       0.0
52   19                 304       0.0       0.0       0.0       0.0       0.0
53   21                 305       0.0       0.0       0.0       0.0       0.0
54   25                 306       0.0       0.0       0.0       0.0       0.0
55   29   30            307       0.0       0.0       0.0       0.0       0.0
56   37                 308       0.0       0.0       0.0       0.0       0.0
57   42                 309       0.0       0.0       0.0       0.0       0.0
58   44                 310       0.0       0.0       0.0       0.0       0.0
 4400.0   40000.0   20    6    4    0    1
 1     0.055      0.12      6.00      17.0
 2     0.057      0.15      7.00      18.0
 3     0.062      0.18     10.00      12.0
 4     0.110      0.35     12.00       6.0
 5      0.35      0.45      6.00       5.0
 6      1.45      1.50     15.00       1.0
 1    100.75    15.875    1      12.0    1    0    0    0
 2    100.75    27.875    1      12.0    1    0    0    0
 3    100.75    39.875    2      12.0    1    0    0    0
 4     88.75    39.875    2      12.0    1    0    0    0
 5     76.75    39.875    2      12.0    1    0    0    0
 6     64.75    39.875    2      12.0    1    0    0    0
 7     52.75    39.875    2      12.0    1    0    0    0
 8     40.75    39.875    2      12.0    1    0    0    0
 9     28.75    39.875    2      12.0    1    0    0    0
10     16.75    39.875    2      12.0    1    0    0    0
11    -13.25    39.875    3      12.0    1    0    0    0
12    -33.25    39.875    3      12.0    1    0    0    0
13    -53.25    39.875    3      12.0    1    0    0    0
14    -73.25    39.875    3      12.0    1    0    0    0
15    -93.25    39.875    3      12.0    1    0    0    0
16   -113.25    39.875    4      12.0    1    0    0    0
17   -113.25   -39.875    4      12.0    0    0    0    0
18    100.75   -39.875    1      12.0    0    0    0    0
19     69.25     37.75    5       1.0    1    0    0    0
20    -62.75     37.75    6       1.0    1    0    0    0
 1     69.25     32.75      0.0      608.
 2     69.25    -32.75      0.0      608.
 3    -62.75     32.75      0.0      492.
 4    -62.75    -32.75      0.0      492.
 1       0.0       0.0
 3   731.250       0.0     25.0     62.14       0.0       0.0       1.0
```

APPENDIX F

COMPUTER SIMULATION RESULTS - NESTED THRIE BEAM TRANSITION

Table F-1. Computer Simulation Test Matrix and Results for Nested Thrie Beam Transition with Backup Tube Rail

Test No.	Impact Node	Impact Distance[1] (in.)	Maximum Thrie Beam Dynamic Deflection (in.)	Maximum Thrie Beam Permanent Set Deflection (in.)	Maximum Thrie Beam Tension (kips)	Wheel Snag Potential On Concrete End Section[2]		
						δ (in.) Steel Rim Lateral Distance	δ (in.) Rubber Tire Lateral Distance	Snag (Y/N)
NEBT2RUN6B2	25	87.50	6.23	5.31	99.42	4.25	5.05	N
NEBT2RUN5B2	26	78.125	6.73	5.57	122.97	5.48	6.05	N
NEBT2RUN1B2	27	68.75	6.71	5.54	138.16	6.06	6.26	N
NEBT2RUN2B2	28	59.375	6.19	5.52	135.42	5.97	5.75	N
NEBT2RUN3B2	29	50.00	6.07	5.42	130.13	5.43	4.25	N
NEBT2RUN4B2	31	40.625	5.41	5.10	120.06	3.84	2.05	N

[1] - Longitudinal distance measured from impact location to upstream end of tapered concrete end section.
[2] - The upstream end of the tapered concrete end section is positioned approximately 8 in. away from the front face of the concrete buttress.