MN 96-08

Test Level 4 Evaluation of the Minnesota Combination Bridge Rail

by

Brian G. Pfeifer, P.E.
Research Associate Engineer

James C. Holloway
Research Associate Engineer

Ronald K. Faller, P.E.
Research Associate Engineer

Barry T. Rosson, Ph.D., P.E.
Assistant Professor

submitted to

Minnesota Department of Transportation
Transportation Building
395 John Ireland Boulevard
St. Paul, Minnesota 55155

TRANSPORTATION RESEARCH REPORT TRP-03-53-96

Midwest Roadside Safety Facility (MwRSF)
Center for Infrastructure Research
Civil Engineering Department
University of Nebraska-Lincoln
1901 Y Street, Building C
Lincoln, Nebraska 68588-0601

March 1996

Technical Report Documentation Page

1. Report No.	2.	3. Recipient's Accession No.
MN/RC - 96/08		

4. Title and Subtitle	5. Report Date
TEST LEVEL 4 EVALUATION OF THE MINNESOTA COMBINATION BRIDGE RAIL	March 1996
	6.

7. Author(s)	8. Performing Organization Report No.
B.G. Pfeifer, J.C. Holloway, R.K. Faller, and B.T. Rosson	TRP-03-53-96

9. Performing Organization Name and Address	10. Project/Task/Work Unit No.
Midwest Roadside Safety Facility (MwRSF) Civil Engineering Department University of Nebraska - Lincoln 1901 Y Street, Building C Lincoln, NE 68588-0601	
	11. Contract © or Grant (G) No. © (G)

12. Sponsoring Organization Name and Address	13. Type of Report and Period Covered
Minnesota Department of Transportation (In cooperation with the Midwest States Regional Pooled Fund Program) 395 John Ireland Boulevard St. Paul Minnesota, 55155	Final Report 1995
	14. Sponsoring Agency Code

15. Supplementary Notes

16. Abstract (Limit: 200 words)

A safety performance evaluation of the Minnesota concrete parapet with brush curb and metal rail (Minnesota Combination Bridge Rail) was conducted for the Minnesota Department of Transportation (Mn/DOT) as part of Year 4 of the Midwest States Regional Pooled Fund Program.

The safety performance evaluation of this bridge rail system was conducted and reported according to the criteria specified in Test Level 4 of the National Cooperative Highway Research Program (NCHRP) Report No. 350, *Recommended Procedures for the Safety Performance Evaluation of Highway Features.* This testing involved impacts with an 8000-kg single-unit truck, a 2000-kg pickup truck, and an 820- kg small car.

The bridge rail design was modified following the 2000-kg pickup truck test in order to reduce the potential for snagging. After this modification was made, and the system was retested, the safety performance of this system was found to be acceptable and meets the safety standards set forth in Test Level 4 of NCHRP 350.

17. Document Analysis/Descriptors		18. Availability Statement
Highway Safety Crash Tests Compliance Tests	Roadside Appurtenances Bridge Rails	No restrictions. Document available from: National Technical Information Services, Springfield, Virginia 22161

19. Security Class (this report)	20. Security Class (this page)	21. No. of Pages	22. Price
Unclassified	Unclassified	95	

DISCLAIMER STATEMENT

The contents of this report reflect the views of the authors who are responsible for the facts and the accuracy of the data presented herein. The contents do not necessarily reflect the official views or policies of the Minnesota Department of Transportation nor the Federal Highway Administration. This report does not constitute a standard, specification, or regulation.

ACKNOWLEDGEMENTS

The authors wish to acknowledge the Midwest States Regional Pooled Fund Program and the Center for Infrastructure Research for providing the funding for this research project. At the time this project was funded, the Midwest States Regional Pooled Fund Program consisted of the Nebraska Department of Roads, the Kansas Department of Transportation, the Missouri Highway and Transportation Department, the Minnesota Department of Transportation, and the Iowa Department of Transportation.

A special thanks is given to the following individuals who made a contribution to the completion of this research project.

Center for Infrastructure Research

Maher Tadros, Ph.D., P.E., Director
Samy Elias, Ph.D., P.E., Associate Dean for Engineering Research Centers

Minnesota Department of Transportation

Khani Sahebjam, P.E., State Aid Bridge Engineer
Dan Dorgan, P.E., Bridge Planning and Program Engineer
Terry Beaudry, P.E., Operations Contracts Engineer for the office of Minnesota Road Research
Ron Cassellius, Research Program Coordinator

Nebraska Department of Roads

Leona Kolbet, Research Coordinator

Missouri Department of Transportation

Pat McDaniel, P.E., Design Special Assignments Engineer

Kansas Department of Transportation

Ron Seitz, P.E., Road Design Squad Leader

Iowa Department of Transportation

David Little, P.E., Design Methods Engineer

Federal Highway Administration

Milo Cress, P.E., Nebraska Division Office

Midwest Roadside Safety Facility

D. L. Sicking, Ph.D., P.E., Director
K. L. Krenk, Field Operations Manager
Undergraduate and Graduate Assistants

TABLE OF CONTENTS

Page

DISCLAIMER STATEMENT I

ACKNOWLEDGEMENTS ii

1 INTRODUCTION 1
1.1 Problem Statement 1
1.2 Objective 1
1.3 Scope 1

2 DESIGN DETAILS 2
2.1 Design No. 1 2
2.2 Design No. 2 11
2.3 Design No. 3 11

3 TEST CONDITIONS 16
3.1 Test Facility 16
3.1.1 Test Site 16
3.1.2 Vehicle Guidance System 16
3.2 Test Vehicles 16
3.3 Data Acquisition Systems 17
3.3.1 Accelerometers 17
3.3.2 Rate Transducer 18
3.3.3 High Speed Photography 18
3.3.4 Speed Trap Switches 19

4 PERFORMANCE EVALUATION CRITERIA 20

5 TEST RESULTS 23
5.1 Test MN-1 (8000S, 80 km/h, 15 degrees) 23
5.2 Test MN-2 (2000P, 100 km/h, 25 deg) 34
5.3 Test MN-3 (2000P, 100 km/h, 25 deg) 43
5.4 Test MN-4 (820C, 100 km/h, 20 deg) 50

6 DISCUSSION 57

7 RECOMMENDATIONS 58

8 CONCLUSIONS 59

9 REFERENCES 60

Page

10 APPENDICES 61
APPENDIX A.
Test Vehicle Information 62
APPENDIX B.
Accelerometer Data Analysis - Test MN-1 82
APPENDIX C.
Accelerometer Data Analysis - Test MN-2 83
APPENDIX D.
Accelerometer Data Analysis - Test MN-3 82
APPENDIX E.
Accelerometer Data Analysis - Test MN-4 82

LIST OF FIGURES

Page
Figure 1. Minnesota Combination Bridge Rail Design Details, Design No. 1. 5
Figure 2. Minnesota Combination Bridge Rail weld details, Design No. 1. 6
Figure 3. Elevation of the Minnesota Combination Bridge Rail. 7
Figure 4. Reinforcement layout for bridge deck and parapet. 8
Figure 5. The Minnesota Combination Bridge Rail. 9
Figure 6. Simulated concrete bridge deck anchorage system. 10
Figure 7. Minnesota Combination Bridge Rail Design Details, Design No. 2. 13
Figure 8. Minnesota Combination Bridge Rail Final Design Details (Design No. 3). 14
Figure 9. Minnesota Combination Bridge Rail Details, Design No. 3. 15
Figure 10. Summary of Test MN-1. 26
Figure 11. Downstream sequential photographs, Test MN-1. 27
Figure 12. Full-Scale Vehicle Crash Test MN-1. 28
Figure 13. Full-Scale Vehicle Crash Test MN-1 (continued). 30
Figure 14. Vehicle Trajectory, Test MN-1. 31
Figure 15. Bridge Rail Damage, Test MN-1. 32
Figure 16. Test Vehicle Damage, Test MN-1. 33
Figure 17. Summary of Test MN-2. 37
Figure 18. Downstream sequential photographs, Test MN-2. 38
Figure 19. Full-scale Vehicle Crash Test MN-2. 39
Figure 20. Full-scale Vehicle Crash Test MN-2. 40
Figure 21. Bridge Rail Damage, Test MN-2. 41
Figure 22. Vehicle Damage, Test MN-2. 42
Figure 23. Retrofit of Minnesota Combination Bridge Rail for tests MN-3 and MN-4. 45
Figure 24. Summary of Test MN-3. 46
Figure 25. Downstream sequential photographs, Test MN-3. 47
Figure 26. Bridge Rail Damage, Test MN-3. 48
Figure 27. Vehicle Damage, Test MN-3. 49
Figure 28. Summary of Test MN-4. 51
Figure 29. Downstream sequential photographs, Test MN-4. 52
Figure 30. Bridge Rail Damage, Test MN-4. 54
Figure 31. Vehicle Damage, Test MN-4. 55

LIST OF TABLES

Page
Table 1. Test Vehicle Summary 17
Table 2. NCHRP 350 Test Level 4 Crash Test Conditions 21
Table 3. Relevant NCHRP 350 Evaluation Criteria 22
Table 4. Performance Evaluation Results 56

1 INTRODUCTION

1.1 Problem Statement

A concrete parapet with brush curb and metal rail was constructed by the Minnesota Department of Transportation (Mn/DOT) on the Lake Street Bridge in Minneapolis. As a result of favorable field performance and pleasing aesthetics, Mn/DOT wished to evaluate the feasibility of using this combination rail on higher service level roadways. Consequently, this research project was undertaken to evaluate the current design according to Test Level 4 as described in the National Cooperative Highway Research Program (NCHRP) Report No. 350, *Recommended Procedures for the Safety Performance Evaluation of Highway Features* (1). Researchers at the Midwest Roadside Safety Facility were to evaluate the performance of the bridge rail after each of the full-scale crash tests and recommend any design changes which would enhance the safety of the bridge rail.

1.2 Objective

The objective of this research project was to evaluate the Minnesota Combination Bridge Rail by full-scale crash testing according to Test Level 4 of NCHRP Report 350 (1). Prior to the crash testing, MwRSF engineers were to perform a structural analysis of the system, and recommend necessary design changes and incorporate them in the construction of the railing with the approval of Mn/DOT.

1.3 Scope

The scope of this project included a structural analysis to evaluate the integrity of the Minnesota Combination Bridge Rail, as well as the evaluation of the system according to the crash test criteria specified in Test Level 4 of NCHRP 350 (1). This evaluation included impacting the rail with an 8000-kg straight truck at 80 km/h and 15 degrees, a 2000-kg pickup at 100 km/h and 25

degrees, and an 820-kg small car at 100 km/h and 20 degrees.

2 DESIGN DETAILS

Throughout the evaluation of the Minnesota Combination Bridge Rail, a number of design changes were made to improve its safety performance, as well as to accommodate the design for the availability of the required structural steel. In order to follow the design changes more easily, the three designs referred to throughout this report are described below. The reasons for some of the changes are further discussed in Section 5.2.

2.1 Design No. 1

The structural integrity of the original combination bridge rail used by Mn/DOT on low service level roadways was evaluated and it was determined that, with only a few modifications, the design was adequate to withstand forces imparted into it during Test Level 4 vehicular impacts. These modifications included increasing the size of the weld at the base of the post to a three pass ⅜ in. fillet weld, and revising the method for embedding the anchor bolts in the concrete parapet. The material specification for the anchor bolts was also changed from ASTM A307 to ASTM A325. However, due to the unavailability of this type and size of bolt, it was decided to build the installation with ASTM A193 grade B7 threaded rod. This material has strength properties similar to ASTM A325, is readily available, and the continuous threads aid in the attachment of the fixture embedded in the concrete.

Detailed drawings of the Minnesota Combination Bridge Rail as it was installed for tests MN-1 and MN-2 are shown in Figures 1 and 2. The overall layout of the tested system is shown in Figure 3. Photographs taken during the construction of the deck and concrete parapet are shown in

Figure 4, and photographs of the completed installation are shown in Figure 5.

The total length of the installation was 116 ft (35.4 m). This installation consisted of four major structural components: (1) simulated concrete bridge deck; (2) 6 in. (152 mm) high concrete curb; (3) 20 in. (508 mm) high concrete parapet; and (4) a TS 6 x 3 x ¼ in. (structural tube) steel rail mounted on 10¼ in. (260 mm) high TS 6 x 6 x ¼ in. steel posts. The simulated concrete bridge deck was anchored to the existing concrete apron as shown in Figure 6.

The concrete specified for use in the bridge deck parapet required a minimum 28-day compressive strength of 4,300 psi (29.7 MPa). The 35-day concrete compressive strength for the simulated bridge deck was approximately 4,580 psi (31.6 MPa), and the 7-day concrete compressive strength for the parapet was approximately 4,300 psi (29.7 MPa).

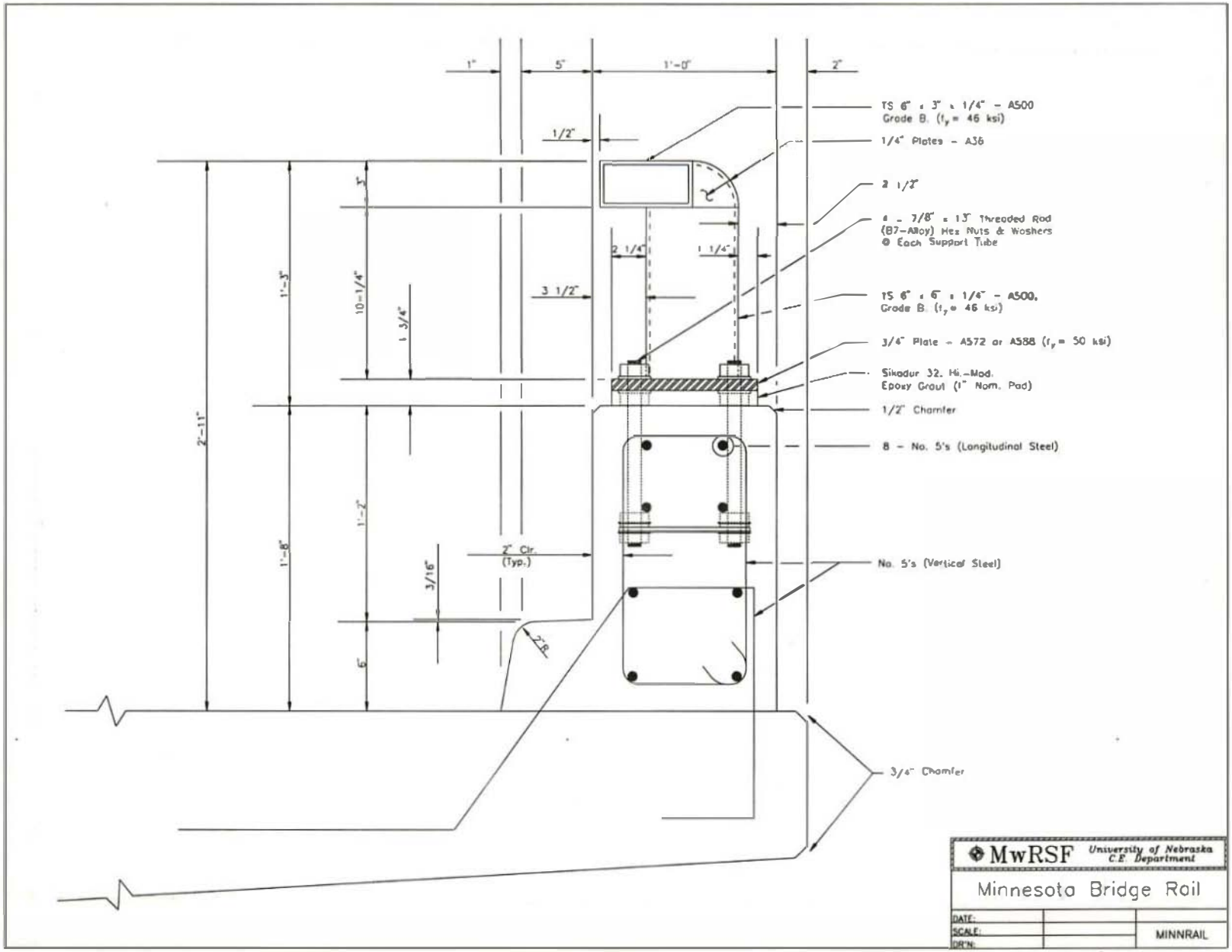

Figure 1. Minnesota Combination Bridge Rail Design Details, Design No. 1.

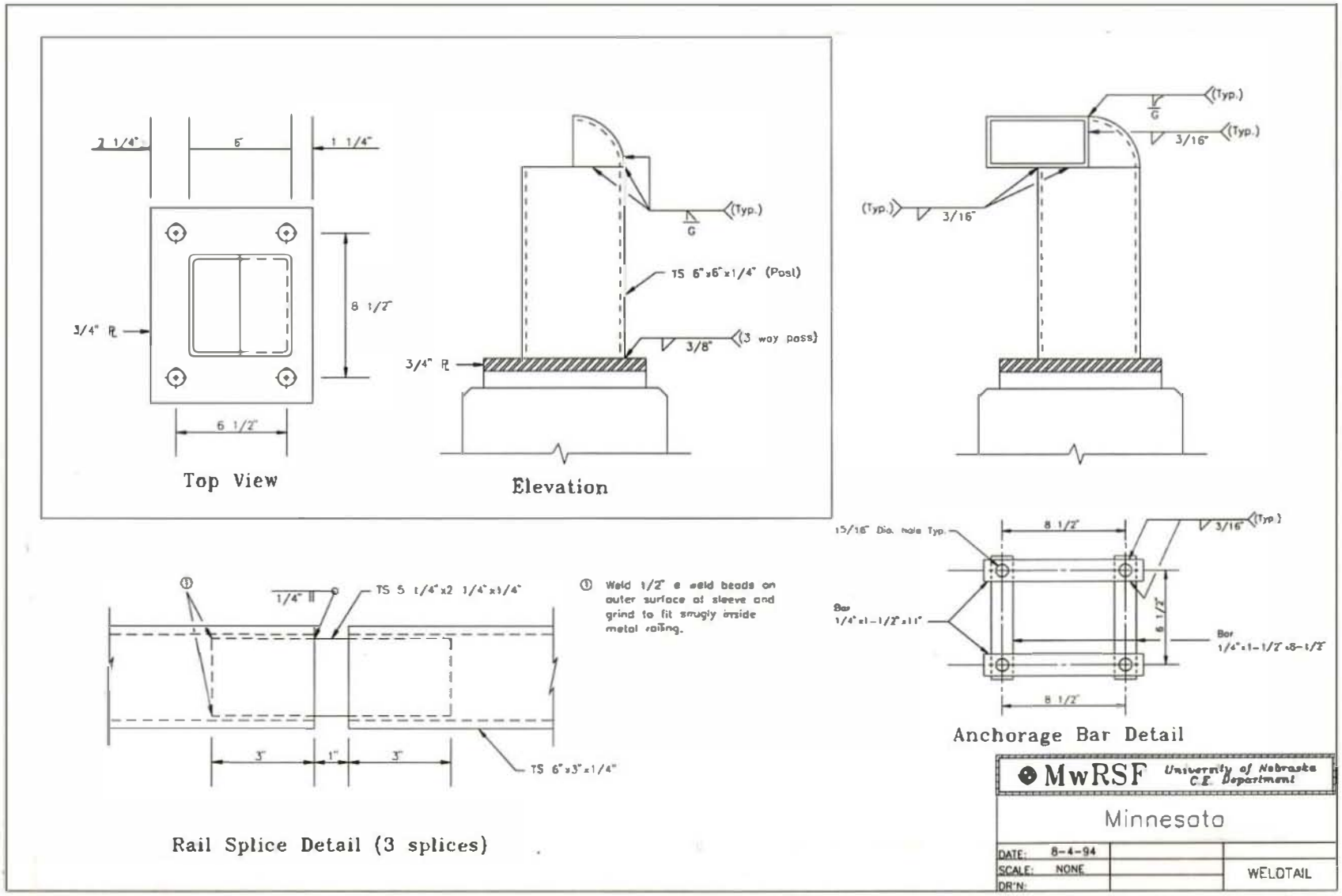

Figure 2. Minnesota Combination Bridge Rail weld details, Design No. 1.

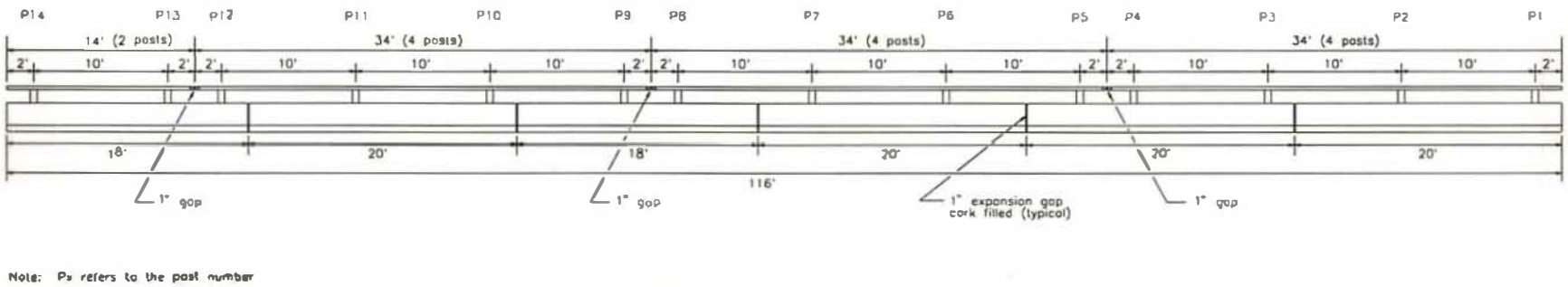

Figure 3. Elevation of the Minnesota Combination Bridge Rail.

Figure 4. Reinforcement layout for bridge deck and parapet.

Figure 5. The Minnesota Combination Bridge Rail.

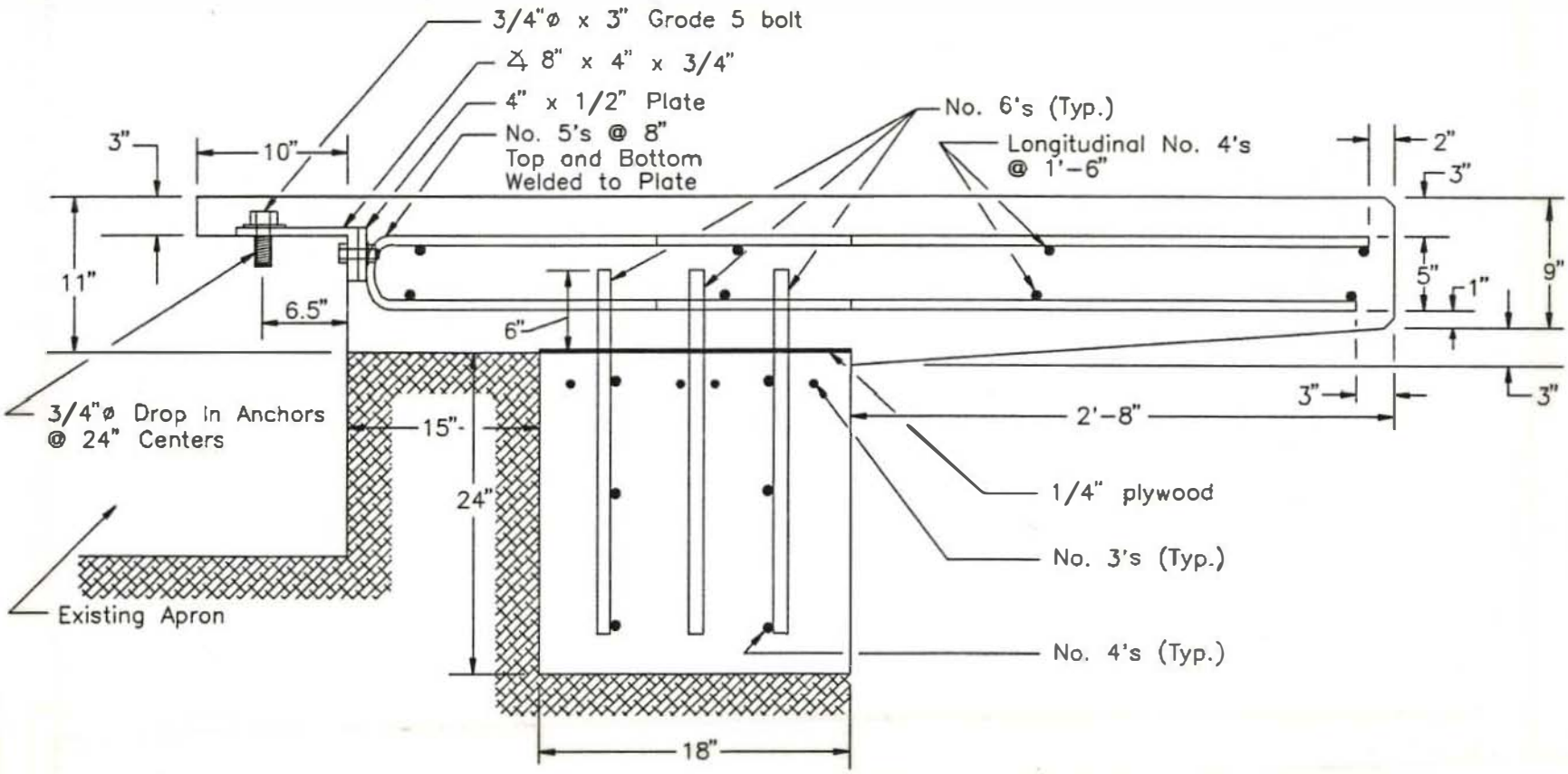

Figure 6. Simulated concrete bridge deck anchorage system.

2.2 Design No. 2

Results from the second full-scale vehicle crash test indicated that it was necessary to modify Design No. 1 in order to reduce the degree of snagging which was occurring on the posts supporting the steel rail. Based on the analysis of the high-speed film and gouge marks resulting from Test MN-2, it was determined that extending both the tubular rail and concrete parapet 4 in. (102 mm) toward the roadway would considerably reduce the snagging potential. This would also reduce the effective width of the exposed curb, thereby virtually eliminating any tendencies for the vehicle tire to climb up the curb.

These modifications were made as a retrofit to the existing system as shown in Figure 7. Reinforcing steel was doweled and epoxied into the existing concrete parapet and connected to steel mesh (Type 66 66) in order to extend it 4 in. (102 mm) toward the roadway. This left enough of the brush curb exposed that it could still serve the intended purpose of preventing snowplow blades from contacting the parapet during snow removal operations.

The rail was extended by welding a TS 4 x 3 x ¼ in. steel tube to the existing TS 6 x 3 x ¼ in. railing. Upon successful completion of the crash testing of this version of the system, it was planned to specify a TS 10 x 3 x ¼ in. rail in the final design.

2.3 Design No. 3

After completion of this crash test program, and as the final design was being implemented by Mn/DOT, it was determined that the TS 10 x 3 x ¼ in. rail was not readily available from steel suppliers. Therefore, at the request of Mn/DOT, the final design was evaluated and modified to utilize a readily available TS 10 x 4 x ¼ in. rail on TS 7 x 5 x 5/16 in. posts as shown in Figures 8 and 9. During this design revision, the critical clearance between the front face of the rail and posts

was maintained, as this dimension has the potential for greatly affecting the degree of snagging on the posts. An analysis of this alternate design showed that its strength was greater than that of Design No. 2, with basically the same geometry. Therefore, it is the judgement of the authors that these changes will not affect the results obtained from the testing of Design No. 2 of the Minnesota Combination Bridge Rail.

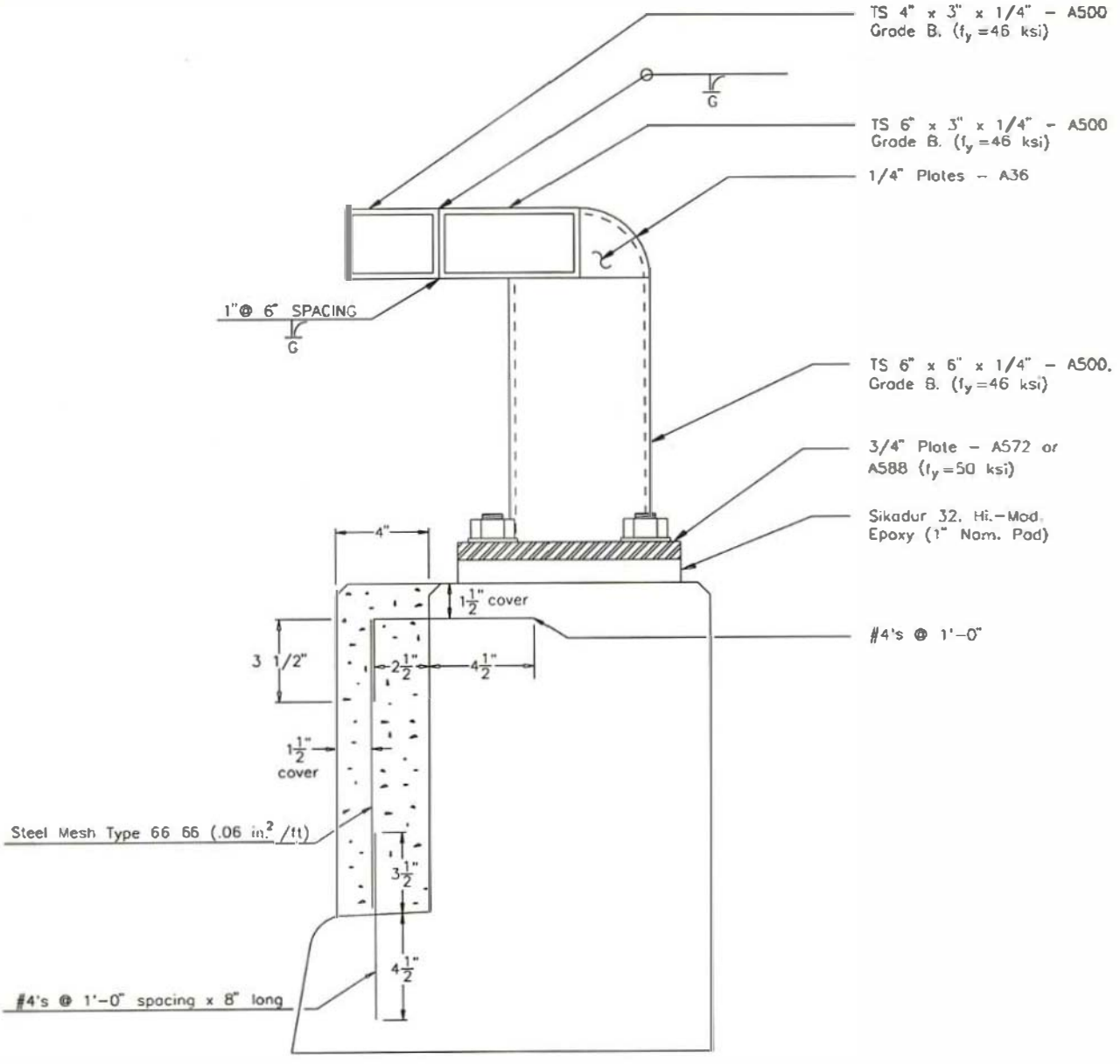

Figure 7. Minnesota Combination Bridge Rail Design Details, Design No. 2.

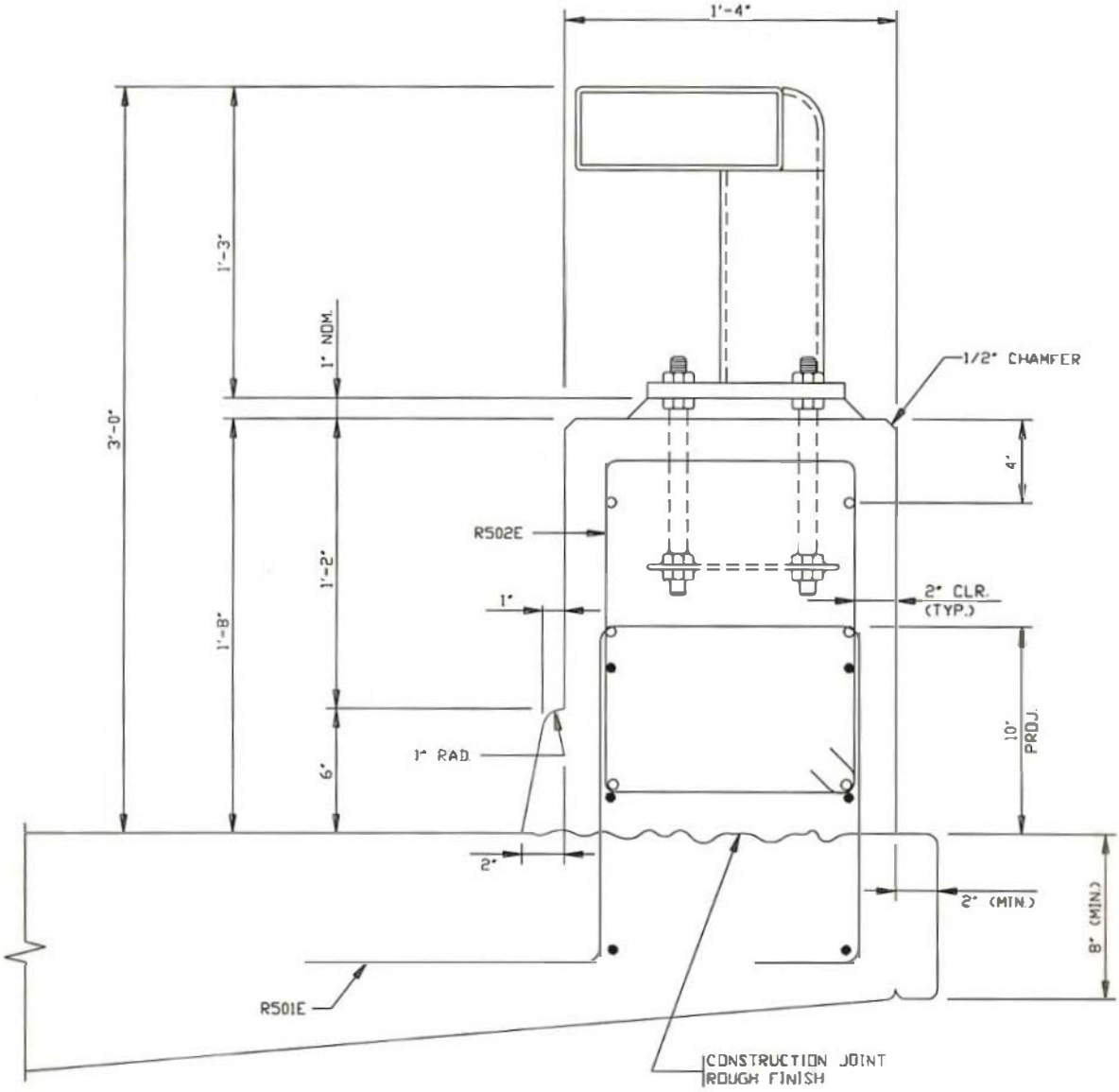

Figure 8. Minnesota Combination Bridge Rail Final Design Details (Design No. 3).

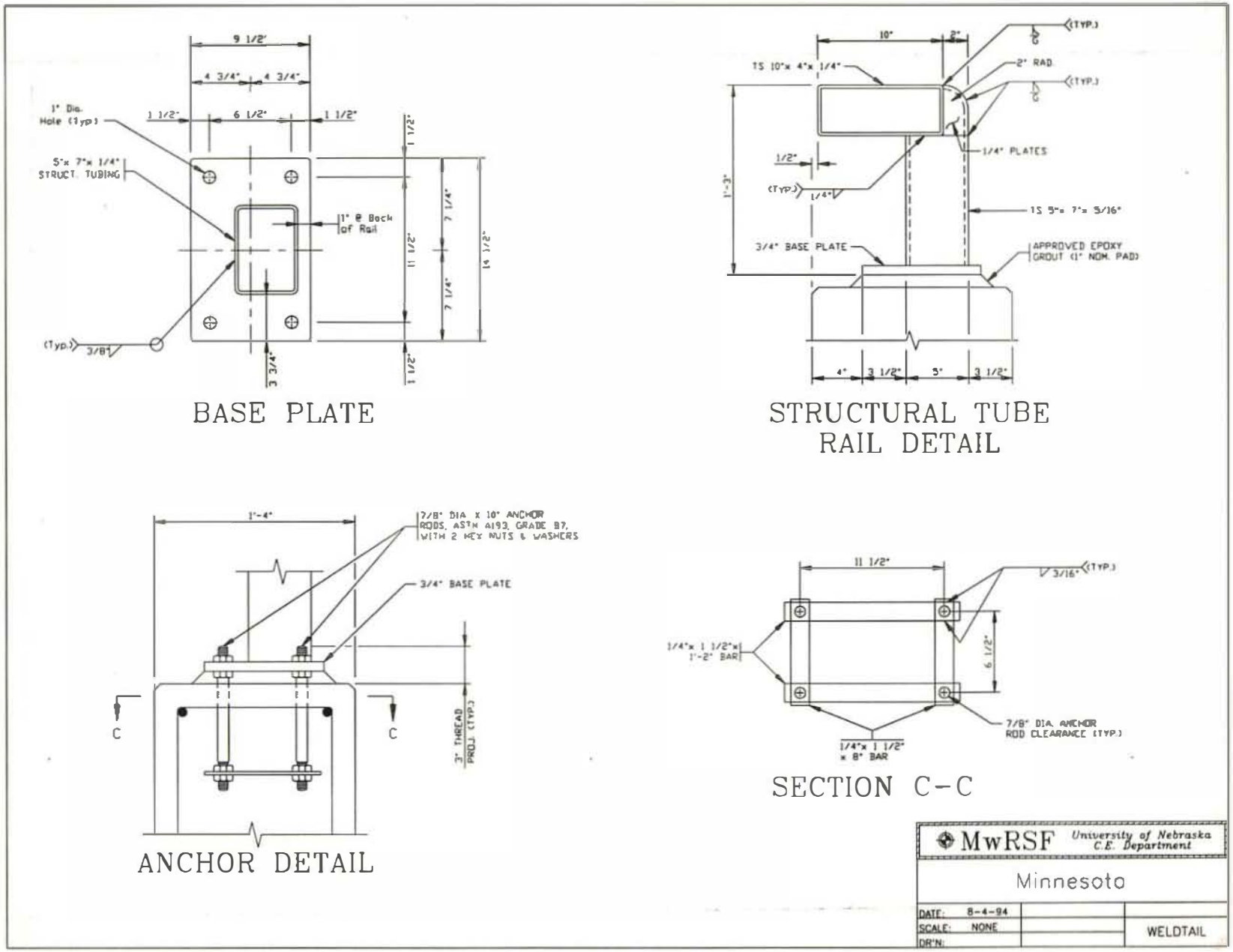

Figure 9. Minnesota Combination Bridge Rail Details, Design No. 3.

3 TEST CONDITIONS

3.1 Test Facility

3.1.1 Test Site

The Midwest Roadside Safety Facility's outdoor test site is located at the Lincoln Air-Park on the northwest end of the Lincoln Municipal Airport. The test facility is approximately 5 miles (8 km) northwest of the University of Nebraska-Lincoln. The site is surrounded and protected by an 8-ft (2.4 m) high chain-link security fence.

3.1.2 Vehicle Guidance System

A reverse cable tow system with a 1:2 mechanical advantage was used to propel the test vehicle. The distance traveled and the speed of the tow vehicle are one-half that of the test vehicle. The test vehicle was released from the tow cable before impact with the appurtenance. A fifth wheel, built by the Nucleus Corporation, was used in conjunction with a digital speedometer to increase the accuracy of the test vehicle impact speed.

A vehicle guidance system developed by Hinch (2) was used to steer the test vehicle. The guide-flag, attached to the front-left wheel and the guide cable, was sheared off before impact. The 3/8-in. (95 mm) diameter guide cable was tensioned to approximately 3,000 lbs (13.3 kN), and supported laterally and vertically every 100 ft (30.5 m) by hinged stanchions. The vehicle guidance system was 2,000 ft (610 m) long for the first test, and 1,500 ft (460 m) long for all subsequent tests.

3.2 Test Vehicles

A summary of the test vehicles used in this project is presented in Table 1. Photographs and dimensions of all test vehicles are presented in Appendix A.

Table 1. Test Vehicle Summary

Test No.	Vehicle	Test Inertial Weight	
		(lbs)	(kg)
MN-1	1987 Ford F600 Single Unit Truck	18,000	8,172
MN-2	1986 Ford F250 Pickup	4,420	2,007
MN-3	1986 Ford F250 Pickup	4,442	2,017
MN-4	1988 Ford Festiva	1,800	817

A number of square, black and white-checkered targets were placed on each test vehicle. These targets were used in the high-speed film analysis. Two targets were located on the center of gravity, one on the top and one on the driver's side of the test vehicle. The remaining targets were strategically located such that they could be used in the film analysis of the tests.

The front wheels of the test vehicle were aligned for camber, caster, and toe-in values of zero so that the vehicle would track properly along the guide cable. Two 5B flash bulbs were mounted on the roof of the vehicle to pinpoint the time of impact with the bridge rail on the high-speed film. The flash bulbs were fired by a pressure tape switch mounted on the front face of the bumper.

3.3 Data Acquisition Systems

3.3.1 Accelerometers

A triaxial piezoresistive accelerometer system with a range of ±200 G's was used to measure the acceleration in the longitudinal, lateral, and vertical directions at a sample rate of 3,200 Hz. The environmental shock and vibration sensor/recorder system, Model EDR-3, was configured with 256 Kb of RAM and a 1,120 Hz filter. Computer software, "DynaMax 1 (DM-1)" and "DADiSP" were used to digitize, analyze, and plot the accelerometer data.

This system was used in conjunction with a backup system, which consisted of two triaxial piezoresistive accelerometer systems with a range of ±200 g's (Endevco Model 7264). The accelerometers were rigidly attached to an aluminum block mounted near the vehicle's center of gravity. Accelerometer signals were received and conditioned by an onboard Series 300 Multiplexed FM Data System built by Metraplex Corporation. The multiplexed signal was then transmitted to a Honeywell 101 Analog Tape Recorder. In the event of a failure in the EDR-3 system, computer software "EGAA" and "DADiSP" would be used to digitize, analyze, and plot the accelerometer data.

3.3.2 Rate Transducer

A Humphrey 3-axis rate transducer with a range of 250 deg/sec in each of the three directions (pitch, roll, and yaw) was used to measure the rotational rates of the test vehicle. This data is not required by the current criteria, but is used to provide engineers with a better understanding of the dynamics of vehicle impacts with barriers. This information is also useful in verifying computer simulation results.

3.3.3 High Speed Photography

Six high-speed 16-mm cameras operating at 500 frames/sec were used to film each crash test. A Red Lake Locam with a 12.5-mm lens was placed above the test installation to provide a field of view perpendicular to the ground. A Photec IV, with an 80-mm lens, as well as a Locam with a 76 mm lens, was placed downstream from the impact point and had a field of view parallel to the barrier. A second Photec IV, with a 55-mm lens, was placed on the traffic side of the bridge rail and had a field of view perpendicular to the barrier. Two additional high speed Locam cameras were placed behind the rail to aid in evaluation of the vehicle/rail interaction. A white-colored 5-ft by

5-ft (1.52-m by 1.52-m) grid was painted on the concrete in front of the rail near the impact point. This grid was in the view of the overhead camera, and provided a visible reference system to use in the analysis of the overhead high-speed film. The film was analyzed using a Vanguard Motion Analyzer. Actual camera speed and camera divergence factors were considered in the analysis of the high-speed film.

3.3.4 Speed Trap Switches

Seven pressure tape switches, spaced at 5-ft (1.52-m) intervals, were used to determine the speed of the vehicle before impact. Each tape switch fired a strobe light and sent an electronic timing mark to the data acquisition system as the left-front tire of the test vehicle passed over it. Test vehicle speeds were determined from electronic timing mark data recorded on "EGAA" software. Strobe lights and high-speed film analysis are used only as a backup in the event that vehicle speeds cannot be determined from the electronic data.

4 PERFORMANCE EVALUATION CRITERIA

The safety performance objective of a bridge rail is to reduce injury to and eliminate deaths of occupants of errant vehicles and to protect lives and property on, adjacent to, or below a bridge (3). In order to prevent or reduce the severity of such accidents, special attention should be given to four major design factors. These factors are: (1) strength of the railing to resist impact forces; (2) effective railing height; (3) shape of the face of the railing; and (4) deflection characteristics of the railing (4).

The performance criteria used to evaluate these four full-scale vehicle crash tests were taken from NCHRP Report 350, *Recommended Procedures for the Safety Performance Evaluation of Highway Features* (1). The test conditions for the required test matrix are shown in Table 2. The specific evaluation criteria are shown in Table 3.

The safety performance of the bridge rail was evaluated according to three major factors: (1) structural adequacy, (2) occupant risk, and (3) vehicle trajectory after collision. These three evaluation criteria are defined and explained in NCHRP Report 350 (1). After each test, vehicle damage was assessed by the traffic accident scale (TAD) (5) and the vehicle damage index (VDI) (6).

Table 2. NCHRP 350 Test Level 4 Crash Test Conditions

Test Designation	Test Vehicle	Impact Conditions		Evaluation Criteria[1]
		Speed (km/h)	Angle (deg)	
4-10	820C	100	20	A,D,F,H,I,(J),K,M
4-11	2000P	100	25	A,D,F,K,L,M
4-12	8000S	80	15	A,D,G,K,M

[1] Evaluation criteria explained in Table 3, criteria in parenthesis are optional.

Table 3. Relevant NCHRP 350 Evaluation Criteria

A.	Test article should contain and redirect the vehicle; the vehicle should not penetrate, underride, or override the installation although controlled lateral deflection of the test article is acceptable.
D.	Detached elements, fragments or other debris from the test article should not penetrate or show potential for penetrating the occupant compartment, or present an undue hazard to other traffic, pedestrians, or personnel in a work zone. Deformations of, or intrusions into, the occupant compartment that could cause serious injuries should not be permitted.
F.	The vehicle should remain upright during and after collision although moderate roll, pitching and yawing are acceptable.
G.	It is preferable, although not essential, that the vehicle remain upright during and after collision.
H.	Longitudinal and lateral occupant impact velocities should fall below the preferred value of 9 m/s (29.5 fps), or at least below the maximum allowable value of 12 m/s (39.4 fps).
I.	Longitudinal and lateral occupant ridedown accelerations should fall below the preferred value of 15 g's, or at least below the maximum allowable value of 20 g's.
J.	(Optional) Hybrid III dummy. Response should conform to evaluation criteria of Part 571.208, Title 49 of Code of Federal Regulation, Chapter V.
K.	After collision it is preferable that the vehicle's trajectory not intrude into adjacent traffic lanes.
L.	The occupant impact velocity in the longitudinal direction should not exceed 12 m/s (39.4 fps) and the occupant ridedown acceleration in the longitudinal direction should not exceed 20 g's.
M.	The exit angle from the test article preferably should be less than 60 percent of test impact angle, measured at time of vehicle loss of contact with test device.

5 TEST RESULTS

5.1 Test MN-1 (8000S, 80 km/h, 15 degrees)

The relatively high center of gravity of the single-unit truck increases the possibility of it rolling over the top of the rail, producing a potentially dangerous situation for both the driver of the vehicle and any traffic passing under the bridge. This test was therefore considered to be the most critical evaluation in the Test Level 4 series, and was conducted first.

A 1987 Ford F600 single-unit truck was directed into the Minnesota Combination Bridge Rail at 50.8 mph (81.7 km/h) and 16.2 degrees. The impact point, as determined from criteria in NCHRP Report 350 (1), was located 5 ft (1.52 m) upstream of the first splice in the tubular rail. This impact location, a summary of the test results, and sequential photographs are shown in Figure 10. Additional sequential photographs are presented in Figures 11 through 13.

Upon impact with the bridge rail, the right-front corner of the truck began to crush inward. Approximately 30 ms after impact, the right-front tire of the vehicle mounted the curb and was situated on top of it. The maximum crush of the right-front corner occurred by 169 ms. The left-front tire lost contact with the ground 239 ms after impact, and the left-rear tire became airborne shortly thereafter, at 379 ms. The cab of the truck reached a maximum roll angle of approximately 19 degrees at 598 ms and the box reached a maximum roll angle of approximately 23 degrees 748 ms after impact. The left-rear tire returned to the ground 1.156 sec after impact, and the left-front tire touched down at 1.286 sec. The vehicle continued to roll in a counterclockwise direction and the right-front tire lost contact with the concrete apron 1.695 sec after impact, and then regained contact with the ground at approximately 1.854 sec. The vehicle continued to travel downstream, coming to rest in an upright position as shown in Figure 14. The

final resting position of the vehicle was such that the right-front tire was located 206.5 ft (62.9 m) downstream of impact, and offset 5 in. (13 cm) toward the roadway from a line parallel with the front face of the rail.

Damage to the bridge rail included tire marks, as well as concrete gouging and spalling along the length of the concrete curb and parapet. Damage to the steel rail and posts included scrapes and gouges along the rail and posts, as well as a maximum permanent set deformation of 5/16 in. (8 mm) in the lateral direction, and ½ in. (13 mm) downward. This damage is shown in Figure 15.

Damage to the test vehicle was minimal considering the impact conditions, as can be seen in Figure 16. There was very little damage to the van box, and all of the glass in the truck remained intact. There was no occupant compartment damage, and no visible damage to the truck on the drivers side. There was damage to the right-front fender and the right side of the front bumper. The front axle was pushed back and the frame was bent. There was considerable deformation of the right-rear wheel which resulted from contact with bridge rail. The gas tank (which had been purged and filled with water before the test) was punctured and deformed considerably.

The occupant risk values for this test were calculated even though NCHRP Report 350 (1) does not require that this test meet any of the criteria. The normalized occupant impact velocities were determined to be 10.8 fps (3.3 m/s) in the longitudinal direction, and the 11.7 fps (3.6 m/s) in the lateral direction. The highest 10-ms average occupant ridedown decelerations were 1.6 g's (longitudinal) and 3.2 g's (lateral). The results of this occupant risk assessment, as determined from the accelerometer data, are summarized in Figure 10 and Table 4. The accelerometer data

analysis is shown in Appendix B.

The performance of Test MN-1 on the Minnesota Combination Bridge Rail was determined to be satisfactory according to the criteria set forth in NCHRP Report 350 (1).

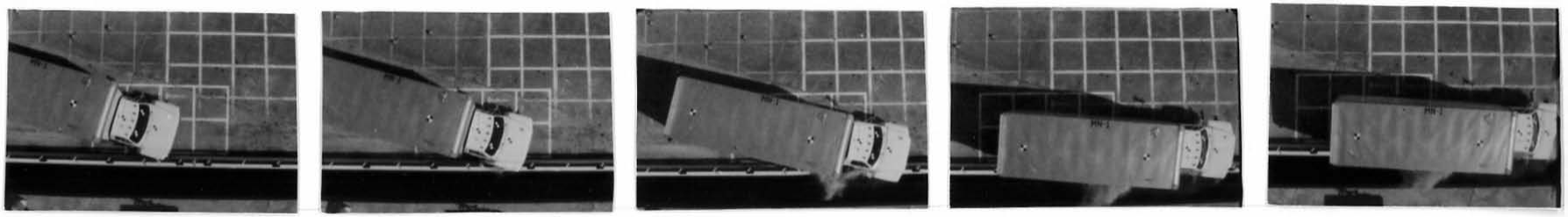

Impact | 59 ms | 178 ms | 337 ms | 366 ms

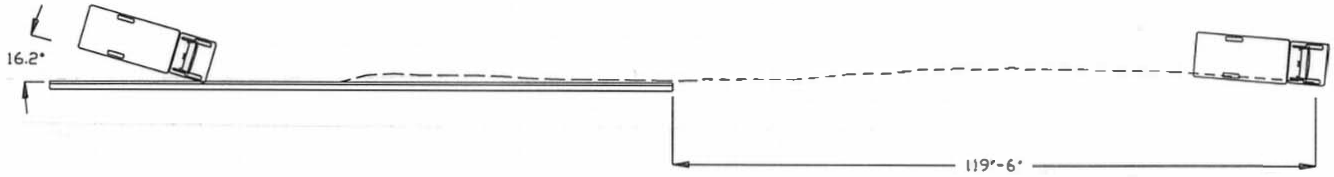

Test Number	MN-1
NCHRP 350 Test Designation	4-12
Date	10/4/94
Installation	Minnesota Combination Bridge Rail
System length	116 ft
Concrete curb	
Height	6 3/16 in.
Width	6 in.
Concrete parapet	
Height	20 in.
Width	12 in.
Steel Rail	TS 6 x 3 x ¼ in. - A500 Grade B
Steel Posts	TS 6 x 6 x ¼ in. - A500 Grade B
Vehicle Model	1987 Ford F600 single unit truck
Vehicle Weight	
Curb	11,330 lbs
Test Inertia	18,000 lbs
Gross Static	18,000 lbs

Speed	
Impact	50.8 mph
Exit	43.8 mph
Angle	
Impact	16.2 deg
Exit	1.0 deg
Change in Velocity	7.0 mph
Normalized Occupant Impact Velocity	
Longitudinal	10.8 fps
Lateral	11.7 fps
Occupant Ridedown Deceleration	
Longitudinal	1.6 g's
Lateral	3.2 g's
Vehicle Damage	
TAD	1-RFQ-5
VDI	01RFES2
Vehicle Rebound Distance	25.5 in. @ 130 ft
Bridge Rail Damage	Minor
Maximum Permanent Set Deflections	5/16 in. @ midspan of posts 7 & 8

Figure 10. Summary of Test MN-1.

Conversion Factors: 1 in.= 2.54 cm; 1 lb= 0.454 kg

Impact

379 ms

30 ms

598 ms

169 ms

748 ms

239 ms

1156 ms

Figure 11. Downstream sequential photographs, Test MN-1.

Figure 12. Full-Scale Vehicle Crash Test MN-1.

Figure 13. Full-Scale Vehicle Crash Test MN-1 (continued).

Figure 14. Vehicle Trajectory, Test MN-1.

Figure 15. Bridge Rail Damage, Test MN-1.

Figure 16. Test Vehicle Damage. Test MN-1.

5.2 Test MN-2 (2000P, 100 km/h, 25 deg)

The 1986 Ford F250 pickup impacted the bridge rail at 60.6 mph (97.5 km/h) and 25.5 degrees. The impact point was located 4 ft - 11 in. (1.5 m) upstream of the second expansion gap. This impact point, a summary of the test results, and sequential photographs are shown in Figure 17. Additional sequential photographs are shown in Figures 18 through 20.

Upon impact with the bridge rail, the right-front corner of the vehicle started to crush inward and the tire began to mount the curb. At 16 ms after impact, the right-front tire mounted the curb and was parallel to the rail. At 80 ms after impact, the pickup snagged on post No. 9, blowing the right-front tire, causing significant twist and deformation to the front end of the vehicle. At 130 ms, the left-front tire lost contact with the concrete apron as the vehicle was rolling in a clockwise manner, and by 229 ms after impact the vehicle reached its maximum roll angle toward the rail of 20.7 degrees. At 287 ms, the vehicle became parallel to the rail and at 479 ms the left-front tire regained contact with the ground. The vehicle exited the rail at 603 ms, and came to rest in such a manner that the right-front tire was 160 ft (48.8 m) downstream of impact and offset 13 ft - 4 in. (4.1 m) to the right of a line parallel with the front face of the rail. Damage to the bridge rail is shown in Figure 21.

The normalized occupant impact velocity was determined to be 28.1 fps (8.6 m/s) in the longitudinal direction, and 23.4 fps (7.1 m/s) in the lateral direction. The highest 10-ms average occupant ridedown decelerations were 3.8 g's (longitudinal) and 10.2 g's (lateral). The occupant risk analysis, as determined from the accelerometer data, are summarized in Figure 17 and Table 4. The accelerometer data analysis is shown in Appendix C.

The post-test investigation of the vehicle and bridge rail revealed that vehicle snagging had occurred. An analysis of the high-speed film and video tape footage of the test revealed that the pickup

and tires climbed the 6-in. (152 mm) high barrier curb, causing the vehicle bumper to rise up between the concrete parapet and structural steel tube rail. This penetration allowed the bumper to snag on the epoxy grout pad, steel base plate, steel nuts, anchor bolt ends, and structural steel tube post. Contact marks extended in approximately 1 in. (25 mm) on the upstream side of Post No. 9, indicating that the vehicle penetrated approximately 4.5 in. (114 mm) from the traffic-side face of the concrete parapet. It is noted that the top and bottom height of the vehicle's front bumper is 26.5 in. (673 mm) and 15 in. (381 mm), respectively. The total height to the top of the concrete parapet is 20 in. (508 mm). The distance from the front face of the post to the front face of the concrete parapet is 3.5 in. (89 mm).

Evidence of snagging was also found on the damaged vehicle, as can be seen in Figure 22. The front bumper had several tears and gouges near the lower right-side end. In addition, the right-side bumper support and adjacent frame were pushed backward and deformed, causing the left-side of the front bumper to push outward. The deformed bumper contacted the right-front tire, pushing the tire into the right-side floorboard. The backward movement of the tire assembly caused the right-side door and lower body to buckle. Significant undercarriage damage and deformation to the frame was observed, causing the right-side floorboard to be pushed toward the center of the vehicle.

As a result of this occupant compartment deformation, the performance of Test MN-2 on the Minnesota Combination Bridge Rail was determined to be unsatisfactory according to the occupant risk criteria set forth in NCHRP Report 350 (1).

Following this test, several retrofit options were considered to reduce the potential of the vehicle snagging on the steel posts. The retrofit option chosen for Test MN-3 is shown in Figure 7 and described in Section **2.2**. This retrofit option included extending the structural steel rail and concrete parapet 4 in. toward the roadway to reduce the potential of the vehicle snagging on the posts. This also minimized the

amount of curb extending from the parapet, reducing the potential for this curb to cause the vehicle to ride up and cause the bumper to snag on the posts.

Impact 79 ms 93 ms 287 ms 395 ms

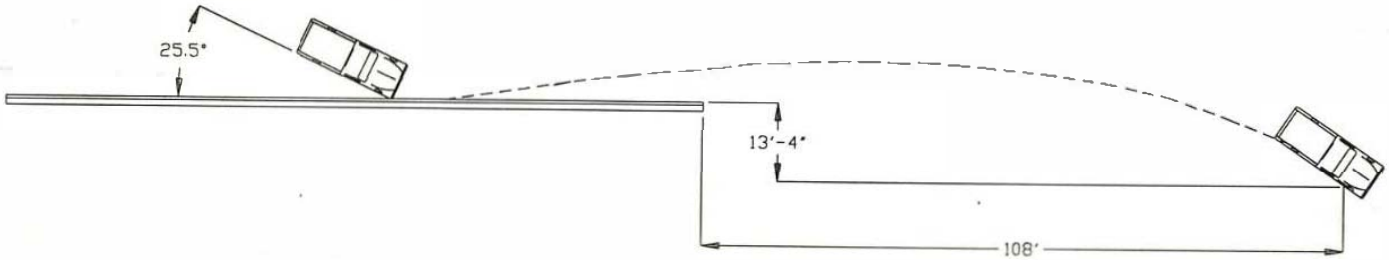

Test Number	MN-2
NCHRP 350 Test Designation	4-11
Date	10/13/94
Installation	Minnesota Combination Bridge Rail
System length	116 ft
Concrete curb	
Height	6 3/16 in.
Width	6 in.
Concrete parapet	
Height	20 in.
Width	12 in.
Steel Rail	TS 6 x 3 x ¼ in. - A500 Grade B
Steel Posts	TS 6 x 6 x ¼ in. - A500 Grade B
Vehicle Model	1986 Ford F250
Vehicle Weight	
Curb	3,930 lbs
Test Inertia	4,420 lbs
Gross Static	4,420 lbs

Speed	
Impact	60.6 mph
Exit	38.0 mph
Angle	
Impact	25.5 deg
Exit	6.3 deg
Change in Velocity	22.6 mph
Normalized Occupant Impact Velocity	
Longitudinal	28.1 fps
Lateral	23.4 fps
Occupant Ridedown Deceleration	
Longitudinal	3.8 g's
Lateral	10.2 g's
Vehicle Damage	
TAD	1-RFQ-5
VDI	01RYES3
Vehicle Rebound Distance	83 in. @ 75 ft
Bridge Rail Damage	Minor
Maximum Permanent Set Deflections	⅜ in. @ Post No. 9

Figure 17. Summary of Test MN-2.

Conversion Factors: 1 in.= 2.54 cm; 1 lb= 0.454 kg

Impact

130 ms

10 ms

229 ms

80 ms

479 ms

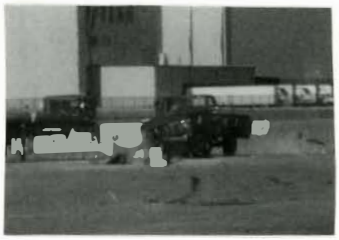

100 ms

542 ms

Figure 18. Downstream sequential photographs, Test MN-2.

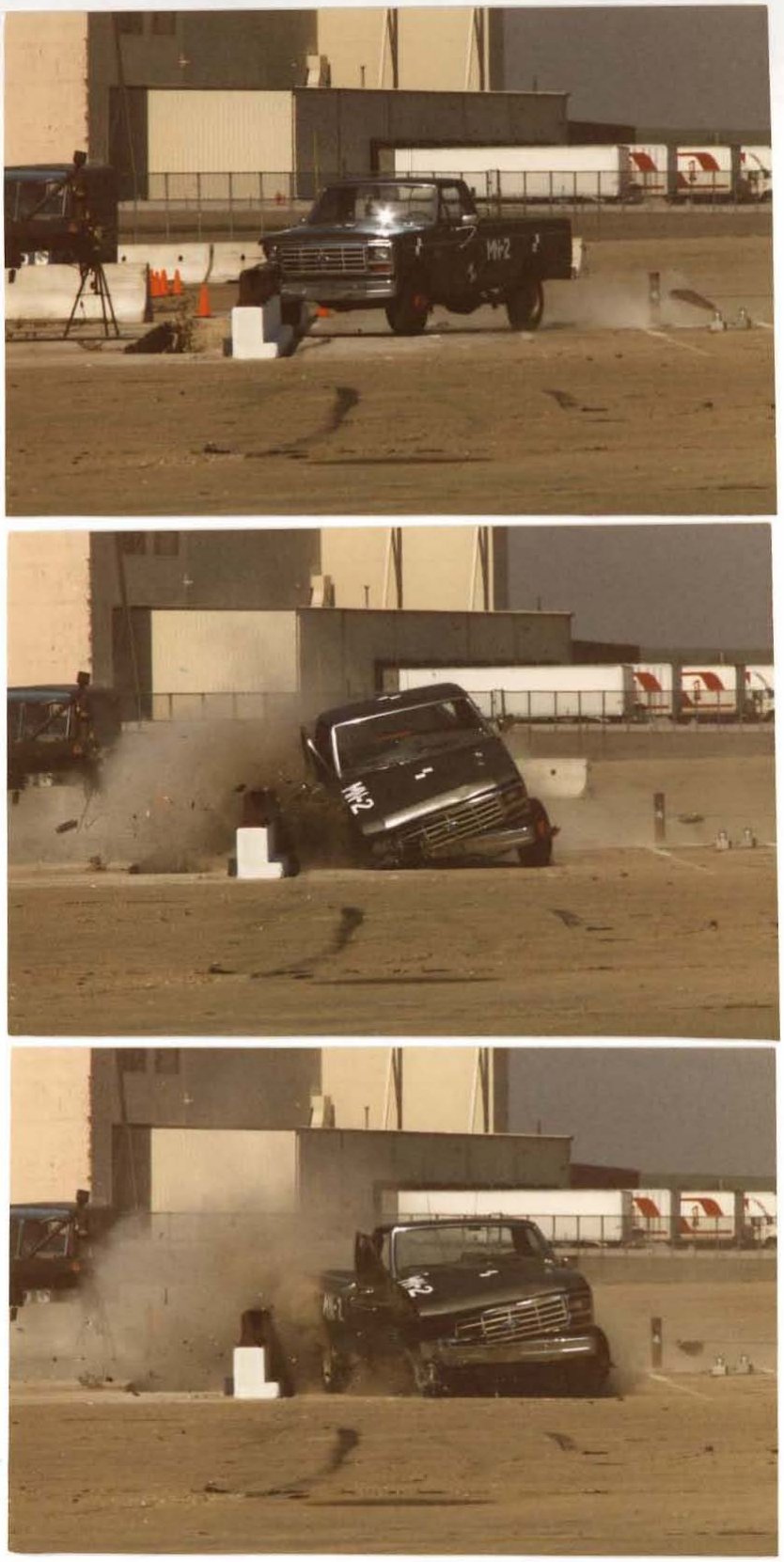

Figure 19. Full-scale Vehicle Crash Test MN-2.

Figure 20. Full-scale Vehicle Crash Test MN-2.

Figure 21. Bridge Rail Damage. Test MN-2.

Figure 22. Vehicle Damage, Test MN-2.

5.3 Test MN-3 (2000P, 100 km/h, 25 deg)

For this test, the Minnesota Combination Bridge Rail was retrofitted as described in Section 2.2 and shown in Figures 7 and 23. A 1986 Ford F250 pickup impacted the modified bridge rail at 62.5 mph (100.6 km/h) and 25.9 degrees. The impact point was located 4 ft - 11 in. (1.5 m) upstream of the second expansion gap. This impact point, a summary of the test results, and sequential photographs are shown in Figure 24. Additional sequential photographs are shown in Figure 25.

Upon impact with the bridge rail, the right-front corner of the vehicle began to crush inward. At 80 ms after impact, the maximum crush of the vehicle occurred, and at 120 ms the left-front tire of the vehicle lifted off the ground. At 190 ms the left-rear tire lost contact with the ground, and at 218 ms the pickup became parallel to the rail. The pickup exited the rail 446 ms after impact, coming to rest 190.5 ft downstream of impact and 23 ft - 10 in. to the right of a line parallel with the front face of the rail.

The damage to the bridge rail was relatively minor, as can be seen in Figure 26. This damage consisted mainly of tire marks along the rail, and minor spalling of the concrete parapet. The maximum permanent set deflection of the rail was ⅛ in. (3 mm) at post No. 7.

The normalized occupant impact velocities were determined to be 28.1 fps (8.6 m/s) in the longitudinal direction, and 23.4 fps (7.1 m/s) in the lateral direction. The highest 10-ms average occupant ridedown decelerations were 3.8 g's (longitudinal) and 10.2 g's (lateral). The occupant risk analysis, as determined from the accelerometer data, are summarized in Figure 24 and Table 4. The accelerometer data analysis is shown in Appendix D.

Although snagging between the test vehicle's bumper and the steel posts was again observed, the extent of overlap was reduced to approximately ½ in. (12 mm), and the snag forces were therefore judged to be relatively small. However, lateral forces generated between the concrete parapet and the vehicle's

front wheel and floor pan again caused deformations in the floor pan area with some deformation of the dash board and kick panel. The extent of deformation and the locations thereof are expected to cause injuries to an occupants foot and ankles and are probably not life threatening. Careful review of the high-speed films indicate that the source of the occupant compartment deformations can be contributed largely to lateral forces generated by the vertical concrete parapet. Also, prior testing of a Nebraska open concrete bridge railing (7) exhibited similar damage patterns during an impact at 60 mph (96.5 km/h) and an angle of 20 degrees. Thus, vehicle deformations observed during this test and shown in Figure 27 are believed to be representative of any impact into a rigid rail with a 2000P vehicle at a speed of 62.2 mph (100 km/h) and an angle of 25 degrees. Note that the impact speed and angle associated with this test have been shown to be extremely rare and therefore the extent of occupant compartment deformation observed during this test will seldom be replicated in the field. There was a notable improvement in the performance of the system between tests MN-2 and MN-3, as the retrofit reduced the amount of snagging on the rail posts. This was evident in the analysis of the high-speed film, as well as in the reduced degree of occupant compartment deformation.

After considering the consequences of this damage, the occupant compartment deformation criteria was judged to be marginally acceptable. All occupant risk evaluation criteria for this test were well below recommended limits. Based upon a comparison between this evaluation and similar evaluations on rigid parapets as discussed above, Test MN-3 was judged to be acceptable according to the criteria set forth in NCHRP Report 350 (1).

Figure 23. Retrofit of Minnesota Combination Bridge Rail for tests MN-3 and MN-4.

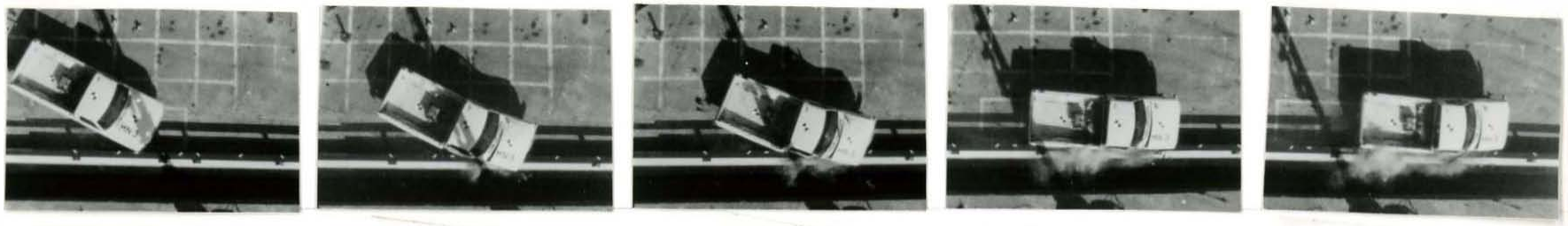

Impact 79 ms 119 ms 218 ms 277 ms

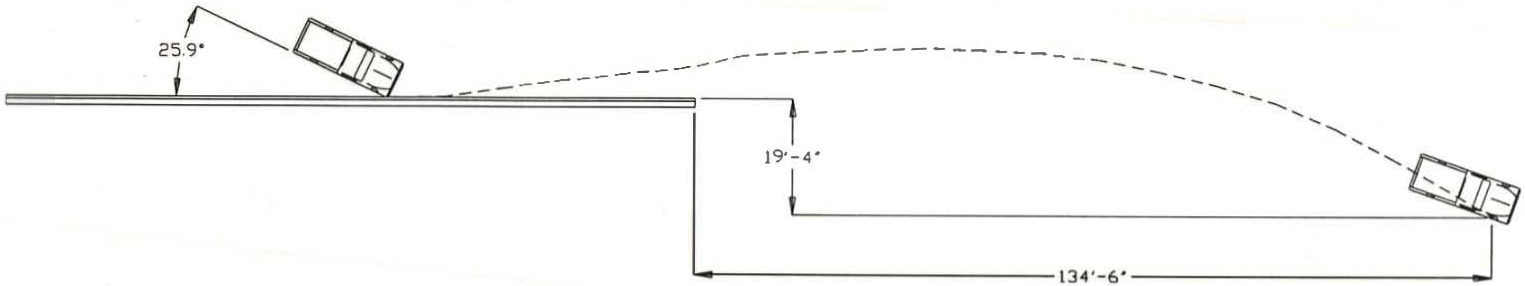

Test Number	MN-3
NCHRP 350 Test Designation	4-11
Date	3/15/95
Installation	Minnesota Combination Bridge Rail
System length	116 ft
Concrete curb	
Height	6 3/16 in.
Width	6 in.
Concrete parapet	
Height	20 in.
Width	16 in.
Steel Rail	TS 6 x 3 x ¼ in. - A500 Grade B and TS 4 x 3 x ¼ in. - A500 Grade B
Steel Posts	TS 6 x 6 x ¼ in. - A500 Grade B
Vehicle Model	1986 Ford F250
Vehicle Weight	
Curb	3,820 lbs
Test Inertia	4,442 lbs
Gross Static	4,442 lbs

Speed	
Impact	62.5 mph
Exit	41.6 mph
Angle	
Impact	25.9 deg
Exit	1.0 deg
Change in Velocity	20.9 mph
Normalized Occupant Impact Velocity	
Longitudinal	25.2 fps
Lateral	24.6 fps
Occupant Ridedown Deceleration	
Longitudinal	5.2 g's
Lateral	9.3 g's
Vehicle Damage	
TAD	1-RF[illegible]-5
VDI	01RDES3
Vehicle Rebound Distance	105 in. @ 90 ft
Bridge Rail Damage	Minor
Maximum Permanent Set Deflections	⅛ in. @ Post No. 7

Figure 24. Summary of Test MN-3.

Conversion Factors: 1 in.= 2.54 cm; 1 lb= 0.454 kg

Impact

190 ms

60 ms

216 ms

80 ms

300 ms

120 ms

670 ms

Figure 25. Downstream sequential photographs, Test MN-3.

Figure 26. Bridge Rail Damage, Test MN-3.

Figure 27. Vehicle Damage, Test MN-3.

5.4 Test MN-4 (820C, 100 km/h, 20 deg)

In this test, a 1988 Ford Festiva impacted the Minnesota Combination Bridge Rail at 61.0 mph (98.1 km/h) and 20.6 degrees. The impact point was selected according to NCHRP Report 350 (1) criteria to be 3 ft - 7¼ in. (110 mm) upstream of the centerline of post No. 8. A restrained surrogate occupant was placed in the passenger seat during the test to evaluate its interaction with the bridge rail as specified in NCHRP Report 350 (1) criteria. A summary of the test results and sequential photographs are shown in Figure 28. Additional sequential photographs are shown in Figure 29.

Upon impact with the bridge rail, the right-front corner of the vehicle was crushed inward as the vehicle began to change directions. The vehicle became parallel to the rail at 134 ms, and was smoothly redirected as it exited the rail at 246 ms. The vehicle came to rest 180 ft (55 m) downstream of the impact point, and 39 ft (12 m) to the right of a line parallel to the front face of the bridge rail.

There was virtually no damage to the bridge rail, as seen in Figure 30. The vehicle damage was deemed to be relatively light for this type of impact, as shown in Figure 31.

The normalized occupant impact velocities were determined to be 16.5 fps (5.0 m/s) in the longitudinal direction, and 27.8 fps (8.5 m/s) in the lateral direction. The highest 10-ms average occupant ridedown decelerations were 2.6 g's (longitudinal) and 10.6 g's (lateral). The occupant risk analysis, as determined from the accelerometer data, are summarized in Figure 28 and Table 4. The accelerometer data analysis is shown in Appendix E.

The performance of Test MN-4 on the Minnesota Combination Bridge Rail was determined to be satisfactory according to the criteria set forth in NCHRP Report 350 (1).

Impact 53 ms 59 ms 134 ms 246 ms

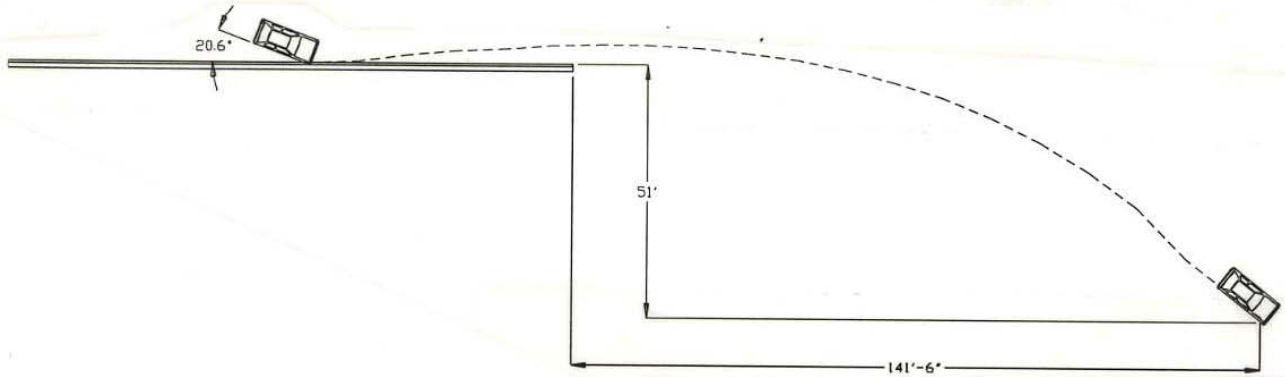

Test Number	MN-4
NCHRP 350 Test Designation	4-10
Date	5/1/95
Installation	Minnesota Combination Bridge Rail
System length	116 ft
Concrete curb	
Height	6 3/16 in.
Width	18 in.
Concrete parapet	
Height	20 in.
Width	16 in.
Steel Rail	TS 6 x 3 x ¼ in. - A500 Grade B and TS 4 x 3 x ¼ in. - A500 Grade B
Steel Posts	TS 6 x 6 x ¼ in. - A500 Grade B
Vehicle Model	1988 Ford Festiva
Vehicle Weight	
Curb	1,600 lbs
Test Inertia	1,800 lbs
Gross Static	1,960 lbs

Speed	
Impact	61.0 mph
Exit	50.2 mph
Angle	
Impact	20.6 deg
Exit	7.5 deg
Change in Velocity	10.8 mph
Normalized Occupant Impact Velocity	
Longitudinal	16.5 fps
Lateral	27.8 fps
Occupant Ridedown Deceleration	
Longitudinal	2.6 g's
Lateral	10.6 g's
Vehicle Damage	
TAD	1-RFQ-3
VDI	01RYES1
Vehicle Rebound Distance	48 in. @ 60 ft
Bridge Rail Damage	Minor
Maximum Permanent Set Deflections	None

Figure 28. Summary of Test MN-4.

Conversion Factors: 1 in.= 2.54 cm; 1 lb= 0.454 kg

Impact

158 ms

55 ms

211 ms

59 ms

261 ms

136 ms

297 ms

Figure 29. Downstream sequential photographs, Test MN-4.

Figure 30. Bridge Rail Damage, Test MN-4.

Figure 31. Vehicle Damage, Test MN-4.

Table 4. Performance Evaluation Results

Evaluation Criteria	Test MN-1	Test MN-2	Test MN-3	Test MN-4
A. Test article should contain and redirect the vehicle; the vehicle should not penetrate, underride, or override the installation although controlled lateral deflection of the test article is acceptable.	S	S	S	S
D. Detached elements, fragments or other debris from the test article should not penetrate or show potential for penetrating the occupant compartment, or present an undue hazard to other traffic, pedestrians, or personnel in a work zone. Deformations of, or intrusions into, the occupant compartment that could cause serious injuries should not be permitted.	S	U	M	S
F. The vehicle should remain upright during and after collision although moderate roll, pitching and yawing are acceptable.	S[1]	S	S	S
G. It is preferable, although not essential, that the vehicle remain upright during and after collision.	S	S[1]	S[1]	S[1]
H. Longitudinal and lateral occupant impact velocities should fall below the preferred value of 9 m/s (29.5 fps), or at least below the maximum allowable value of 12 m/s (39.3 fps).	S[1]	S[1]	S[1]	S
I. Longitudinal and lateral occupant ridedown accelerations should fall below the preferred value of 15 g's, or at least below the maximum allowable value of 20 g's.	S[1]	S[1]	S[1]	S
J. (Optional) Hybrid III dummy. Response should conform to evaluation criteria of Part 571.208, Title 49 of Code of Federal Regulation, Chapter V.	NA	NA	NA	NA[2]
K. After collision it is preferable that the vehicle's trajectory not intrude into adjacent traffic lanes.	S	S	S	S
L. The occupant impact velocity in the longitudinal direction should not exceed 12 m/s (39.3 fps) and the occupant ridedown acceleration in the longitudinal direction should not exceed 20 g's.	S[1]	S	S	S[1]
M. The exit angle from the test article preferably should be less than 60 percent of test impact angle, measured at time of vehicle loss of contact with test device.	S	S	S	S

S Satisfactory
M Marginally passed
U Unsatisfactory
NA Not Applicable
[1] Results of evaluation reported here even though it is not required by NCHRP Report No. 350 (1)
[2] An uninstrumented anthropometric test dummy was used in the test

6 DISCUSSION

Several items of interest were uncovered in the safety evaluation of this system. With this being one of the first bridge rail systems to be tested under Test Level 4 of the new NCHRP Report 350 criteria (1), many questions have arisen about the performance of pickup trucks under these severe impact conditions. The impact conditions specified for the pickup test in Test Level 4 of NCHRP Report 350 (1) consist of a 4400-lb (2000-kg) pickup impacting at 62.4 mph (100 km/h) and 25 degrees. The severity of this test is much higher than the AASHTO PL-2 pickup test (8) which has been the standard since 1989. This test consists of a 5400-lb (2450 kg) pickup impacting at 60 mph (96.6 km/h) and 20 degrees. Although the new criteria specifies a pickup with less mass at essentially the same speed, the increased angle of impact changes the impact severity from the previous 76 kip-ft (103 kN-m) to 102 kip-ft (138 kN-m). The impact severity is calculated as follows:

$$IS = \frac{1}{2} m (v \sin\theta)^2$$

with m = vehicle test inertial mass

v = impact speed

θ = impact angle

This change represents an increase of 34% in the impact severity, which appears to have a considerable effect on the amount of occupant compartment deformation for pickups. This is especially evident in recent NCHRP 350 tests conducted on vertical concrete rails (7) where buckling of the floorboard on the impact side occurs, even though no snagging takes place during the test. It is believed that this deformation phenomenon is directly attributable to the structural framework of the pickup because there is no frame component available to prevent the front tire from being pushed back into the

firewall, causing deformation of the occupant compartment.

In cases where it is more economical to do so, the substitution of chemical anchors for the cast in place anchor bolts is acceptable, as long as it has the same ultimate load capacity as the tested cast-in-place system.

7 RECOMMENDATIONS

As discussed in Section 2.3, Design No. 3 (Figure 8) is geometrically similar to the tested design (Design No. 2) shown in Figure 7, in that the clearances between the front face of the parapet, rail, and posts are identical. The bending strength of the TS 7 x 5 x 5/16 in. tube in Design No. 3 is also slightly higher than that of the TS 6 x 6 x ¼ in. used in Design No. 2. An acceptable alternate design would include substituting a TS 10 x 4 x ¼ in. rail for the TS 6 x 3 x ¼ in. and TS 4 x 3 x ¼ in. rails in Design No. 2. Based on the safety evaluation described herein, it is recommended that both of these designs of the Minnesota Combination Bridge Rail be accepted for use on federal aid projects.

8 CONCLUSIONS

A safety performance evaluation was conducted on the Minnesota concrete parapet with brush curb and metal rail (Minnesota Combination Bridge Rail). After a number of design revisions, the safety performance of the system was found to be acceptable according to the procedures and criteria provided for Test Level 4 in the National Cooperative Highway Research Program (NCHRP) Report No. 350 (1) *Recommended Procedures for the Safety Performance Evaluation of Highway Features.* It is recommended that both Design No. 2 (Figure 7) with a TS 10 x 4 x ¼ in. rail substituted for the TS 6 x 3 x ¼ in. and TS 4 x 3 x ¼ in. rails and Design No. 3 (Figure 8) be accepted for use on federal aid projects.

9 REFERENCES

1. *Recommended Procedures for the Safety Performance Evaluation of Highway Features*, National Cooperative Highway Research Program Report 350, Transportation Research Board, Washington, D.C., 1993.

2. Hinch, J., Yang, T-L, and Owings, R., *Guidance Systems for Vehicle Testings*, ENSCO, Inc., Springfield, VA, 1986.

3. *Guide Specifications for Bridge Railings*, American Association of State Highway and Transportation Officials, Washington, D.C., 1989.

4. *Roadside Design Guide*, American Association of State Highway and Transportation Officials, Washington, D.C., October, 1988.

5. *Vehicle Damage Scale for Traffic Investigators*, Traffic Accident Data Project Technical Bulletin No. 1, National Safety Council, Chicago, IL, 1971.

6. *Collision Deformation Classification, Recommended Practice J224 March 1980*, SAE Handbook Vol. 4, Society of Automotive Engineers, Warrendale, Penn., 1985.

7. Holloway, J.C., Faller, R.K., Wolford, D., Dye, Donald. D., *Performance Level 2 Evaluation of the Nebraska Open Concrete Bridge Rail*, Draft Report submitted to the Nebraska Department of Roads, Midwest Roadside Safety Facility, Civil Engineering Department, University of Nebraska-Lincoln, March 1996.

8. *Guide Specifications for Bridge Railings*, American Association of State Highway and Transportation Officials, Washington, D.C., 1989.

10 APPENDICES

APPENDIX A.

Test Vehicle Information

Figure A-1. Test Vehicle, Test MN-1.

Figure A-2. Test Vehicle Dimensions, Test MN-1.

Figure A-3. Test Vehicle, Test MN-2.

Figure A-4. Test Vehicle Dimensions, Test MN-2.

Figure A-5. Test Vehicle, Test MN-3.

Figure A-6. Test Vehicle Dimensions, Test MN-3.

Figure A-7. Test Vehicle, Test MN-4.

Figure A-8. Test Vehicle Dimensions, Test MN-4.

Figure A-1. Test Vehicle, Test MN-1.

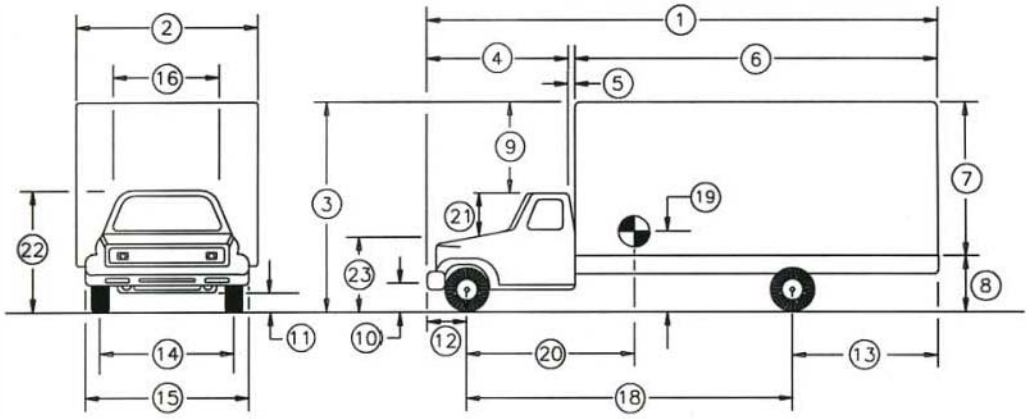

Model 1987 Ford F600

Test Inertial Weight: (kg/lbs)

Total Weight	8165/(18000)
Front Weight	3910/(8620)
Rear Axle Weight	4255/(9380)
Ballast	3025/(6670)

1	Overall Length	960/(378)
2	Overall Width	241/(95)
3	Overall Front Height	344/(135.6)
4	Cab Length	254/(100)
5	Cap Length	15.2/(6)
6	Trailer/Box Length	691/(272)
7	Rear Body Height	236/(92.75)
8	Floor Height	109/(42.875)
9	Roof Height Differential	128/(50.5)
10	Front Ground Clearance	27.0/(10.625)
11	Minimum Ground Clearance	25.4/(10)
12	Front Overhang	86.4/(34)
13	Rear Overhang	274/(108)
14	Front Track Width	204.5/(80.5)
15	Front Bumper Width	237.5/(93.5)
16	Roof Width	155/(61)
17	Typical Tire Size and Diameter	96.5/(38)
18	Wheel Base	599/(236)
19	C.G. Height	124.5/(49)
20	C.G. Longitudinal Distance	316/(124.5)
21	Roof-Hood Distance	51/(20)
22	Roof Height	217/(85.5)
23	Hood Height	165/(65.125)
24	Ground Clearance (Rear Axle)	10/(25.4)

NOTE: NO SCALE
All measurements are in cm/(in.)

Figure A-2. Test Vehicle Dimensions, Test MN-1.

Figure A-3. Test Vehicle, Test MN-2.

Date: 10/13/94 Test No.: MN-2 Model: F-250

Make: Ford Vehicle I.D.#: 1FTEF25N5GPA05216

Tire Size: LT215/85R16 Year: 1986 Odometer: 33906

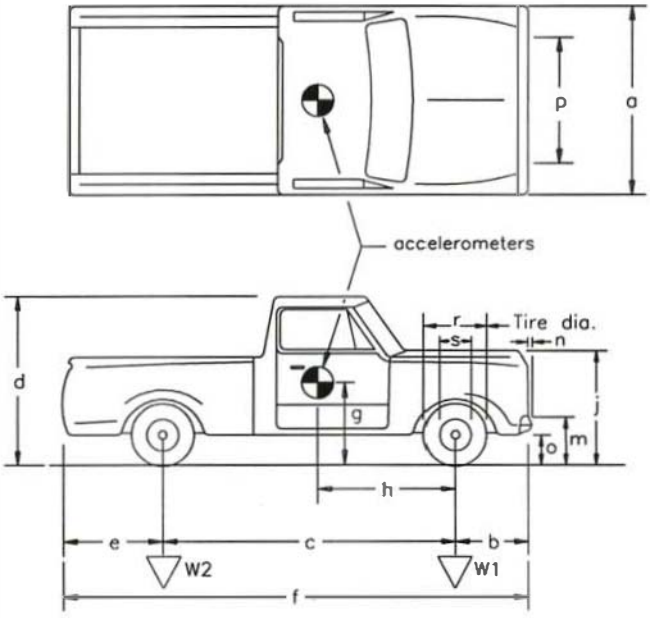

Vehicle Geometry – cm (in.)

a	190.5/(75)	b	73.7/(29)
c	337/(132.5)	d	185/(74.5)
e	132/(52)	f	542/(213.5)
g	68.6/(27)	h	150/(59)
i	–	j	122/(48)
k	–	l	–
m	67.3/(26.5)	n	8.9/(3.5)
o	38.1/(15)	p	166/(65.5)
r	74.9/(29.5)	s	44.5/(17.5)

Engine Type: V8

Engine Size: 302 (5.0L)

Transmission Type:

(Automatic) or Manual

FWD or (RWD) or 4WD

Weight – (kg/lbs)	Curb	Test Inertial	Gross Static
W1	758/(1670)	892/(1966)	892/(1966)
W2	1025/(2260)	1113/(2454)	1113/(2454)
Wtotal	1783/(3930)	2005/(4420)	2005/(4420)

Note any damage prior to test: None

Figure A-4. Test Vehicle Dimensions, Test MN-2.

Figure A-5. Test Vehicle, Test MN-3.

Date: 3/15/95 Test No.: MN-3 Model: F-250

Make: Ford Vehicle I.D.#: 1FTEF25Y36KA92959

Tire Size: LT215/85R16 Year: 1986 Odometer: 118889

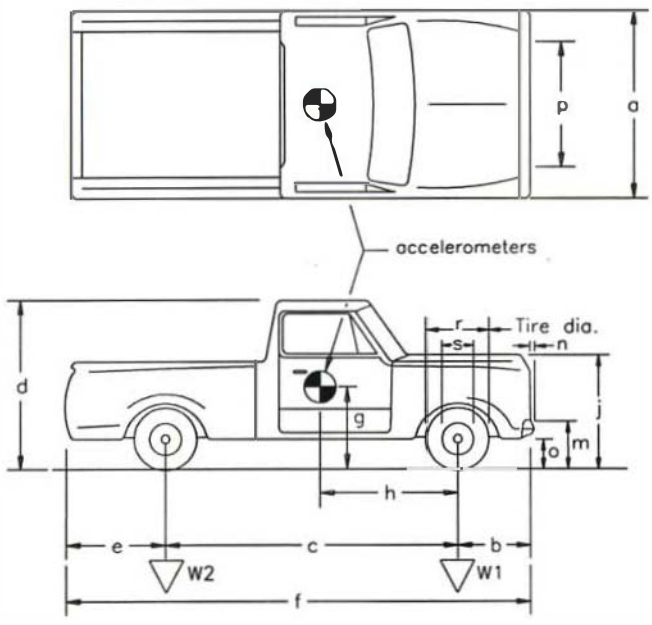

Vehicle Geometry – cm (in.)

a	189/(74.5)	b	76.2/(30)
c	339/(133.5)	d	183/(72)
e	126/(49.5)	f	541/(213)
g	70.5/(27.75)	h	155/(61)
i	–	j	122/(48)
k	–	l	–
m	66/(26)	n	12.7/(5)
o	45.7/(18)	p	167/(65.75)
r	78.7/(31)	s	45.7/(18)

Engine Type: 6 cyl.

Engine Size: 4.9L

Transmission Type:

(Automatic) or Manual

FWD or (RWD) or 4WD

Weight – (kg/lbs)	Curb	Test Inertial	Gross Static
W1	980/(2160)	1095/(2415)	1095/(2415)
W2	753/(1660)	919/(2027)	919/(2027)
Wtotal	1733/(3820)	2015/(4442)	2015/(4442)

Note any damage prior to test: Dent on rear left side of box.

Figure A-6. Test Vehicle Dimensions, Test MN-3.

Figure A-7. Test Vehicle, Test MN-4.

Make:	Ford	Test No.:	MN-4	Vehicle Geometry centimeters (in.)	
Model:	Festiva	Tire Size:	145 SR 12	a — 161 (63.5)	b — 68.6 (27.0)
Year:	1988	VIN:	KNJBT06K5J6190415	c — 229 (90)	d — 145 (57)
				e — 57.2 (22.5)	f — 354 (139.5)
				g — 55.9 (22.0)	h — 86.4 (34)
				j — 45.1 (17.75)	m — 14.0 (5.5)
				n — 12.7 (5.0)	o — 39.4 (15.5)
				p — 141 (55.5)	q — 141 (55.5)
				r — 53.3 (21)	s — 33.0 (13)
				t — 77.5 (30.5)	

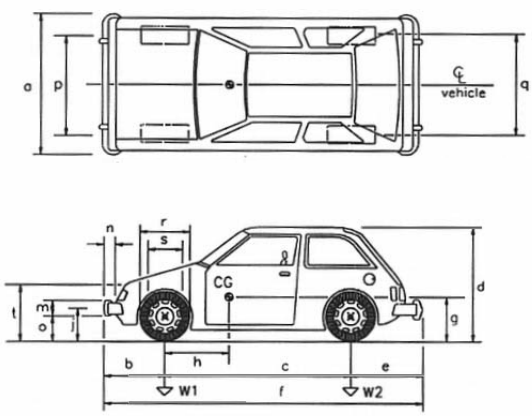

Engine Size: 4 cyl.

Transmission: Manual

Weight: kg (lbs)	Curb	Test Inertial	Gross Static
W1	494 (1090)	509 (1123)	546 (1203)
W2	277 (610)	307 (677)	343 (757)
Wtotal	771 (1700)	816 (1800)	889 (1960)

Damage prior to test: Driver's side rear fender damaged.

Figure A-8. Test Vehicle Dimensions, Test MN-4.

APPENDIX B.

Accelerometer Data Analysis - Test MN-1

Figure B-1. Lateral Deceleration, Test MN-1.

Figure B-2. Lateral Change in Velocity, Test MN-1.

Figure B-3. Longitudinal Deceleration, Test MN-1.

Figure B-4. Relative Longitudinal Change in Velocity, Test MN-1.

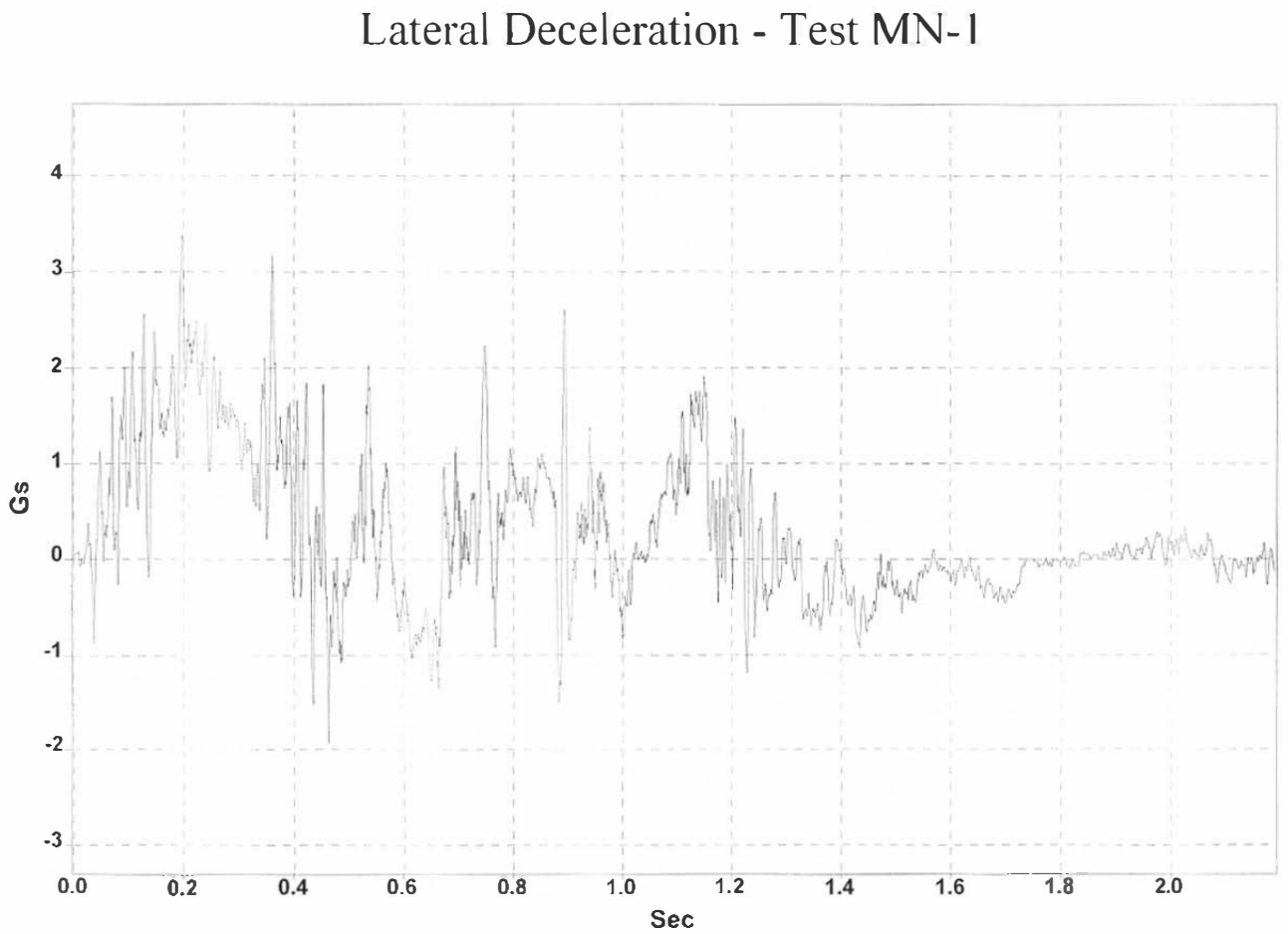

Figure B-1. Lateral Deceleration, Test MN-1.

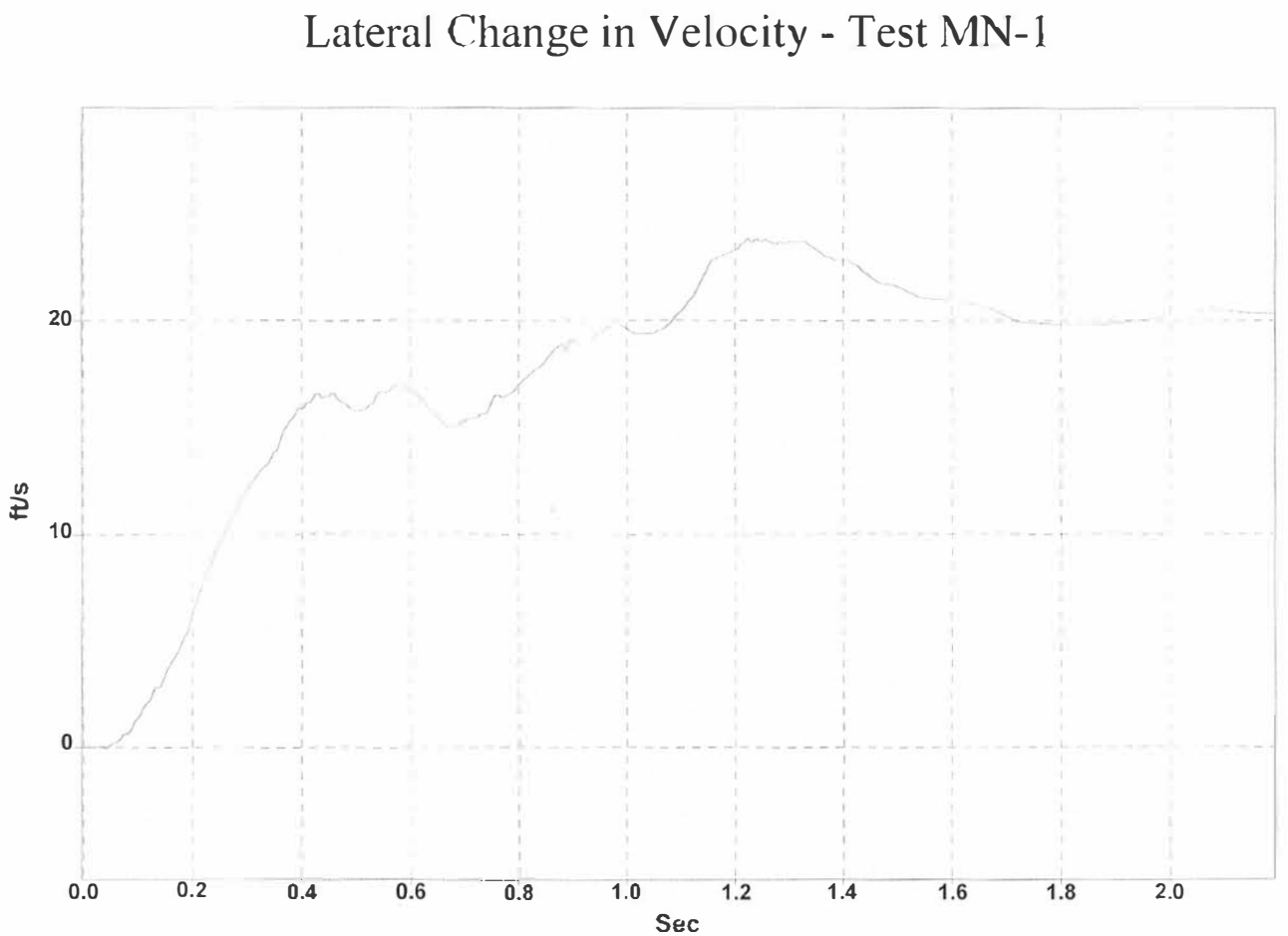

Figure B-2. Lateral Change in Velocity, Test MN-1.

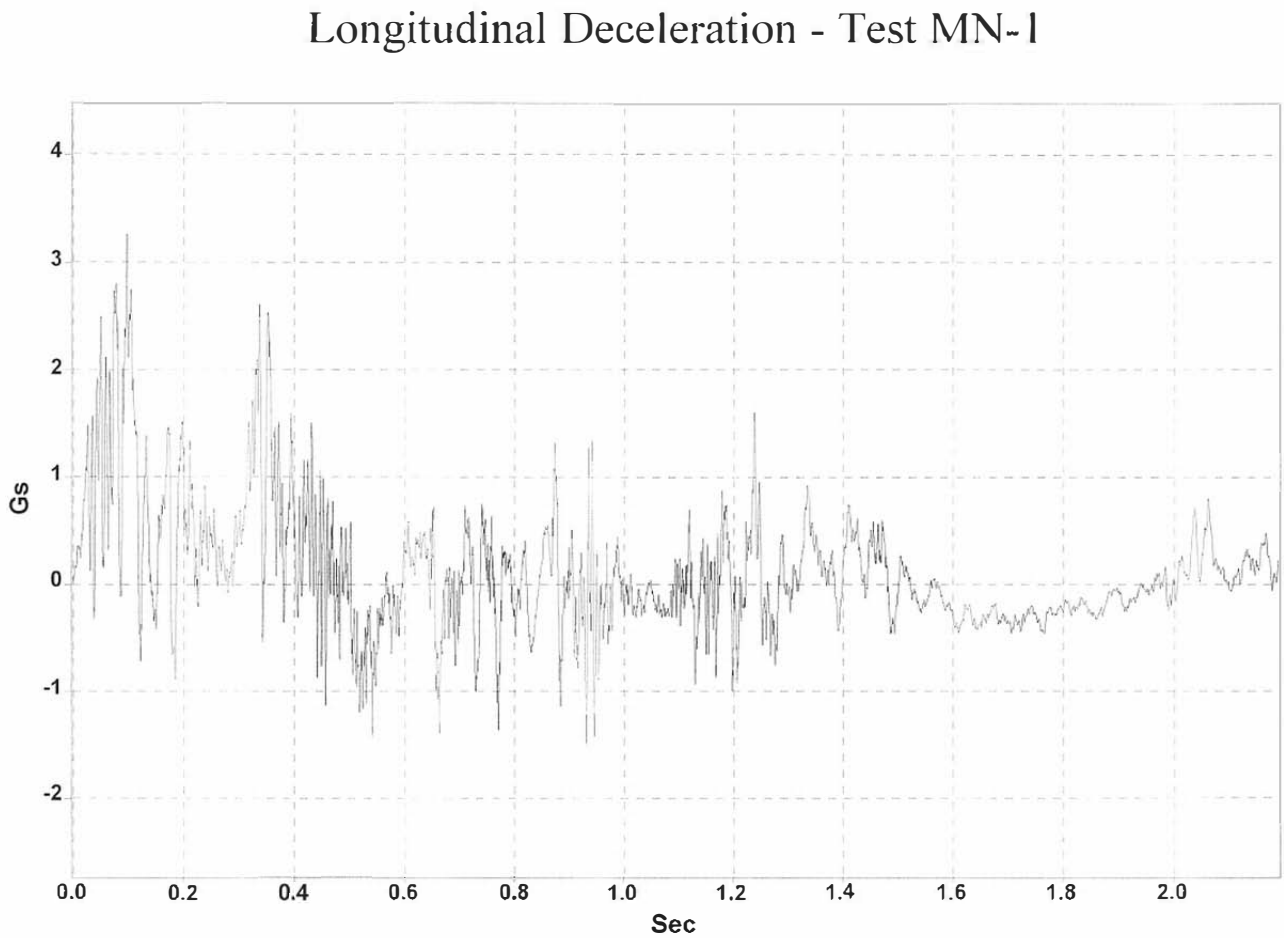

Figure B-3. Longitudinal Deceleration, Test MN-1.

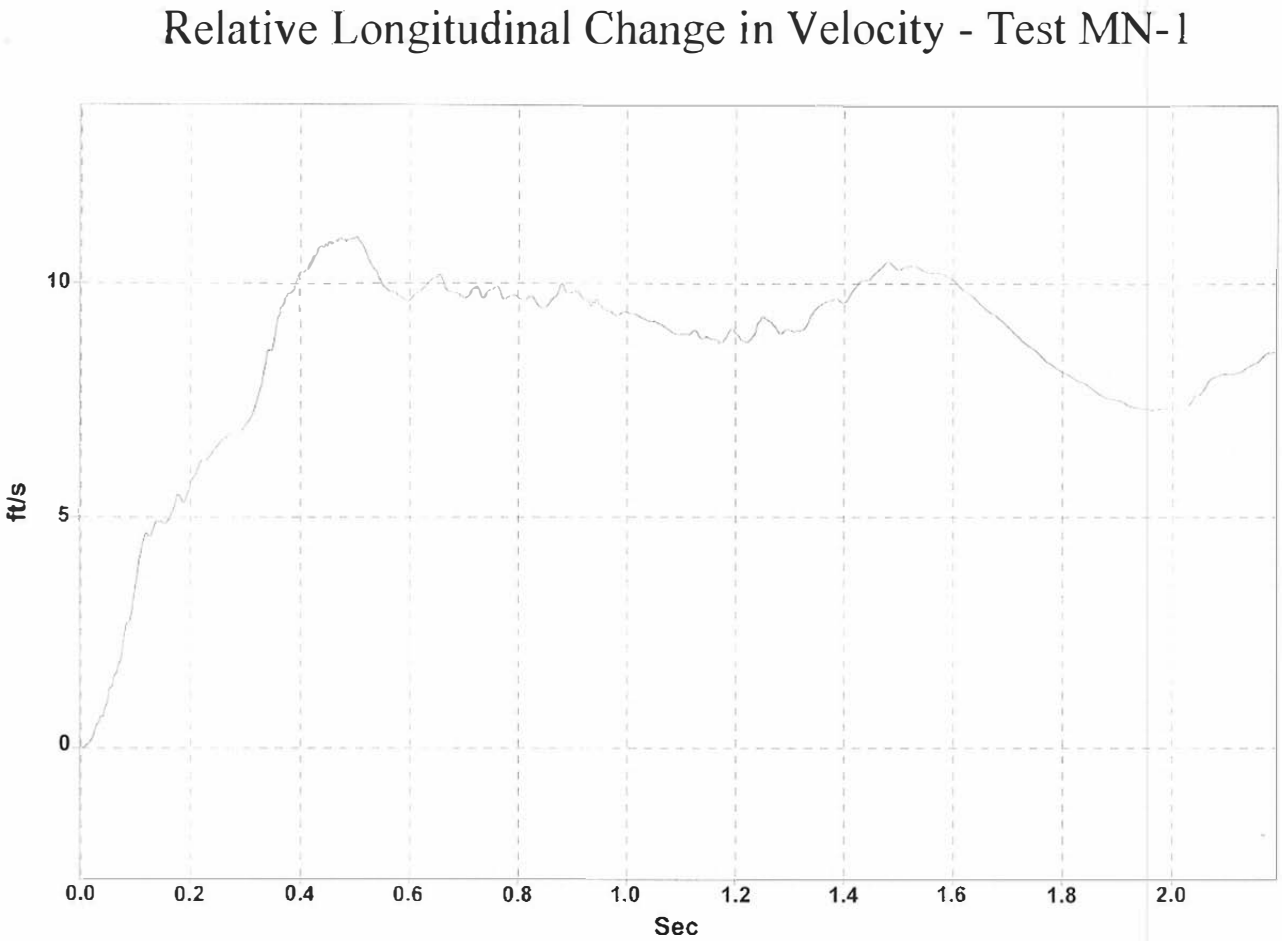

Figure B--4. Relative Longitudinal Change in Velocity, Test MN-1.

APPENDIX C.

Accelerometer Data Analysis - Test MN-2

Figure C-1. Lateral Deceleration, Test MN-2.

Figure C-2. Lateral Change in Velocity, Test MN-2.

Figure C-3. Longitudinal Deceleration, Test MN-2.

Figure C-4. Relative Longitudinal Change in Velocity, Test MN-2.

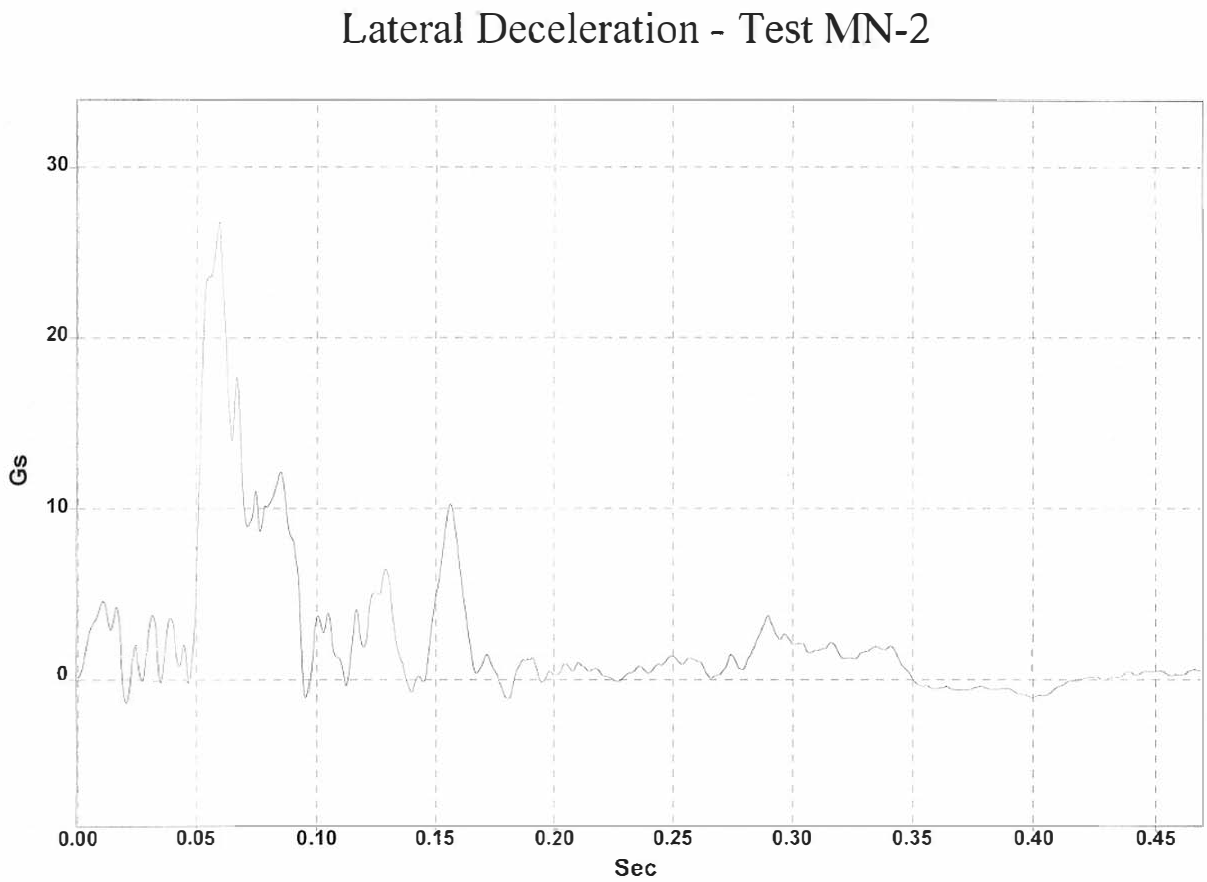

Figure C-1. Lateral Deceleration, Test MN-2.

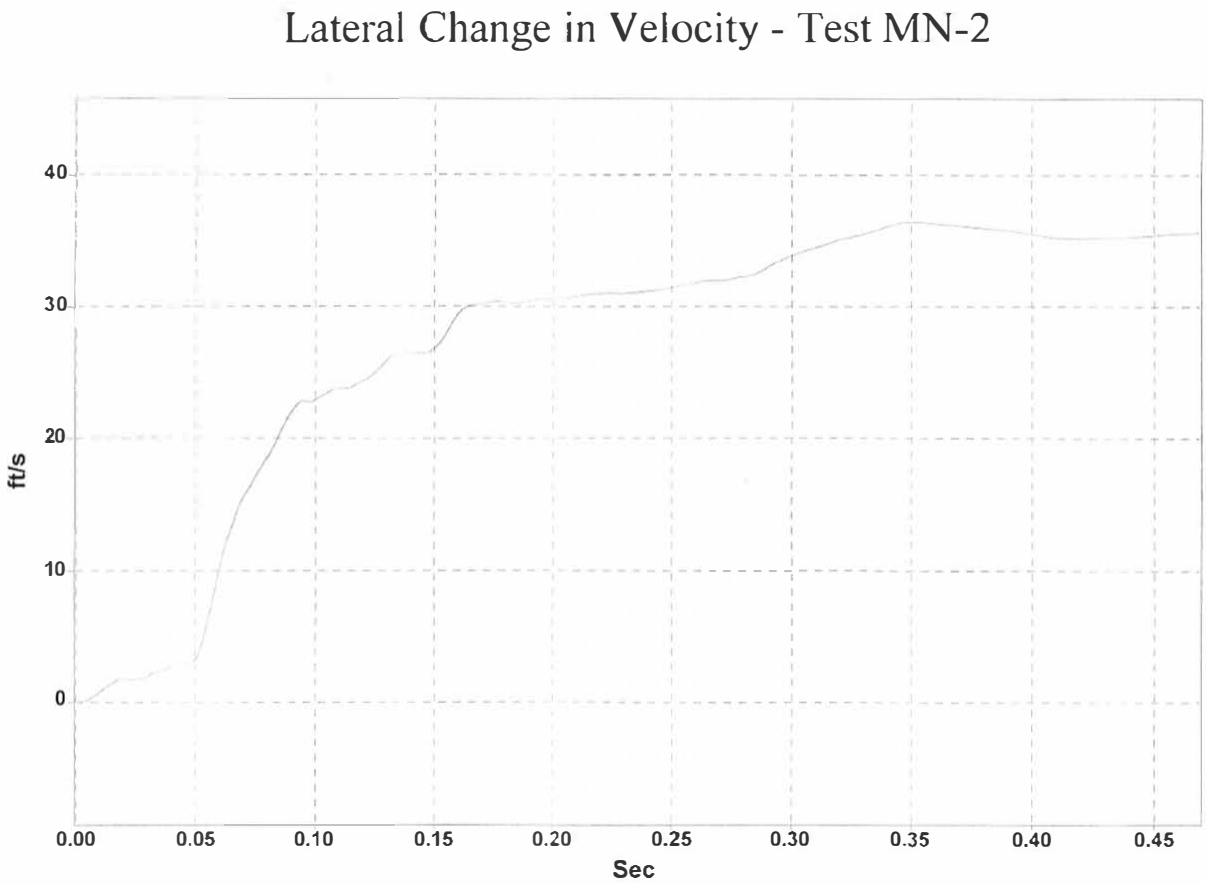

Figure C-2. Lateral Change in Velocity, Test MN-2.

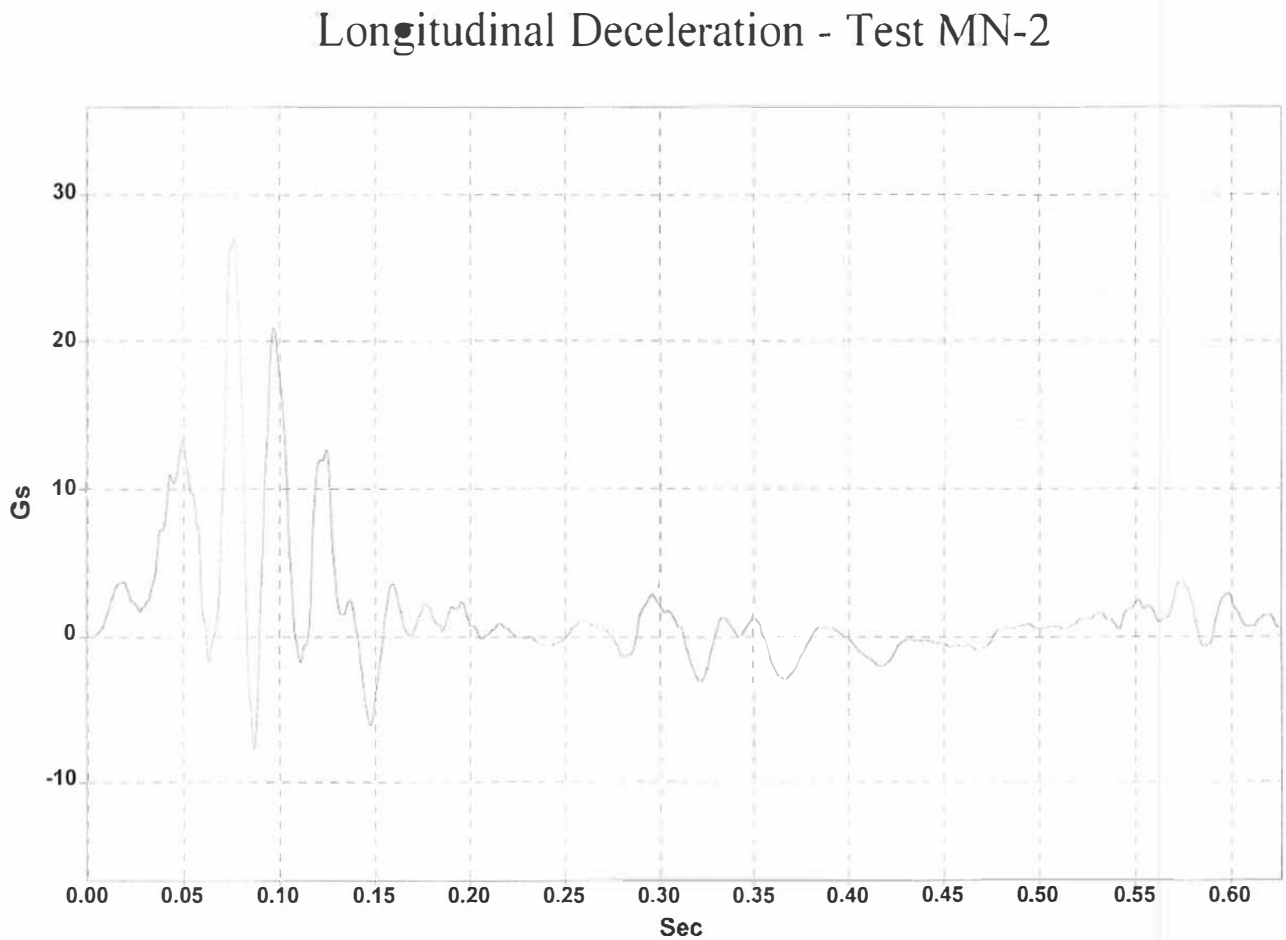

Figure C-3. Longitudinal Deceleration, Test MN-2.

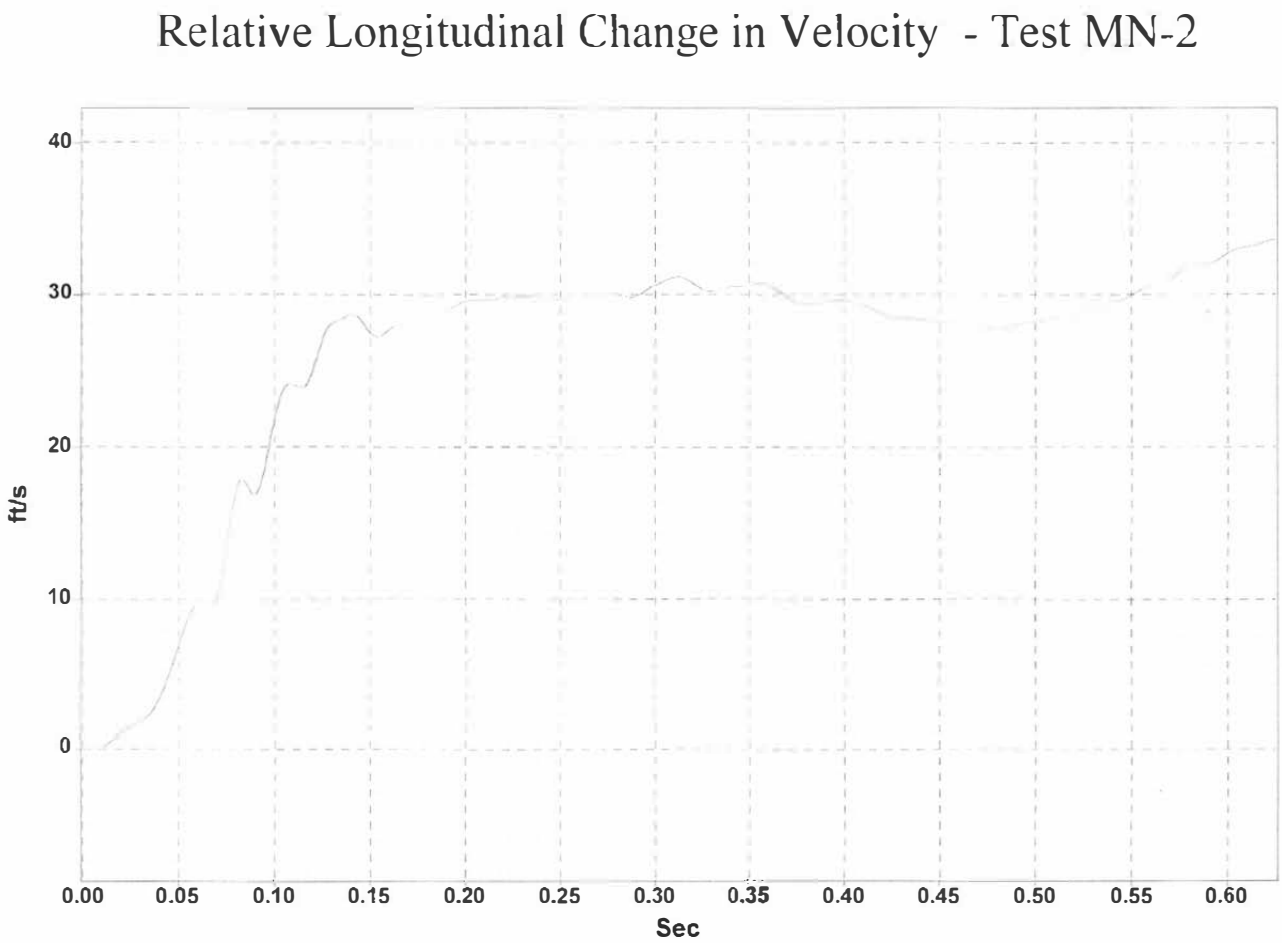

Figure C-4. Relative Longitudinal Change in Velocity, Test MN-2.

APPENDIX D.

Accelerometer Data Analysis - Test MN-3

Figure D-1. Lateral Deceleration, Test MN-3.

Figure D-2. Lateral Change in Velocity, Test MN-3.

Figure D-3. Longitudinal Deceleration, Test MN-3.

Figure D-4. Relative Longitudinal Change in Velocity, Test MN-3.

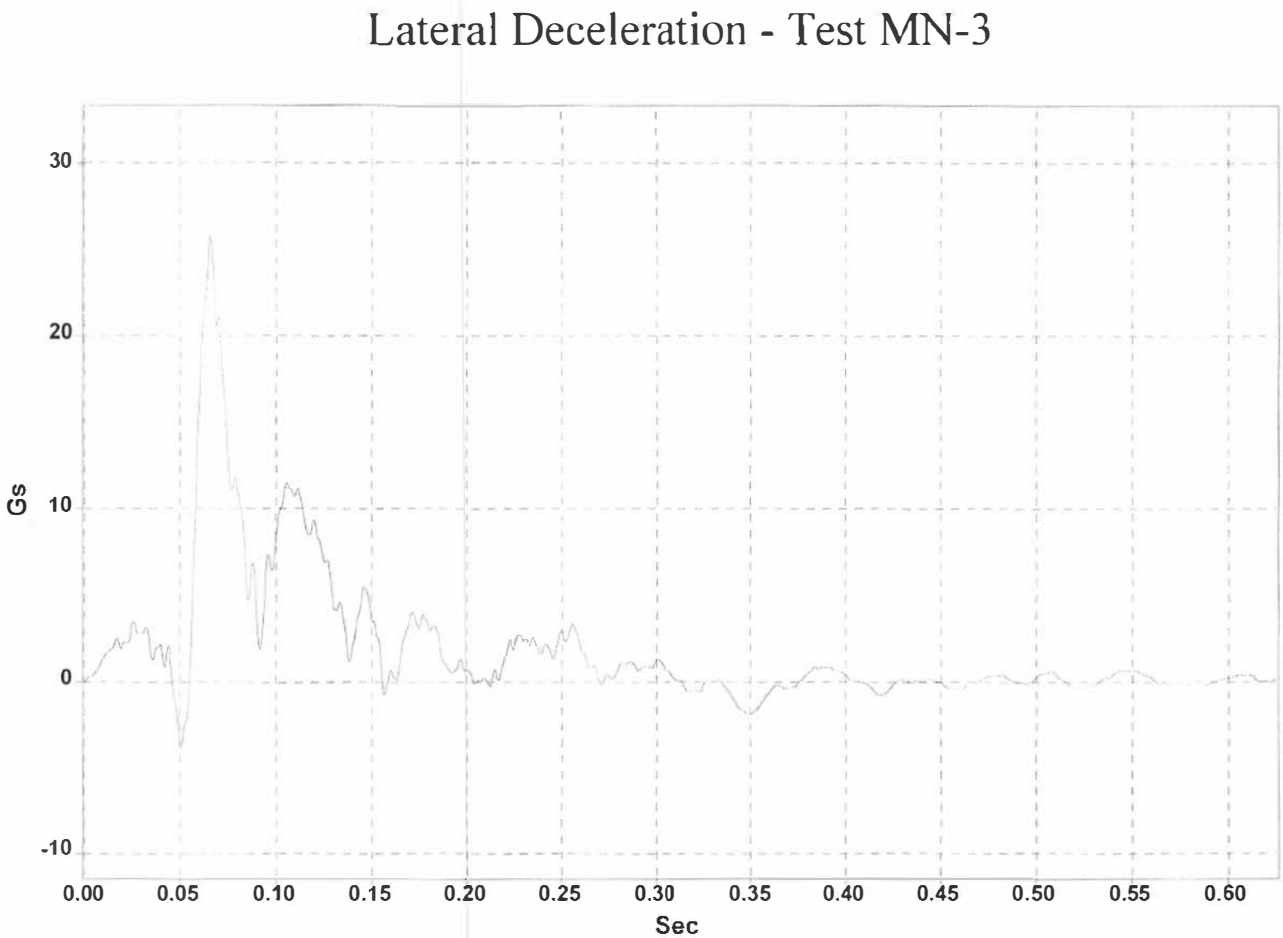

Figure D-1. Lateral Deceleration, Test MN-3.

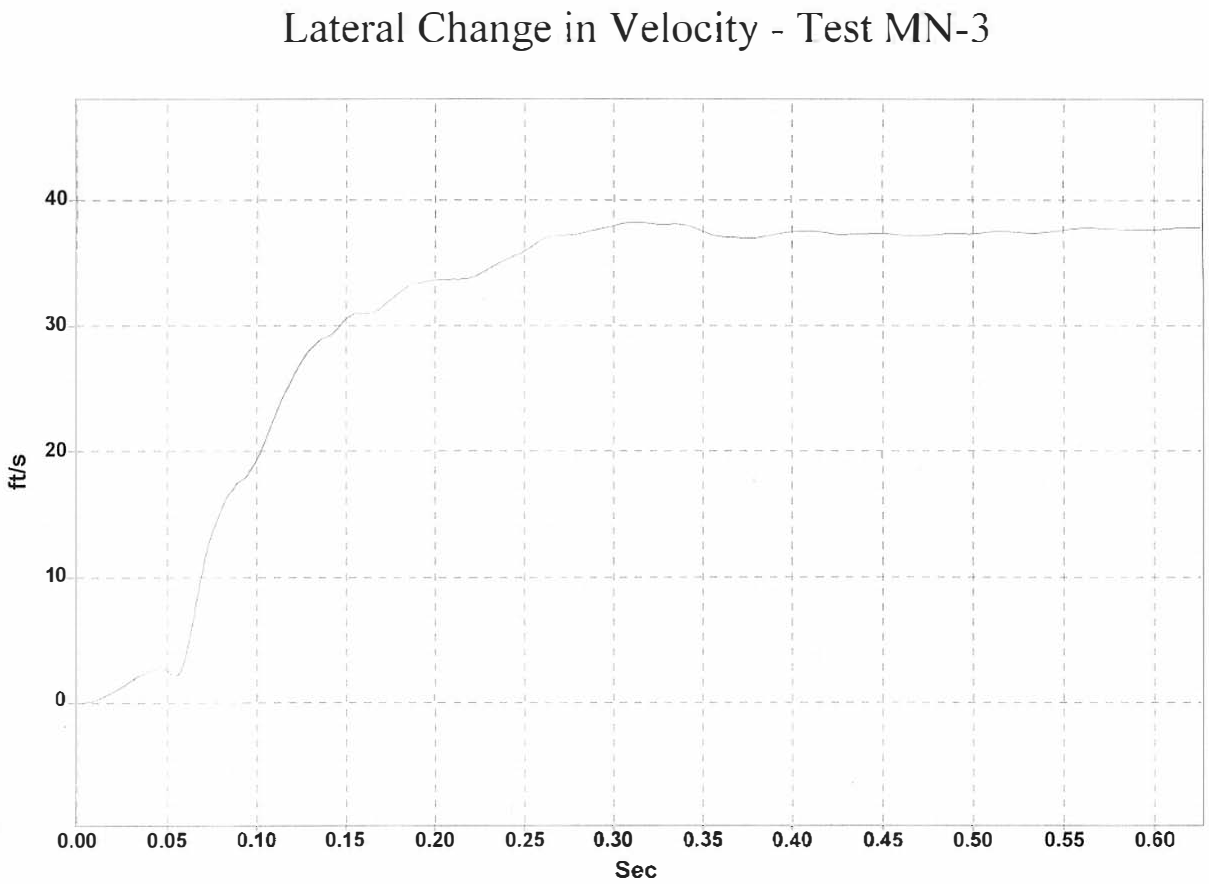

Figure D-2. Lateral Change in Velocity, Test MN-3.

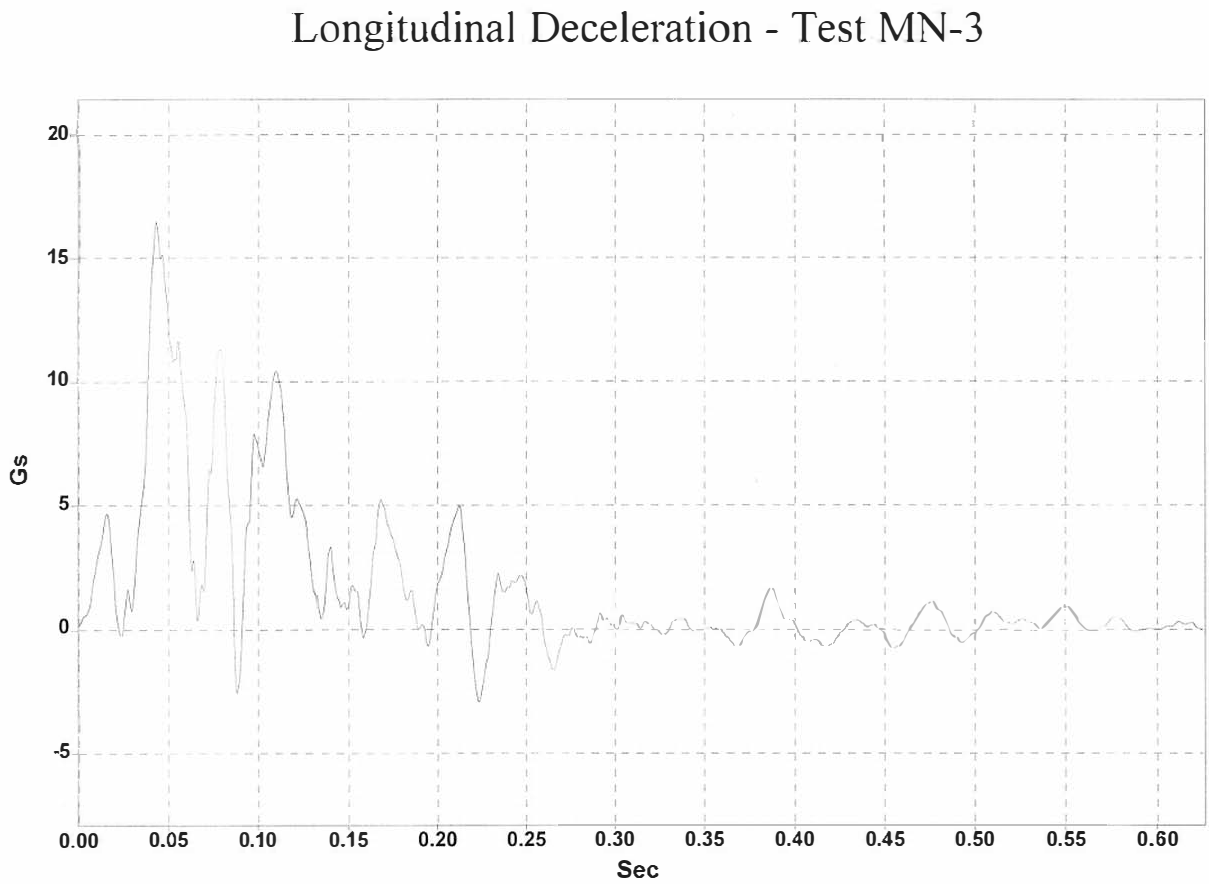

Figure D-3. Longitudinal Deceleration, Test MN-3.

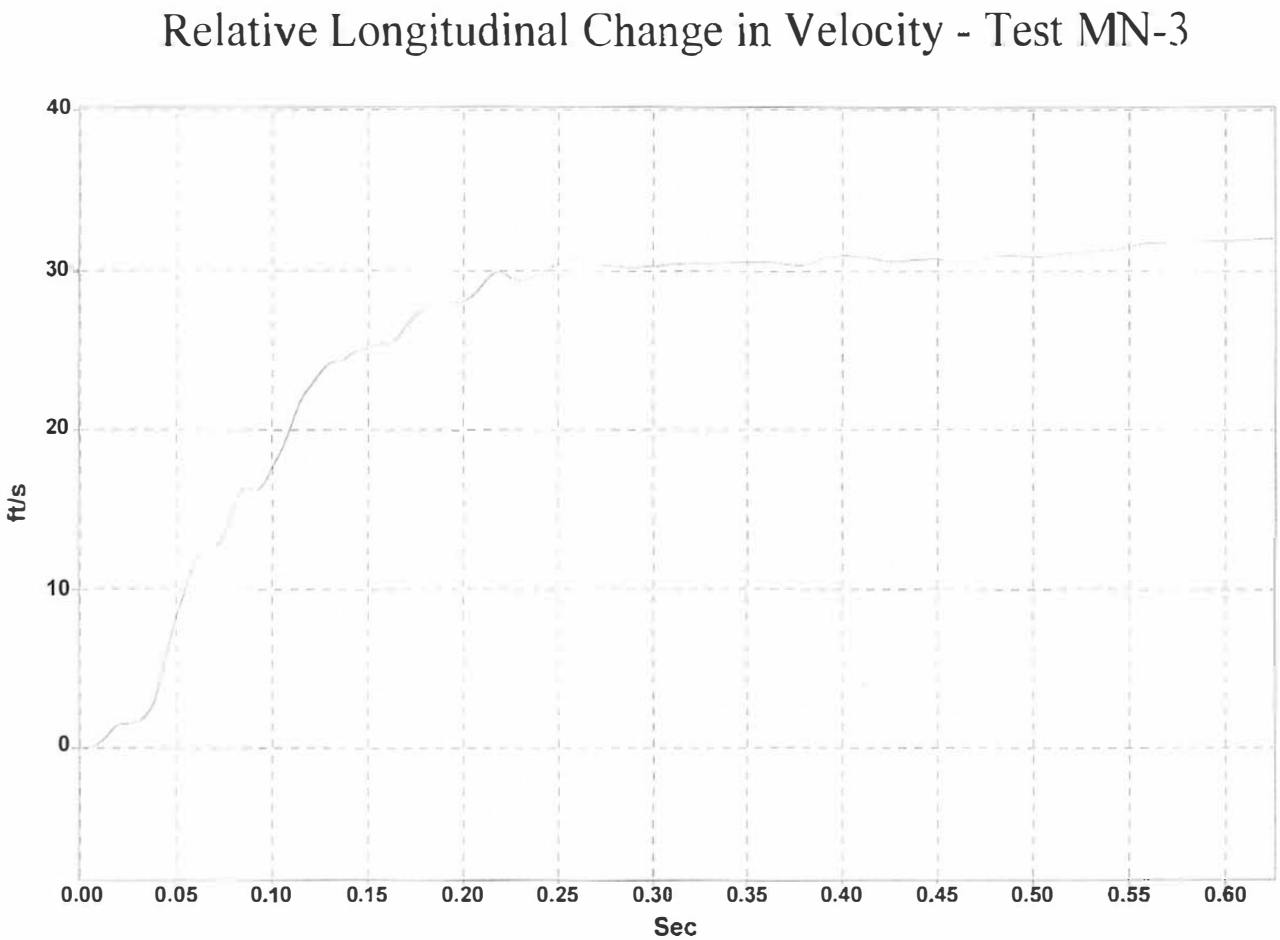

Figure D-4. Relative Longitudinal Change in Velocity, Test MN-3.

APPENDIX E.

Accelerometer Data Analysis - Test MN-4

Figure E-1. Lateral Deceleration, Test MN-4.

Figure E-2. Lateral Change in Velocity, Test MN-4.

Figure E-3. Longitudinal Deceleration, Test MN-4.

Figure E-4. Relative Longitudinal Change in Velocity, Test MN-4.

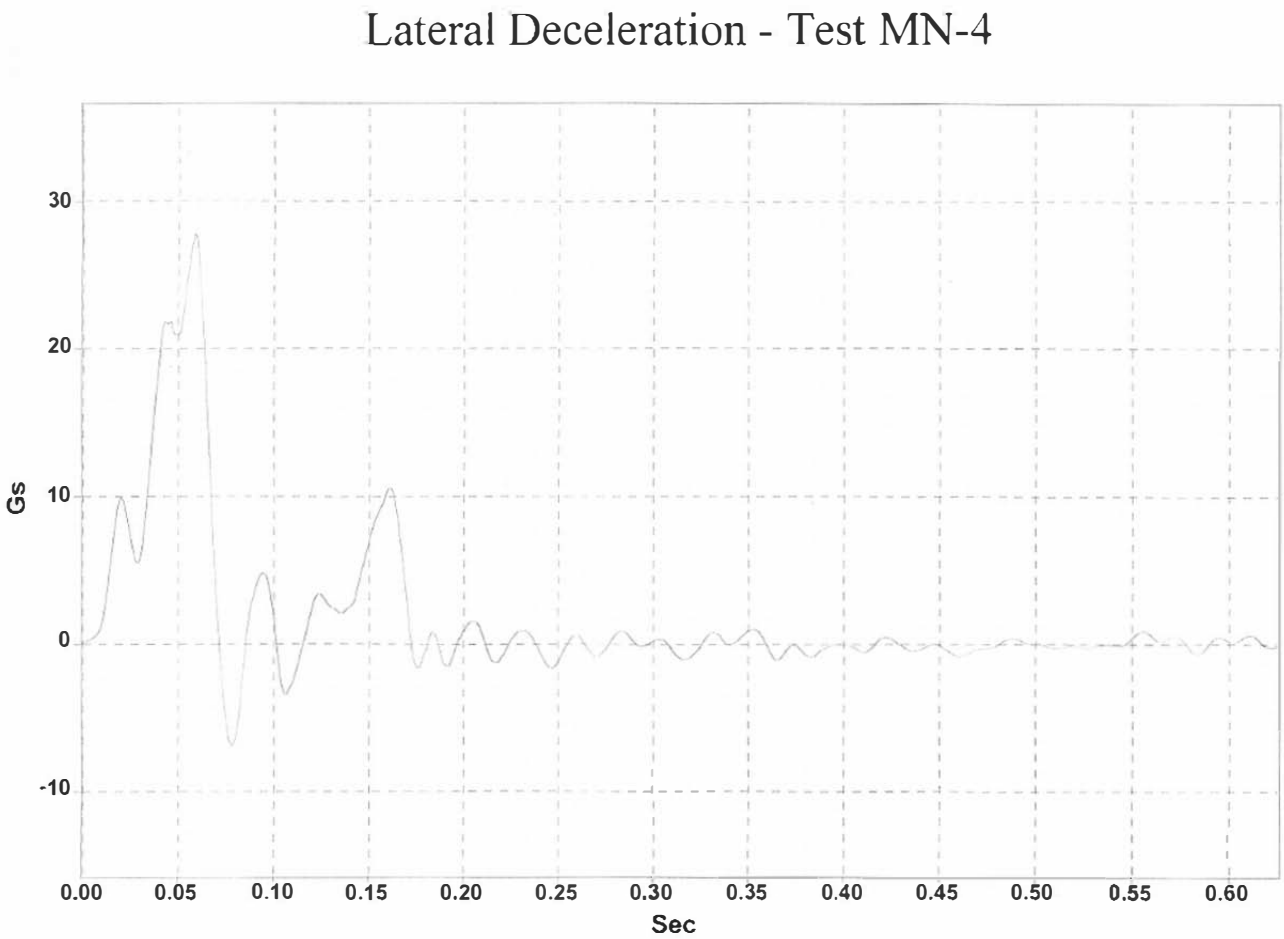

Figure E-1. Lateral Deceleration, Test MN-4.

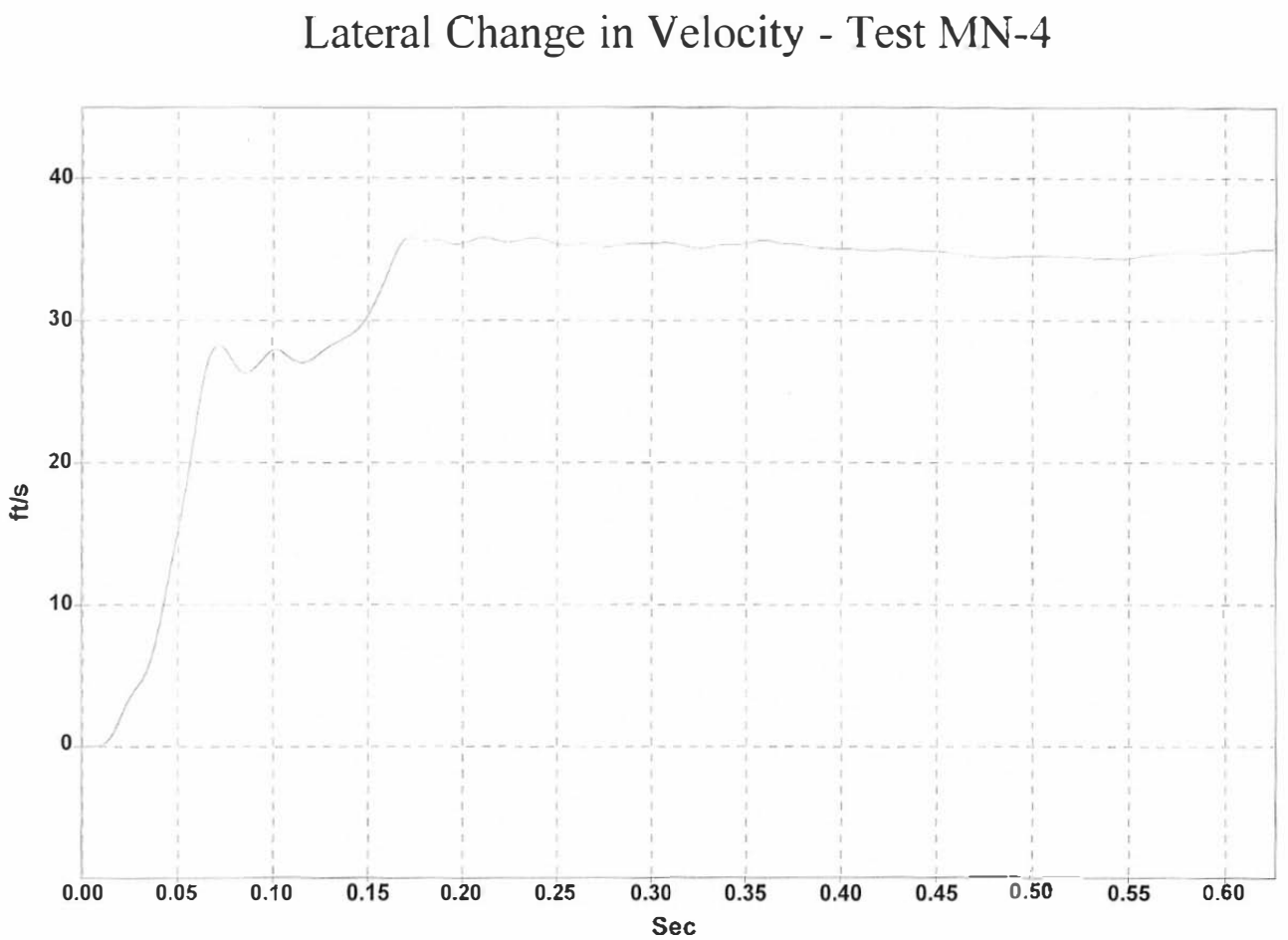

Figure E-2. Lateral Change in Velocity, Test MN-4.

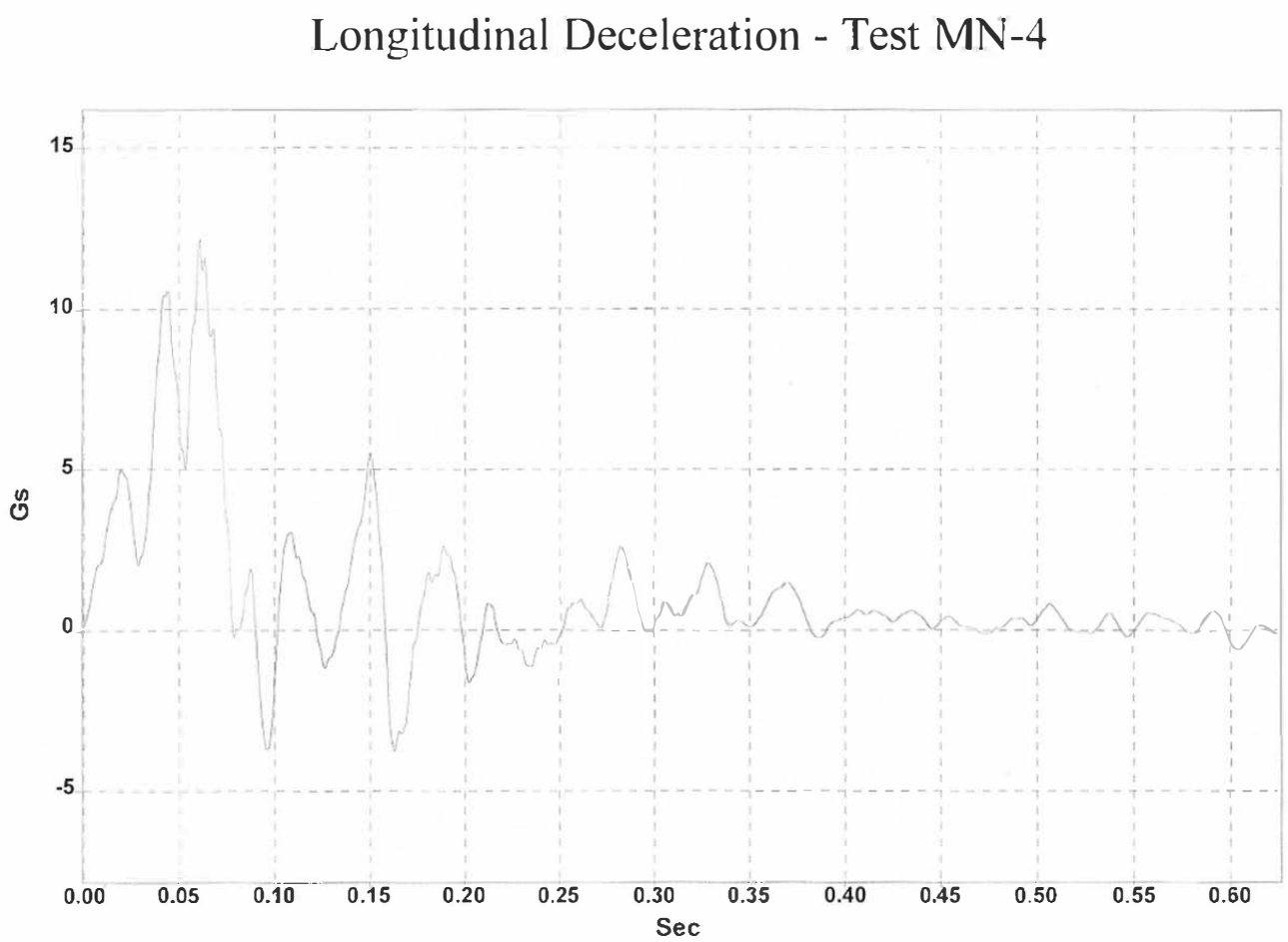

Figure E-3. Longitudinal Deceleration, Test MN-4.

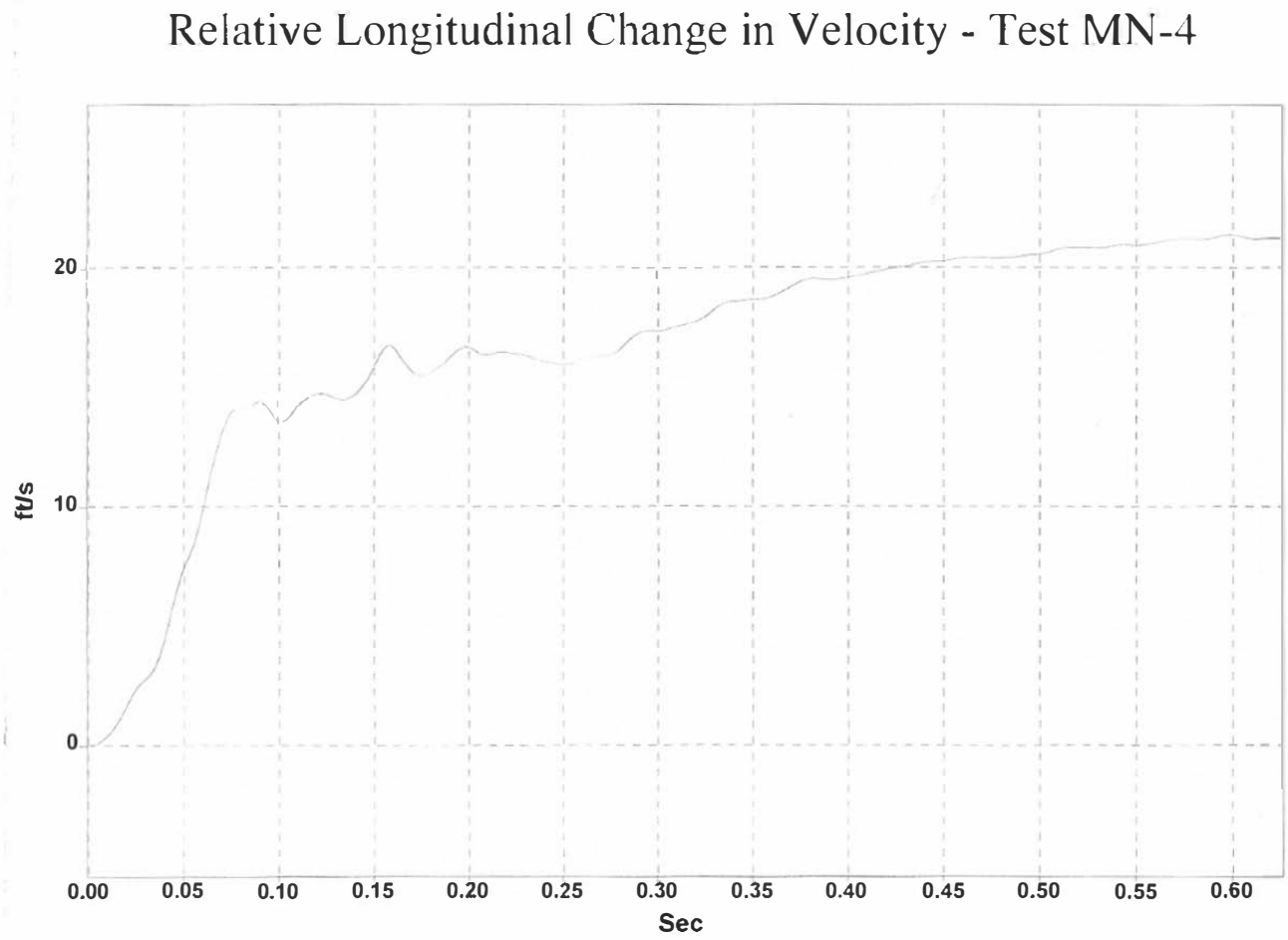

Figure E-4. Relative Longitudinal Change in Velocity, Test MN-4.