Midwest State's Regional Pooled Fund Research Program - Fiscal Year 1993
NDOR Research Project Number RES1(0099) P473

Performance Evaluation of Missouri's 6-in. Barrier Curb Under W-Beam Guardrail

James C. Holloway
Research Associate Engineer

Barry T. Rosson, Ph.D., P.E.
Assistant Professor

Midwest Roadside Safety Facility (MwRSF)
Center for Infrastructure Research

Department of Civil Engineering
University of Nebraska-Lincoln
1901 Y Street, Building C
Lincoln, Nebraska 68588-0601
Telephone (402) 472-9197

Sponsored by the

Midwest States Regional Pooled Fund
Missouri Highway and Transportation Department (MHTD)
P.O. Box 270
Jefferson City, Missouri 65102

April 1994

University of
Nebraska
Lincoln

MwRSF Research Report No. TRP-03-40-94

DISCLAIMER STATEMENT

The contents of this report reflect the views of the authors who are responsible for the facts and the accuracy of the data presented herein. The contents do not necessarily reflect the official views or policies of the Missouri Highway and Transportation Department nor the Federal Highway Administration. This report does not constitute a standard, specification, or regulation.

ACKNOWLEDGEMENTS

The authors wish to express their appreciation and thanks to the members of the Midwest States Regional Pooled Fund Program for funding the research described herein and the Center for Infrastructure Research for providing matching support. A special thanks is also given to the following individuals who made a contribution to the completion of this research project.

Midwest Roadside Safety Facility

Ron Faller and Brian Pfeifer, Research Associate Engineers
Ken Krenk, Field Operations Manager

Missouri Department of Transportation

Pat McDaniel, Special Assignments Design Engineer

Nebraska Department of Roads

Leona Kolbet, Research Coordinator
Larry Brown, Chairman - Pooled Fund Program

Kansas Department of Transportation

Ron Seitz, Road Design Squad Leader

Center for Infrastructure Research

Maher Tadros, Ph.D., Director

Federal Highway Administration

Milo Cress, Bridge Engineer, Nebraska Division Office

ABSTRACT

One full-scale vehicle crash test was performed on Missouri's 6-in. barrier curb under W-beam guardrail. Test MO6C-1 was conducted with a 4500 lb test vehicle with target impact conditions of 60 mph and 25 deg. The potential safety performance degradation of using a 6-in. barrier curb under a standard G4(1S) W-beam guardrail installation was evaluated to determine the effects of the curb on vehicle stability during a redirective guardrail impact test.

The test was conducted and reported in accordance with the requirements specified in the *Recommended Procedures for the Safety Performance Evaluation of Highway Appurtenances*, National Cooperative Highway Research Program (NCHRP) Report No. 230. The safety performance of Missouri's 6-in. barrier curb under W-beam guardrail was determined to be acceptable according to the NCHRP 230 criteria.

TABLE OF CONTENTS

Page

DISCLAIMER STATEMENT i

ACKNOWLEDGEMENTS ii

ABSTRACT iii

TABLE OF CONTENTS iv

LIST OF FIGURES v

LIST OF TABLES vi

1 INTRODUCTION 1
- 1.1 Problem Statement 1
- 1.2 Objective 1

2 TEST CONDITIONS 2
- 2.1 Test Facility 2
- 2.2 Tow and Guidance System 2
- 2.3 Test Installation 2
- 2.4 Test Vehicle 6
- 2.5 Data Acquisition Systems 6

3 PERFORMANCE EVALUATION CRITERIA 15

4 TEST RESULTS 16
- 4.1 Test Parameters 16
- 4.2 Test Description 16
- 4.3 Vehicle Damage 23
- 4.4 Installation Damage 23
- 4.5 Occupant Risk Data 34
- 4.6 Previous Test Results 34

5 CONCLUSIONS 39

6 REFERENCES 40

7 APPENDICES 41
- 7.1 APPENDIX A: MO6C-1 Data Analysis Plots 42

LIST OF FIGURES

Page

1. Test Installation Layout 3
2. Test Installation Design Details 4
3. 6-in. Barrier Curb Details 7
4. Test Vehicle 8
5. Test Vehicle Dimensions 9
6. Test Vehicle Target Locations 10
7. High-Speed Camera Layout 12
8. Data Acquisition Flowchart 14
9. Impact Location 17
10. Summary of Test Results, MO6C-1 18
11. Sequential Photographs 19
12. Full-Scale Crash Test 20
13. Full-Scale Crash Test (continued) 21
14. Full-Scale Crash Test (continued) 22
15. Test Vehicle Damage 24
16. Test Vehicle Damage (continued) 25
17. W-beam Guardrail Damage 26
18. W-beam Guardrail Damage (continued) 27
19. Permanent Set Post and Rail Deflections 28
20. Dynamic Post and Rail Deflections 29
21. Barrier and Post Permanent Deformation Near Post Nos. 12 and 13 30
22. Barrier and Post Permanent Deformation Near Post Nos. 14 and 15 31
23. Barrier and Post Permanent Deformation Near Post Nos. 16 and 17 32
24. Barrier and Post Permanent Deformation Near Post No. 18 33
25. AASHTO Mountable and Barrier Curb Types 36

LIST OF TABLES

Page

1. NCHRP Report 230 Test Designation 10 and S13 Required Evaluation Criteria 15
2. G4(1S) Curb/Guardrail Test Results 35
3. Comparison of Test Results (KSWB-1 and MO6C-1) 38

1 INTRODUCTION

1.1 Problem Statement

The performance of curb/guardrail combinations has been a concern to highway engineers for many years. It was often assumed that a curb used in conjunction with a W-beam guardrail installation was acceptable as long as the front face of the curb was at least flush with the front face of the W-beam. However, full-scale crash tests have shown that the curb/guardrail combination may indeed reduce the effectiveness of the guardrail system to contain and redirect an impacting vehicle (1). Generally, a standard semi-rigid guardrail system deflects enough upon impact, at relatively severe impact conditions, to allow a vehicle's wheel to mount the curb under the guardrail, causing uplift to the vehicle and potential vaulting of the guardrail. Therefore continued use of any curb/guardrail combinations should be discouraged where severe impacts may occur unless the specific test article is successfully crash tested (1).

1.2 Objective

The objective of this study was to conduct a full-scale crash test evaluation in accordance with the *Recommended Procedures for the Safety Performance Evaluation of Highway Appurtenances*, National Cooperative Highway Research Program (NCHRP) Report No. 230 (2), on Missouri's 6-in. barrier curb under G4(1S) W-beam guardrail. The test program will determine the adequacy of Missouri's existing curb/guardrail installations and allow for improvement recommendations to be made if necessary. The testing could lead to the continued use of the standard design, providing a substantial cost savings for the state of Missouri.

2 TEST CONDITIONS

2.1 Test Facility

The Midwest Roadside Safety Facility's outdoor test site is located at the Lincoln Air-Park on the northwest end of the Lincoln Municipal Airport. The test facility is approximately 5 mi. northwest of the University of Nebraska-Lincoln. The site is surrounded and protected by an 8-ft high chain-link security fence. This testing was conducted on the north end of the facility, which is designated for longitudinal installations constructed in soil.

2.2 Vehicle Tow and Guidance System

A reverse cable tow system with a 1:2 mechanical advantage was used to propel the test vehicle. The distance traveled and the speed of the tow vehicle are one-half that of the test vehicle. The test vehicle was released from the tow cable before impact with the bridge rail. A fifth wheel, built by the Nucleus Corporation, was used in conjunction with a digital speedometer to increase the accuracy of the test vehicle impact speed.

A vehicle guidance system developed by Hinch (3) was used to steer the test vehicle. The guide-flag, attached to the front-left wheel and the guide cable, was sheared off before impact. The ⅜ -in. diameter guide cable was tensioned to approximately 3,000 lbs, and supported laterally and vertically every 100 ft by hinged stanchions. The vehicle guidance cable was approximately 1,500 ft long.

2.3 Test Installation

An overall layout of the test installation is shown in Figure 1, with design details shown in Figure 2. The test installation consisted of 175 ft (seven- 25 ft sections) of single 12 gauge W-beam guardrail. The total installation was constructed with twenty-five steel posts and four wood posts. The post spacing over the entire length of the installation was 6 ft - 3 in. on center.

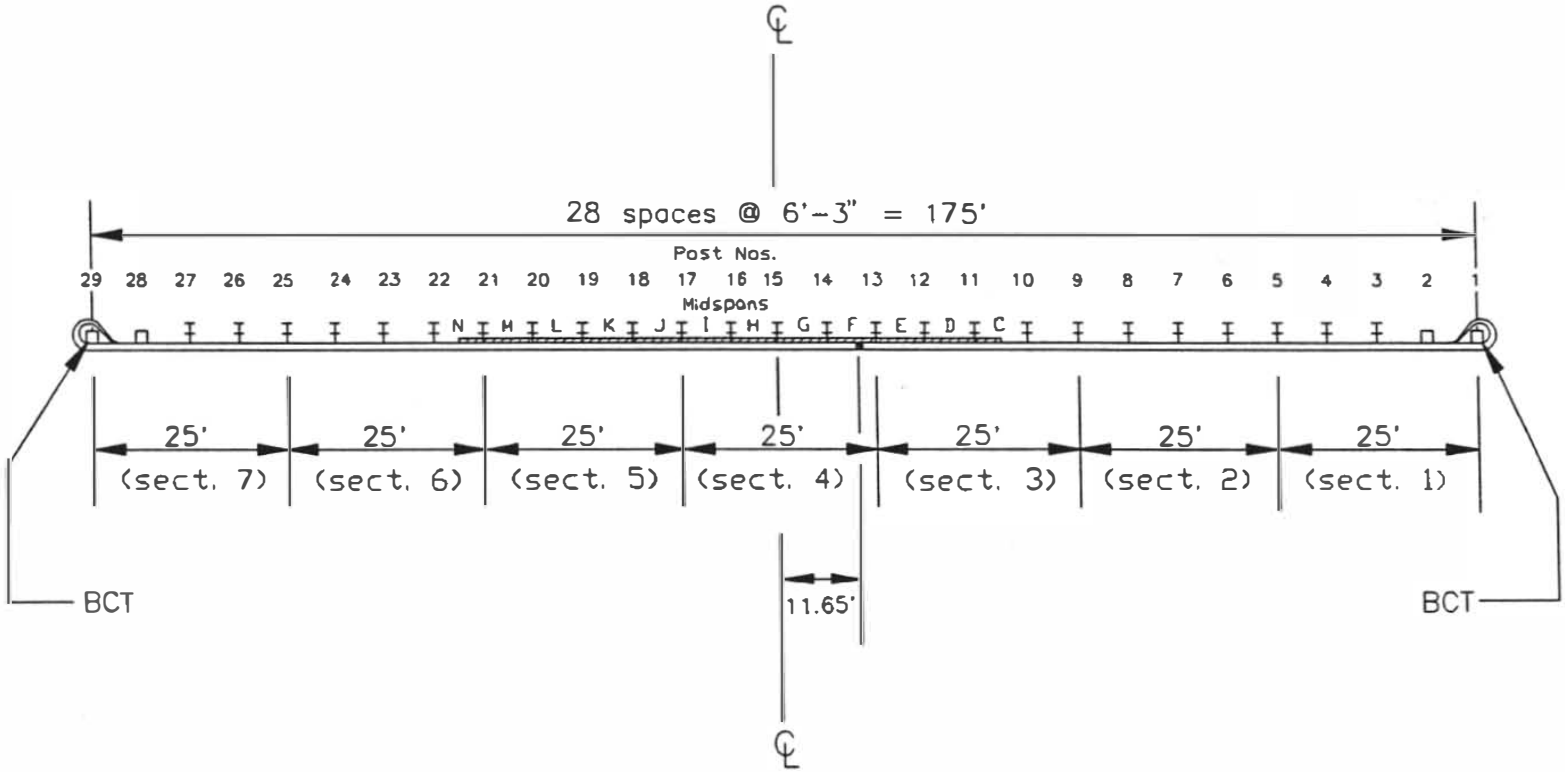

Figure 1. Test Installation Layout

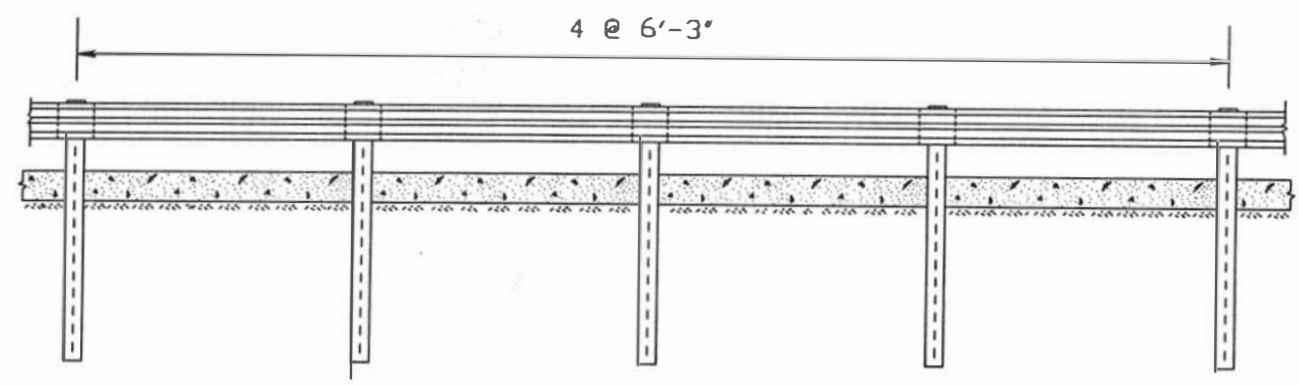

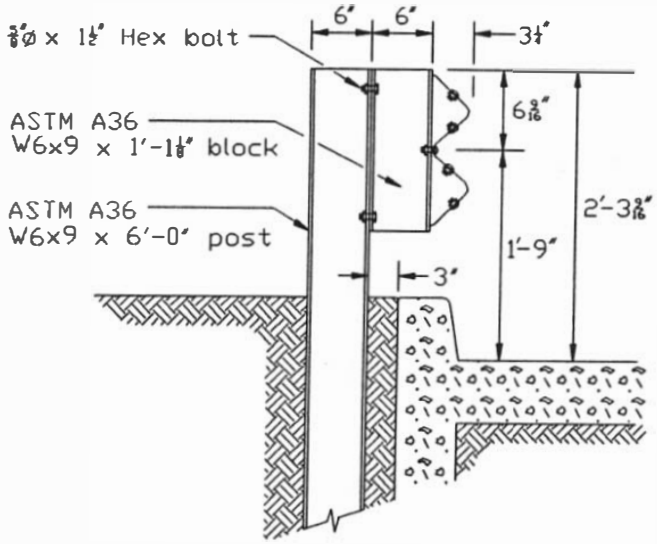

Figure 2. Test Installation Design Details

Post Nos. 3 through 27 consisted of W6 x 9 by 6-ft long steel posts with W6 x 9 steel spacer blocks, while Post Nos. 1, 2, 28, and 29 consisted of 5½-in. x 7½-in. x 3-ft 6½-in. wood breakaway posts. The total length of the guardrail had a top mounting height of 2 ft - 3 in. The W-beam guardrail was anchored on both ends with a standard breakaway cable terminal (BCT). Steel backup plates were placed between the guardrail and the posts at all non-splice locations, as specified by Missouri's design specifications (4).

The breakaway posts were drilled with a 2 ⅜ -in. diameter hole at a location 25 in. below the top of the post and perpendicular to the 7½-in. face and were placed in steel foundation tubes. The steel posts were driven into a compacted silty-clay topsoil material with a power hammer. This material was used in order to evaluate the system's performance in soil conditions typically encountered along Missouri highways. Note that these soil conditions are not in conformance with either the strong soil (S-1) or the weak soil (S-2) defined in NCHRP 230 (2). Prior to full-scale crash testing, the soil conditions, from a visual inspection, were found to be dry and crumbly at a depth of 1 to 2 ft. The average moisture content of the soil within this depth was 19.2 percent.

The wood posts were set in augered holes of sufficient size to permit thorough compacting of the backfill material. The backfill material for the wood posts was dry sand placed in layers not exceeding 12 in. The sand backfill was compacted by flooding and the final 12 in. of backfill was native earth material and was placed and compacted in two 6 in. lifts.

The total length of concrete curb constructed underneath the W-beam guardrail was approximately 70 ft, beginning at Midspan C and ending at Midspan N, as shown in Figure 1. The curb was constructed such that the front face of the curb and the front face of the guardrail were in the same vertical plane, as shown in Figure 2. The curb, (Type A Integral Barrier

Curb) (4), had an overall height and width of 6 in., and had a 1 in. offset between the bottom and top of the front face, with a ¾ in. radius on the top front face and a ¼ in. radius on the top of the back face. The details on the curb are shown in Figure 3. The concrete compressive strength of the curb at the time of the testing was 6500 psi. A 2-ft wide concrete slab was constructed in front of the curb to provide resistance to movement of the curb during impact.

2.4 Test Vehicle

A 1985 Ford LTD, shown in Figure 4, was used as the test vehicle. Vehicle parameters, including dimensions and weights are shown in Figure 5. Targets, used to determine vehicle motions from the high speed film, were placed on the vehicle as shown in Figure 6. The front wheels of the test vehicles were aligned for camber, caster, and toe-in values of zero so that the vehicle would track properly along the guide cable. Two 5B flash bulbs, fired by a pressure tape switch on the front bumper, were mounted on the roof of the vehicle to establish the time of impact on the high-speed film.

The Elevated Axle Method (5) was used to determine the vertical component of the center of gravity of each of the vehicles. This method converts measured wheel weights at different elevations to the location of the vertical component of the center of gravity. The longitudinal component of the center of gravity was determined using the measured axle weights. Ballast consisted of steel plates rigidly attached to the floor near the vehicle's vertical center of gravity.

2.5 Data Acquisition Systems

Vehicle reactions during the full-scale testing program were monitored through video and high-speed photography, accelerometers, rate gyro, and tape pressure switches. Each of these components of the data acquisition system are described as follows.

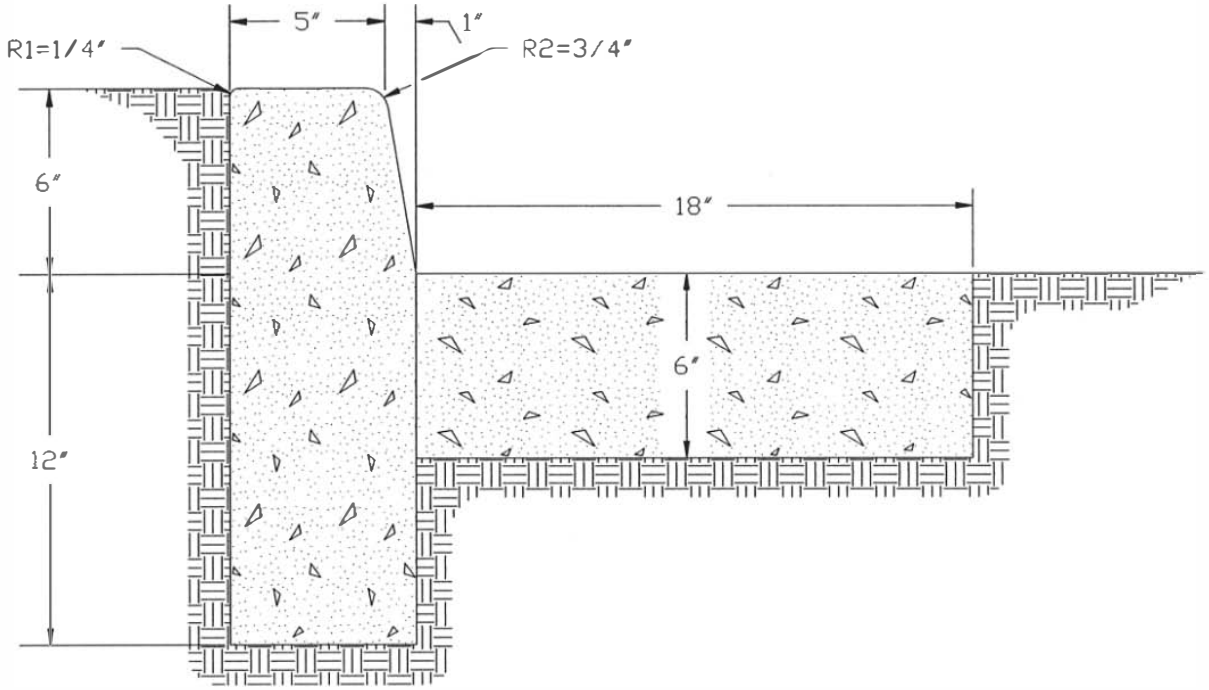

Figure 3. 6-in. Barrier Curb Details

Figure 4. Test Vehicle

Date: 10/6/93 Test No.: M06C-1 Year: 1985

Make: Ford Vehicle I.D.#: 2FABP43F6FX188308

Tire Size: P215/75R14 Model: Crown Victoria

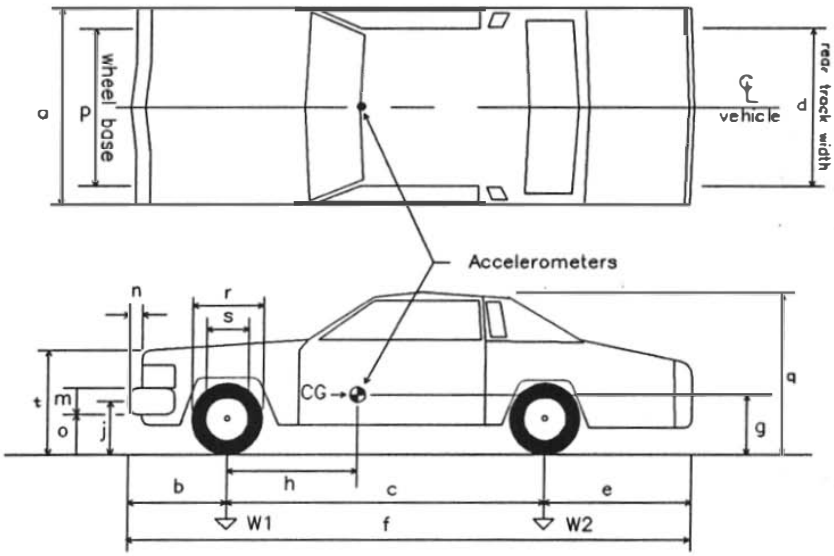

Vehicle Geometry
Inches

a —	76.5	b —	37
c —	114	d —	55.5
e —	54	f —	205
g —	23.5	h —	51.5
j —	17.5	m —	6.5
n —	4	o —	14
p —	62.5	q —	NA
r —	26	s —	15.25
t —	31		

Engine Type: 8 cyl.

Engine Size: 302 ci.

Transmission Type: automatic

Weight — pounds	Curb	Test Inertial	Gross Static
W1	2128	2473	2473
W2	1430	2027	2027
Wtotal	3558	4500	4500

Damage prior to test: none

Figure 5. Test Vehicle Dimensions

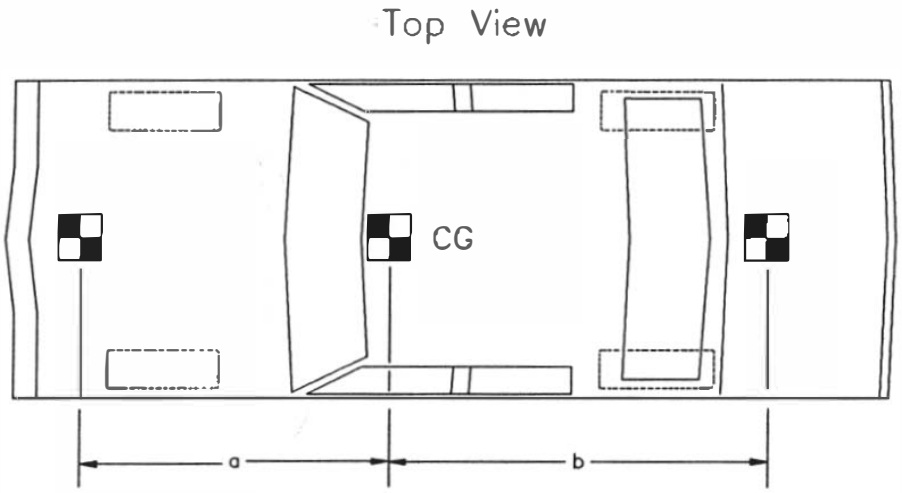

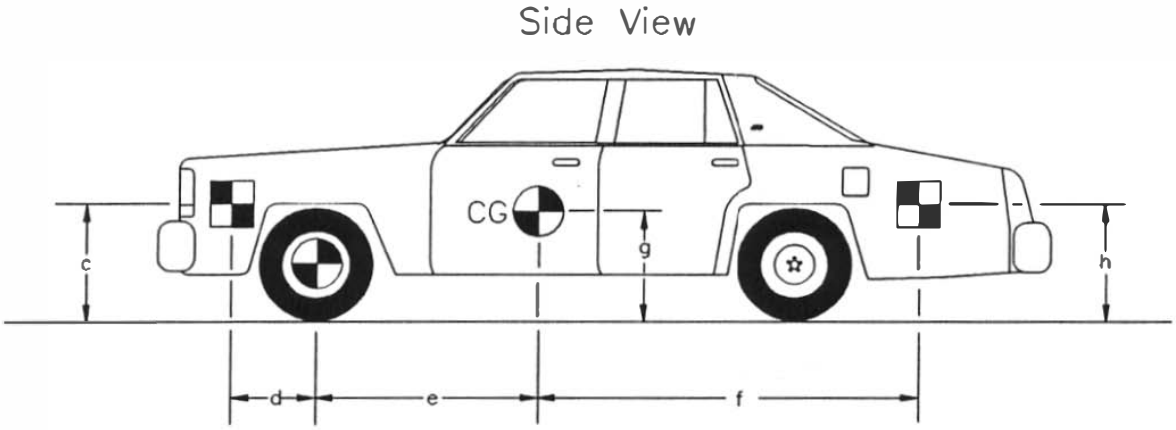

Test# M□6C-1

TARGET GEOMETRY
INCHES

a 51.5	c 32	e 51.5	g 23.5
b 96	d NA	f 96	h 32

Figure 6. Test Vehicle Target Locations

High Speed Photography

Four high-speed 16-mm cameras (500 frames/sec), one high-speed 16mm documentary camera (64 frames/sec), two documentary VHS cameras, and a high speed 35mm camera were used to film the full-scale tests. Schematics of the camera layouts are shown in Figure 7. A Red Lake Locam with a 12.5 mm lens was placed above the test installation to provide a field of view perpendicular to the ground. Another Red Lake Locam with a 76-mm lens was placed downstream from the impact point and had a field of view parallel to the guardrail. A Photec IV, with a 80-mm lens, was also placed downstream from the impact point. A Photec IV, with a 55-mm lens, was placed on the traffic side of the guardrail and had a field of view perpendicular to the barrier. The high-speed documentary 16-mm camera was used to provide a panning view of the tests. Visible reference systems were placed in the fields of view to use in the analysis of the high-speed film. The film was analyzed using a Vanguard Motion Analyzer, and all camera divergence effects were properly accounted for.

Accelerometers

Endevco triaxial piezoresistive accelerometers (Model 7264) with a range of $\pm$ 200 g's were used to measure the accelerations in the longitudinal, lateral, and vertical directions of the test vehicle.

Rate Gyro

A Humphrey 3-axis rate transducer with a range of 250 deg/sec in each of the three directions (pitch, roll and yaw) was used to measure the rotational rates of the test vehicle. Vehicle rotations become coupled in the presence of high rotation rates, therefore the uncoupled angular velocities were reported where applicable.

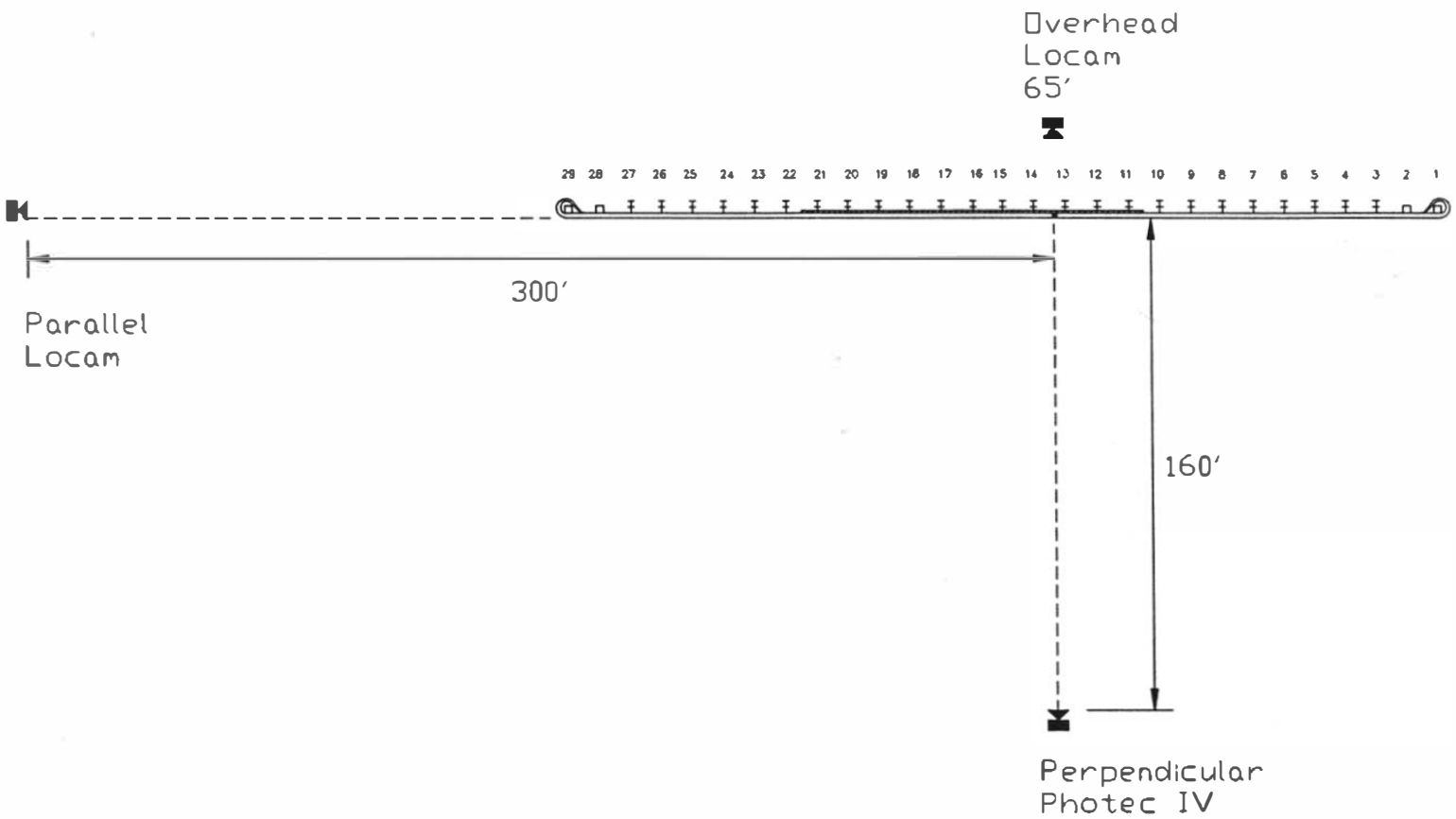

Figure 7. High Speed Camera Layout

Both the accelerometers and rate gyro transducers were rigidly attached to the vehicle near the center of gravity of the test vehicle. Signals from the transducers were received and conditioned by an onboard Metraplex unit where the signals were multiplexed and then transmitted by the radio telemetry to a Honeywell (101) Analog Tape Recorder in the control van. The data acquisition flowchart is shown in Figure 8. State-of-the-art computer software, "Enhanced Graphics Acquisition and Analysis" (EGAA) (6) was used to acquire the rate gyro data and "Data Analysis and Display Software" (DADiSP) (7) was to analyze and plot the data. The software was also used to conduct low pass filtering and smoothing operations to eliminate high frequency noise from the experimental data.

Tape Pressure Switches

Tape pressure switches spaced at 5-ft intervals were used to determine the actual speed of the vehicle before impact. Each tape switch triggered a strobe light located near each switch as the left front tire of the test vehicle passed over it. The average speed of the test vehicle between the tape switches was determined by knowing the distance between the tape switches, the calibrated camera speed, and the number of frames between flashes from the high-speed film. The average speed was also determined from electronic timing mark data which was transmitted through fiber optic cable and recorded on oscilloscope software.

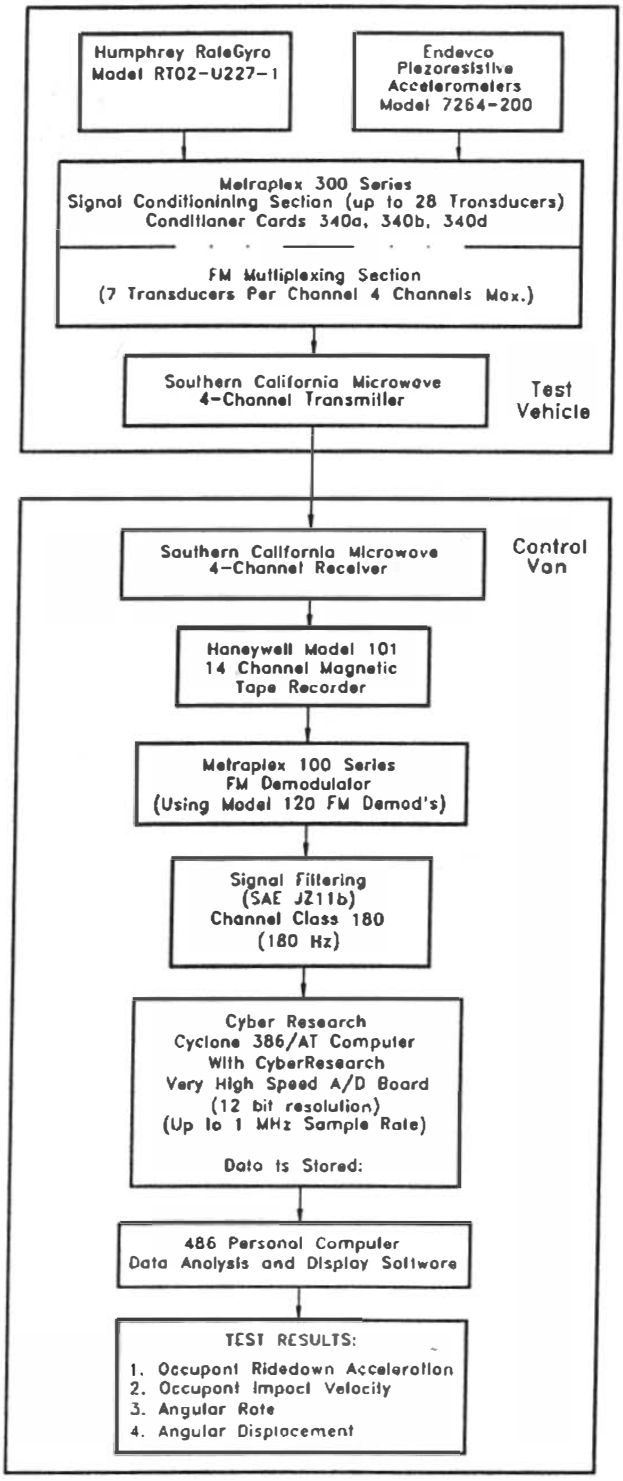

Figure 8. Data Acquisition Flowchart

3 PERFORMANCE EVALUATION CRITERIA

Longitudinal guardrail installations must satisfy the requirements provided in NCHRP Report No. 230 (2) in order to be accepted for use on new construction projects or as a replacement for existing installations. The Missouri curb/guardrail installation must satisfy the requirements from one full-scale vehicle crash test (Test Designation 10), and also the requirements of a supplemental test (Test Designation S13). The required evaluation criteria are shown in Table 1. The three evaluation criteria categories are further defined and explained in NCHRP 230. The testing was conducted and reported in accordance with the procedures provided in NCHRP 230. The vehicle damage was assessed by the traffic accident scale (TAD)(8) and the vehicle damage index (VDI) (9).

Table 1. NCHRP Report 230 Test Designation 10 and S13 Required Evaluation Criteria

Structural Adequacy	A. Test article shall smoothly redirect the vehicle; the vehicle shall not penetrate or go over the installation although controlled lateral deflection of the test article is acceptable.
	D. Detached elements, fragments or other debris from the test article shall not penetrate or show potential for penetrating the passenger compartment or present undue hazard to other traffic.
Occupant Risk	E. The vehicle shall remain upright during and after collision although moderate roll, pitching and yawing are acceptable. Integrity of the passenger compartment must be maintained with essentially no deformation or intrusion.
Vehicle Trajectory	H. After collision, vehicle trajectory and final stopping position shall intrude a minimum distance, if at all, into adjacent traffic lanes.
	I. In test where the vehicle is judged to be redirected into or stopped while in adjacent traffic lanes, vehicle speed change during test article collision should be less than 15 mph and the exit angle from the test article should be less than 60 percent of the test impact angle, both measured at time of vehicle loss of contact with test device.

4 TEST RESULTS

4.1 Test Parameters

Test MO6C-1 was conducted with a 1985 Ford LTD weighing 4,500-lbs at an impact speed of 59.7 mph and impact angle of 25.1 degrees at a location approximately 11.7 ft upstream of the system's center (Post No. 15). The location of impact is shown in Figure 9. The test installation was G4(1S) system consisting of single 12-gauge W-beam at 6 ft - 3 in. post spacing with a 6-in. barrier curb (Type A Integral) (4), placed flush with the guardrail front face. A summary of the test results and sequential photographs are presented in Figure 10. Additional sequential photographs are shown in Figure 11. Documentary photographs of the crash test are shown in Figures 12 through 14.

4.2 Test Description

A brief discussion of the impact sequence of events is presented as follows. The right front tire contacted the front face of the curb at approximately 20 msec after the initial impact with the guardrail. The right front tire mounted the curb at 51 msec, near Post No. 14. The right rear tire contacted the 2-ft concrete surface at 122 msec and mounted the curb at 163 msec, where the vehicle simultaneously reached its maximum roll angle of approximately 14 degrees. The vehicle became parallel with the rail at approximately 213 msec. The vehicle's right front and rear tires dismounted the curb at approximately 406 msec and 609 msec, respectively. The vehicle progressed along the rail and lost contact at approximately 706 msec with an exit speed and angle of 40 mph and 6.2 degrees, respectively. The vehicle obtained a maximum rebound distance of 10.8 ft at 1.016 sec, followed by a redirection toward the rail and a secondary impact with the installation at 1.879 sec near the first downstream timber post (Post No. 28). As shown in Figure 6, the vehicle came to rest approximately 120 ft downstream from the initial impact.

Figure 9. Impact Location

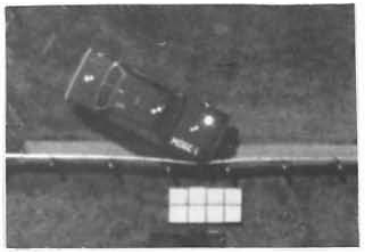

0.020-sec.

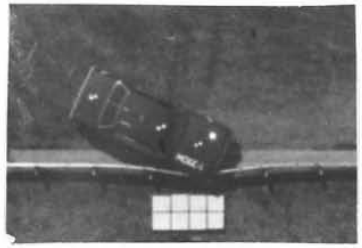

0.051-sec.

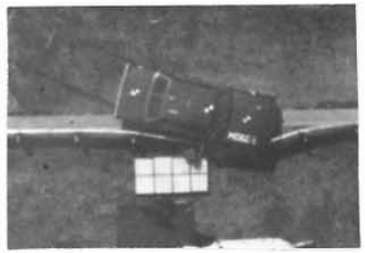

0.163-sec.

0.213-sec.

0.406-sec.

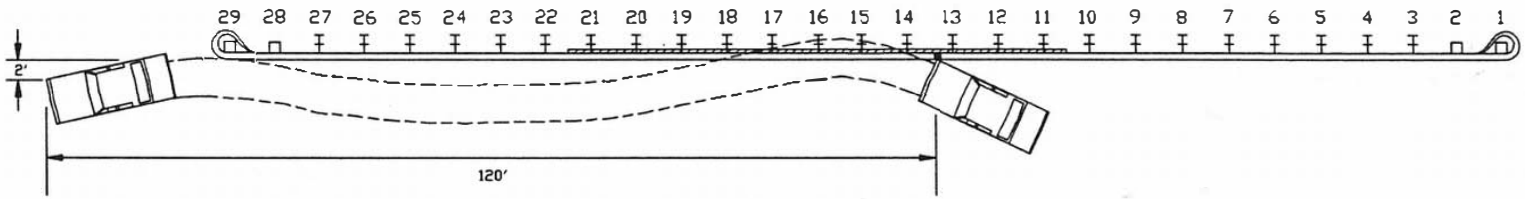

Test Number MO6C-1
Date 10/6/93
Installation . . . . . Single 12-Gauge W-Beam with 6 ft-3 in. Post Spacing over a 6 -in. Barrier Curb
Installation Length . . . . . 175 ft
Post
  Size W6x9
  Length . . . . . 6 ft
Guardrail
  Material . . . . . 7 - 25 ft sections of 12 gauge W-beam
Curb Type . . . . . 6-in. Barrier Curb
End Treatments . . . . . Breakaway Cable Terminals
Test Vehicle . . . . . 1985 Ford LTD
  Test Inertial Weight . . . . . 4500 lbs
  Gross Static Weight . . . . . 4500 lbs

Impact Speed . . . . . 59.7 mph
Impact Angle . . . . . 25.1 deg
Impact Location . . . . . 11.7 ft Upstream of Post No. 15
Exit Speed . . . . . 40.0 mph
Exit Angle . . . . . 6.2 deg
Normalized Occupant Impact Velocity
  Longitudinal . . . . . 18.6 fps
  Lateral . . . . . 15.8 fps
Occupant Ridedown Deceleration
  Longitudinal . . . . . 3.2 g's
  Lateral . . . . . 8.5 g's
Vehicle Damage
  TAD 1-RFQ-3, 1-RD-2
  VDI 01RDES2
Maximum Permanent Set Deflection . . . . . 30.1 in. @ Post No. 15
Maximum Dynamic Deflection . . . . . 31.7 in. @ Post No. 15
Vehicle Rebound Distance . . . . . 10.8 ft

FIGURE 10. Summary of Test Results, MO6C-1

0.000-sec.

0.020-sec.

0.051-sec.

0.122-sec.

0.142-sec.

0.163-sec.

0.231-sec.

0.315-sec.

0.406-sec.

0.609-sec.

0.706-sec.

1.016-sec.

1.879-sec

2.366-sec.

Figure 11. Sequential Photographs

Figure 12. Full-Scale Crash Test

Figure 13. Full-Scale Crash Test (continued)

Figure 14. Full-Scale Crash Test (continued)

4.3 Vehicle Damage

Vehicle damage is shown in Figures 15 and 16, and consisted primarily of right front corner crushing, including tire blowout and rim damage, and passenger side W-beam interlock damage. The right rear rim was slightly deformed, but the tire was not deflated. There was no interior occupant compartment damage detected.

4.4 Installation Damage

The W-beam guardrail damage is shown in Figures 17 and 18. Four 25-ft sections of guardrail were damaged during the test; the target impact section (section 4), the ends of the sections upstream and downstream of the target section (sections 3 and 5), and the section that was impacted during the secondary impact (section 7). The measured contact length between the vehicle and the rail (impact to Post No. 18) was approximately 30 ft. The permanent set and maximum dynamic deflections were 30.1 and 31.7 in., respectively. Maximum guardrail and post permanent set and dynamic deflections are shown in Figures 19 and 20, respectively.

Guardrail and post damage at Post Nos. 12 and 13 are shown in Figure 21. Post Nos. 14 and 15 were disengaged during the test as shown in Figure 22. Post No. 16 was also disengaged during the test as shown in Figure 23. The end of the contact length occurring at Post No. 18 is shown in Figure 24. There was no permanent set twist or bending to the disengaged posts or any of the other posts as a result of the impact. There was no observed vehicle contact with the posts due to the wheel underriding the guardrail and contacting the posts. The damage to the concrete curb consisted of only a 3-ft long tire mark beginning 7 in. downstream of impact and a 2-in. long concrete gouge located approximately 16 in. downstream of the impact point.

Figure 15. Test Vehicle Damage

Figure 16. Test Vehicle Damage (continued)

Figure 17. W-Beam Guardrail Damage

Figure 18. W-Beam Guardrail Damage (continued)

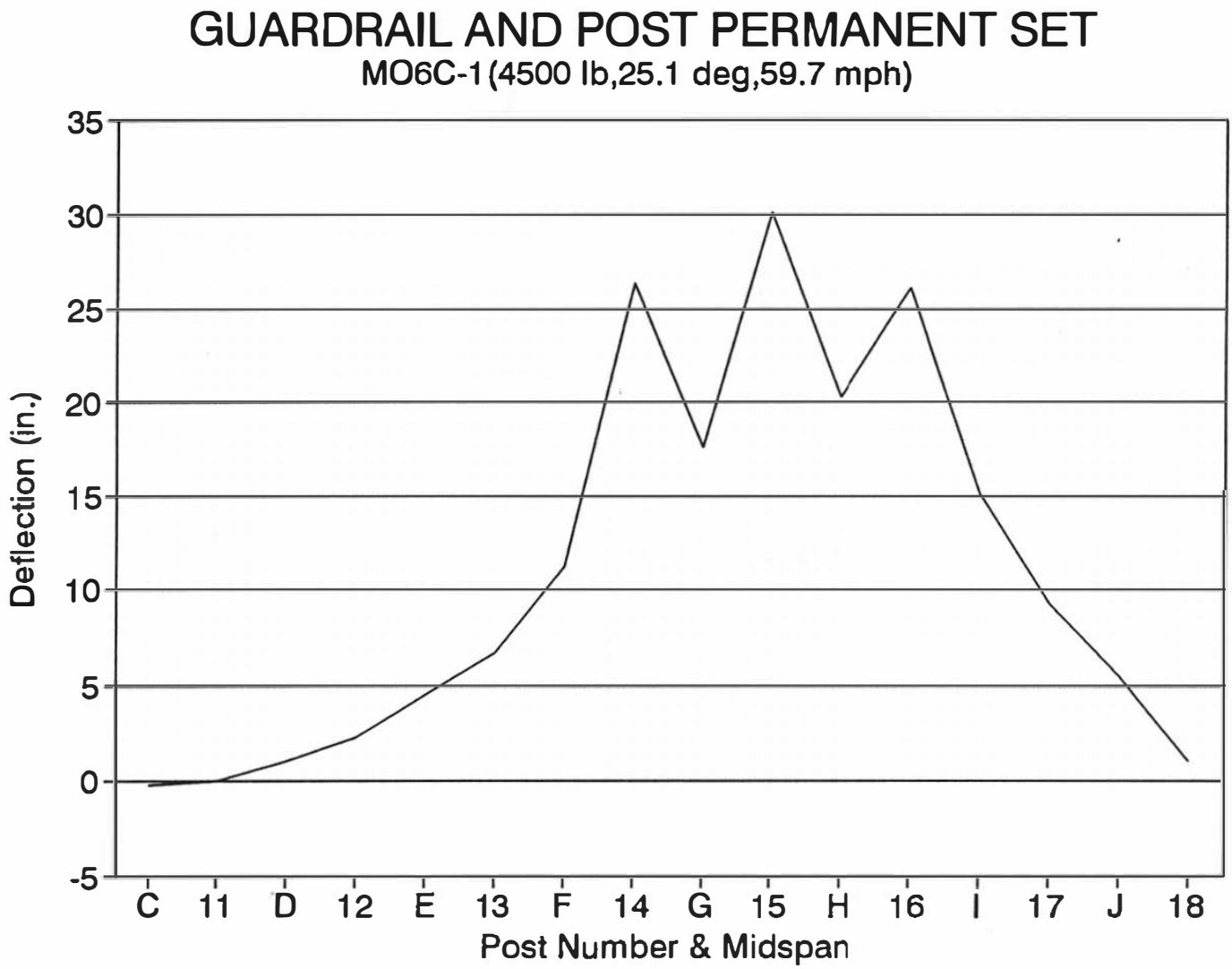

Figure 19. Permanent Set Post and Rail Deflections

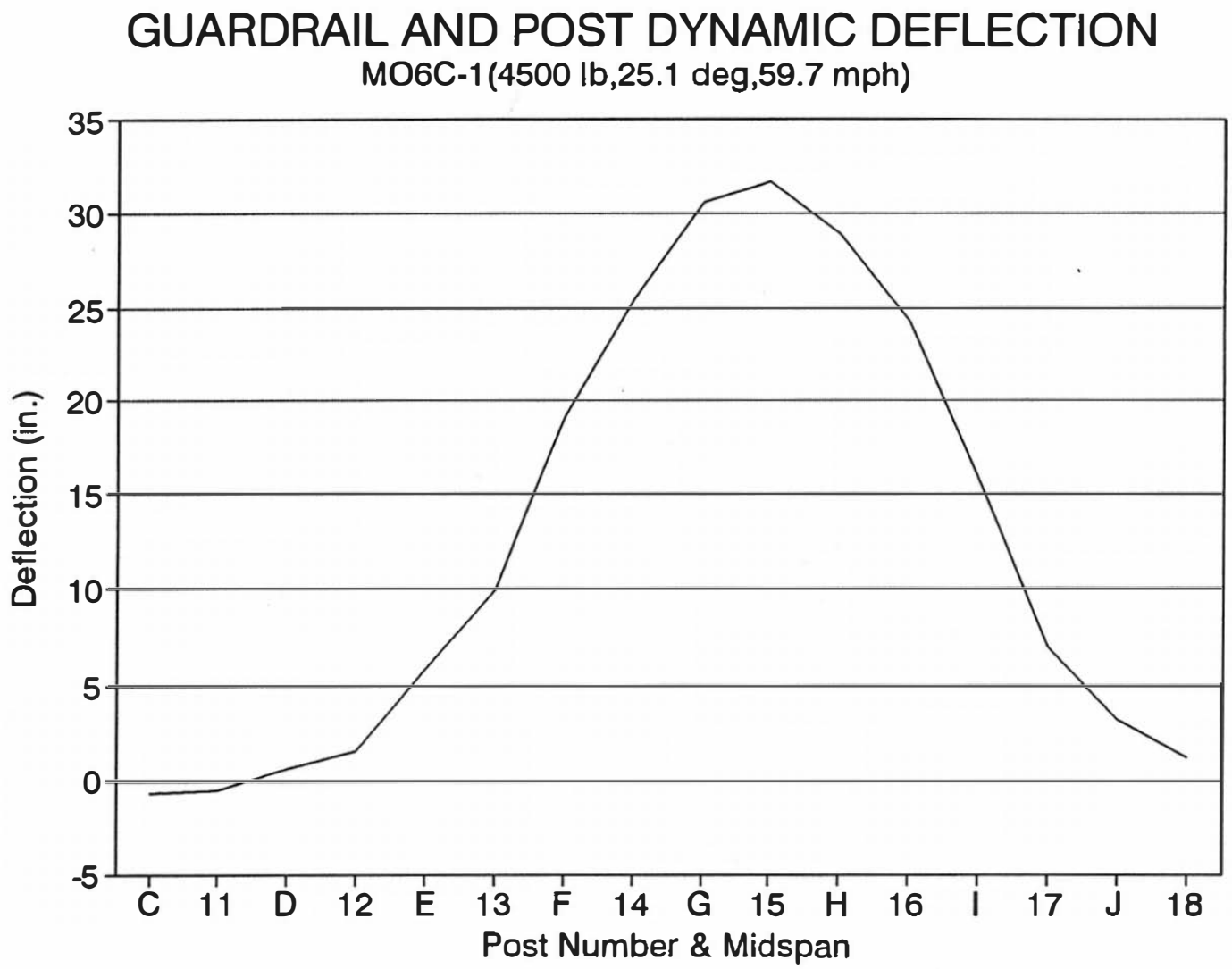

Figure 20. Dynamic Post and Rail Deflections

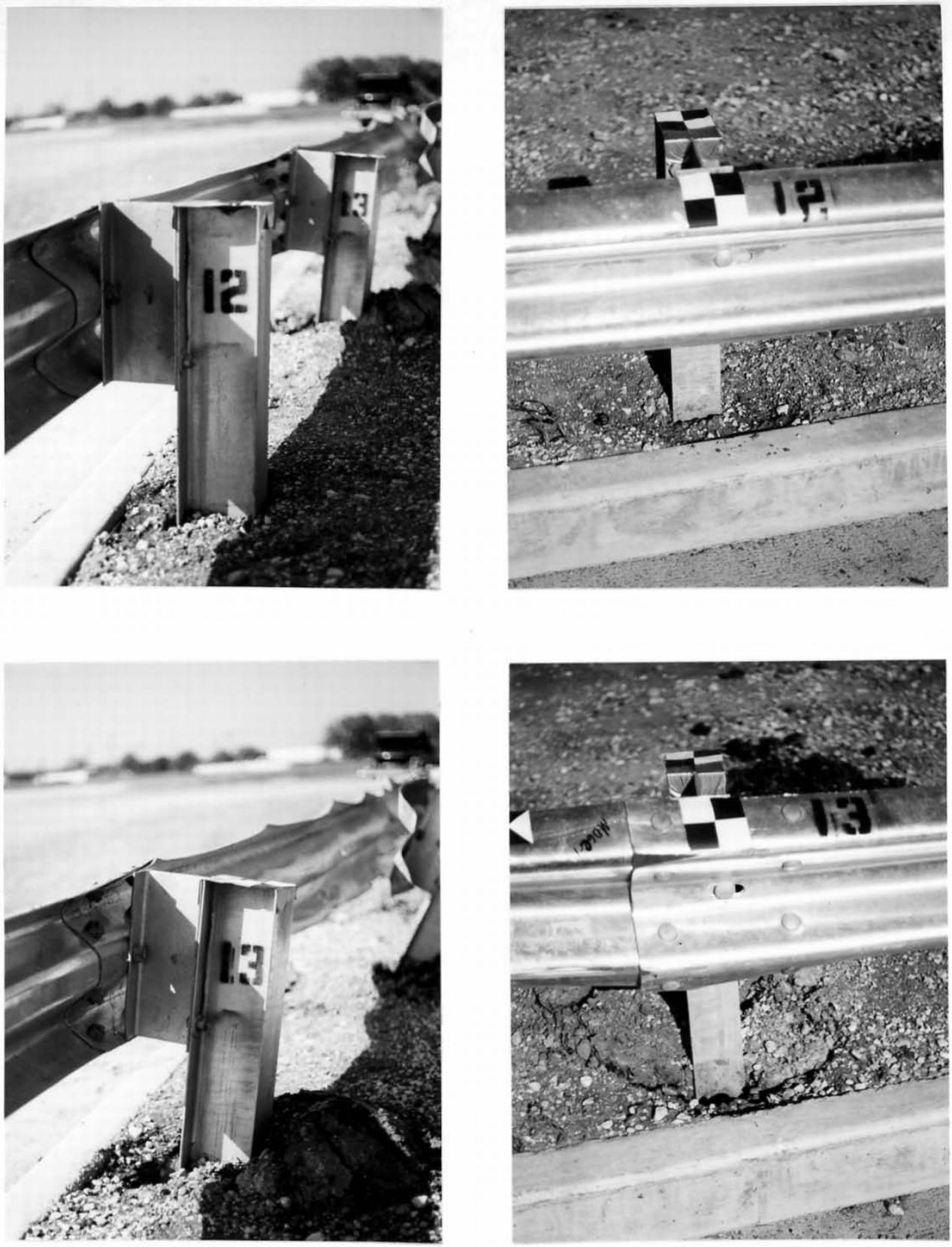

Figure 21. Barrier and Post Permanent Deformation Near Post Nos. 12 and 13

Figure 22. Barrier and Post Permanent Deformation Near Post Nos. 14 and 15

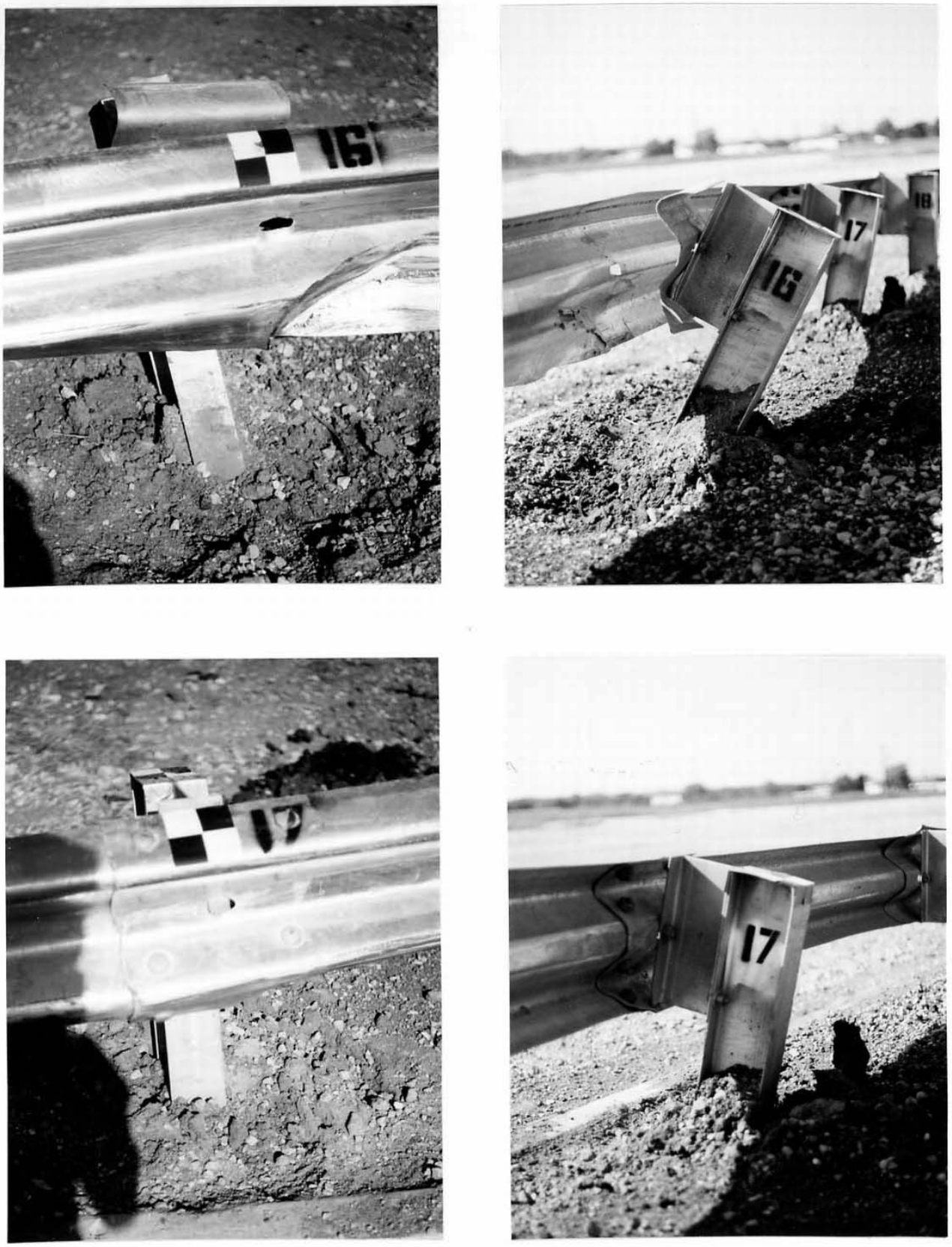

Figure 23. Barrier and Post Permanent Deformation Near Post Nos. 16 and 17

Figure 24. Barrier and Post Permanent Deformation Near Post No. 18

4.5 Occupant Risk Data

The normalized longitudinal and lateral occupant impact velocities were determined to be 18.6 fps and 15.8 fps, respectively. The highest average occupant ridedown decelerations in the longitudinal and lateral directions were 3.2 g's and 8.5 g's, respectively. The results of the occupant risk, determined from film analysis, are summarized in Figure 9. The results are also shown graphically in Appendix A. The occupant impact velocities and ridedown decelerations were considerably less than the recommended limits set forth by NCHRP 230. These limits are 30 fps and 20 fps for the longitudinal and lateral occupant impact velocities, respectively and 15 g's for the ridedown decelerations.

4.6 Results of Previous Testing

Results from a test program conducted to study the effects of using curbs under standard G4(1S) guardrail systems are shown in Table 2 (1), and the referenced curbs are shown in Figure 25. Vehicle vaulting occurred on Test Nos. 1862-1-88 and 1862-5-89. This occurred due to the excessive deflection of the guardrail thus allowing the wheels to impact the curb, causing compression of the suspension system and producing sufficient upward forces to cause the vehicle to vault over the guardrail. In Test 1862-4-89 the curb/guardrail combination successfully redirected the vehicle due to the relatively small guardrail deflections not allowing for the wheels to contact the curb. Test 1862-12-90 was conducted to evaluate the effects of lowering the curb height to 4 in. The results showed the vehicle became airborne, although it was contained. This test showed that reducing the curb height was one solution to the prevention of vaulting, however stiffening the guardrail to reduce the deflection may be a better approach as demonstrated in the test results of Test Nos. 1862-13-91 and 1862-14-91. Test No. 1862-13-91 was conducted on a curb/guardrail system which was stiffened by bolting an extra

Table 2. G4(1S) Curb/Guardrail Test Results

TEST PARAMETER	1862-1-88[1]	1862-4-89[1]	1862-5-89[1]	1862-12-90[1]	1862-13-91[1]	1862-14-91[1]
Test Vehicle Type	1982 C20 Chevy Pickup	1982 Honda Civic	1980 Plymouth Gran Fury	1980 Chrysler Newport	1979 Chrysler Newport	1981 Plymouth Gran Fury
Test Vehicle Gross Weight (lb)	5742	1946	4625	4645	4679	4700
Impact Angle (deg)	20.0	20.0	25.0	25.0	26.0	25.0
Impact Speed (mph)	61.3	62.2	60.3	61.6	61.4	62.1
Installation Type	G4(1S)	G4(1S)	G4(1S)	G4(1S)	StiffenedG4(1S) with W-beam	G4(1S)with channel rub rail
Curb Type[2]	8-in. AASHTO IV-4A	6-in. AASHTO IV-4F	6-in. AASHTO IV-4F	4-in. ASSHTO IV-4G	6-in. AASHTO IV-4F	6-in. AASHTO IV-4F
Curb Placement	Flush with guardrail face	Flush with guardrail face	Flush with guardrail face	In Front of guardrail face	Flush with guardrail face	Flush with guardrail face
Exit Angle (deg) and Speed (mph)	NA/NA	6.0/45.5	5.0/39.8	3.0/38.3	10.0/33.1	9.0/45.7
Long. OIV(fps) andRidedown Accel(g's)	16.3/2.9	22.8/2.4	21.7/4.7	21.1/5.4	26.4/9.2	18.8/4.0
Lateral OIV(fps) andRidedown Accel(g's)	10.2/5.5	23.7/12.5	17.2/9.8	14.8/10.0	18.3/8.8	16.9/9.4
Test Results Conclusion According to NCHRP 230 (2) Criteria	Test Article Failed due to Vaulting	Meets All Criteria	Vaulting Occurred but Criteria Met	Meets All Criteria	Meets All Criteria	Meets All Criteria

[1] ENSCO (1)
[2] AASHTO (10)
NA - Not Available
OIV - Occupant Impact Velocity

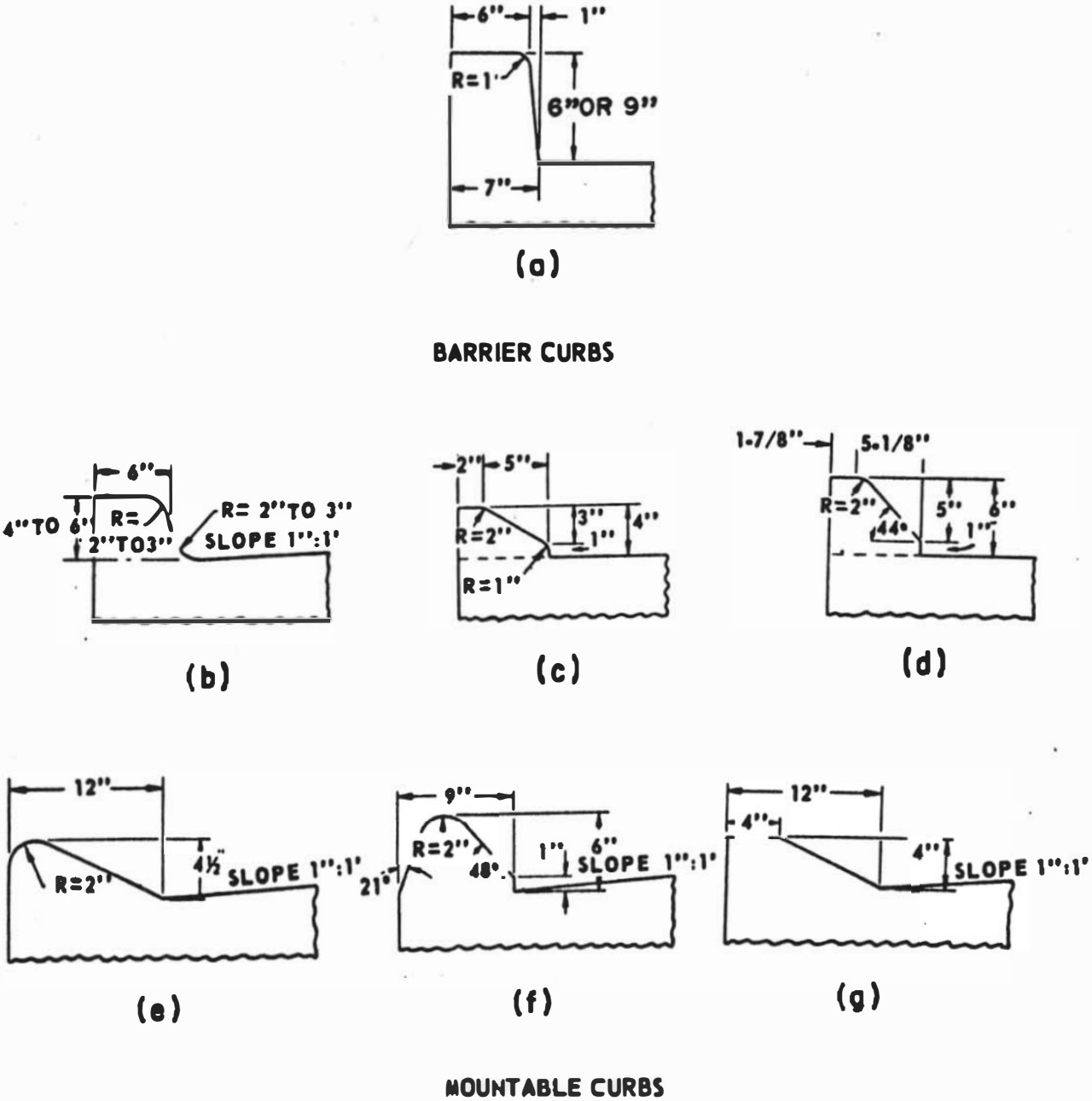

Figure 25. AASHTO Mountable and Barrier Curb Types

W-beam to the back of the steel posts, and Test 1862-14-91 used a channel rub-rail to stiffen the system. These retrofitted systems, containing a 6-in. asphalt curb under the guardrail, successfully redirected the impacting vehicle.

Comparisons of test results between Test MO6C-1, which contained a barrier curb; and Test KSWB-1 (11), which was conducted on a standard G4(1S) system without the barrier curb are shown in Table 3. Test KSWB-1 was conducted within another test program at the Midwest Roadside Safety Facility (MwRSF) in 1993. As shown in Table 3, both tests were conducted with a 4500-lb sedan and had very similar impact conditions, providing a justified comparison from an impact severity standpoint. As indicated from these test results the curb/guardrail configuration tested did not pose any additional significant hazards and in most cases the test results including structural adequacy, occupant risk, and post impact vehicle trajectory were equivalent or less severe.

Table 3. Comparison of Test Results (KSWB-1 and MO6C-1)

Test Parameter	KSWB-1[1]	MO6C-1
Test Inertial Weight	4399 lb	4500 lb
Impact Speed	61.9 mph	59.7 mph
Impact Angle	25.1 deg	25.1 deg
Impact Severity	101.8 k-ft	96.8 k-ft
Exit Angle	14.5 deg	6.2 deg
Exit Speed	40.1 mph	40.0 mph
Max Perm. Set Deflection	22.0 in.	30.1 in.
Max Dynamic Deflection	29.7 in.	31.7 in.
Longitudinal OIV	21.3 fps	18.6 fps
Lateral OIV	17.7 fps	15.8 fps
Longitudinal Deceleration	8.8 g's	3.2 g's
Lateral Deceleration	11.9 g's	8.5 g's
Vehicle Rebound Dist.	17 ft	10.8 ft

1 MwRSF (11)

5 CONCLUSIONS

The analysis of the test results revealed that the Missouri curb/guardrail installation successfully redirected the test vehicle. In addition the barrier, and its components, did not penetrate into the occupant compartment. The vehicle also remained upright, both during and after impact. Vehicle decelerations and trajectory were well within recommended limits. Due to the success of the more severe first test (MO6C-1), the supplemental test with the 1800-lb vehicle (MO6C-2) was not conducted because of the unlikelihood of vehicle stability or containment problems. This was justified in the successful test results of Test 1862-4-89 using an 1800-lb vehicle, which was conducted on a curb/guardrail installation consisting of a 6-in. asphalt dike located flush with the guardrail. The results of Test 1862-4-89 concluded that the 1800-lb vehicle test was safely redirected.

In summary, the safety performance of Missouri's 6-in. barrier curb under W-beam guardrail was determined to be acceptable according to the NCHRP 230 criteria presented in Table 1. The guardrail system has proven to perform satisfactorily and should continue to be used where warranted.

6 REFERENCES

1. Chief, Federal-Aid and Design Division, U.S. Department of Transportation, Federal Highway Administration, *Performance of Guardrail/Curb Combinations* Memorandum HNG-14, February 28, 1992.

2. Michie, J.D., *Recommended Procedures for the Safety Performance Evaluation of Highway Appurtenances*, National Cooperative Highway Research Program Report No. 230, Transportation Research Board, Washington, D.C., March 1981.

3. Hinch, J., Yang, T-L, and Owings, R., *Guidance Systems for Vehicle Testing*, ENSCO, Inc., Springfield, VA, 1986.

4. *Missouri Standard Plans For Highway Construction*, Missouri Highway and Transportation Commission, Drawing No. 606.22K, January 1992.

5. Taborck, J.J., "*Mechanics of Vehicles - 7*", Machine Design Journal, May 30, 1957.

6. Enhanced Graphics Acquisition and Analysis (EGAA), Operation Guide and Reference Manual, Version 3.34.1, R.C. Electronics, Goleta, CA, December 1990.

7. The DADiSP Worksheet, Data Analysis and Display Software, User and Reference Manuals, Version 3.0, DSP Development Corporation, Cambridge MA, December 1991.

8. *Vehicle Damage Scale for Traffic Investigators*, Traffic Accident Data Project Technical Bulletin No. 1, National Safety Council, Chicago, IL, 1971.

9. *Collision Deformation Classification, Recommended Practice J224 March 1980*, SAE Handbook Vol. 4, Society of Automotive Engineers, Warrendale, Penn., 1985.

10. *A Policy on Geometric Design of Highways and Streets*, American Association of State Highway Officials (AASHTO), 1990.

11. Holloway, J.H., Sicking, D.L., *Performance Evaluation of KDOT W-Beam Systems*, Draft Report in Progress, Midwest Roadside Safety Facility, University of Nebraska-Lincoln, December 1993.

7 APPENDICES

APPENDIX A.

OCCUPANT RISK DATA ANALYSIS PLOTS

Figure A-1 Graph of Longitudinal Occupant Impact Velocity

Figure A-2 Graph of Lateral Occupant Impact Velocity

Figure A-3 Graph of Longitudinal Deceleration

Figure A-4 Graph of Lateral Deceleration

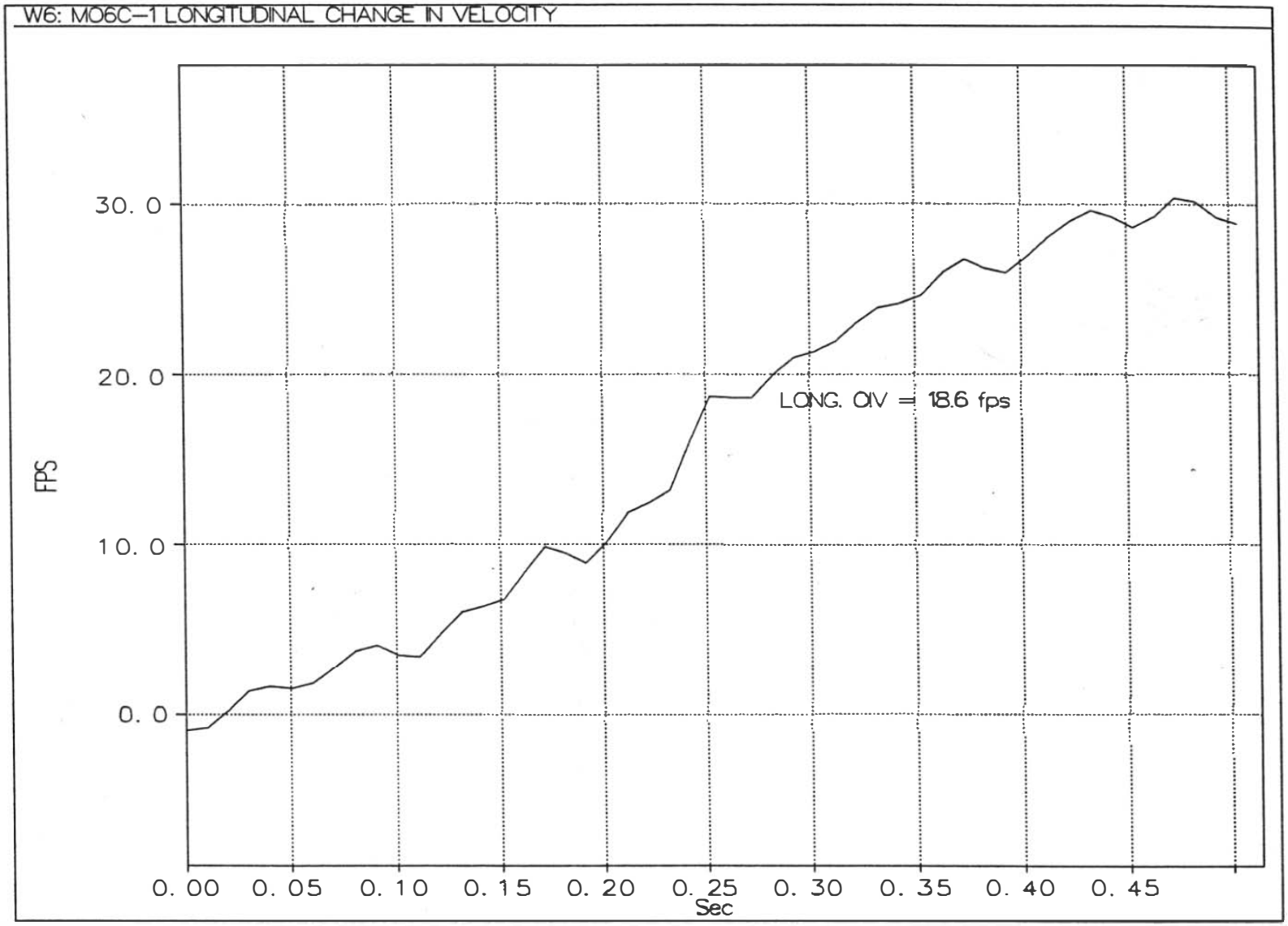

Figure A-1 Graph of Longitudinal Occupant Impact Velocity

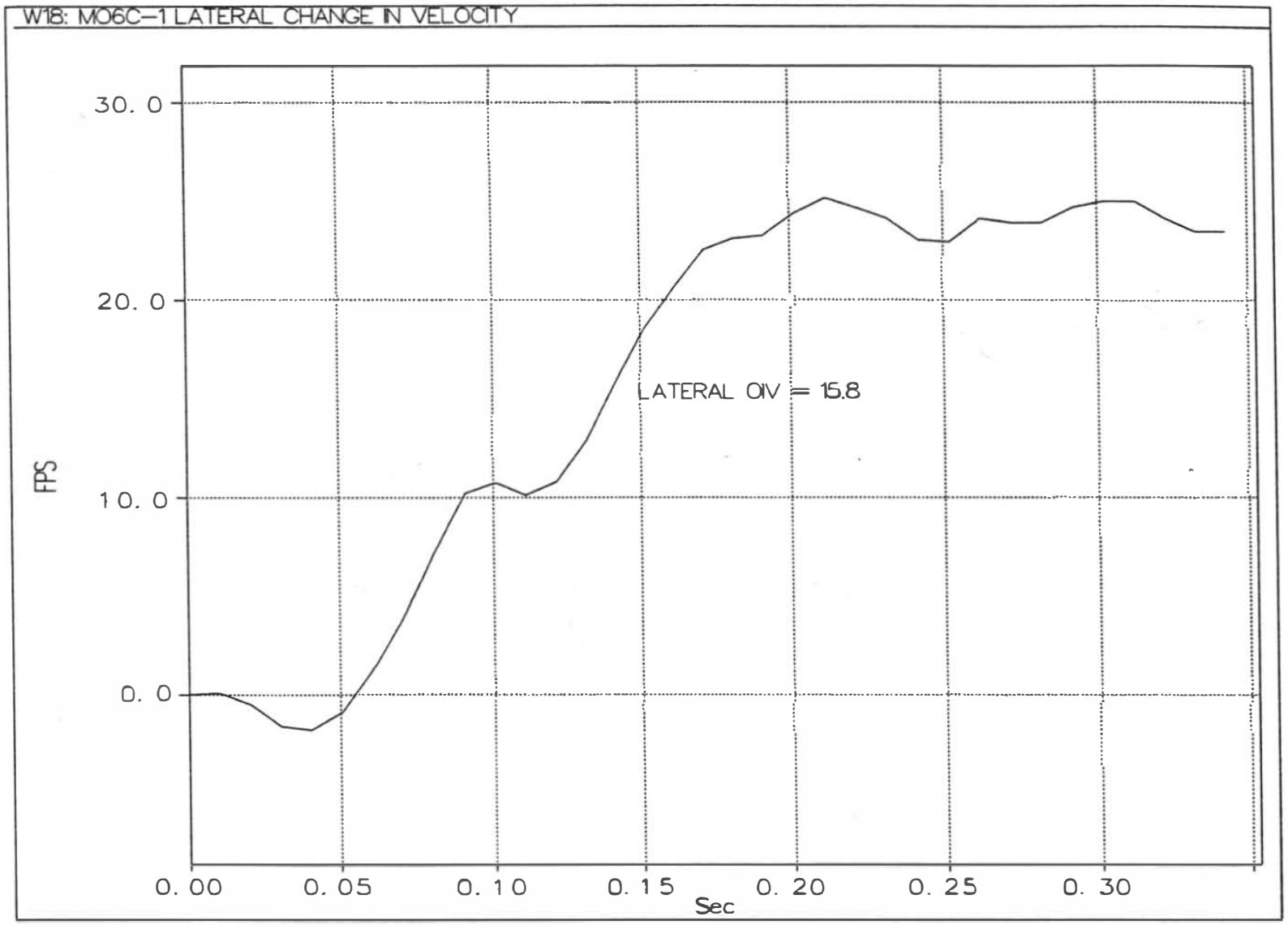

Figure A-2 Graph of Lateral Occupant Impact Velocity

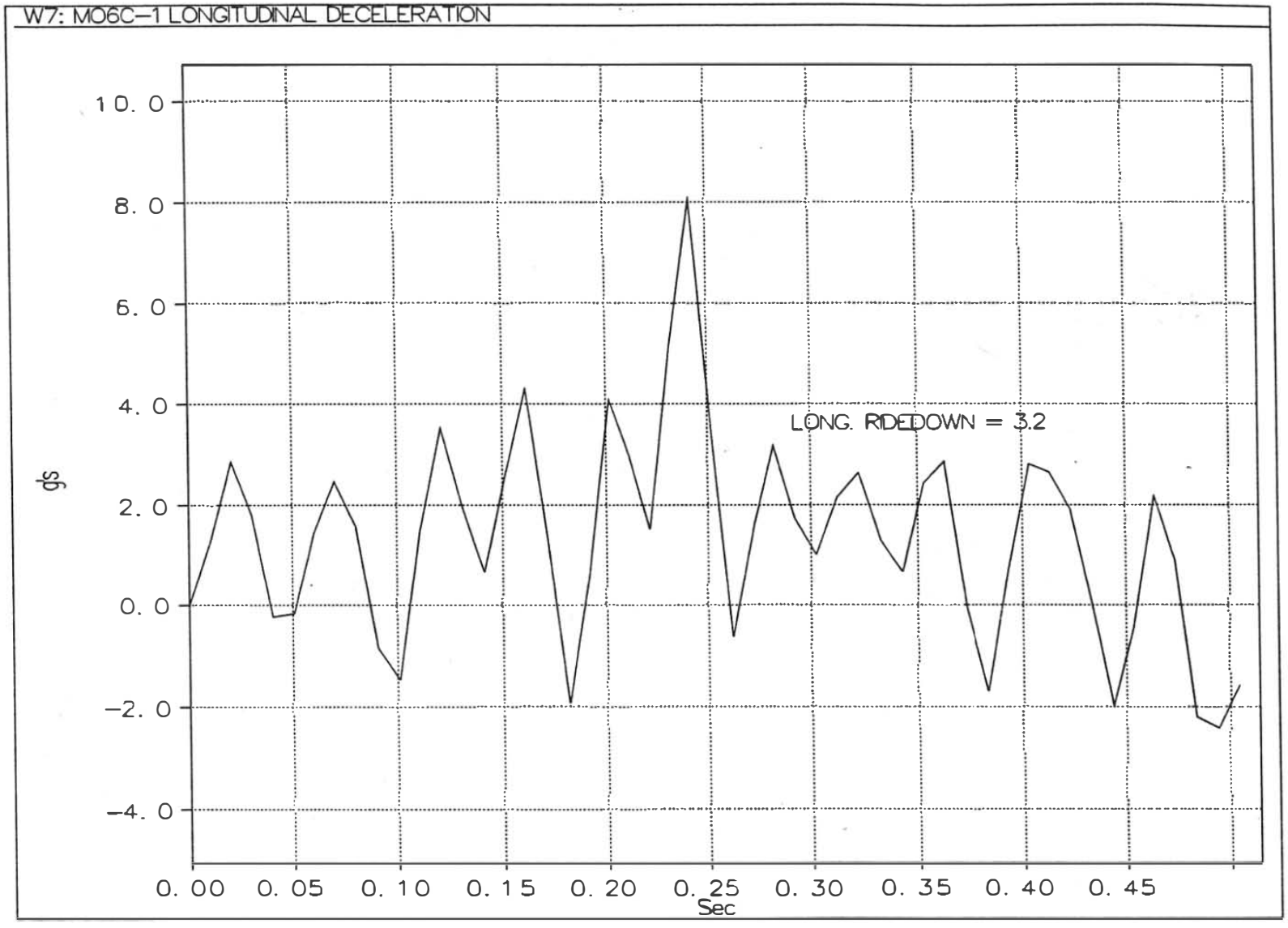

Figure A-3 Graph of Longitudinal Deceleration

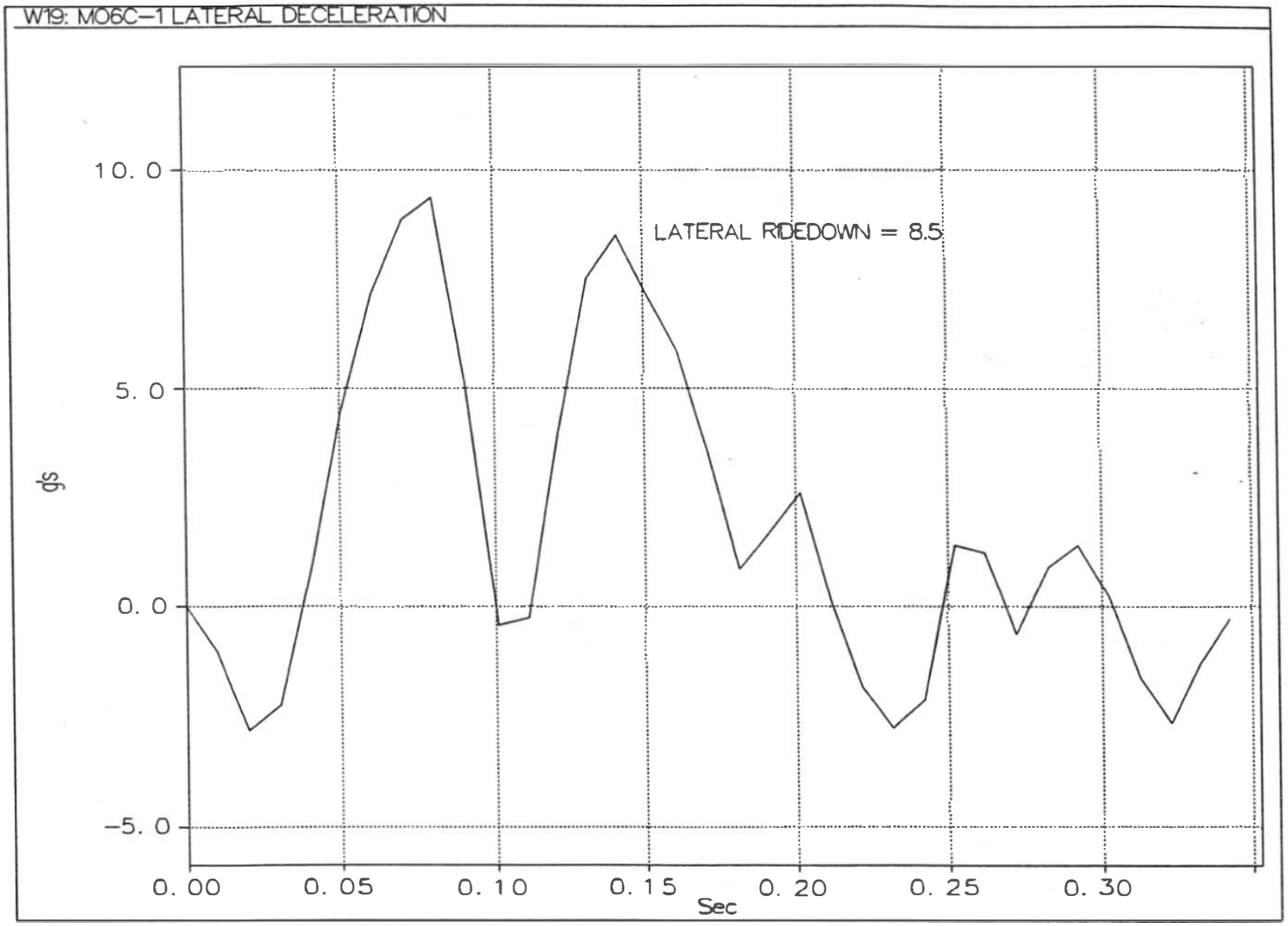

Figure A-4 Graph of Lateral Deceleration