FULL-SCALE VEHICLE CRASH TESTS ON THE IOWA BOX-ALUMINUM BRIDGE RAIL

by

Mr. Ronald K. Faller, E.I.T.
Graduate Research Engineer

Mr. John A. Magdaleno, E.I.T.
Graduate Research Engineer

Dr. Edward R. Post, P.E.
Professor of Civil Engineering

submitted to

Mr. William A. Lundquist, P.E.
Bridge Engineer
Iowa Department of Transportation

in cooperation with the

Federal Highway Administration — Iowa Division

TRANSPORTATION RESEARCH REPORT TRP-03-013-88

Civil Engineering Department
W348 Nebraska Hall
University of Nebraska–Lincoln
Lincoln, Nebraska
68588-0531

November, 1988

DISCLAIMER STATEMENT

The contents of this report reflect the views of the authors who are responsible for the facts and the accuracy of the data presented herein. The contents do not necessarily reflect the official views or policies of the Iowa Department of Transportation or the Federal Highway Administration. This report does not constitute a standard, specification, or regulation.

TABLE OF CONTENTS

Page

Abstract iii

List of Tables iv

List of Figures v

Acknowledgments vi

1. INTRODUCTION 1

1.1 Problem Statement 1

1.2 Objective of Study 1

2. TEST CONDITIONS 2

2.1. Test Facility 2

2.1.1. Test Site 2

2.1.2. Vehicle Tow System 2

2.1.3. Vehicle Guidance System 2

2.2. Bridge Rail Design Details 6

2.3. Test Vehicles 10

2.4. Data Acquisition Systems 14

2.4.1. Accelerometers 14

2.4.2. High-Speed Photography 14

2.4.3. Speed Trap Switches 18

2.5. Test Parameters 20

3. PERFORMANCE EVALUATION CRITERIA 21

4. TEST RESULTS 24

4.1. Test No. I1-1 24

4.2. Test No. I1-2 29

5. CONCLUSIONS 36

6. REFERENCES 41

7. APPENDICES 42

Appendix A Concrete Compressive Strengths and Design Mix 43

Appendix B Occupant Risk Determination 46

Appendix C Accelerometer Data Analysis 48

Appendix D Relevant IDOT Correspondence 61

ABSTRACT

Two full-scale vehicle crash tests were conducted on the Iowa Box-Aluminum Bridge Rail. Test I1-1 was conducted with an 1800 lb. vehicle at 15 deg. and 60 mph. Test I1-2 was conducted with a 4310 lb. vehicle at 25 deg. and 60 mph. The Iowa Box-Aluminum Bridge Rail contained two rail splices. Each splice was 26 ft.-6 in. from the rail post on each end. The point of impact for Test I1-1 was directly at a splice. The point of impact for Test I1-2 was directly at the midpoint of the span that contained the second splice. The tests were evaluated according to the safety criteria in NCHRP 230. The safety performance of the Iowa Box-Aluminum Bridge Rail was determined to be unsatisfactory.

LIST OF TABLES

Page

1. Crash Test Conditions and NCHRP 230 Safety Evaluation Criteria 22
2. Summary of Test Results 37
3. Safety Evaluation Summary 38

7. Photographs of Test Vehicles 11

8. Vehicle Dimensions for Honda Civic 12

9. Vehicle Dimensions for Cadillac Coupe Deville 13

10. Photographs of the Onboard Data Acquisition System . . . 15

11. Flowchart of Accelerometer Data Acquisition System . . . 16

12. Data Recorder and 386/AT Computer 17

13. High-Speed Camera Locations 19

14. Test I1-1 Summary and Sequential Photos 25

15. Photographs of Vehicle Damage, Test I1-1 26

16. Photographs of Box-Aluminum Bridge Rail Damage,
Test I1-1 27

17. Test I1-2 Results and Sequential Photos 30

18. Photographs of Vehicle Damage, Test I1-2 31

19. Photographs of Box-Aluminum Bridge Rail Damage,
Test I1-2 32

20. Permanent Set Graphs, Test I1-2 34

21. Sketch of Misplaced Curb Reinforcement Steel
for Task 1 35

ACKNOWLEDGMENTS

The authors wish to express their appreciation and thanks to the following people who made a contribution to the outcome of this research project.

Iowa Department of Transportation

This evaluation task was administered and directed by William A. Lundquist, Bridge Engineer for the Iowa Department of Transportation, who was assisted by IDOT engineers Roger E. Bierbaum, William C. Eyer, and Ron C. Welch.

Federal Highway Administration

The Iowa Division Office of the Federal Highway Administration was represented by Bruce L. Brakke, Division Bridge Engineer, and John M. Latterell, Division Safety Engineer, who cooperated and advised during the evaluation.

Nebraska Department of Roads

Dalyce Ronnau (Materials and Test Division and Research Engineer)

John Luedeke (Materials and Test Division)

Dan Kluck (Materials and Test Division)

University of Nebraska-Lincoln

Ron Hoffman (Electrician - Maintenance)

Michael Cacak (Manager - Automobile Support Services)

Patrick Barrett (Assistant Manager - Automobile Support Services)

James Dunlap (Manager - Photographic Productions)

Gerald Fritz (E.E. Technician)

Tom Grady (E.E. Technician)

William Kelly (Professor and C.E. Chairman)

Eugene Matson (C.E. Research Technician)

Brian Pfeifer (M.E. Student)

Todd Noble (C.E. Student)

Jim Holloway (C.E. Student)

Mary Lou Tomka (C.E. Administrative Assistant)

Marilyn Mues (C.E. Secretary - Typist)

Mary Lou Wegener (C.E. Secretary - Typist)

Private

Larry Storjohn (Auto Buyer)

Mike Collins (M.E. Collins Construction)

Steve Buchanan (M.E. Collins Construction)

1. INTRODUCTION

1.1. Problem Statement

The Iowa Department of Transportation and the Federal Highway Administration are concerned with the safety and structural adequacy of highway and bridge railing systems installed on Iowa highways. The performance of certain Iowa railing systems, now in service, cannot be predicted nor verified by conventional analysis.

Current AASHTO Standard Specifications for Highway Bridges permits the qualification of railing systems by full-scale vehicle crash testing. The Federal Highway Administration has directed that bridge railing systems be successfully crash tested before their use on Federal Aid Projects is approved.

The Iowa Box-Aluminum Bridge Rail was constructed for approximately 10 years between 1965 and 1975. The Box-Aluminum Rail came as a result from changes in the 1964 Interim Bridge Specifications to AASHTO and is an extruded, ductile aluminum rail system mounted on top of a concrete curb.

The results of this study will be used to help guide the IDOT in the identification and evaluation of current procedures in which to improve the safety of the roadway environment.

1.2. Objective of Study

The objective of the research study was to evaluate the safety performances of the Iowa Box-Aluminum Bridge Rail by conducting full-scale vehicle crash tests in accordance with the recommended procedures in NCHRP 230 (1).

site facility to ensure that no vandalism would occur to the test articles or test vehicles which could possibly disrupt the results of the tests.

2.1.2. Vehicle Tow System

A reverse cable tow, with a 1:2 mechanical advantage, was used to propel the test vehicle. The distance traveled and speed of the tow vehicle are one-half of that of the test vehicle. A sketch of the cable tow system is shown in Figure 2. The test vehicle was released from the tow cable approximately 10 ft. for Test I1-1 and 18 ft. for Test I1-2 before impact with the Box-Aluminum Bridge Rail. Photographs of the tow vehicle and the attached fifth-wheel are shown in Figure 3. The fifth-wheel, built by the Nucleus Corporation, was used for accurately towing the test vehicle at the required target speed with the aid of a digital speedometer in the tow vehicle.

2.1.3. Vehicle Guidance System

A vehicle guidance system, developed by Hinch (2), was used to steer the test vehicle. Photographs of the guidance system

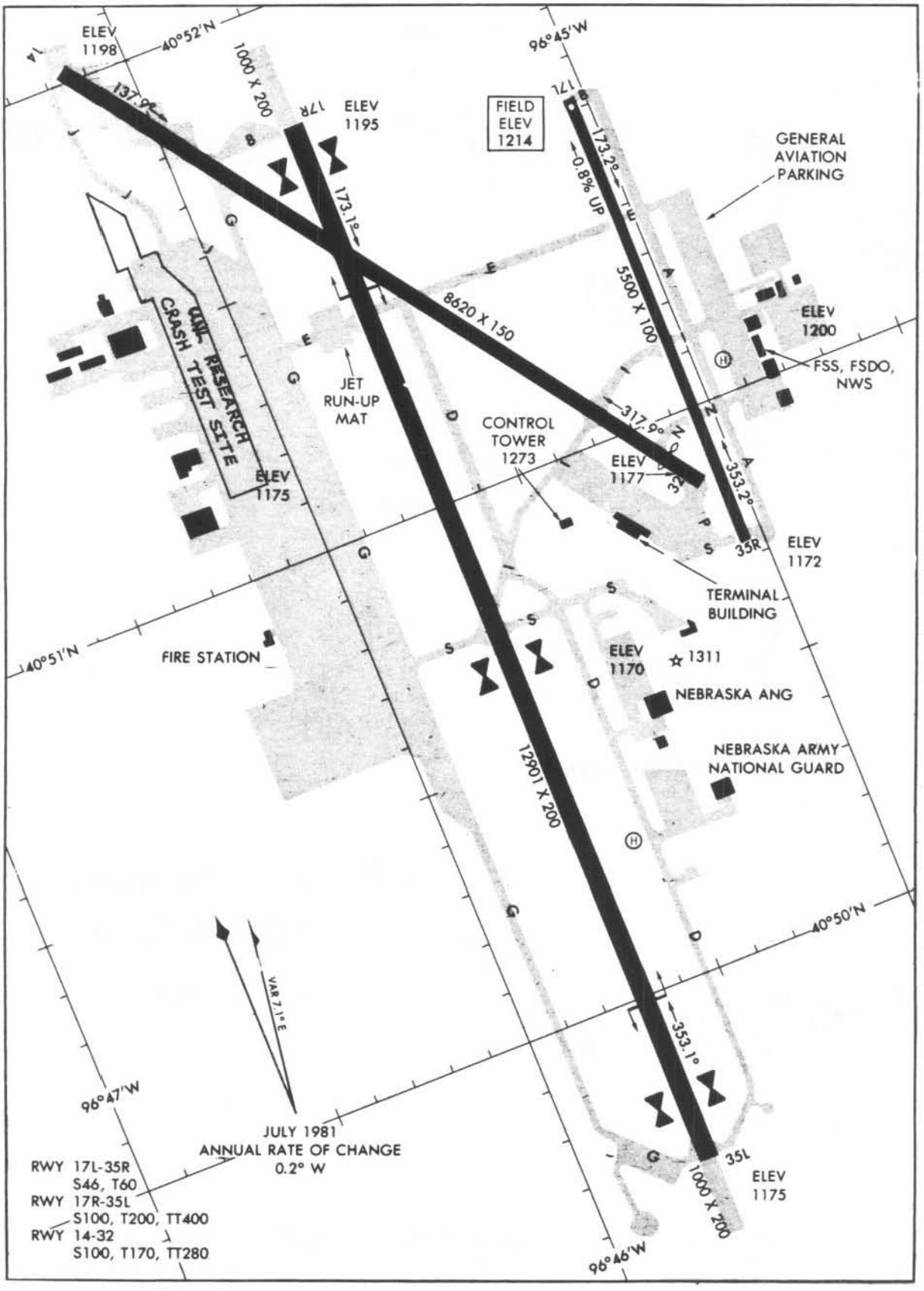

FIGURE 1. FULL-SCALE VEHICLE CRASH TEST FACILITY

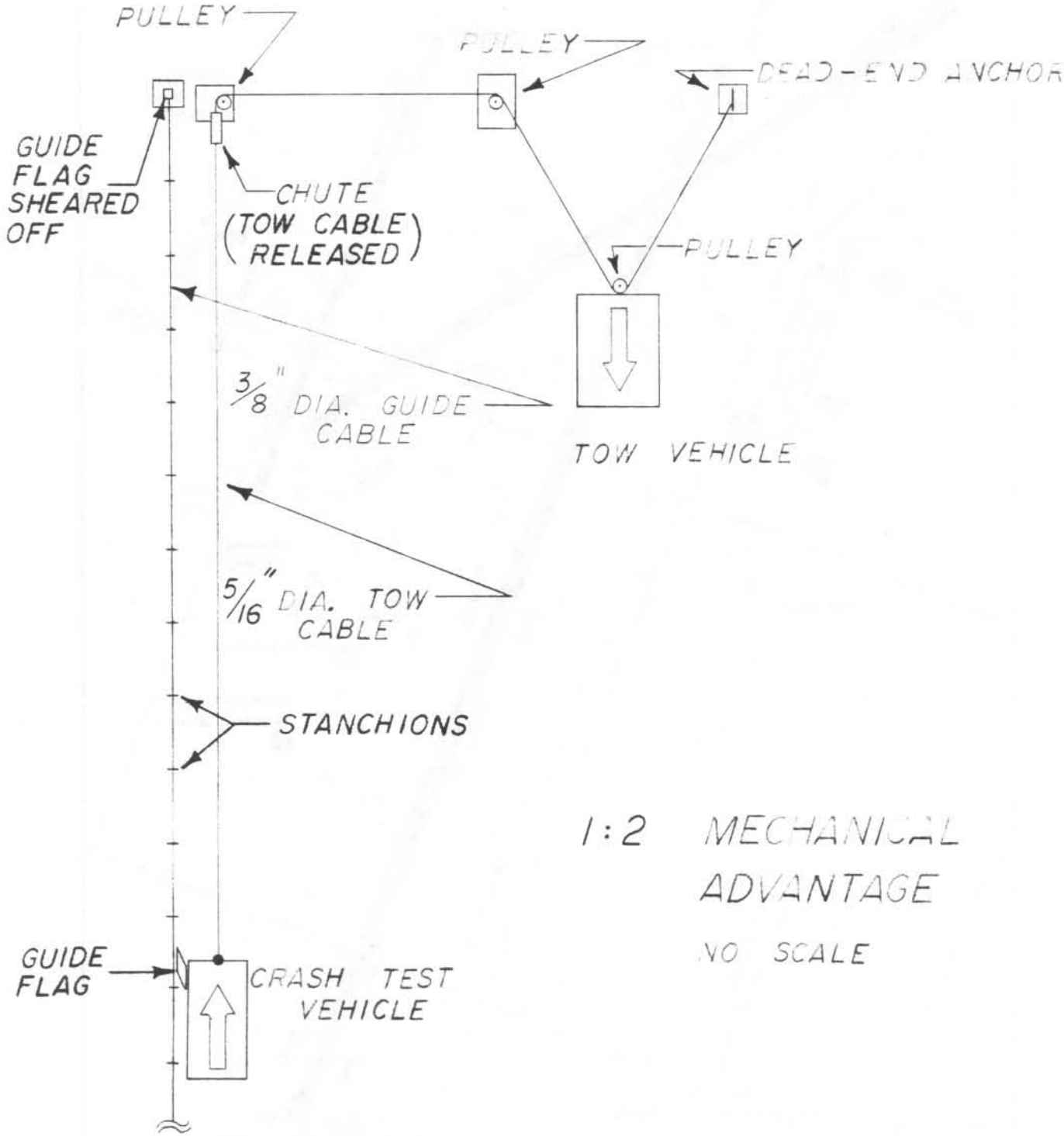

FIGURE 2. SKETCH OF CABLE TOW AND GUIDANCE SYSTEMS

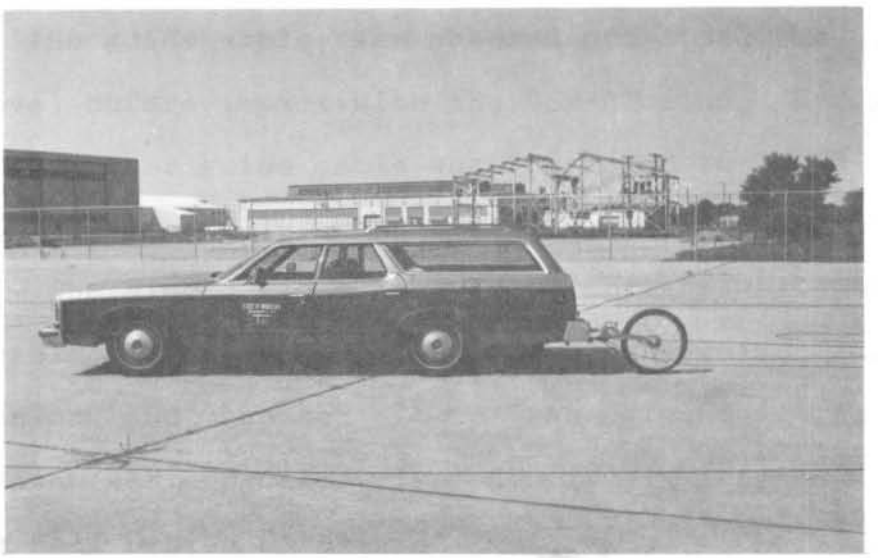

FIGURE 3. PHOTOGRAPHS OF TOW VEHICLE AND FIFTH WHEEL

are shown in Figure 4, and a sketch of the guidance system is shown in Figure 2. The guide-flag, attached to the front left wheel and the guide cable, was sheared off (at the distances stated above) before impact with the Box-Aluminum Bridge Rail. The 3/8-in. diameter guide cable was tensioned to 3,000 lbs., and it was supported laterally and vertically every 100 ft. by hinged stanchions. The hinged stanchions stood upright while holding up the guide cable. When the vehicle passed, the guide-flag struck each stanchion and knocked it to the ground. The vehicle guidance system was approximately 1,500 ft. in length

2.2. Bridge Rail Design Details

An overall view of the Iowa Box-Aluminum Bridge Rail is shown in the photographs in Figure 4, and detailed drawings are shown in Figures 5 and 6. Excluding the concrete end walls, the box-aluminum bridge rail was approximately 86 ft. in length. The bridge rail consisted of four major components: the concrete curb, aluminum posts, aluminum rail members, and concrete end walls.

The 12-in. concrete curb was constructed with a Nebraska Class 47-B-PHE mix design. The concrete compressive strength at the time of the crash tests averaged about 6,000 psi (see Appendix A). The curb was 20-in. wide and 86 ft. in length. The curb was anchored 8-in. into the existing airport concrete apron by 2 L-shaped No. 5 rebar dowels, spaced at 14-in. on centers over the length of the curb. An epoxy grout material was used as the bonding agent for the dowels.

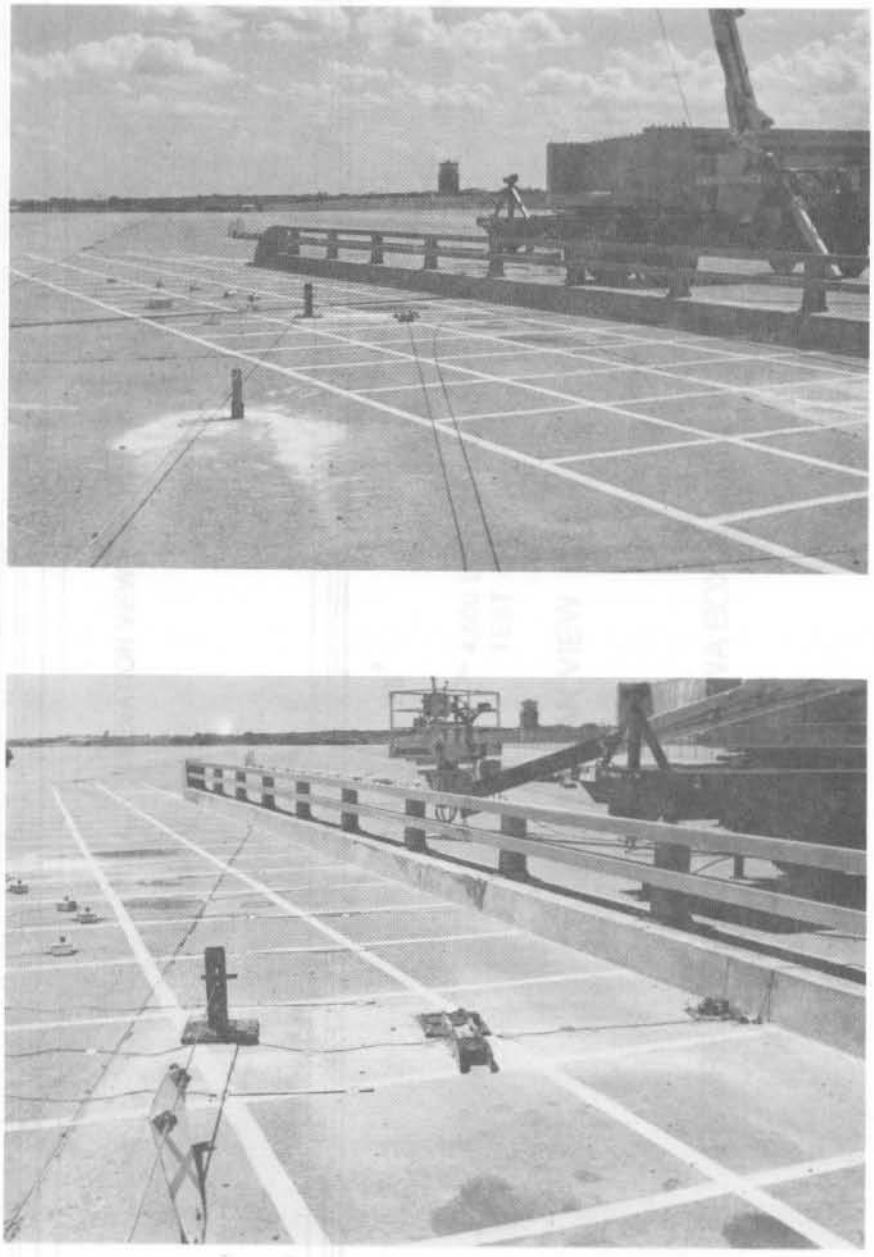

FIGURE 4. PHOTOGRAPHS OF VEHICLE GUIDANCE SYSTEM

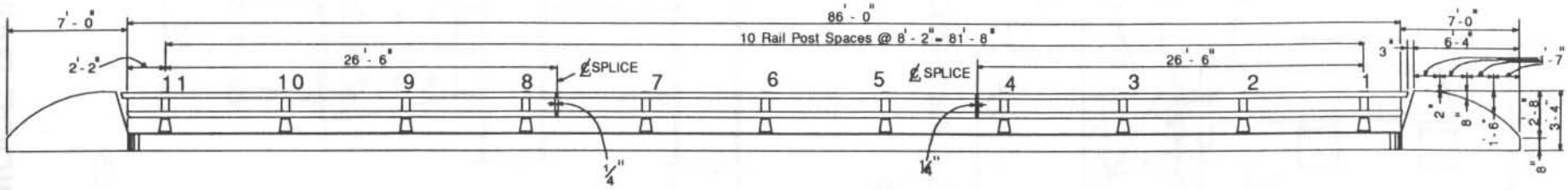

A) ELEVATION VIEW

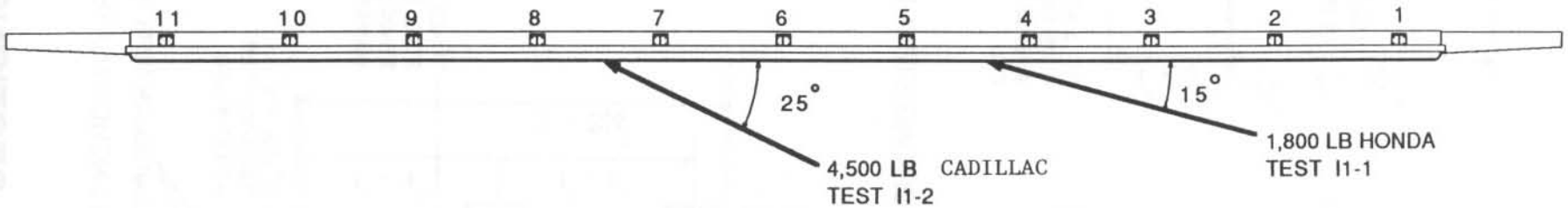

A) PLAN VIEW

FIGURE 5. SKETCH OF THE IOWA BOX-ALUMINUM BRIDGE RAIL

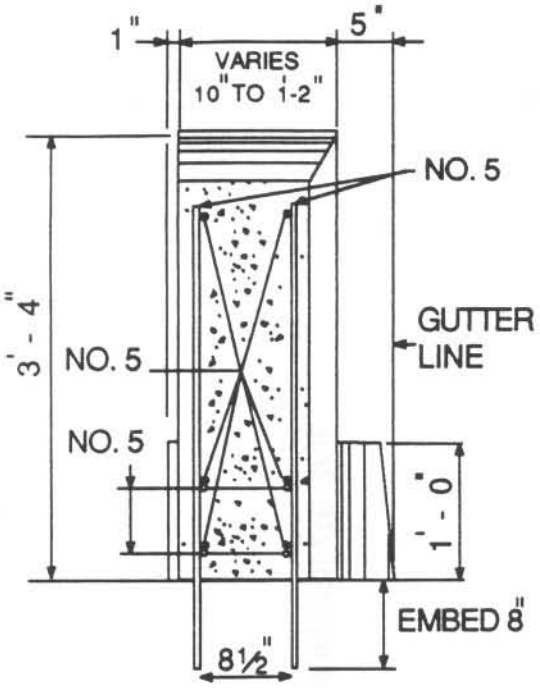

TYPICAL ENDWALL SECTION

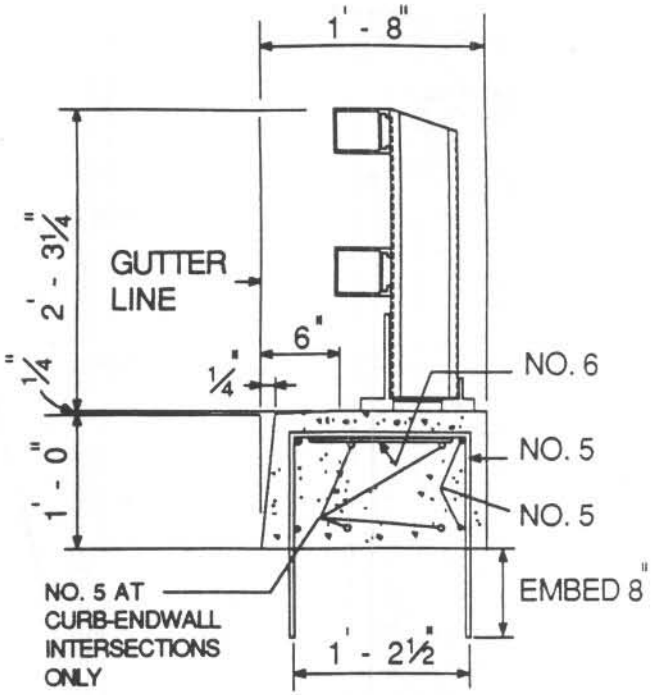

TYPICAL CURB SECTION

NOTE: ALL REINFORCING STEEL IS GRADE 60

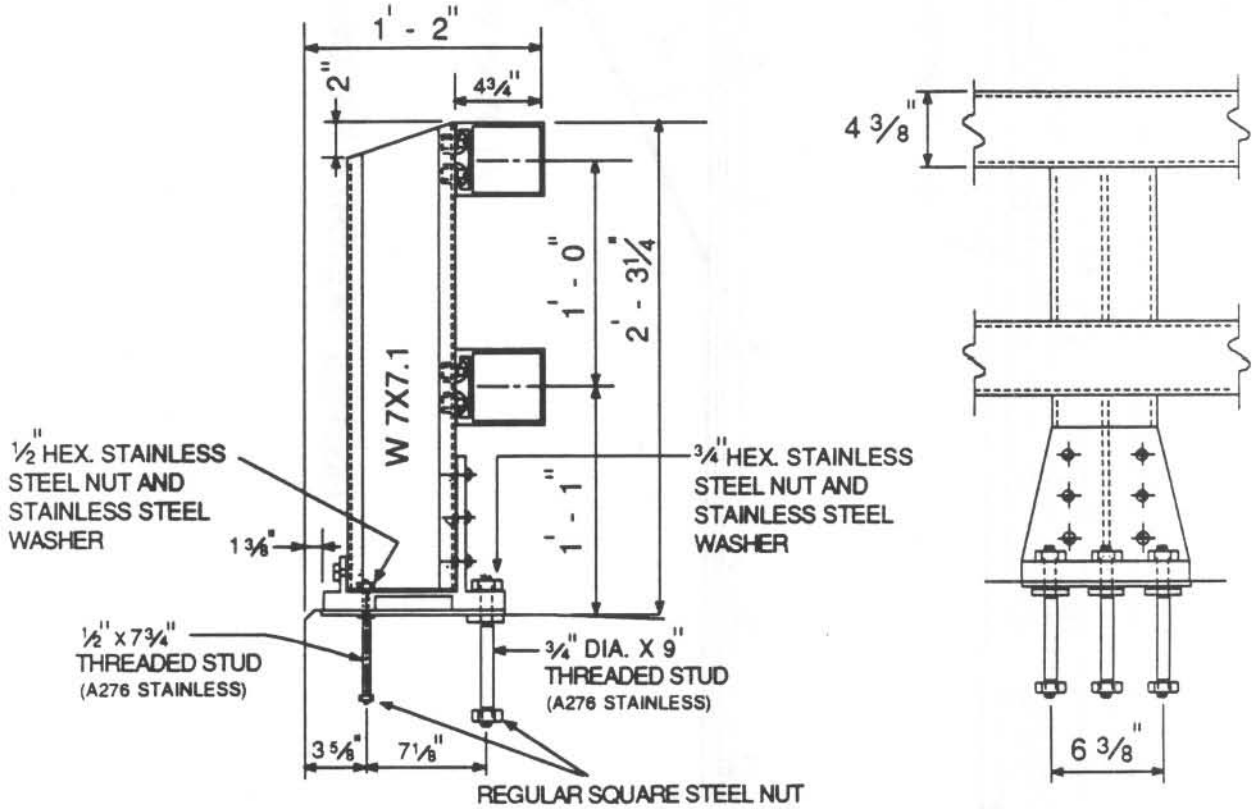

TYPICAL POST AND ANCHOR PLATE ASSEMBLIES

FIGURE 6. TYPICAL SECTIONS OF BRIDGE RAIL

The eleven 27 1/4-in. aluminum posts were spaced 8 ft.-2 in. on centers. Stainless steel bolts were used in the post anchor base assembly. The lower and upper box rail members supported by the posts were located at heights of 13-in. and 25-in. above the top of the curb, respectively. Each rail member contained two splices located 26 ft.-6 in. from the post on each end.

2.3. Test Vehicles

Two different test vehicles were used to evaluate the Iowa Box-Aluminum Bridge Rail.

For Test I1-1, a 1982 Honda Civic weighing approximately 1,800 lbs. was used as the crash test vehicle. For Test I1-2, a 1982 Cadillac Coupe Deville weighing approximately 4,310 lbs. was used as the crash test vehicle. Photographs of the two test vehicles are shown in Figure 7. Dimensions of the test vehicles are shown in Figures 8 and 9.

The front wheels of both vehicles were aligned to a toe-in value of zero-zero so that the vehicle would track properly along the guide cable.

Two 8-in. square, black and white checkered targets were placed on the centerline of the roof of each test vehicle. For Test I1-1, the front target was placed over the center of mass, and the rear target was 4 ft. to the rear. For Test I1-2, the front target was positioned over the center of mass, and the rear target was 5 ft. to the rear. The targets were used in the analysis of the high-speed film. In addition to roof targets, side targets were also placed at known distances to aid in the

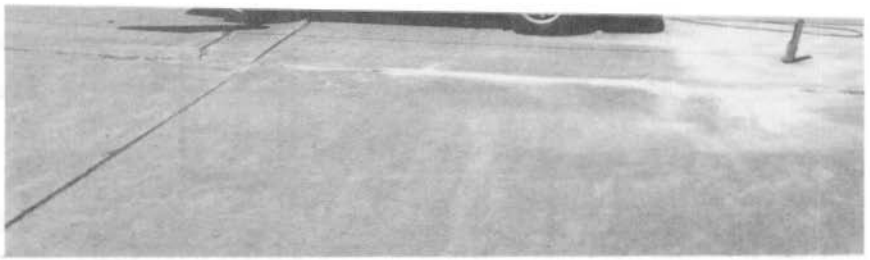

FIGURE 7. PHOTOGRAPHS OF TEST VEHICLES

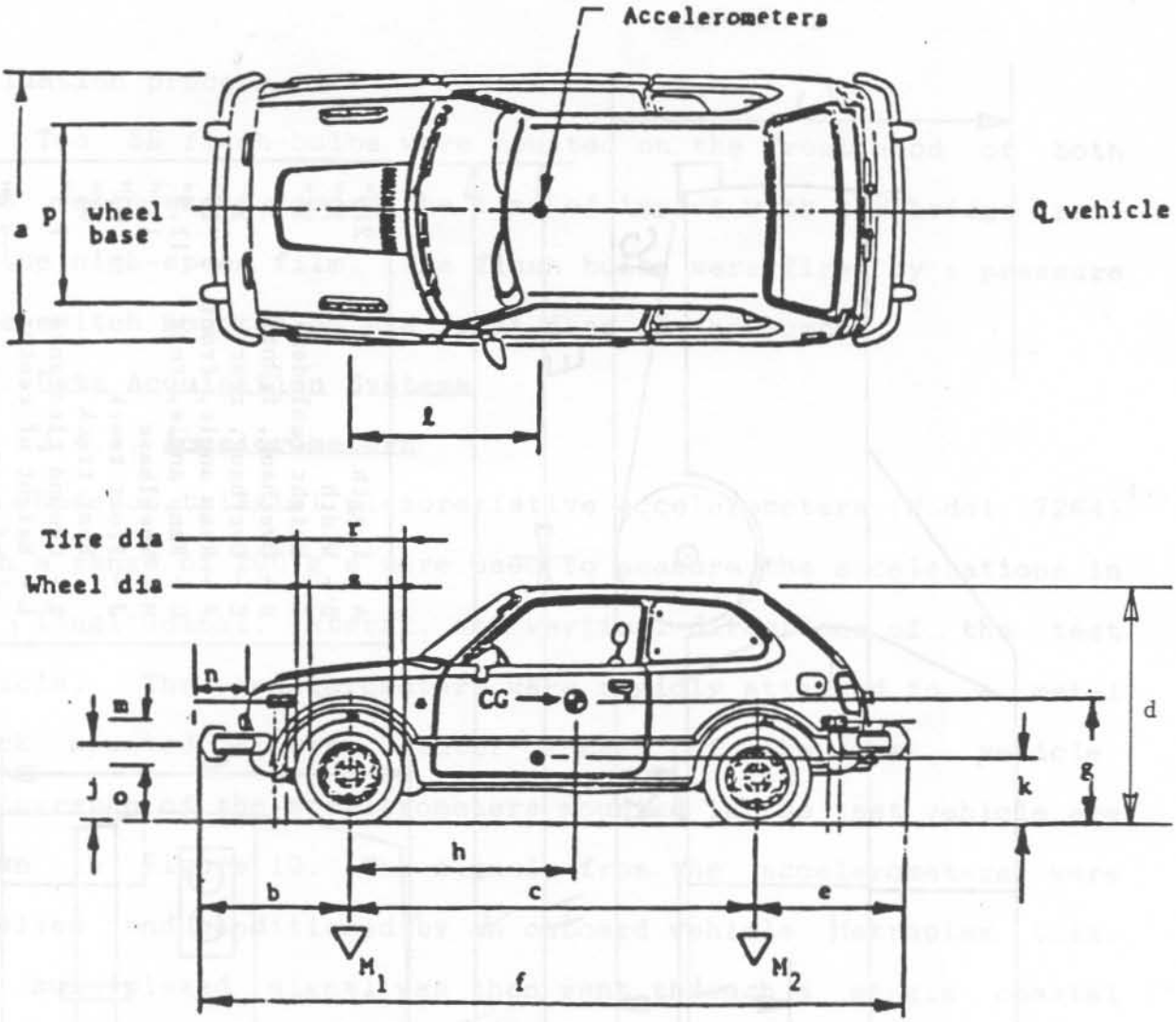

Geometry - in. (in.)

a	62.2"	d	53.2"	j	18"	m		p	53.5"
b	29.5"	e	28"	k	21.5"	n	4.5"	r	14.2"
c	88.6"	f	148.4"	ℓ	33"	o	10"	s	22.6"

Mass - lb (kg)	Curb	Test Inertial*	Gross Static**
M_1		1150 lb	
M_2		650 lb	
M_T		1800 lb	1965 lb
h - in. (m) 33"			
g - in. (m) 21.5"			

Moments of Inertia (lb-ft-sec^2)

Roll		
Yaw		
Pitch		

***Ready for test but excludes passenger/cargo payload**
****Gross ready for test including passenger/cargo payload**

FIGURE 8. VEHICLE DIMENSIONS FOR HONDA CIVIC

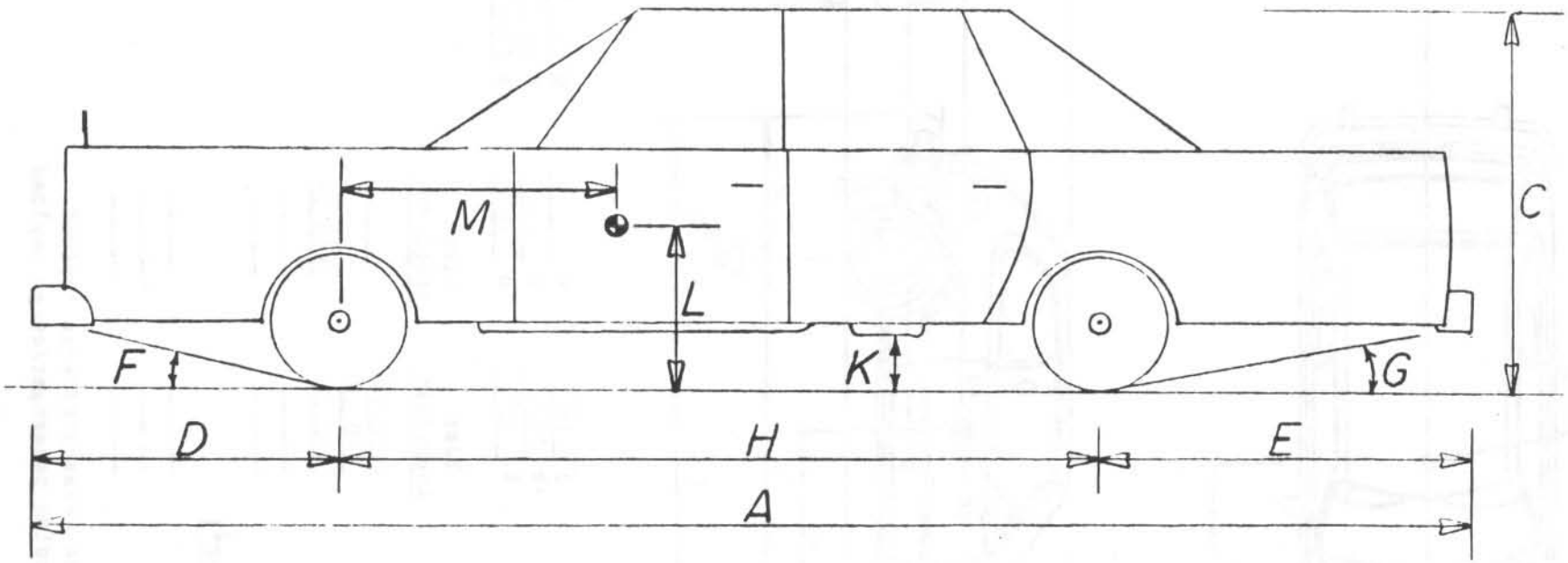

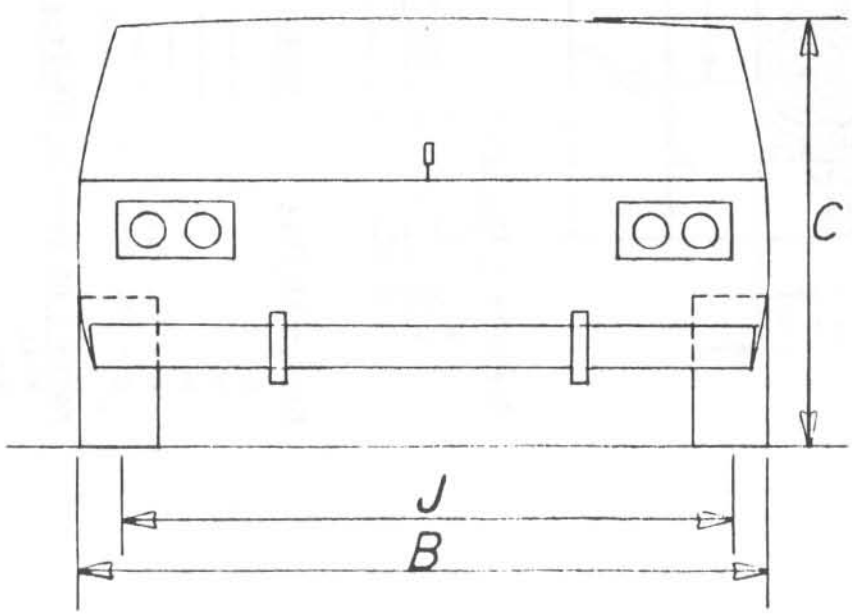

A - Length	219"
B - Width	72"
C - Height (unladen)	55"
D - Overhang, front	37"
E - Overhang, rear	57"
F - Ramp angle, front	19°
G - Ramp angle, rear	11.9°
H - Wheelbase	121"
J - Front track	62"
Rear track	61"
K - Ground clearance	7.5"
L - Height of center of mass	22.6"
M - Front axle to C.G.	56.6"

FIGURE 9. VEHICLE DIMENSIONS FOR CADILLAC COUPE DIVILLE

evaluation process.

Two 5B flash-bulbs were mounted on the front hood of both test vehicles to record the time of impact with the bridge rail on the high-speed film. The flash bulbs were fired by a pressure tape switch mounted on the front face of the bumper.

2.4. Data Acquisition Systems

2.4.1. Accelerometers

Endevco triaxial piezoresistive accelerometers (Model 7264) with a range of 200 g's were used to measure the accelerations in the longitudinal, lateral, and vertical directions of the test vehicle. The accelerometers were rigidly attached to a metal block mounted at the center-of-mass of the test vehicle. Photographs of the accelerometers mounted in the test vehicle are shown in Figure 10. The signals from the accelerometers were received and conditioned by an onboard vehicle Metraplex Unit. The multiplexed signal was then sent through a single coaxial cable to the Honeywell (101) Analog Tape Recorder in the central control van. A flowchart of the accelerometer data acquisition system is shown in Figure 11, and photographs of the system located in the test vehicle and the centrally controlled step van are shown in Figures 10 and 12. The latest state-of-the-art computer software, "Computerscope and DSP," was used to analyze and plot the accelerometer data on a Cyclone 386/AT, which uses a very high-speed data acquisition board.

2.4.2. High-Speed Photography

Three high-speed 16 mm cameras were used to film the crash

FIGURE 10. PHOTOGRAPHS OF THE ONBOARD DATA ACQUISITION SYSTEM

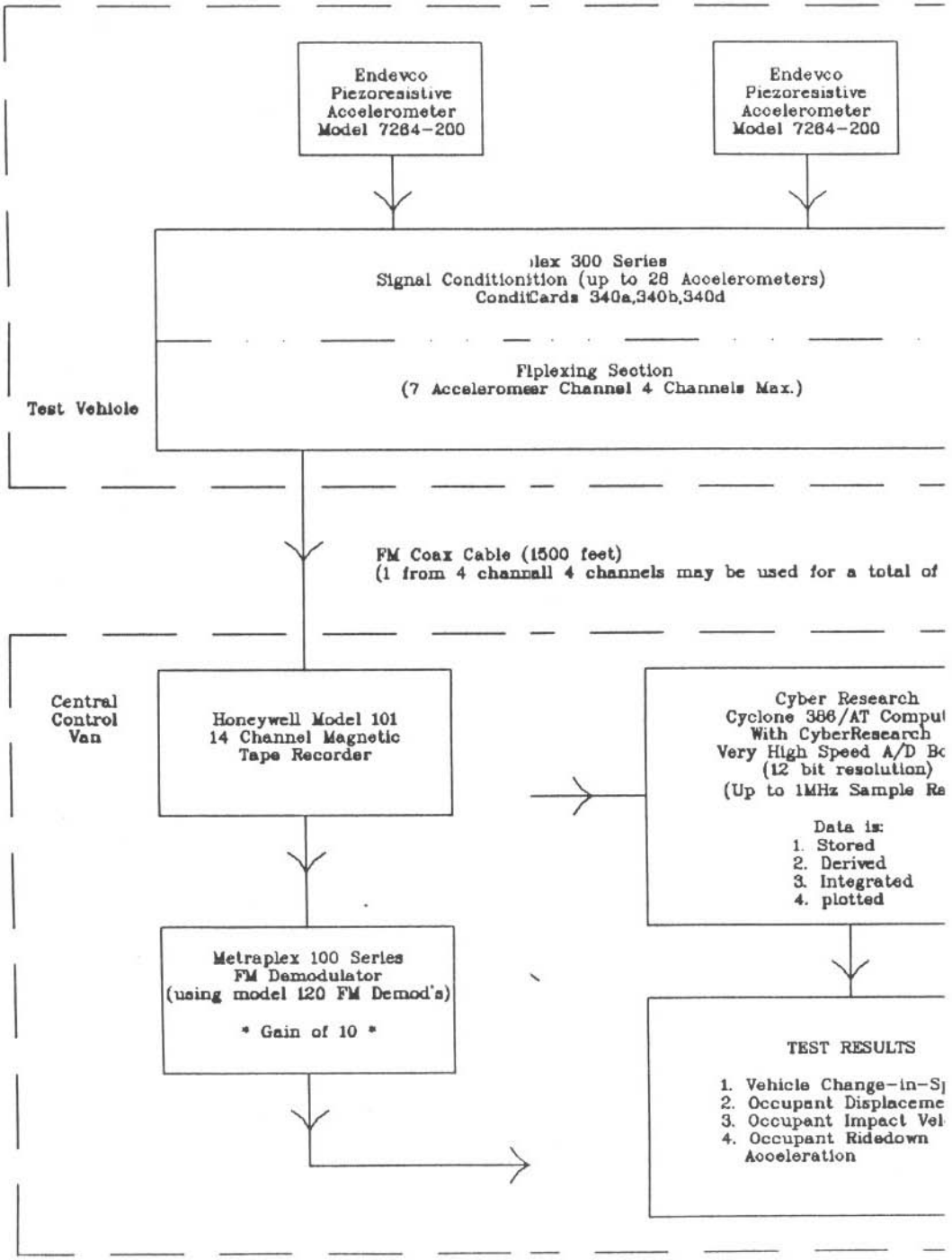

FIGURE 11. FLOWCHART OF ACCELEROMETER DATA ACQUISITION SYSTEM

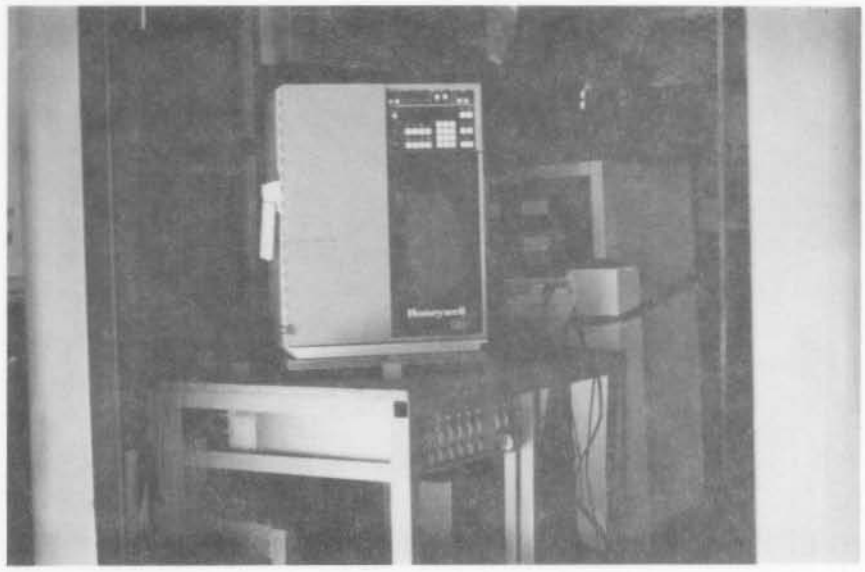

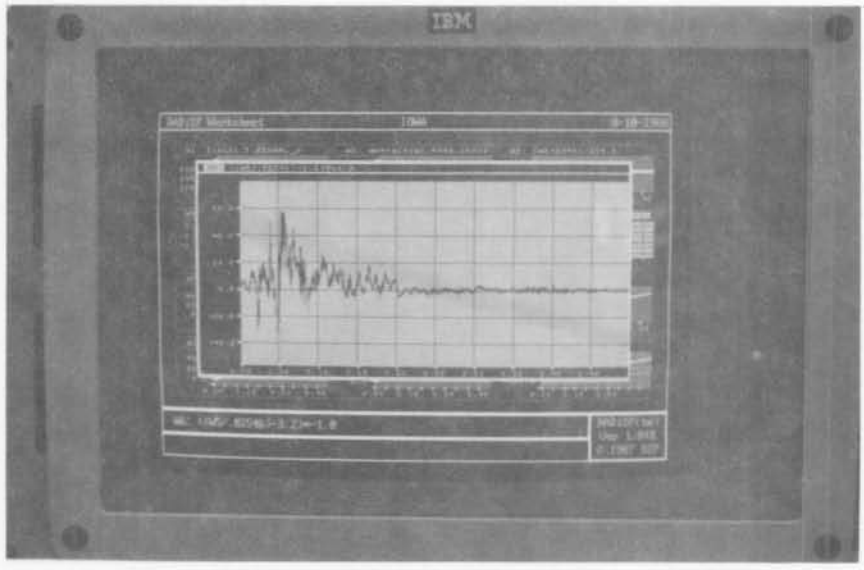

FIGURE 12. DATA RECORDER AND 386/AT COMPUTER

tests. The cameras ran at approximately 500 frames/sec. The overhead camera was a Red Lake Locam with a wide angle 12.5 mm lens. It was placed approximately 53 ft. and 61 ft. above the concrete apron for Test I1-1 and Test I1-2, respectively. The perpendicular camera was a Photec IV with a 55 mm lens. It was placed 165 ft. from the vehicle point of impact. The parallel upstream camera was also a Photec IV with an 80 mm lens. It was placed upstream and offset 3 ft. from a line parallel to the bridge rail. A schematic of the camera layouts are shown in Figure 13.

A 20 ft. wide by 115 ft. long grid layout was painted on the concrete slab parallel and perpendicular to the barrier. The white-colored grid was incremented with 5 ft. divisions in both directions to give a very visible reference system which could be used in the analysis of the overhead high-speed film.

The film was analyzed using the Vanguard Motion Analyzer. The camera divergence correction factors were also taken into consideration in the analysis of the high-speed film.

2.4.3. Speed Trap Switches

Eight tape pressure switches spaced at 5 ft. intervals were used to determine the speed of the vehicle before and after impact. Each tape switch fired a blue 5B flash-bulb located near each switch on the concrete slab as the left front tire of the test vehicle passed over it. The average speed of the test vehicle between the tape switches was determined by knowing the distance between pressure switches, the calibrated camera speed,

FIGURE 13

HIGH-SPEED CAMERA LOCATIONS

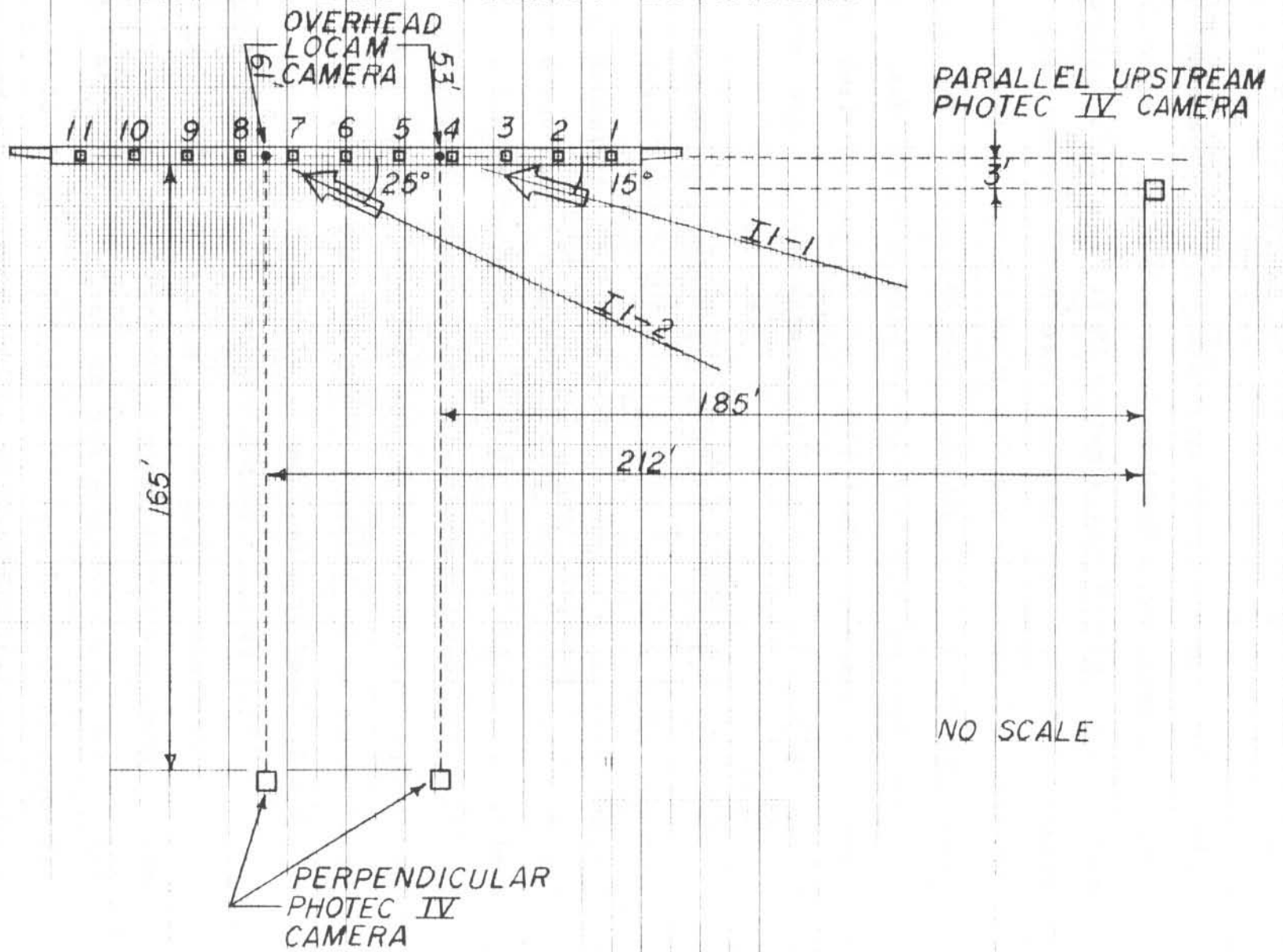

and the number of frames from the high-speed film between flashes. In addition, the average speed was determined from electronic timing mark data recorded on the oscilloscope software used with the 386/AT computer as the test vehicle passed over each tape switch.

2.5. Test Parameters

Two full-scale vehicle crash tests were conducted on Iowa's Box-Aluminum Bridge Rail as shown in Figures 5 and 6.

Test I1-1 was conducted at a target impact speed of 60 mph with an impact angle of 15 degrees. A 1982 Honda Civic weighing 1,800 lb. was used as the crash test vehicle. The location of impact was at the first rail splice 26 ft.-6 in. upstream from the centerline of the first rail post.

Test I1-2 was conducted at a target impact speed of 60 mph with an impact angle of 25 degrees. A 1982 Cadillac Coupe Deville weighing 4,310 lb. was used as the crash test vehicle. The location of impact was at the center of the span containing the second rail splice. The impact point was 53 ft.-1 in. upstream from the centerline of the first rail post.

3. PERFORMANCE EVALUATION CRITERIA

The safety performance objective of a highway appurtenance is to minimize the consequences of a vehicle leaving the roadway to create an off-road incident. The safety goal is met when the appurtenance (Box-Aluminum Bridge Rail) smoothly redirects the vehicle away from a hazard zone without subjecting the vehicle occupants to major injury producing forces.

Safety performance of a highway appurtenance cannot be measured directly, but it can be evaluated according to three major factors: (1) structural adequacy, (2) occupant risk, and (3) vehicle trajectory after collision. These three factors are defined and explained in NCHRP 230 (1).

The test conditions for the matrix are shown in Table 1. Also, the specific evaluation criteria used to determine the adequacy of the barrier are presented.

After each test, the vehicle damage was assessed by the traffic accident data scale (TAD) (3) and the vehicle damage index (VDI) (4).

Because test conditions are sometimes difficult to control, a composite tolerance limit is presented. It is called the impact severity (IS). For structural adequacy, it is preferable for the actual impact severity to be greater than the target value rather than being below it. The IS target values are shown in Table 1. Thus, for Test I1-1, the IS target values range from 12 ft-kips to 16 ft-kips. For Test I1-2, the IS target values range from 88 ft-kips to 114 ft-kips.

Table 1
Crash Test Conditions and NCHRP 230
Safety Evaluation Criteria

Appurtenance	Test Designation	Vehicle Type	Target Impact Speed (mph)	Target Impact Angle (deg)	Target Impact Severity (ft-kips)	Impact Point	Evaluation Criteria*
Longitudinal Barrier							
Box-Aluminum Bridge Rail Test No. I1-1	12	±50 1800 lb	60	15	$14^{-2,+2}$	For post and beam systems, vehicle should contact railing splice.	A,D,E,F,H,I
Box-Aluminum Bridge Rail Test No. I1-2	10	±200 4500 lb	60	25	$97^{-9,+17}$	For post and beam systems, midway between posts in span containing railing splice.	A,D,E,H,I

*Applicable Evaluation Criteria

1. Structural Adequacy
   A. Test article shall smoothly redirect the vehicle; the vehicle shall not penetrate or go over the installation although controlled lateral deflection of the test vehicle is acceptable.

   D. Detached elements, fragments, or other debris from the test article shall not penetrate or show potential for penetrating the passenger compartment or present undue hazard to other traffic.

2. Occupant Risk
   E. The vehicle shall remain upright during and after collision although moderate roll, pitching, and yawing are acceptable. Integrity of the passenger compartment must be maintained with essentially no deformation or intrusion.

   F. Impact velocity of front seat occupant against vehicle interior shall be less than: 30 fps (Longitudinal) and 20 fps (Lateral). (Calculated at 24" forward and 12" lateral displacements). Vehicle highest 10 msec average decelerations subsequent to instant of hypothetical passenger impact should be less than: 15 g's ((Longitudinal) and 15 g's (Lateral).

3. Vehicle Trajectory
   H. After collision, the vehicle trajectory and final stopping position shall intrude a minimum distance, if at all, into adjacent traffic lanes.

   I. In tests where the vehicle is judged to be redirected into or stopped while in adjacent traffic lanes, vehicle speed change during test article collision should be less than 15 mph and the exit angle from the test article should be less than 60 percent of the test impact angle, both measured at time of vehicle loss of contact with test device.

The formula used to calculate impact severity (IS) is given as follows:

$$IS = \frac{1}{2} m (v \sin\theta)^2$$

where m - vehicle test inertial mass (slugs)

v - impact velocity (fps)

θ - impact angle (deg)

4. TEST RESULTS

4.1. TEST NO. I1-1

Test I1-1 was conducted with an 1,800 lb. Honda Civic under the impact conditions of 56.8 mph and 15 deg. A summary of the tests results is shown in Figure 14.

Upon impact with the bridge rail, the right front wheel of the vehicle collapsed inward allowing the vehicle to begin a clockwise rolling motion toward the bridge rail. The vehicle remained in contact with the bridge rail for approximately 13 ft. after initial impact. The car began to skid on its right side while traveling in a direction essentially parallel to the bridge rail. After the vehicle had traveled past the end of the bridge rail, it began a counterclockwise yaw motion. This yaw motion combined with the rolling motion allowed the vehicle to skid on its right side on the concrete airport apron and begin to roll. The vehicle came to rest 172 ft. from initial point of impact after making two complete rollovers.

Photographs of the vehicle damage are shown in Figure 15. As evident, the vehicle damage was extensive. The TAD and VDI damage classifications are shown in Figure 14. Photographs of the minimal damage to the bridge rail are shown in Figure 16. From the overhead high-speed camera, the dynamic deflection of the upper rail member was determined to be approximately 2 1/4-in. No permanent set had occurred in the lower and upper rail members.

Before vehicle impact with the bridge rail, the coaxial

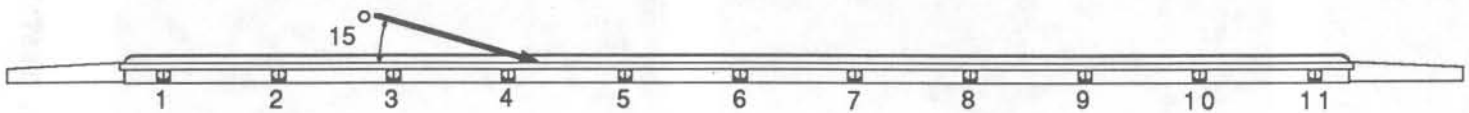

PLAN VIEW

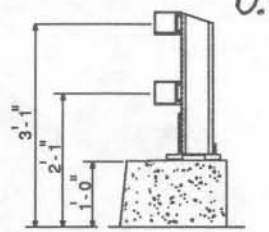

TYPICAL SECTION

Test No. I1-1
Date 8/2/88
Installation
  Drawing No. . . . . Iowa BRF-000S(2)-38-00
  Length (ft) 100
Beam Rail
  Member . . . . . Box-Aluminum
  Length
    Top Rail (ft) 86.83
    Bottom Rail (ft) . . . 86.25
  Maximum Deflections
  Permanent
    Top Rail (in) . . . . . None
    Bottom Rail (in). . . . None
  Dynamic
    Top Rail (in) 2.2
    Bottom Rail (in). . . . 1.0 (est.)
Post
  Material . . . . . Aluminum
  Dimensions and Weight . . W7x7.1
  Spacing (ft) 8.17
Vehicle
  Model . . . . . 1982 Honda Civic
  Weight
    Test Inertia (lb) . . . 1800
    Dummy (lb) 165
    Gross Static (lb) . . . 1965

Vehicle Speed
  Impact (mph) 56.8
  Exit (mph) 47.9
Vehicle Angle
  Impact (deg). 15
  Exit (deg). 4.2
Vehicle Snagging . . . . . None
Vehicle Stability . . . . . Rollover
Occupant Impact Velocity (before rollover)
  Longitudinal (fps). . . . . NA
  Lateral (fps) 8.9
Occupant Ridedown Accelerations
  Longitudinal (g's). . . . . NA
  Lateral (g's) 3.9
Vehicle Damage . . . . . Extensive
  TAD . . . . . 1-RFQ-5,1-LFQ-3,1-R&T-3
  VDI 01FYA03
Vehicle Rebound Distance (ft) 25
Bridge Rail Damage . . . . . Minimal

FIGURE 14. TEST I1-1 SUMMARY AND SEQUENTIAL PHOTOS

FIGURE 15. PHOTOGRAPHS OF VEHICLE DAMAGE, TEST I1-1

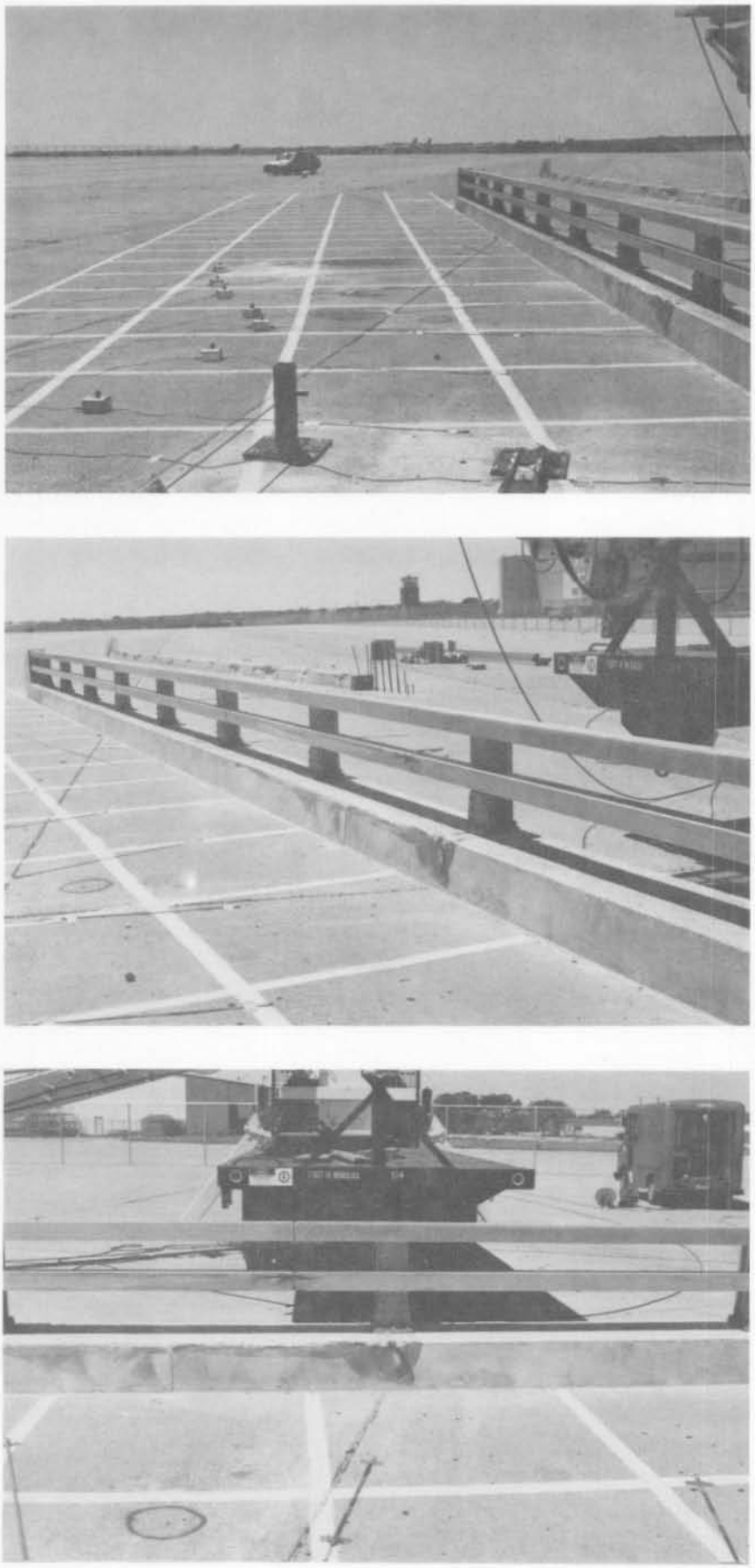

FIGURE 16. PHOTOGRAPHS OF BOX-ALUMINUM BRIDGE RAIL DAMAGE, TEST I1-1

cable over which the multiplexed accelerometer signals are sent to the Honeywell Magnetic Recorder in the central control van had caught on one of the cable guidance stanchions and broke. The occupant risk values shown in Figure 14 were therefore determined from an analyses of the high-speed film before the vehicle had started to yaw and rollover. The calculations of the lateral occupant impact velocity and the lateral occupant ridedown deceleration are presented in Appendix B.

4.2. Test No. I1-2

Test I1-2 was conducted with a 4,310 lb. Cadillac Coupe Deville under the impact conditions of 62.2 mph and 25 degrees. A summary of the test results is shown in Figure 17.

Upon impact with the bridge rail, the right-front corner of the vehicle became wedged between the concrete curb and the lower aluminum bridge rail. The vehicle continued to travel forward until the right front corner and bumper of the vehicle snagged on post No. 8. That, plus the force from the horizontal rail, caused the post with the attached base post assembly to break away from the concrete curb. When the vehicle began to travel past post No. 8, the front section of the vehicle (including the engine portion) buckled to the right. At that stage, the majority of the right-front side had been crunched inward due to the severe snagging. The vehicle continued to travel down the bridge rail to the next rail post (No. 9). At post No. 9, the front bumper finally detached from the car due to snagging. The vehicle then was redirected off the bridge rail after being in contact for approximately 14 ft.

A review of the damage to the car indicates that there was considerable contact of the vehicle's undercarriage against the 12" high concrete curb and considerable damage resulted from this contact.

Photographs of the vehicle damage are shown in Figure 18. As evident, the vehicle damage due to snagging was extensive while considerable undercarriage damage occurred due to contact

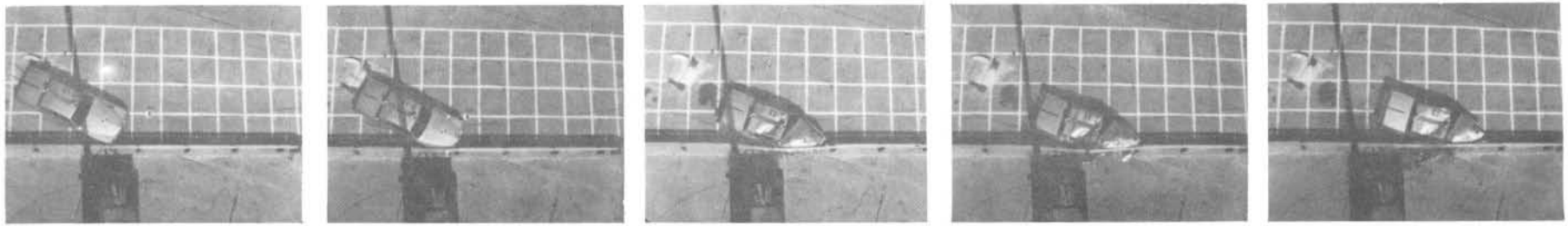

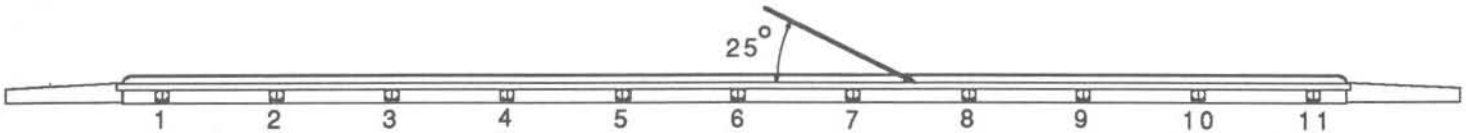

PLAN VIEW

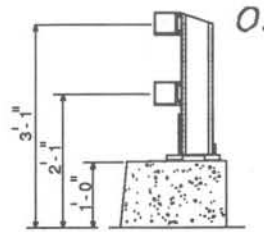

TYPICAL SECTION

Test No I1-2
Date 8/3/88
Installation
  Drawing No. . . . . Iowa BRF-000S(2)-38-00
  Length (ft) 100
Beam Rail
  Member . . . . . Box-Aluminum
  Length
    Top Rail (ft) 86.83
    Bottom Rail 86.25
  Maximum Deflections
    Permanent
    Top Rail (in) . . . . . Lateral - 2.31
                Vertical - 2.69
    Bottom Rail (in) . . . Lateral - 4.0
                Vertical - 3.63
  Dynamic
    Top Rail (in) 7.5
    Bottom Rail (in) . . . 8.0 (est.)
Post
  Material . . . . . Aluminum
  Dimensions and Weight . . W7 x 7.1
  Spacing (ft) 8.17
Vehicle
  Model . . . . . 1982 Cadillac Coupe Deville
  Weight
    Test Inertia (lb) . . . 4310
    Dummy (lb) 165
    Gross Static (lb) . . . 4475

Vehicle Speed
  Impact (mph) 62.2
  Exit (mph) 34.9
Vehicle Angle
  Impact (deg) 25
  Exit (deg) 8.6
Vehicle Snagging . . . . . Severe
Vehicle Stability . . . . . Satisfactory
Occupant Impact Velocity
  Longitudinal (fps) 41.4
  Lateral (fps) 15.6
Occupant Ridedown Accelerations
  Longitudinal (g's) 8.1
  Lateral (g's) 16.2
Vehicle Damage . . . . . Extensive
  TAD 1-FR-7,1-RFQ-7
  VDI 01FFAW2
Vehicle Rebound Distance (ft) 9
Bridge Rail Damage . . . . . Extensive

FIGURE 17. TEST I1-2 SUMMARY AND SEQUENTIAL PHOTOS

FIGURE 18. PHOTOGRAPHS OF VEHICLE DAMAGE, TEST I1-2

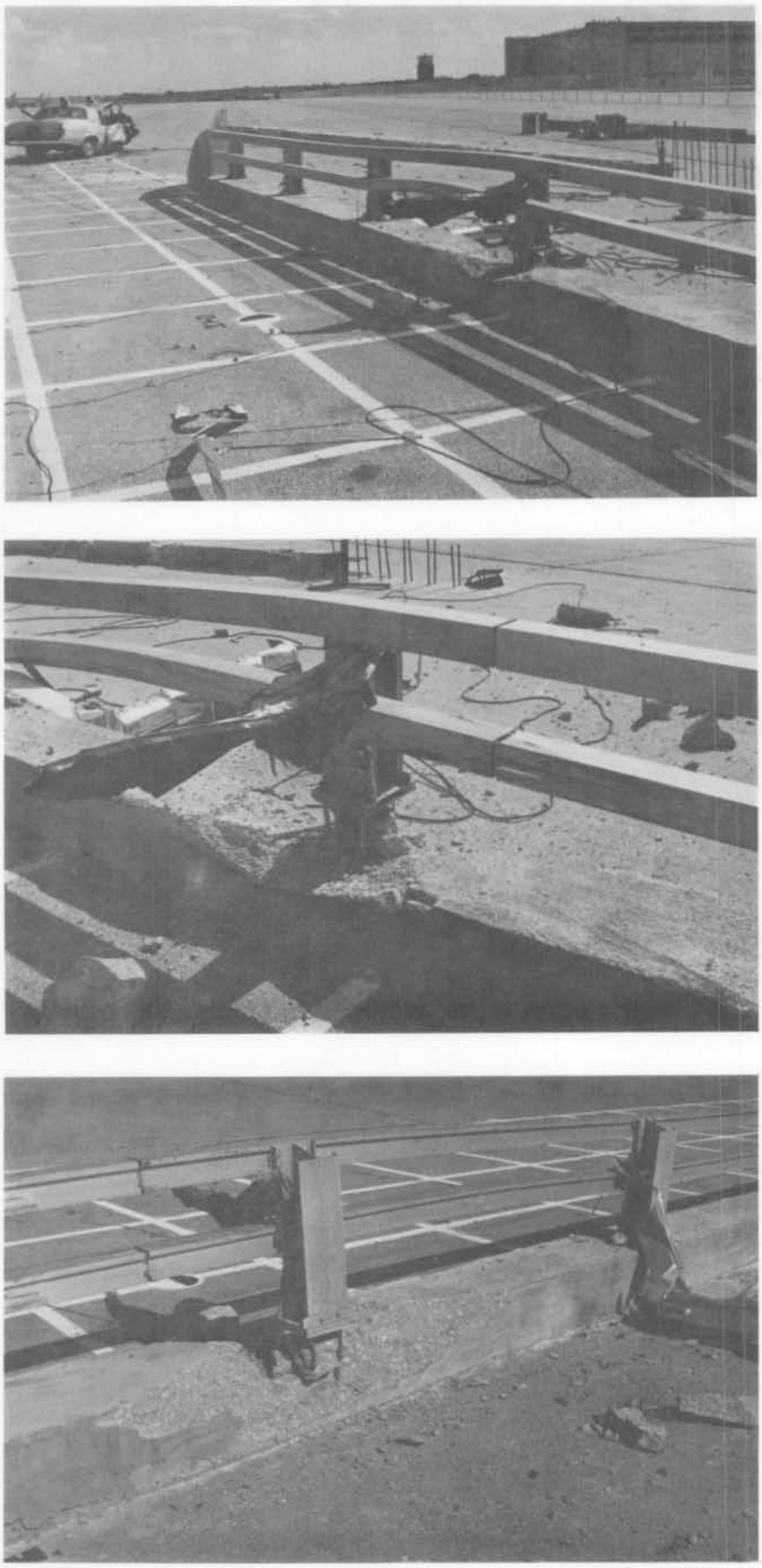

FIGURE 19. PHOTOGRAPHS OF BOX-ALUMINUM BRIDGE RAIL DAMAGE, TEST I1-2

with the concrete curb. The TAD and VDI damage classifications are shown in Figure 17. Photographs of the extensive damage to the bridge rail are shown in Figure 19.

Graphs of longitudinal and lateral deceleration, vehicle change in speed, lateral occupant impact velocity, and longitudinal and lateral occupant displacement versus time are given in Appendix C.

After the test, the permanent set was measured and is shown in Figure 20. The maximum lateral dynamic deflection was 7 1/2-in. as determined from the overhead high-speed camera.

After Test I1-2, it was observed that the placement of the reinforcement steel was improperly placed. The bars misplaced were the top two longitudinal bars, the horizontal bent No. 6 bar, and the vertical dowels which were bent off too short. Thus, it created 3 1/2-in. of concrete cover. A sketch of the misplaced curb reinforcement steel is shown in Figure 21.

The Civil Engineering Department at the University of Nebraska and the IDOT felt that this apparent misplacement of the steel did not effect the testing, see Appendix D.

46 1513

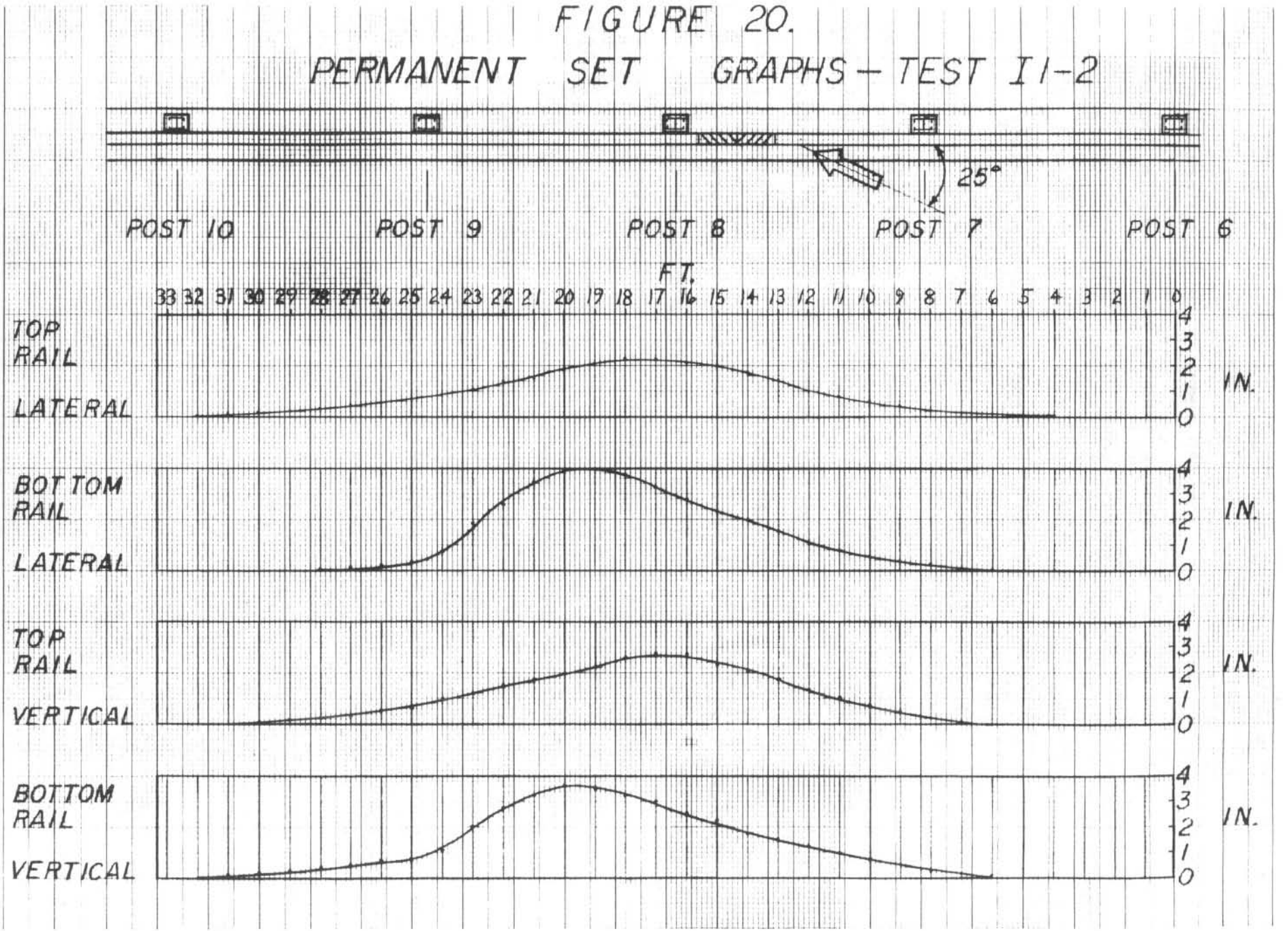
FIGURE 20.
PERMANENT SET GRAPHS – TEST II-2
25°
POST 10
POST 9
POST 8
POST 7
POST 6
FT.
33 32 31 30 29 28 27 26 25 24 23 22 21 20 19 18 17 16 15 14 13 12 11 10 9 8 7 6 5 4 3 2 1 0
TOP RAIL LATERAL
BOTTOM RAIL LATERAL
TOP RAIL VERTICAL
BOTTOM RAIL VERTICAL
IN.
4 3 2 1 0

FIGURE 21.
Sketch Of Reinforcement Steel For Task 1

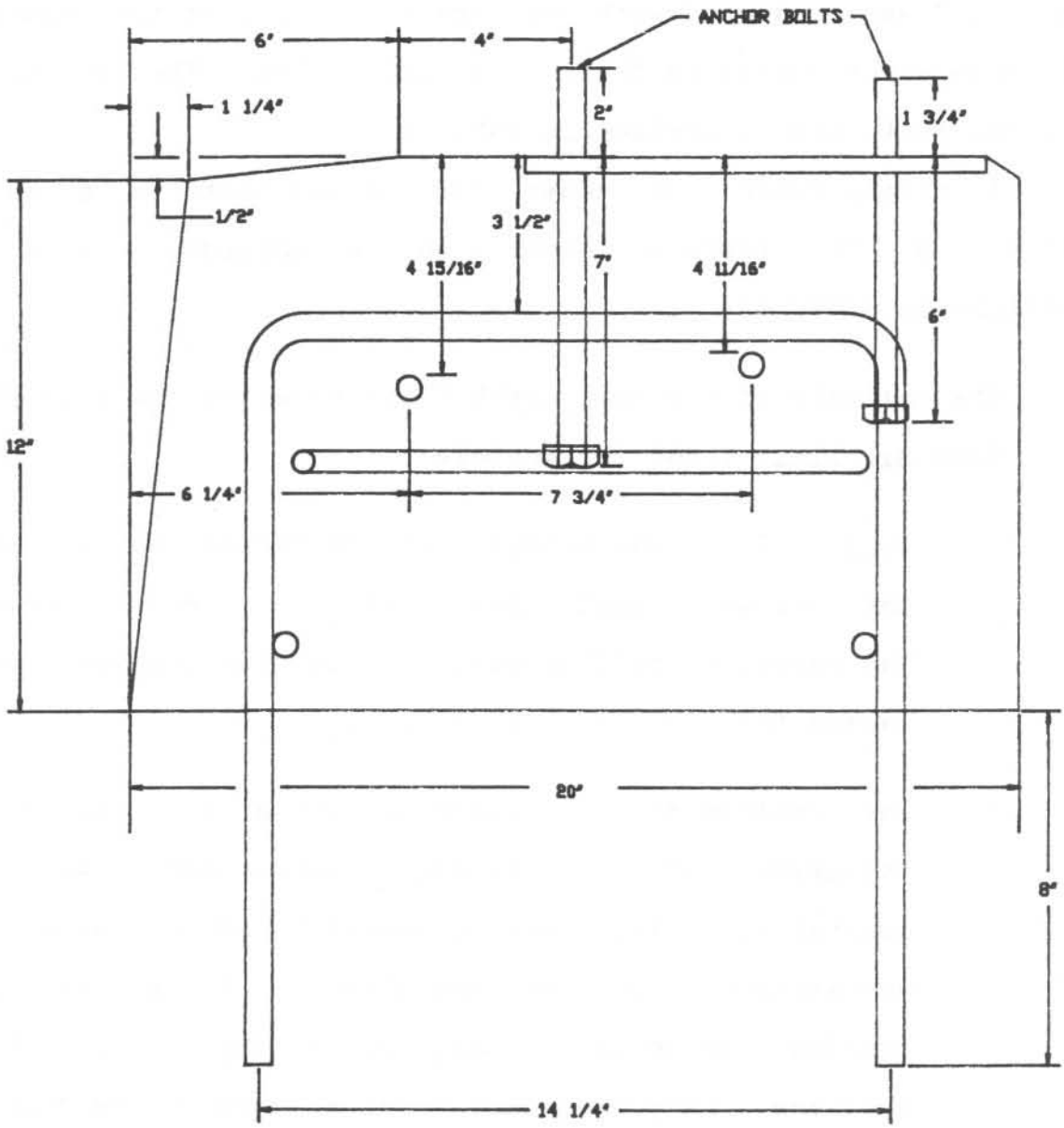

Note: This is the actual location of the rebar which differs from the original construction plans.

SCALE: 1"=4"

5. CONCLUSIONS

Two full-scale crash tests were conducted to evaluate the safety performance of the Iowa Box-Aluminum Bridge Rail. Test I1-1 was conducted with the impact location at a rail splice. Test I1-2 was conducted with the impact location at the center of the span which contained the second rail splice. The results of the two tests are summarized in Table 2.

A safety evaluation summary for the two tests is given in Table 3. The tests were evaluated in accordance with the criteria in NCHRP 230 (1).

The analysis of the two crash tests revealed the following:

Test No. I1-1: 1,800 lb. vehicle

1. In Test I1-1, the bridge rail redirected the vehicle at the allowable angle, but it was not a smooth result. The excessive rolling motion along with the yaw motion caused the vehicle to roll twice.

2. The vehicle did not remain upright at all times. The integrity of the passenger compartment was not maintained. There was deformation and intrusion. The unrestrained occupant was observed to be partially hanging outside of the passenger window during vehicle rollover. Many deep cuts were observed on the dummy.

Table 2
SUMMARY OF TEST RESULTS

Test Item			Test No.	
			I1-1	I1-2
Vehicle Weight (lb)			1800(1750-1850)[2]	4310(4300-4700)[2]
Vehicle Speed (mph)		Impact	56.8 (60)[2]	62.2 (60)[2]
		Exit	47.9	34.9
Vehicle Angle (deg)		Impact	15 (15)[2]	25 (25)[2]
		Exit	4.2	8.6
Actual Impact Severity (ft-kips)			13.0 (12-16)[1]	99.9 (88-114)[1]
Vehicle Rebound Distance (ft)			25	9
Vehicle Damage		TAD	1-RFQ-5,1-LFQ-3, 1-R&T-3	1-FR-7,1-RFQ-7
		VDI	01FYA03	01FFAW2
Occupant Impact Velocity (fps)	Longitudinal		NA (30)[3]	41.4 (30)[3]
	Lateral		8.9[4] (20)[3]	15.6 (20)[3]
Vehicle Highest 0.010 sec Average Deceleration (g's) (Occupant Ride-down Deceleration)	Longitudinal		NA (15)[3]	8.1 (15)[3]
	Lateral		3.9[4] (15)[3]	16.2 (15)[3]
Did Snagging Occur?			No	Yes
Did Car Rollover Occur?			Yes (Twice)	No

[1] allowable range of values
[2] target values
[3] maximum allowable values
[4] values determined from high-speed film analysis without consideration of rolling motion
NA - Not Available: Occupant unable to travel 24 inches in longitudinal direction before rolling of vehicle occurred.

Table 3
SAFETY EVALUATION SUMMARY

Evaluation Factors	Evaluation Criteria	Test No. I1-1	Test No. I1-2
Structural Adequacy	A. Test article shall smoothly redirect vehicle; the vehicle shall not penetrate or go over the installation although controlled lateral deflection of the test vehicle is acceptable.	U	U
	D. Detached elements, fragments, or other debris from the test article shall not penetrate or show potential for penetrating the passenger compartment or present undue hazard to other traffic.	S	U
Occupant Risk	E. The vehicle shall remain upright during and after collision although moderate roll, pitching, and yawing are acceptable. Integrity of the passenger compartment must be maintained with essentially no deformation or intrusion.	U	U
	F. Impact velocity of front seat occupant against vehicle interior shall be less than 30 fps (Longitudinal) and 20 fps (Lateral). (Calculated at 24" forward and 12" lateral displacements). Vehicle highest 10 msec average decelerations subsequent to instant of hypothetical passenger impact should be less than: 15 g's (Longitudinal) and 15 g's (Lateral).	S	NR
Vehicle Trajectory	H. After collision, the vehicle trajectory and final stopping position shall intrude a minimum distance, if at all, into adjacent traffic lanes.	U	S
	I. In tests where the vehicle is judged to be redirected into or stopped while in adjacent traffic lanes, vehicle speed change during test article collision should be less than 15 mph and the exit angle from the test article should be less than 60 percent of the test impact angle, both measured at time of vehicle loss of contact with test device.	S	NA

S - Satisfactory U - Unsatisfactory NR - Not Required
M Marginal NA - Not Applicable

3. The vehicle trajectory and final stopping distance, intruded into the adjacent lane. This would pose a hazard to oncoming traffic.

4. The actual impact severity was within the recommended limits. The test was taken to be valid.

Test No. I 1-2: 4,310 lb. vehicle

1. The vehicle was not smoothly redirected. Severe vehicle snagging occurred while the right front portion of the vehicle was in contact with the two box-aluminum rails and also with the aluminum posts.

2. Post No. 8 and the attached rail broke away from the concrete curb.

3. The integrity of the passenger compartment was not maintained. There was deformation and intrusion. The dummy received a serious injury when its right leg was detached from the torso.

4. For Test I1-2, the accelerometer data used for occupant risk is not required, but it is presented for added information purposes. It is noted that the longitudinal impact velocity and the lateral occupant ridedown deceleration do not meet the suggested criteria.

5. The actual impact severity was within the recommended

6. REFERENCES

1. "Recommended Procedures for the Safety Performance Evaluation of Highway Appurtenances," National Cooperative Highway Research Program Report 230, Transportation Research Board, Washington, D.C., March 1981.

2. Hinch, J., Yang, T-L, and Owings, R., "Guidance Systems for Vehicle Testing," ENSCO, Inc., Springfield, VA, 1986.

3. "Vehicle Damage Scale for Traffic Accident Investigators," Traffic Accident Data Project Technical Bulletin No. 1, National Safety Council, Chicago, Ill., 1971.

4. "Collision Deformation Classification, Recommended Practice J224 Mar 80," SAE Handbook Vol. 4, Society of Automotive Engineers, Warrendale, Penn., 1985.

7. APPENDICES

APPENDIX A.

CONCRETE COMPRESSIVE STRENGTHS AND DESIGN MIX

MT-519 L
C C
9-76

STATE OF NEBRASKA
DEPARTMENT OF ROADS

Project ORF-0005(2)-38-00

SUMMARY OF COMPRESSIVE STRENGTH TEST DATA FOR
PORTLAND CEMENT CONCRETE CYLINDERS

Project | County | Name of Road | Project Engineer | General Contractor | Group of Work

Cement: Brand & Type Lone Star III Mill Bonner Springs, KS

Class of Concrete _____ Admixture Protex AEA & PRO-KRETE

Producer: Fine Agg. Western S & G Pit Location Ashland, Nebraska

Producer: Coarse Agg. Kerford Quarry Location Weeping Water, Neb

LINCOLN Laboratory Sheet No. _____

Lab. Ident. CC	Field Ident.	Represents Concrete For: Station	Water lbs./lb.	% Air Voids	Method of Cure (Struct.)	Date Made 19	Date Rec'd 19	Compressive Strength, psi Age	Age	Age	Age A	Age B	Remarks
504	2A-C	Bridge Curb (7-13-88)						/	7/4704	10/5217	14/4972	28/6087	
526	3A-C	End Posts (7-14-88)						/	7/4420	/	14/5560	28/5800	
								/	/	/	/	/	
								/	/	/	/	/	
								/	/	/	/	/	
								/	/	/	/	/	
								/	/	/	/	/	
								/	/	/	/	/	
								/	/	/	/	/	
								/	/	/	/	/	
								/	/	/	/	/	
								/	/	/	/	/	
								/	/	/	/	/	
								/	/	/	/	/	
								/	/	/	/	/	
								/	/	/	/	/	

FIGURE A-1. CONCRETE COMPRESSIVE STRENGTHS

FOR Materials & Tests Division

MIX DESIGN FOR IOWA PROJECT

PROTECTION BARRIERS

Class "47-B-PHE" Mix

Fine Agg	Coarse Agg	Cement	Water	Air
1477#	1477#	705#	289#	3.0%

w/c = 0.41

Fine Agg	=	1477 lb.	=	9.0343 ft^3
Coarse Agg	=	1477 lb.	=	8.9320 ft^3
Cement	=	705 lb.	=	3.5867 ft^3
Water	=	289 lb.	=	4.6314 ft^3
Air	=	3.0%	=	0.8100 ft^3
				26.9944 ft^3

Fine Agg. Sp. Grav. = 2.62

Coarse Agg. Sp. Grav. = 2.65

Cement Sp. Grav. = 3.15

FIGURE A-2. CONCRETE DESIGN MIX

APPENDIX B.

OCCUPANT RISK DETERMINATION

Figure B-1

Calculation of Occupant Impact Velocity and Ridedown Deceleration

Test No. I1-1

Occupant Impact: traveled 12 in. laterally at 97msec

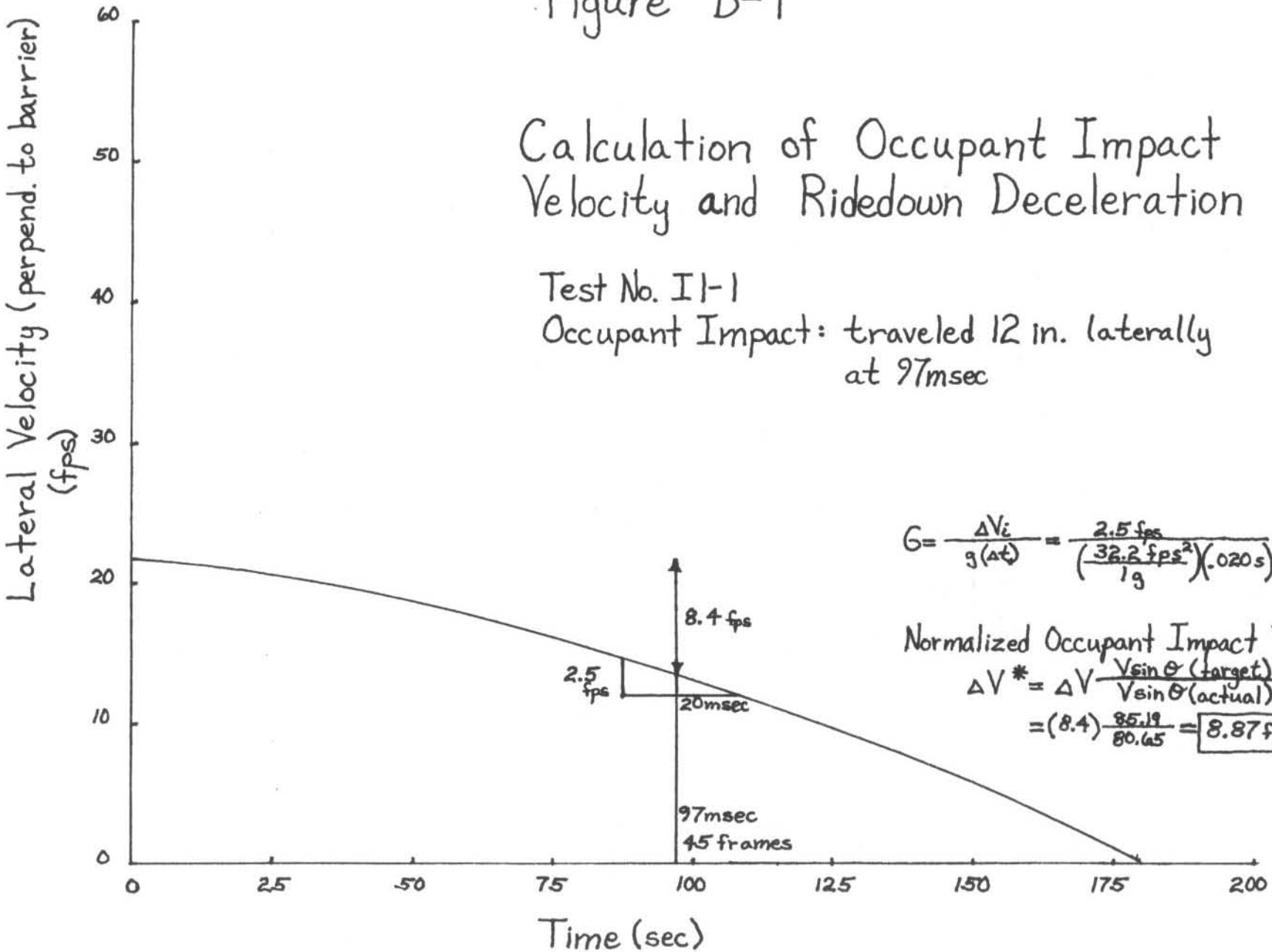

$$G = \frac{\Delta V_i}{g(\Delta t)} = \frac{2.5\ \text{fps}}{\left(\frac{32.2\ \text{fps}^2}{1g}\right)(.020\ \text{s})} = \boxed{3.88\ g's}$$

Normalized Occupant Impact Velocity:

$$\Delta V^* = \Delta V \frac{V\sin\theta\,(\text{target})}{V\sin\theta\,(\text{actual})}$$

$$= (8.4)\frac{85.19}{80.65} = \boxed{8.87\ \text{fps}}$$

APPENDIX C.

ACCELEROMETER DATA ANALYSIS

C-1. Graph of Longitudinal Deceleration, Test I1-2 49

C-2. Graph of Longitudinal Deceleration, Test I1-2 50

C-3. Graph of Vehicle Change in Speed, Test I1-2 51

C-4. Graph of Vehicle Change in Speed, Test I1-2 52

C-5. Graph of Longitudinal Occupant Displacement, Test I1-2 . 53

C-6. Graph of Longitudinal Occupant Displacement, Test I1-2 . 54

C-7. Graph of Lateral Deceleration, Test I1-2 55

C-8. Graph of Lateral Deceleration, Test I1-2 56

C-9. Graph of Lateral Occupant Impact Velocity, Test I1-2 . . 57

C-10. Graph of Lateral Occupant Impact Velocity, Test I1-2 . . 58

C-11. Graph of Lateral Occupant Displacement, Test I1-2 . . . 59

C-12. Graph of Lateral Occupant Displacement, Test I1-2 . . . 60

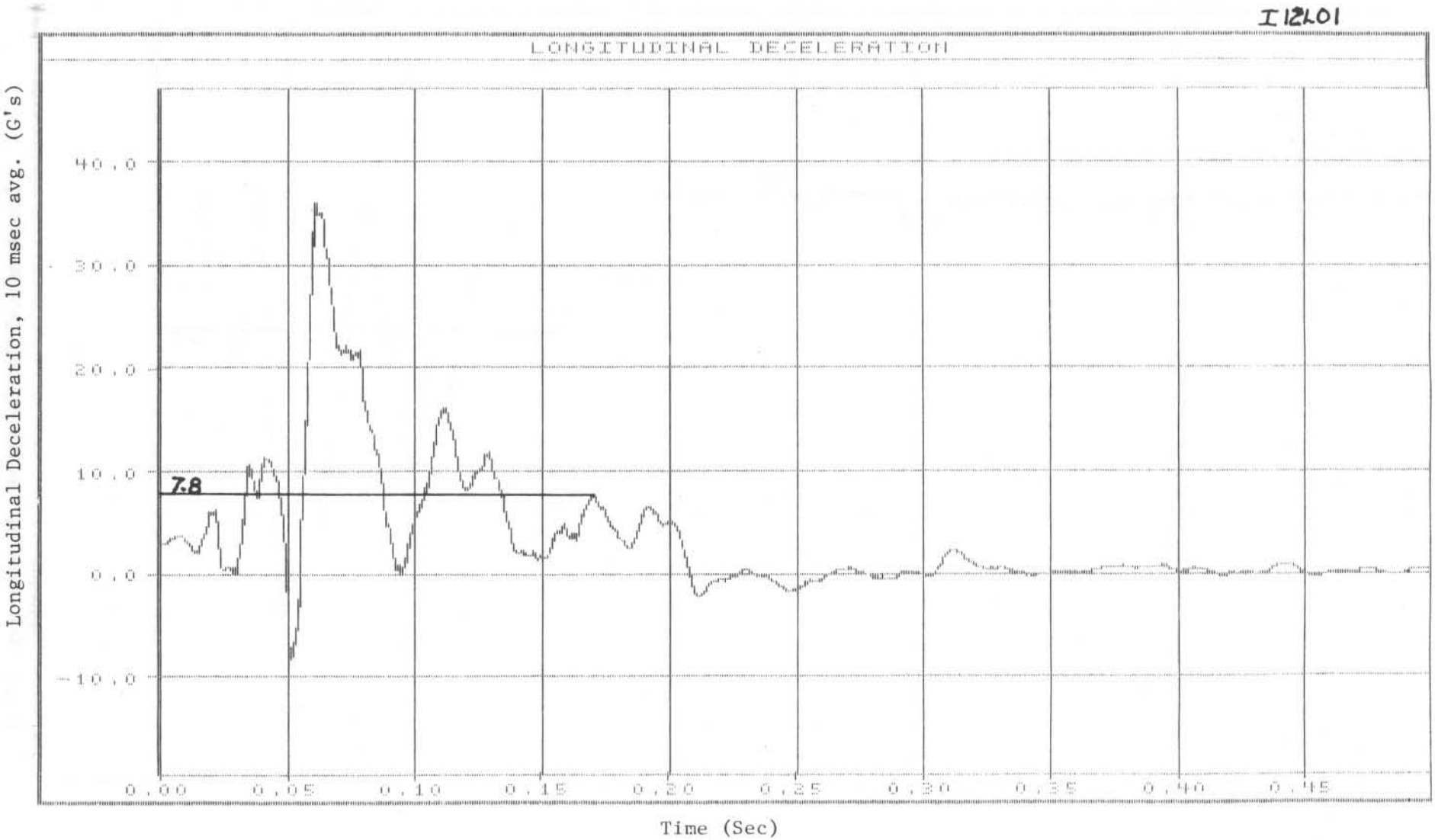

FIGURE C-1. GRAPH OF LONGITUDINAL DECELERATION, TEST 11-2

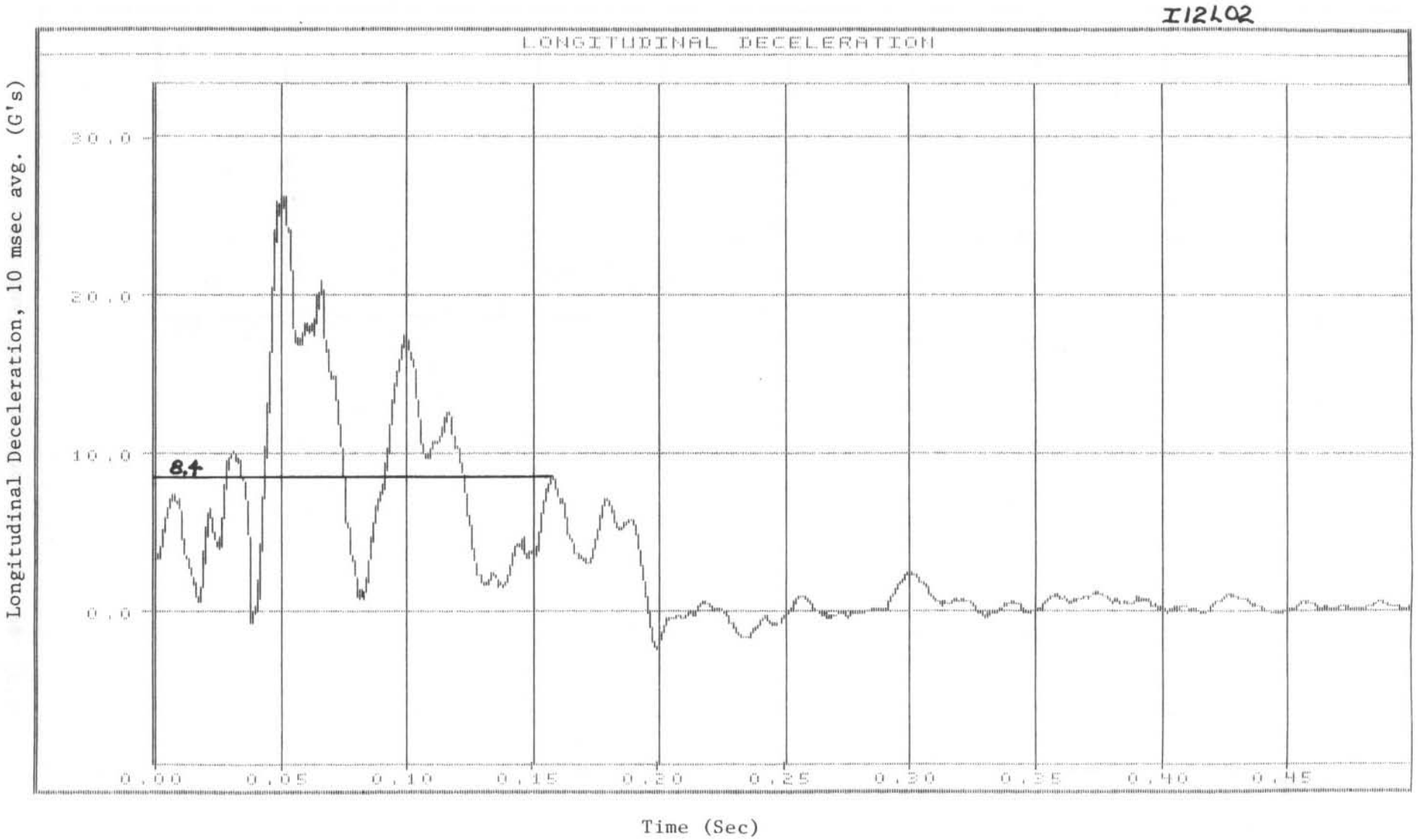

FIGURE C-2. GRAPH OF LONGITUDINAL DECELERATION, TEST 11-2

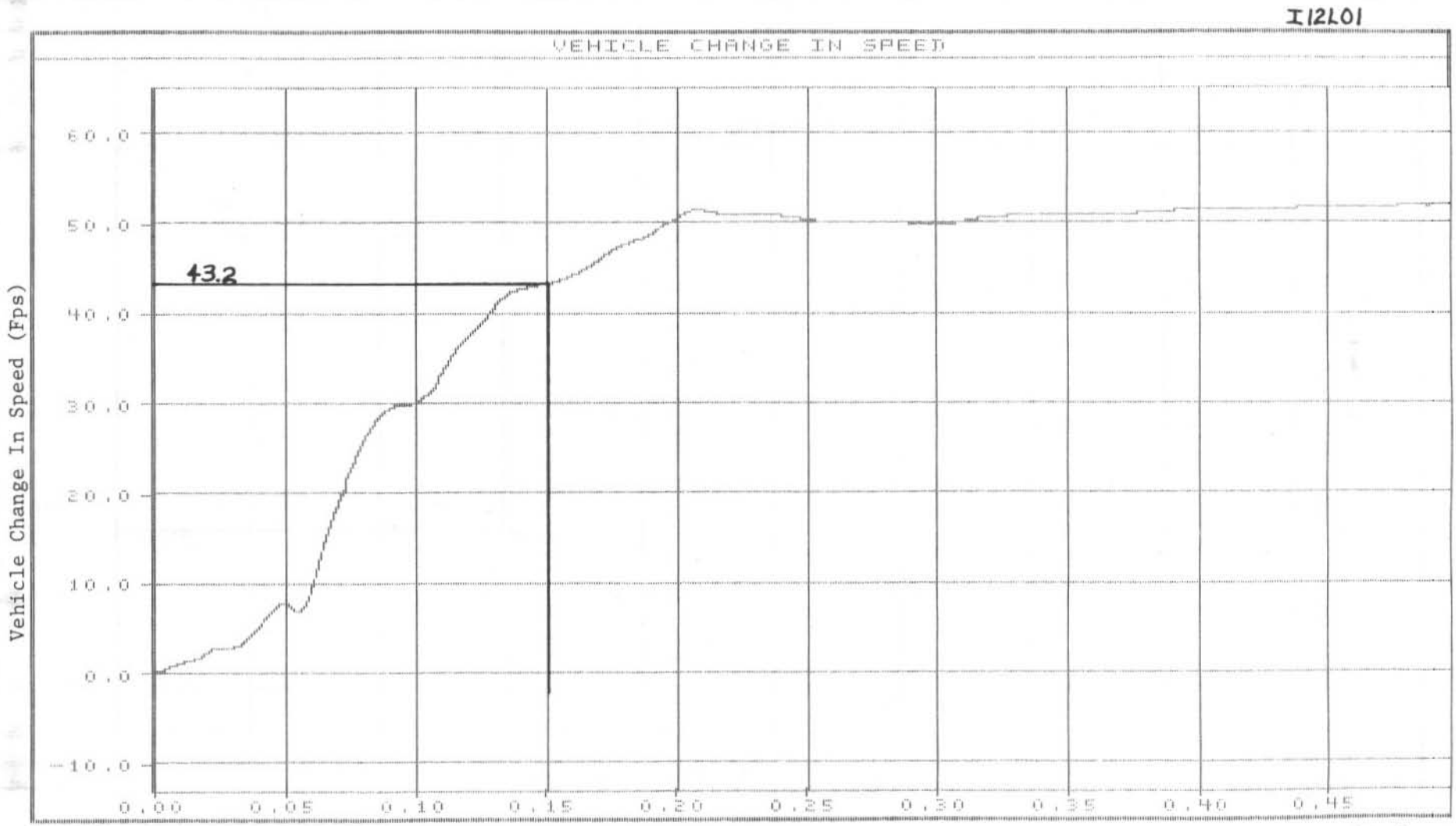

Normalized Occupant Impact Velocity $(\Delta V)^{*} = (\Delta V) \dfrac{(V \sin\theta)\ \text{target}}{(V \sin\theta)\ \text{actual}} = (43.2\ \text{fps}) \dfrac{(88.2\ \text{fps})}{(91.4\ \text{fps})} = 41.7\text{fps}$

FIGURE C-3. GRAPH OF VEHICLE CHANGE IN SPEED, TEST I1-2

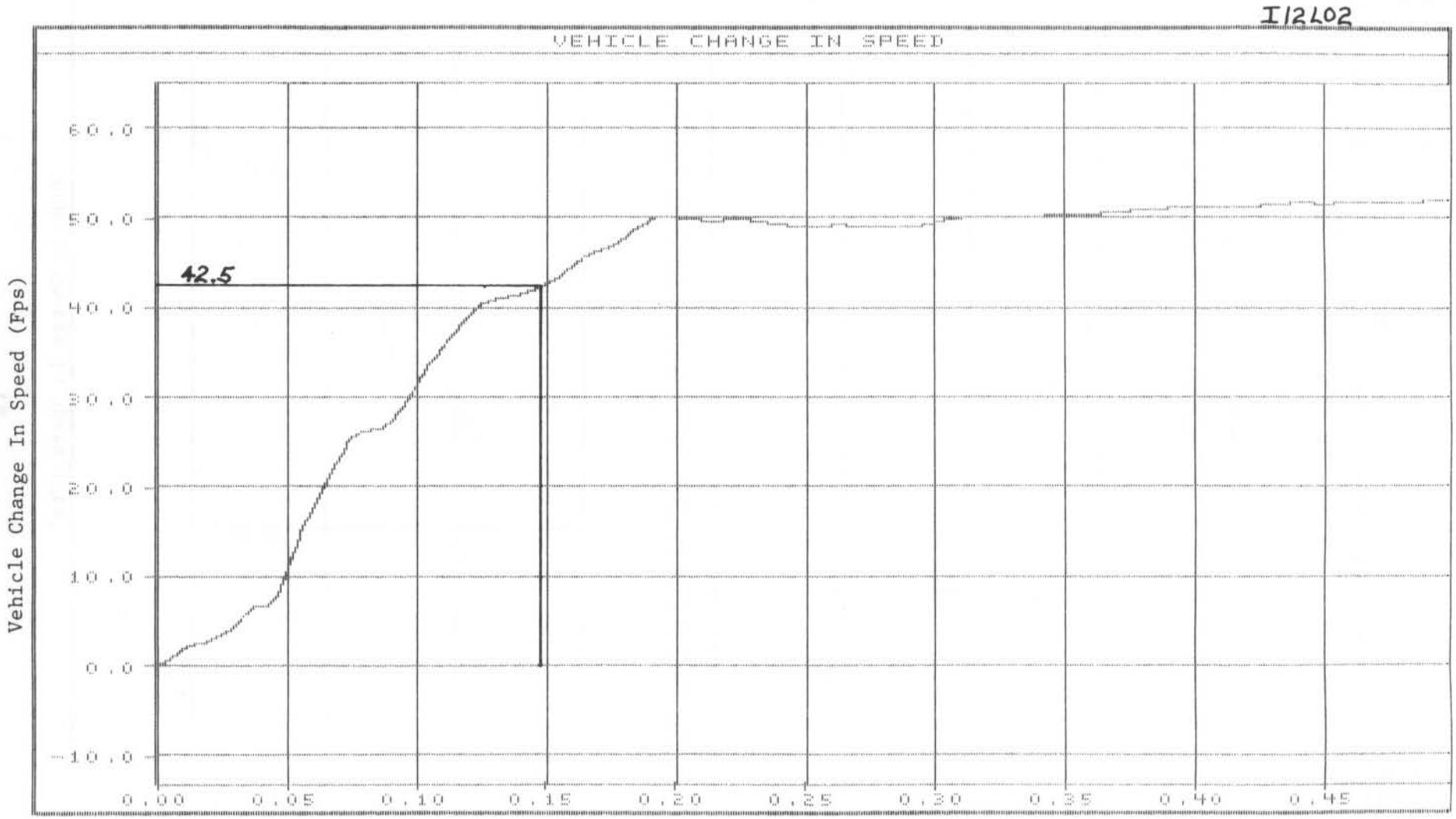

Normalized Occupant Impact Velocity $(\Delta V)^* = (42.5 \text{ fps}) \dfrac{(88.2 \text{ fps})}{(91.4 \text{ fps})} = 41.0 \text{fps}$

FIGURE C-4. GRAPH OF VEHICLE CHANGE IN SPEED, TEST I1-2

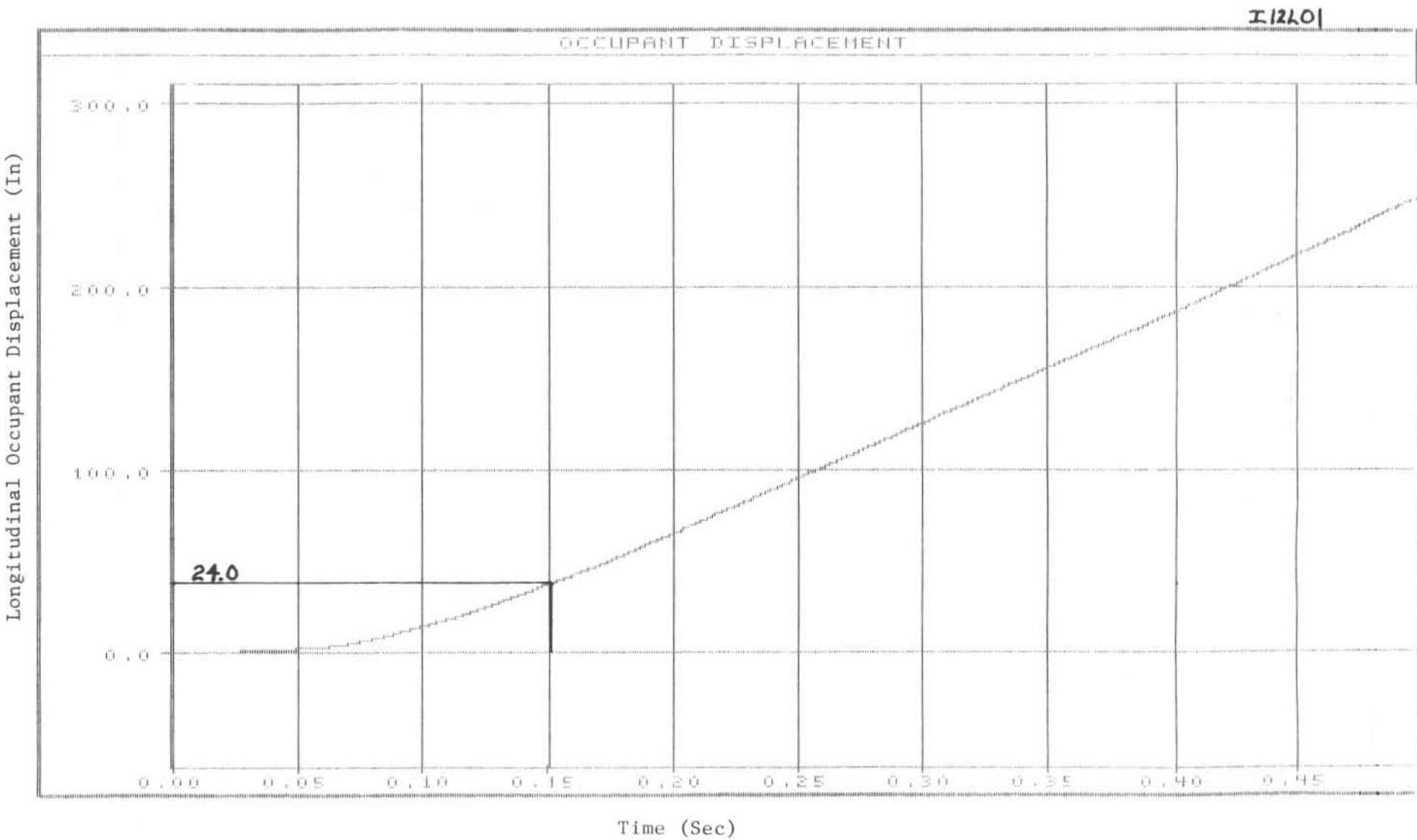

FIGURE C-5. GRAPH OF LONGITUDINAL OCCUPANT DISPLACEMENT, TEST I1-2

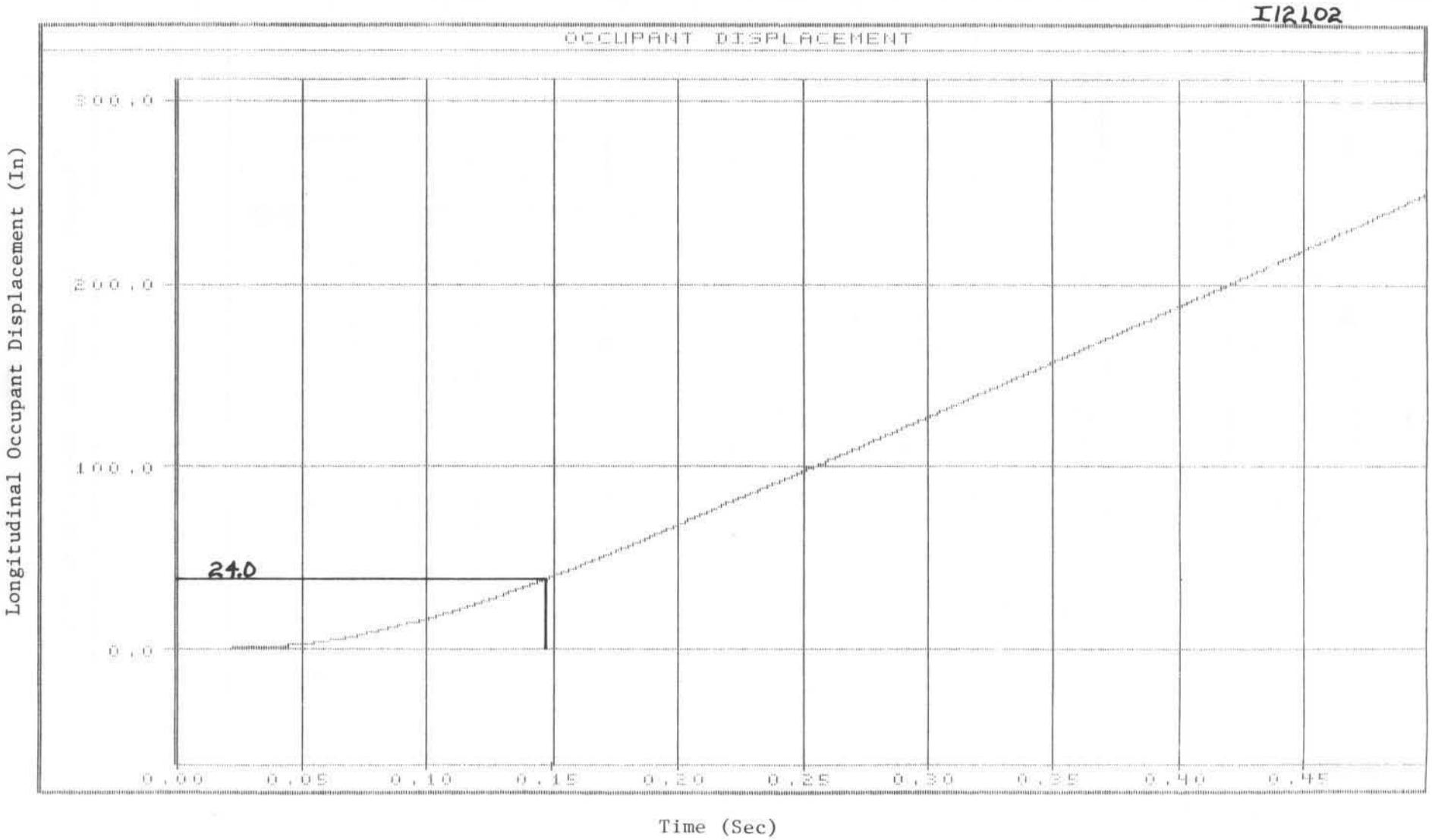

FIGURE C-6. GRAPH OF LONGITUDINAL OCCUPANT DISPLACEMENT, TEST I-2

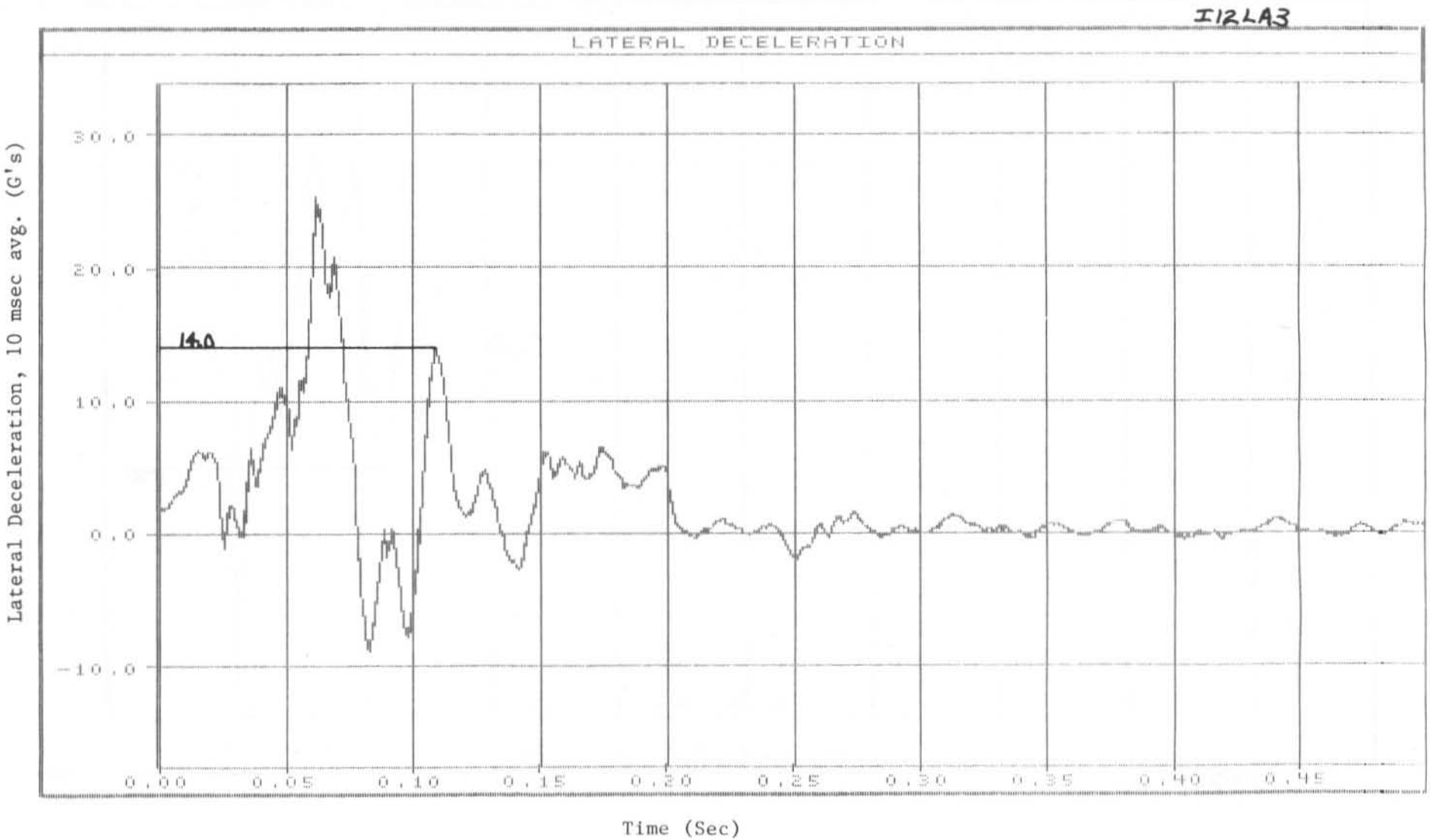

FIGURE C-7. GRAPH OF LATERAL DECELERATION, TEST I1-2

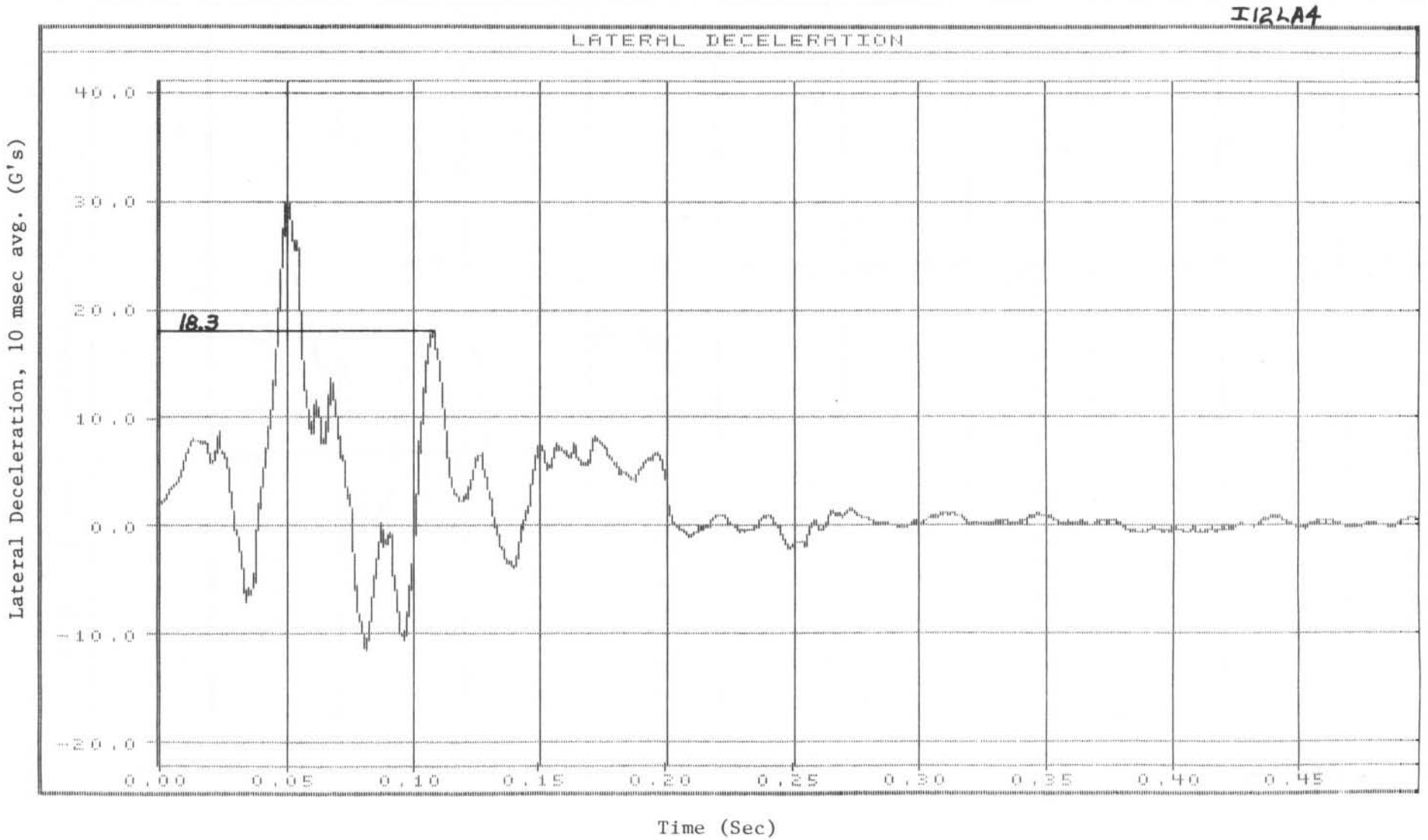

FIGURE C-8. GRAPH OF LATERAL DECELERATION, TEST I1-2

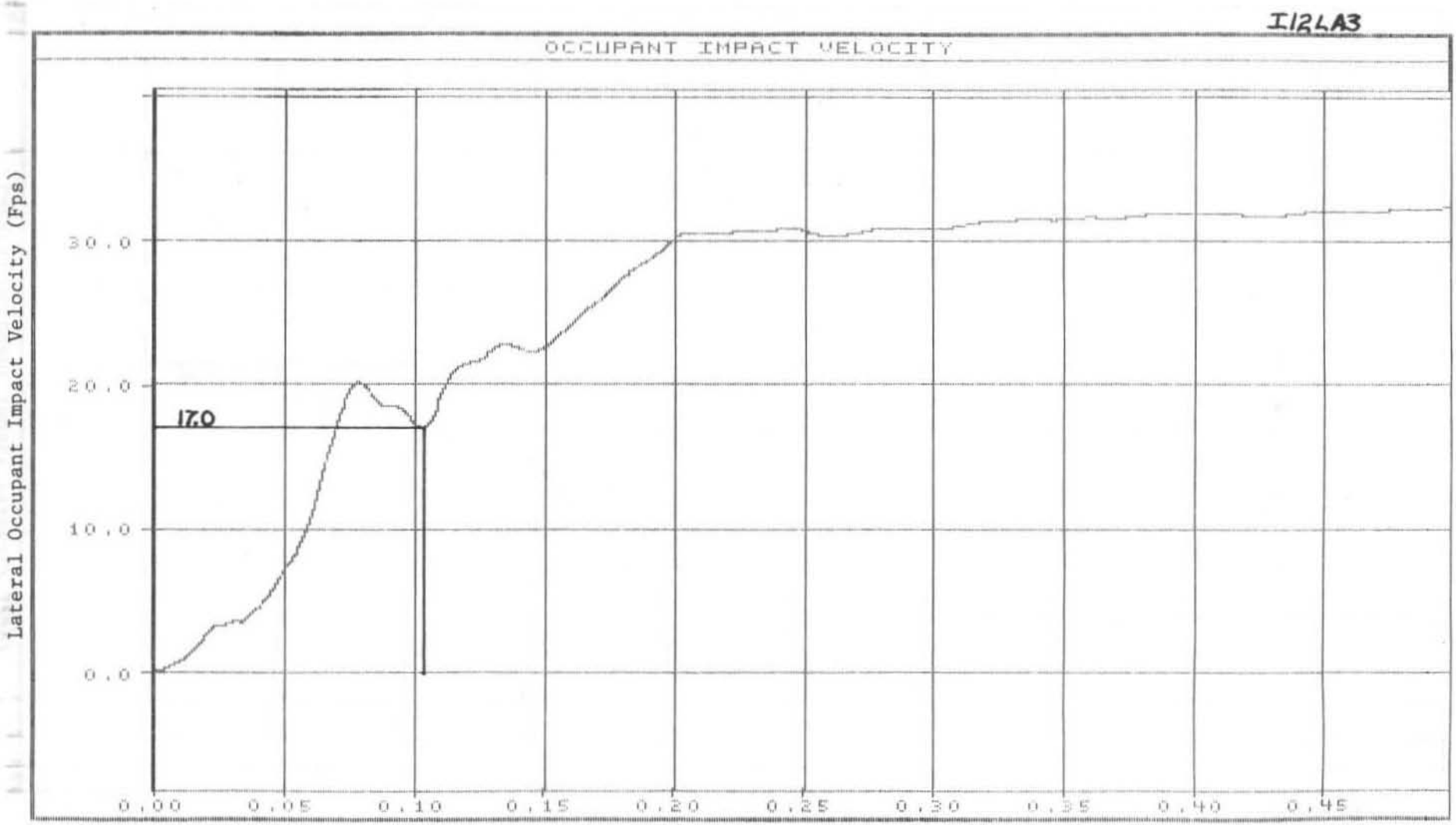

Normalized Occupant Impact Velocity $(\Delta V)^{*} = (17.0 \text{ fps}) \dfrac{(88.2 \text{ fps})}{(91.4 \text{ fps})} = 16.4 \text{fps}$

FIGURE C-9. GRAPH OF LATERAL OCCUPANT IMPACT VELOCITY, TEST I1-2

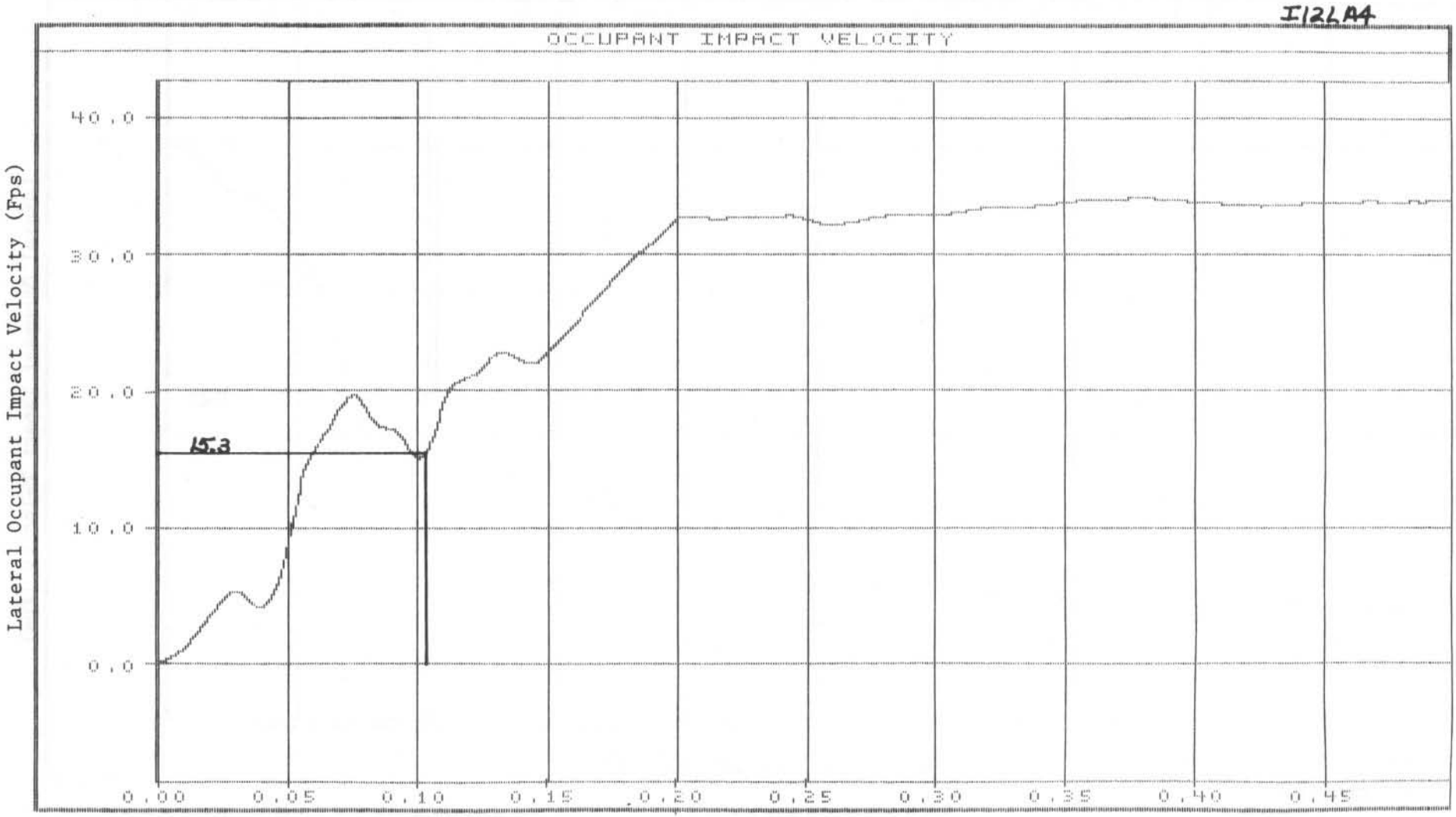

Normalized Occupant Impact Velocity $(\Delta V)^{*} = (15.3 \text{ fps}) \dfrac{(88.2 \text{ fps})}{(91.4 \text{ fps})} = 14.8 \text{fps}$

FIGURE C-10. GRAPH OF LATERAL OCCUPANT IMPACT VELOCITY, TEST I1-2

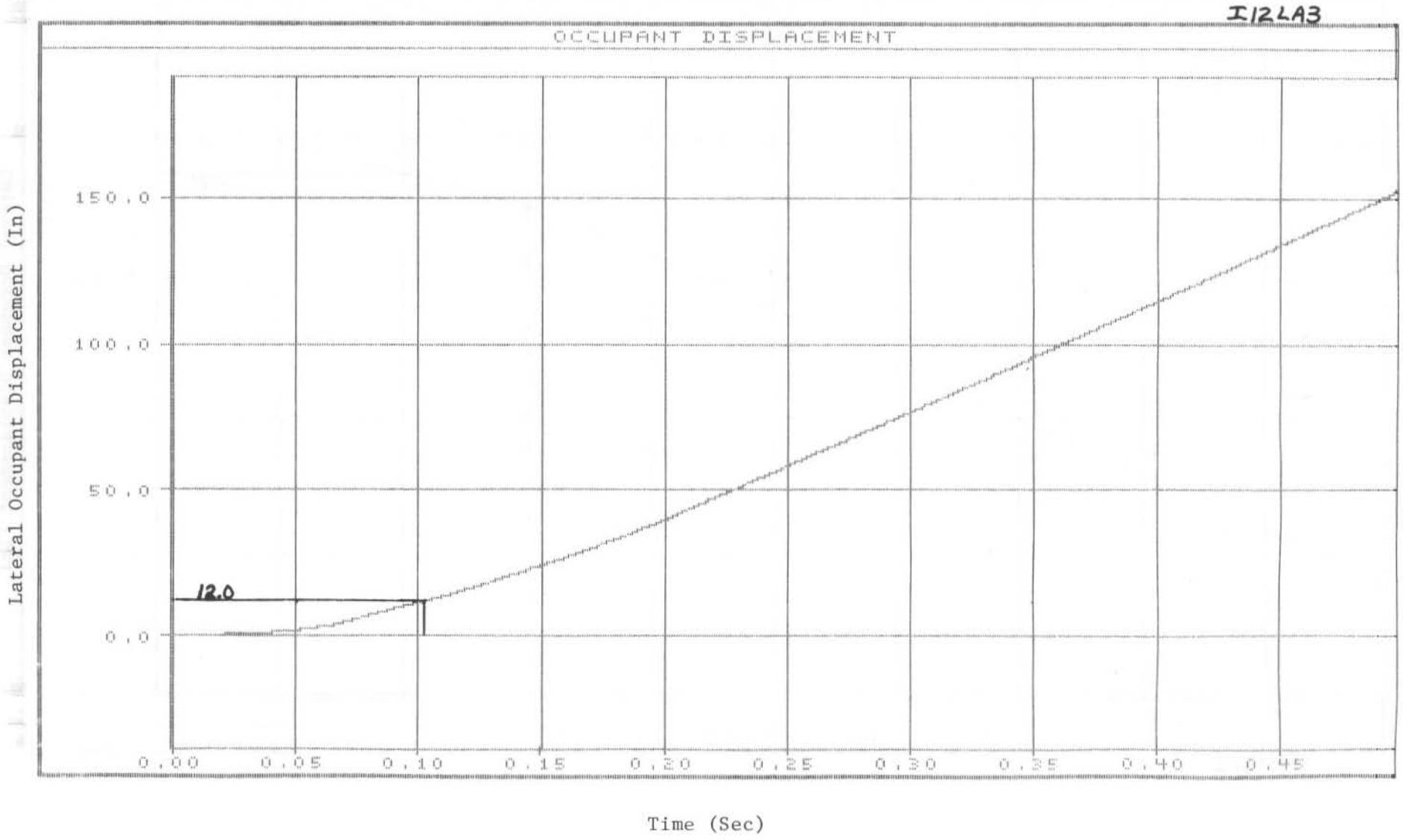

FIGURE C-11. GRAPH OF LATERAL OCCUPANT DISPLACEMENT, TEST I1-2

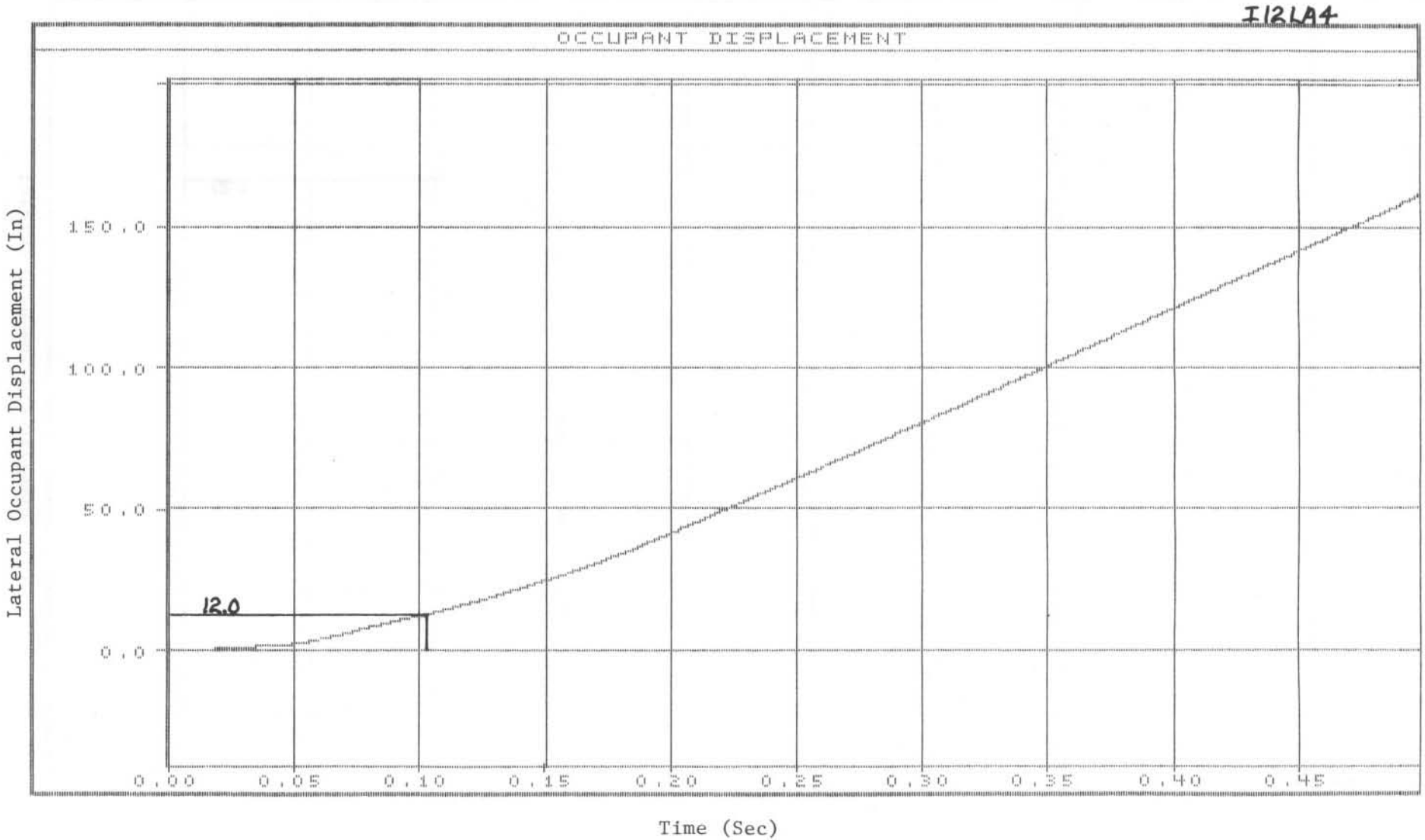

FIGURE C-12. GRAPH OF LATERAL OCCUPANT DISPLACEMENT, TEST I1-2

APPENDIX D.

RELEVANT IDOT CORRESPONDENCE

This memo is to advise you that, based on the tests run previously, no further testing of the box-aluminum rail system (Task I) is required. You may proceed to remove that rail system and construct the concrete retrofit wall in preparation for the testing required for Task II.

The Iowa Department of Transportation and FHWA have agreed that the vehicles used in Task II be as follows:

Vehicle (lb)	Speed (mph)	Impact Angle (degrees)
1800	60	20
5400 (pickup)	60	20

Also, construction details shall be as listed in my memo of August 31, 1988.

Inspection of the damage to the rail and curb section due to Task I testing indicated that all of the reinforcing bars for the curb were not placed in accordance with the plan.

Sincerely,

William A. Lundquist
Bridge Engineer

WAL:dlt
cc: R. Humphrey, G. Anderson
B. Brown, G. Sisson
B. Brakke, FHWA